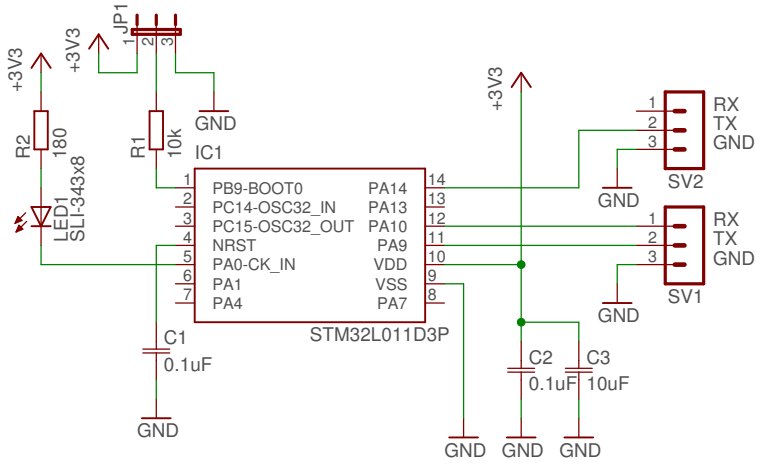


This work is licensed under the Creative Commons Attribution-ShareAlike 4.0 International License.
To view a copy of this license, visit http://creativecommons.org/licenses/by-sa/4.0/.

STM32L011D3P

MPC Research Ltd.

Design: Toshiaki Yoshida

lpuart

11/12/16 5:51 PM

Sheet: 1/1