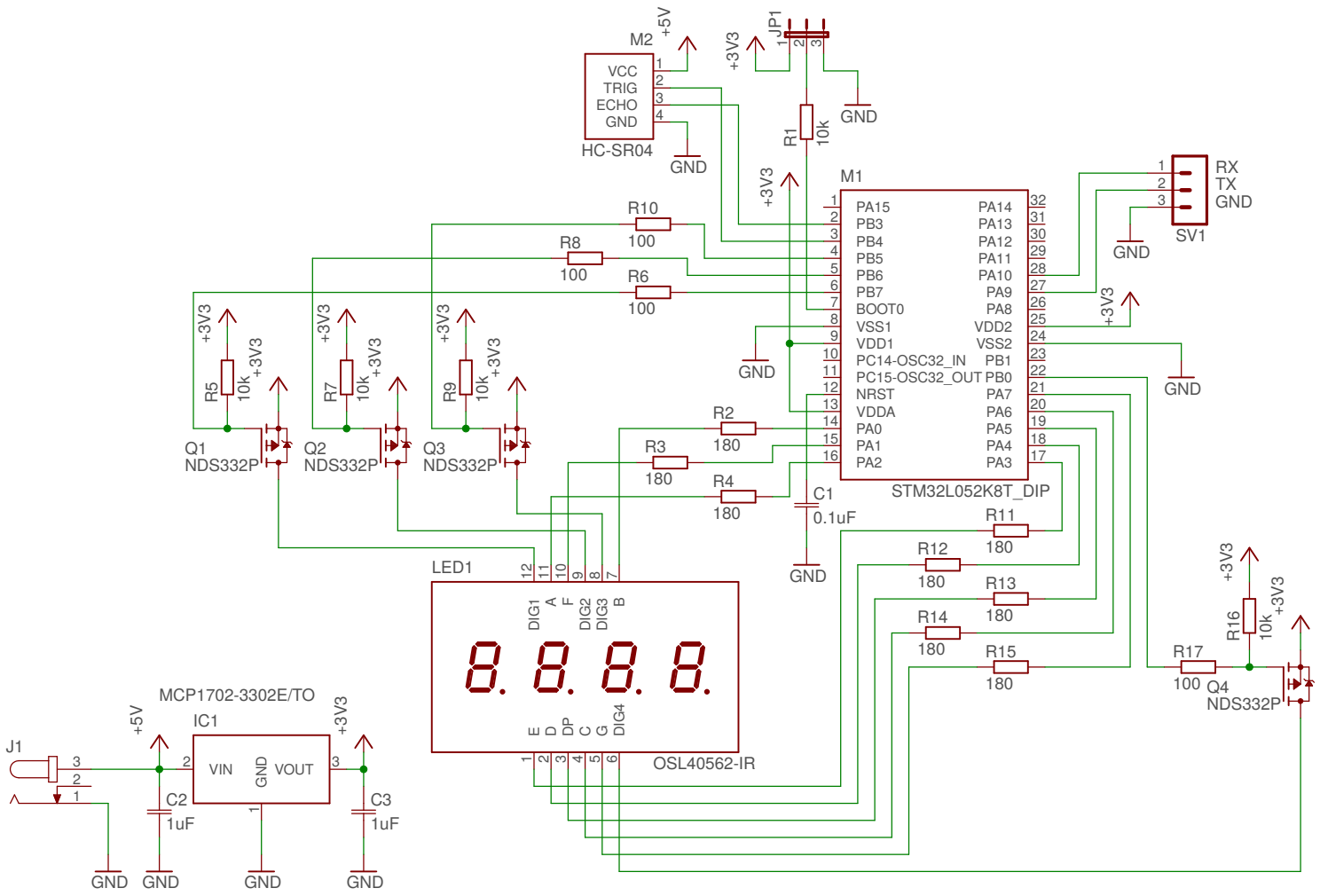

This work is licensed under the Creative Commons Attribution-ShareAlike 4.0 International License.
To view a copy of this license, visit http://creativecommons.org/licenses/by-sa/4.0/.

STM32L052K8T	Design: Toshiaki Yoshida
	ultrasonic_sensor
	8/14/17 9:34 AM
MPC Research Ltd.	Sheet: 1/1