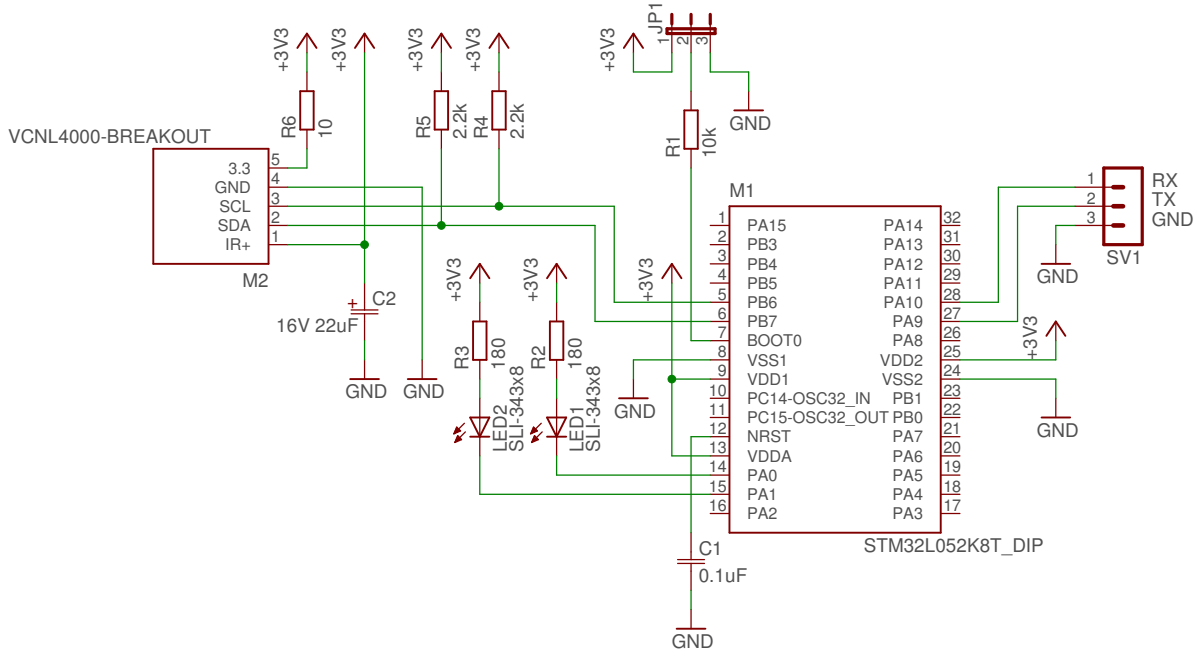

This work is licensed under the Creative Commons Attribution-ShareAlike 4.0 International License.
To view a copy of this license, visit http://creativecommons.org/licenses/by-sa/4.0/.

STM32L052K8T

MPC Research Ltd.

Design: Toshiaki Yoshida

i2c_proximity

11/14/16 9:01 AM

Sheet: 1/1