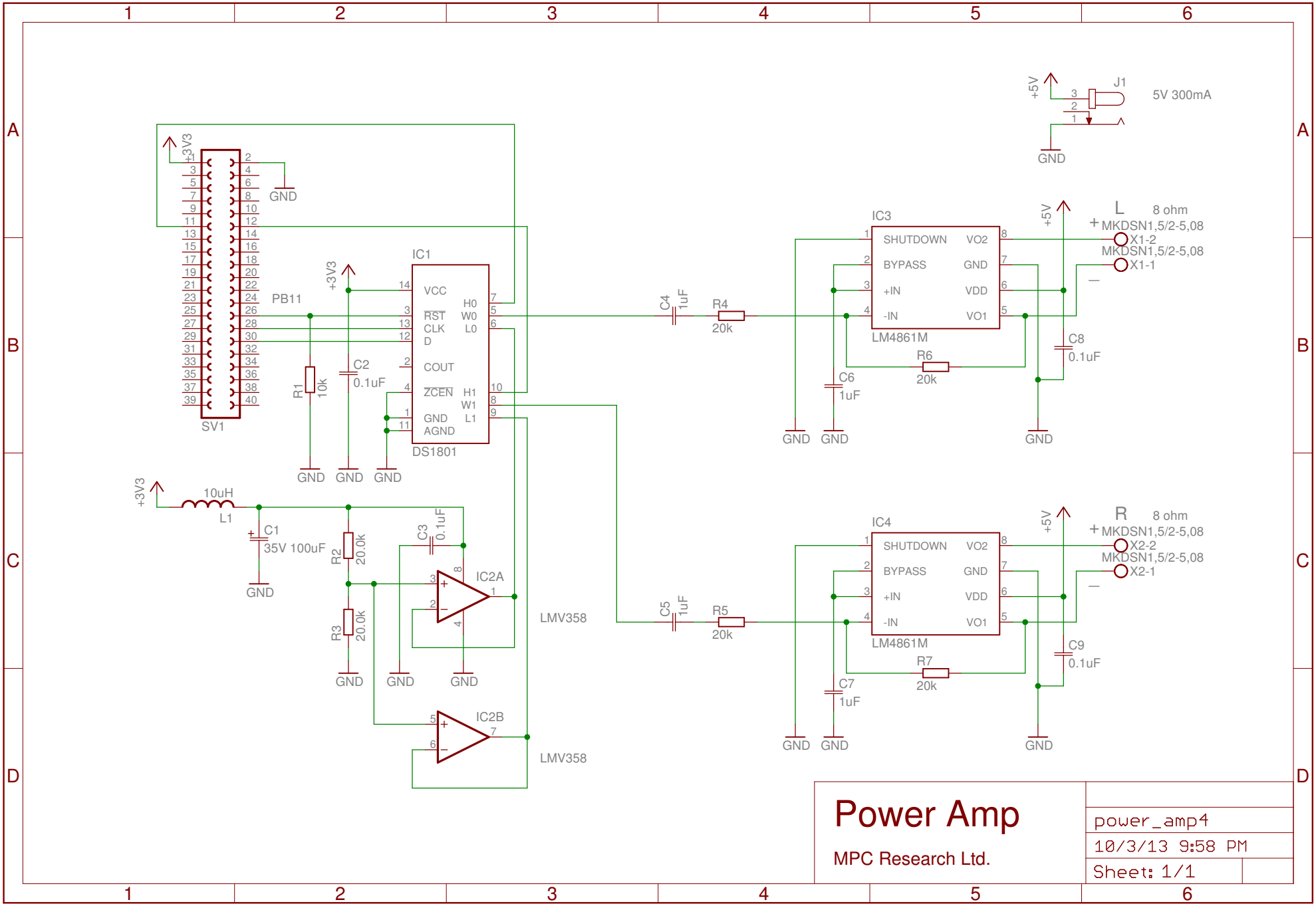
J1
5V 300mA
+5V
GND
SV1
+3V3
PB11
IC1
VCC
RST
CLK
D
COUT
ZCEN
GND
AGND
H0
W0
L0
H1
W1
L1
DS1801
R1
10k
C2
0.1uF
L1
10uH
C1
35V 100uF
R2
20.0k
R3
20.0k
C3
0.1uF
IC2A
IC2B
LMV358
C4
1uF
R4
20k
C5
1uF
R5
20k
IC3
IC4
SHUTDOWN
BYPASS
+IN
-IN
VO2
GND
VDD
VO1
LM4861M
R6
20k
R7
20k
C6
1uF
C7
1uF
C8
0.1uF
C9
0.1uF
L
R
8 ohm
MKDSN1,5/2-5,08
X1-2
X1-1
X2-2
X2-1
Power Amp
MPC Research Ltd.
power_amp4
10/3/13 9:58 PM
Sheet: 1/1