Reset/DFU Circuit

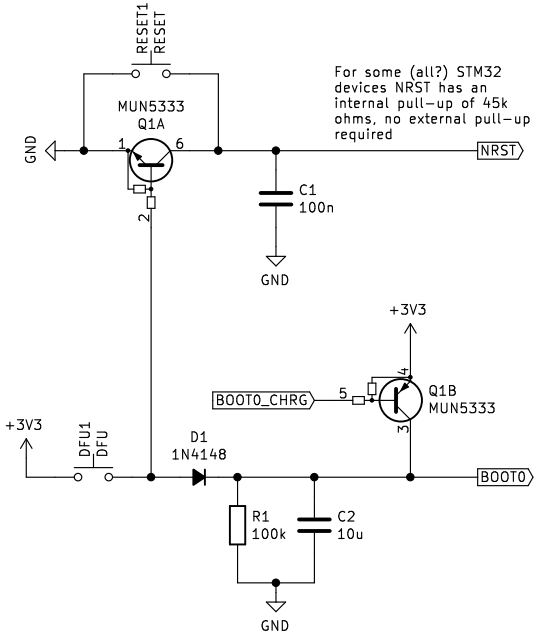

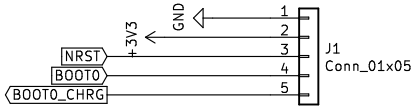

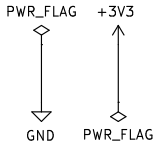

Sheet: /
File: dfu-reset-boot0.sch

Title:

Size: A4	Date:	**Rev:**
KiCad E.D.A. kicad (5.1.6)-1		Id: 1/1