REVISION RECORD				
REV	ECO	DESCRIPTION	DRFT	CHKD
A		原始版本		

NOTES:

MATERIAL:
1.HOUSING MATERIAL :GLASS FILLED POLYESTER(UL94V-0).
2.CONTACT MATERIAL :PHOSPHOR BRONZE ø0.46mm (C5100).
3.PLATING :GOLD PLATING OVER NICKEL.
4.SHIELD: COPPER ALLOY 0.20mm THICKNESS PLATING NI.

ELECTRICAL:
1.VOLTAGE RATING :125 VAC RMS.
2.CURRENT RATING :1.5 AMP.
3.CONTACT RESISTANCE :50 MILLIOHMS MAX.
4.INSULATION RESISTANCE :500 MEGOHMS MIN @ 500V DC.
5.DIELECTRIC WITHSTANDING RESISTANCE :1000V AC RMS 50Hz. 1MIN.

MECHANICAL:
1.DURRABILITY :750 CYCLES MIN.
2.PCB RETENTION PRE-SOLDER :1 LB MIN.

ENVIRONMENTAL:
1.STORAGE :-40°C TO +85°C.
2. OPERATION : 0°C TO 70°C.

MATES WITH MODULAR PLUG CONFORMING TO FCC PART 68,SUBPART F.

PART NUMBER:

A 58-0310810XX2X

58 SERIES
PCB JACK
(58系列PCB接口)

SHIELD (屏蔽壳):
1-W/O SHIELD(非屏)
2-HALF SHIELD (半包)
3-FULL SHIELD (全包)

PORTS (插口):
1-1X1 (一口). 2-1X2 (二口)
4-1X4 (四口). 5-1X5 (五口)
6-1X6 (六口). 8-1X8 (八口)

POSITIONS (金针位置):
4-4POSITIONS (4P)
6-6POSITIONS (6P)
8-8POSITIONS (8P)
0-10POSITIONS (10P)

CONTACTS (金针根数):
2-2CONTACTS (2C). 4-4CONTACTS (4C)
6-6CONTACTS (6C). 8-8CONTACTS (8C)
0-10CONTACTS (10C)

PEG/TAB(边定位铁脚):
0-W/O PEG (无铁脚). 1-FRONT PEG 3.05 (前脚3.05)
2-FRONT PEG3.68 (前脚3.68). 3-FRONT PEG4.57 (前脚4.57)
4-BACK PEG3.05 (后脚3.05)

BACK PEG (后背铁脚):
0-W/O BACK PEG (无后背铁脚).
1-1BACK PEG (1个后背铁脚)
2-2BACK PEG (2个后背铁脚).
3-3BACK PEG (3个后背铁脚)

PLASTIC (塑料):
1-PBT. 2-NYLON66 (尼龙66).
3-NYLON46 (尼龙46). 4-ABS

COLOR (颜色):1-BLACK (黑色).
2-WHITE (白色). 3-GRAY (灰色). 4-IVORY (象牙色)
5-YELLOE (黄色). 6-RED (红色).
7-GREEN (绿色). 8-BLUE (蓝色)

LOGO (标识):
0-W/O LOGO (无标识).
1-W/ JR (有JR标识)
2-W/ UL (有UL标识).
3-W/ JR。UL (有JR。UL)

GOLD PLATING
(镀金厚度)
1-F U". 2-1.5U"
3-3U". 4-6U".
5-15U". 6-30U"
7-50U"

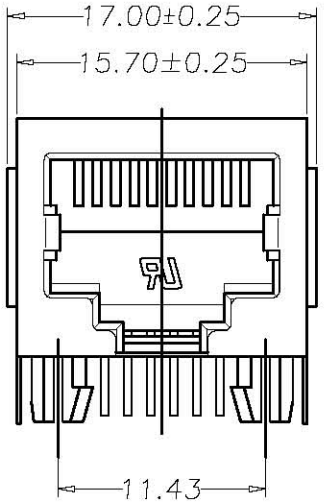

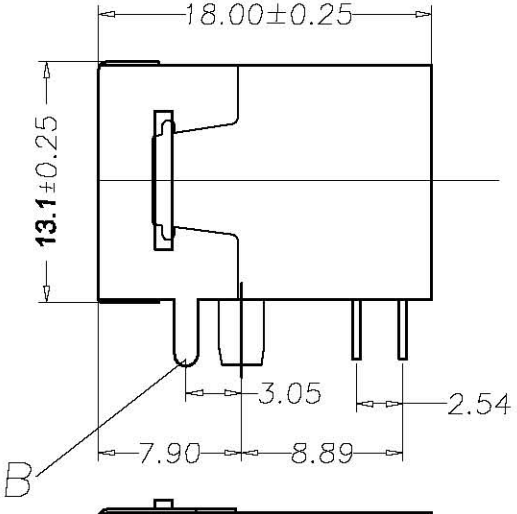

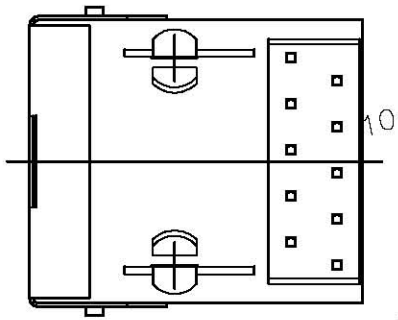

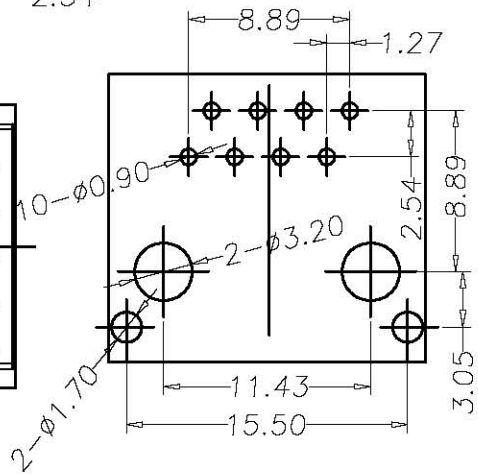

PC Board Layout

MM (INCH) 一般公差栏 .0 ±0.20 .00 ±0.15 .000 ±0.075 角度 ±0.01°	设计 zhangwei	日期 10.03.10	深圳市龙科达电子有限公司
	审核	日期	
	批准 zhangke	日期 10.03.10	系列 名称 5812-10P8C-A
	材料:		系列
	数量:		图号: A 5812-001 A4 版本 A
	表面处理:		料号:
第三角视图	比例: 1:1		不按比例 共 X 页 第 Y 页

DETACHED LISTS