Type-C Power IN

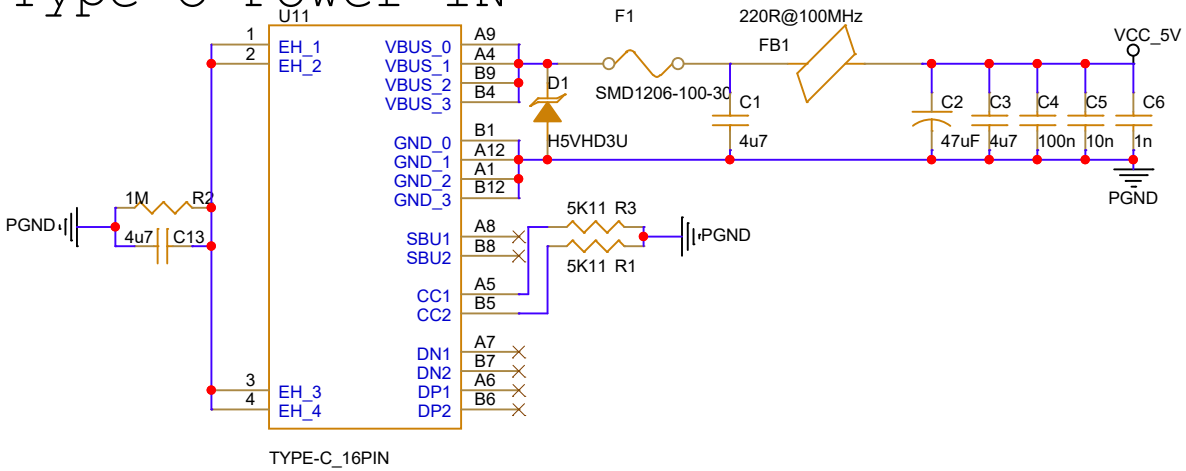

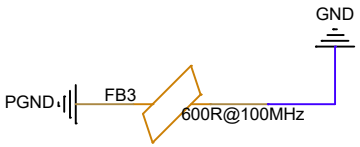

DCDC
5V IN to 3V3 DC

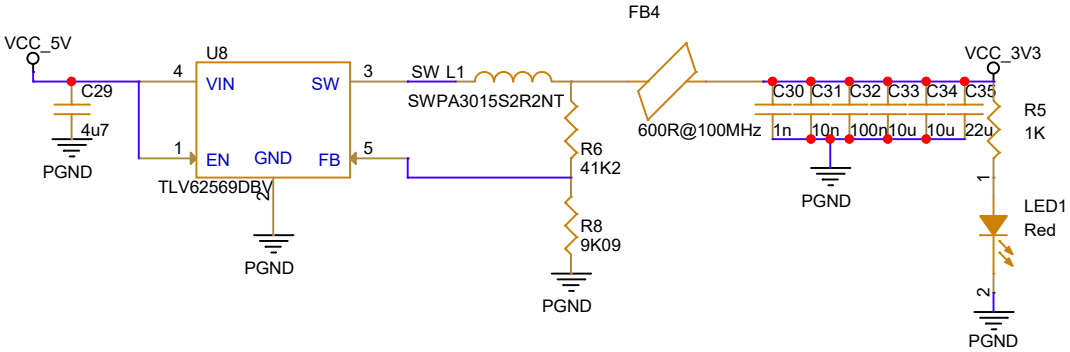

LDO
3V3 DCDC to 1V8 LDO

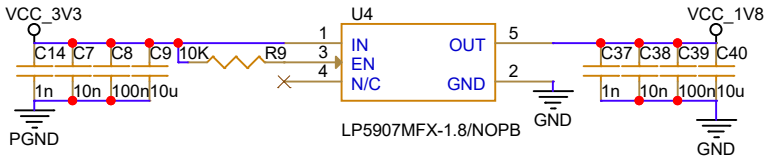

DCDC
5V IN to 1V1 DC

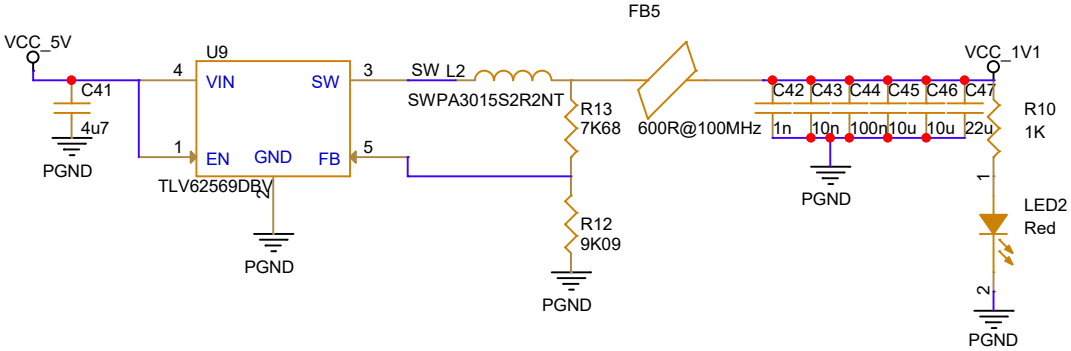

LDO
3V3 DCDC to 1V2 LDO

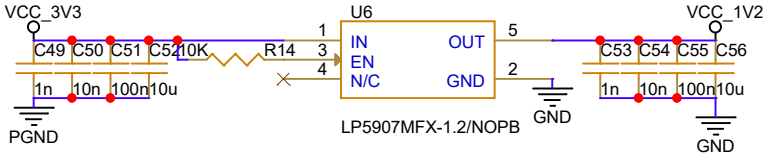

Title	<Title>	
Size A4	Document Number <Doc>	Rev <RevCo
Date: Monday, March 16, 2026	Sheet 1 of 1	

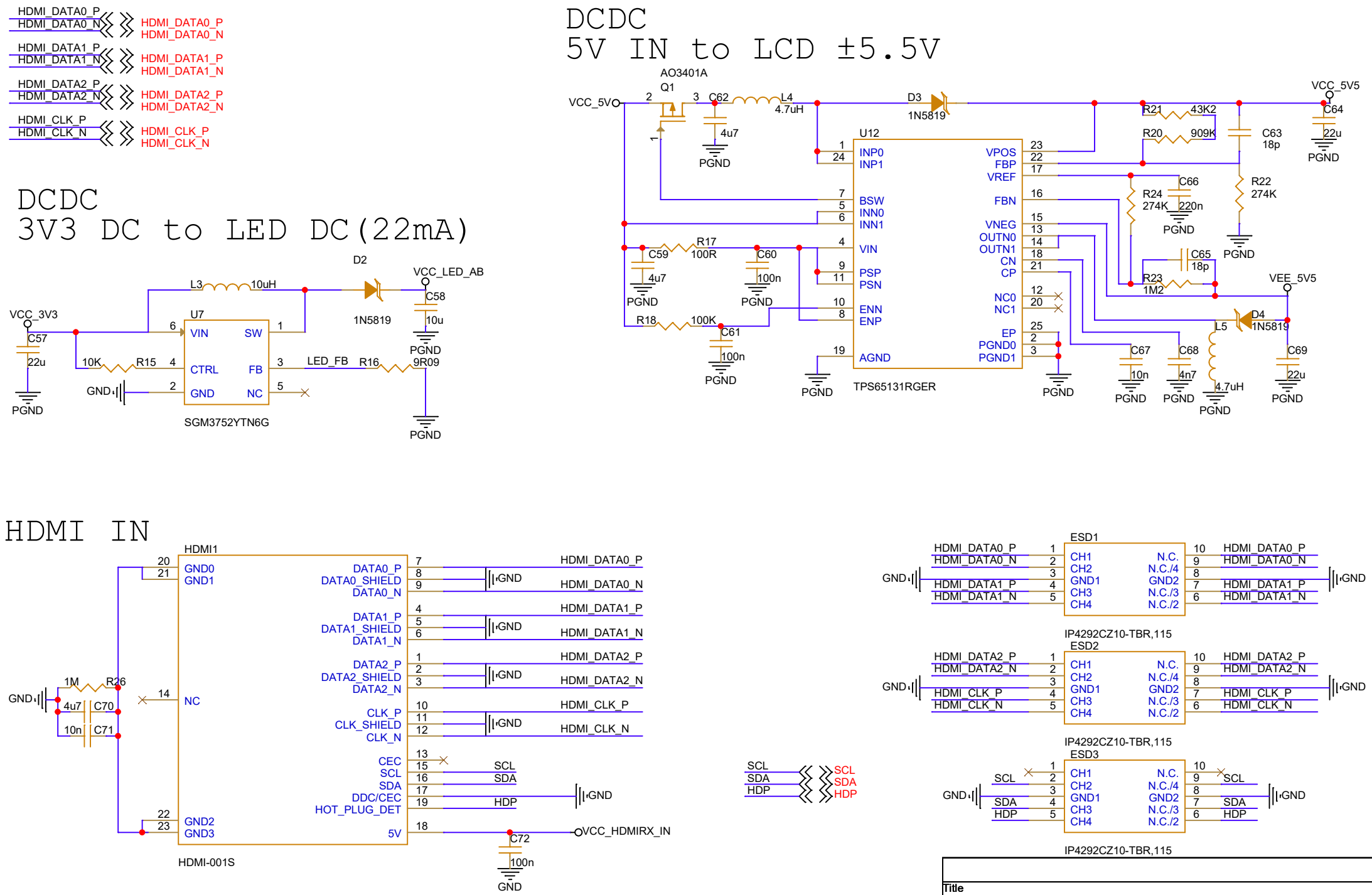

Title	<Title>	
Size A4	Document Number <Doc>	Rev <RevC>
Date: Monday, March 16, 2026	Sheet 1 of 1	

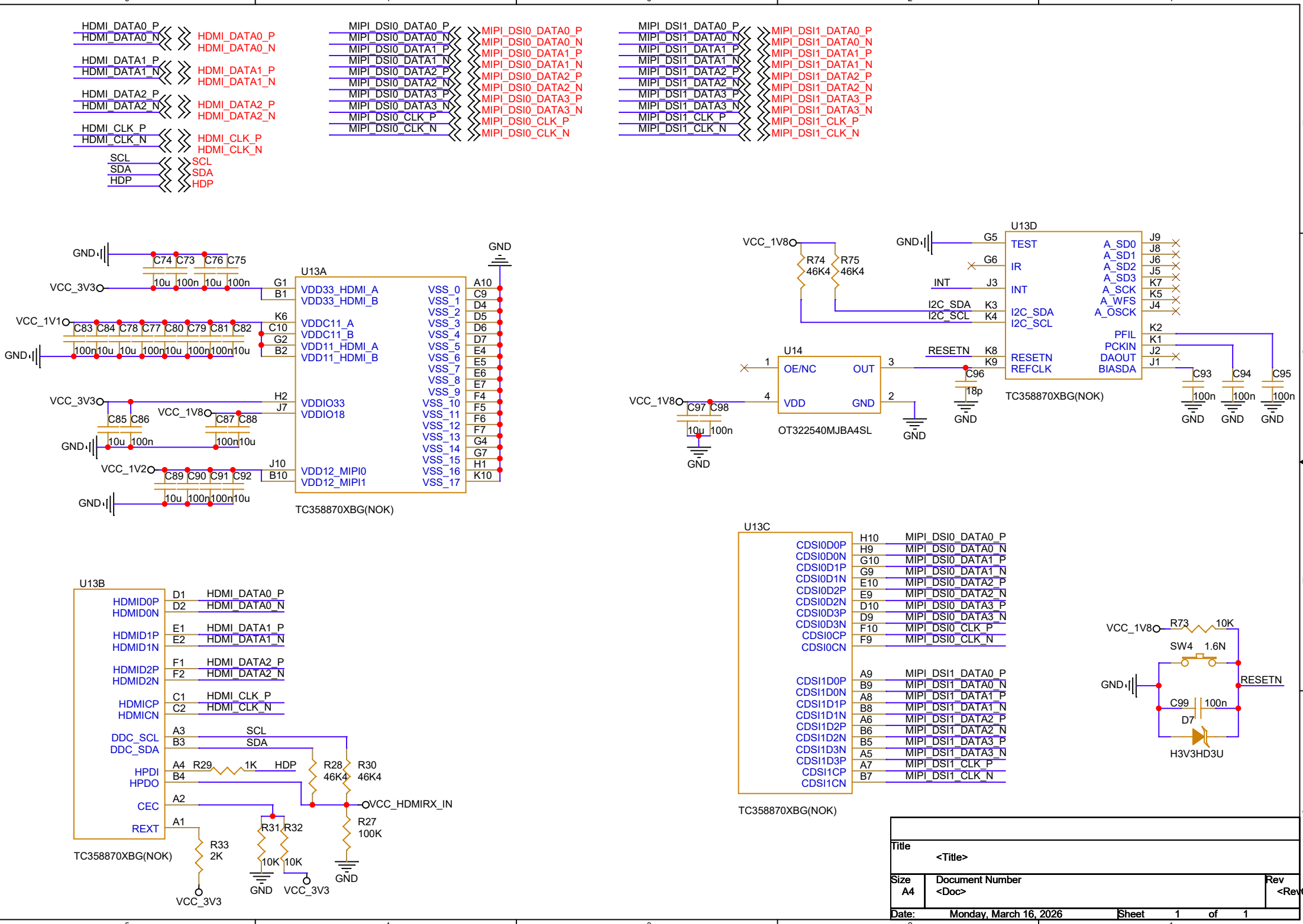

Title	<Title>	
Size A4	Document Number <Doc>	Rev <RevCo
Date: Monday, March 16, 2026	Sheet 1 of 1	

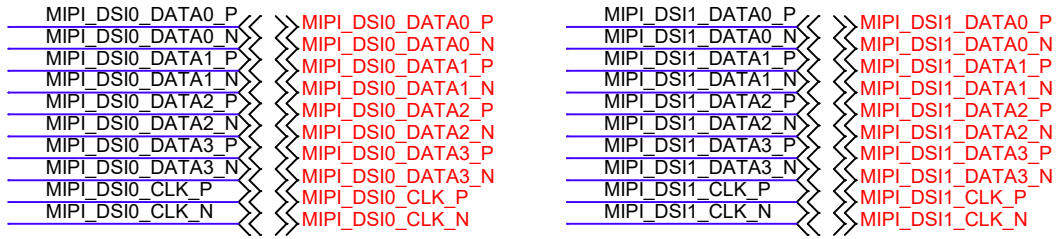

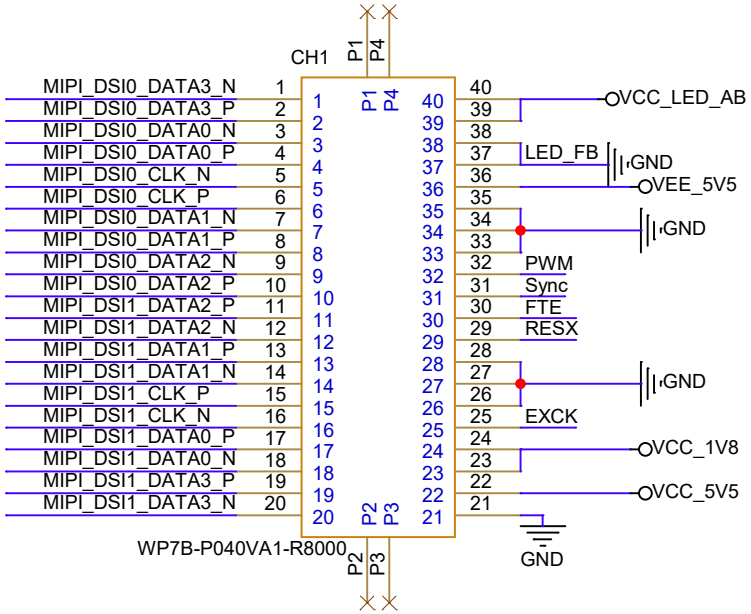

Title	<Title>	
Size A	Document Number <Doc>	Rev <RevCode>
Date: Monday, March 16, 2026	Sheet 1 of 1	