Revision			
Rev.	Description	Date	By
Rev A	Prototype Release	6/1/2022	EMOO
Rev B	Engineering Sample	9/16/2021	EMOO

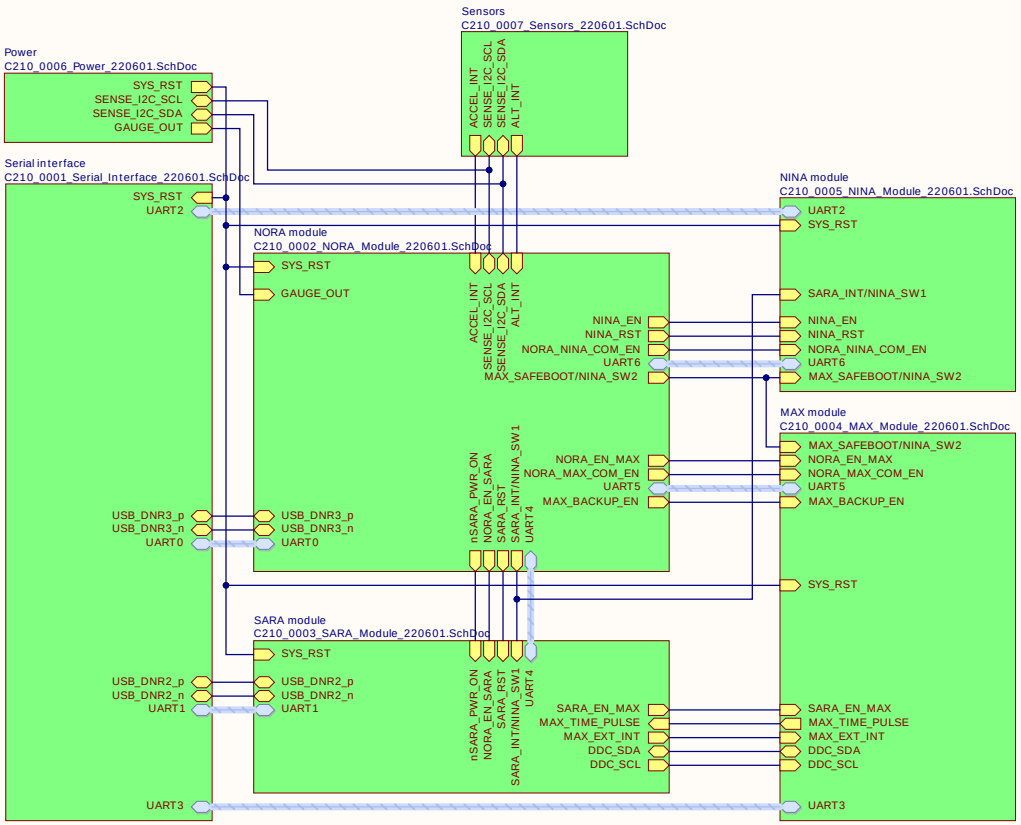

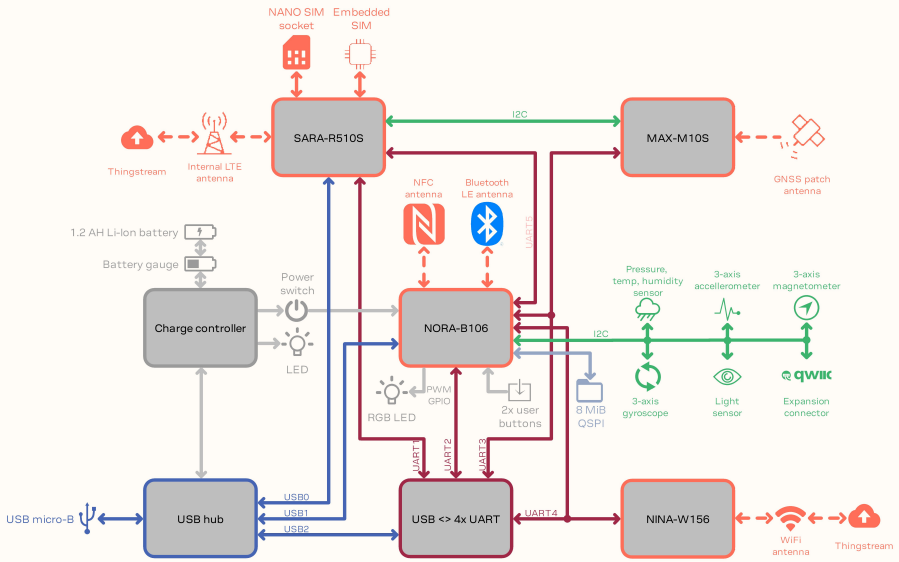

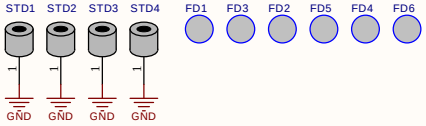

Prepared By u-blox CONFIDENTIAL	Project: C210	Board: C210	Revision: Rev B
	Client: u-blox	More info: www.u-blox.com	
Author: EMOO	Document title: C210_0000_Topsheet	C210_0000_Topsheet_220601.SchDoc	Page: 0 / 7
Sheet Size: B	DWG Num: 1	Last Modified: 2:48:33 PM 6/1/2022	

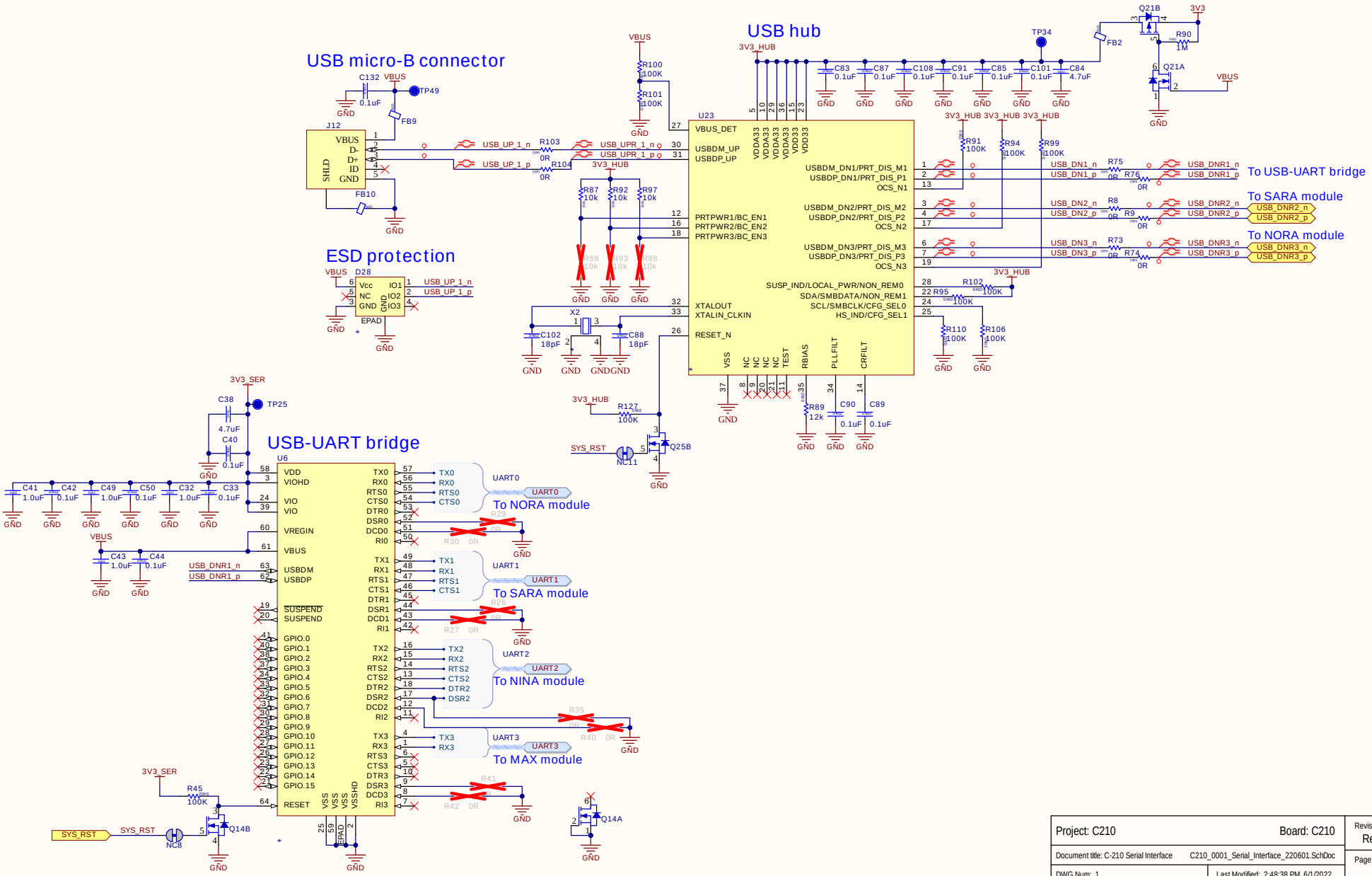
USB micro-B connector
J12
VBUS
D-
D+
ID
GND
SHLD
C132
TP49
FB9
FB10
USB_UP_1_n
USB_UP_1_p
R103
R104
USB_UPR_1_n
USB_UPR_1_p
ESD protection
D28
Vcc
NC
GND
IO1
IO2
IO3
EPAD
USB hub
U23
VBUS_DET
USBDM_UP
USBDP_UP
PRTPWR1/BC_EN1
PRTPWR2/BC_EN2
PRTPWR3/BC_EN3
XTALOUT
XTALIN_CLKIN
RESET_N
USBDM_DN1/PRT_DIS_M1
USBDP_DN1/PRT_DIS_P1
OCS_N1
USBDM_DN2/PRT_DIS_M2
USBDP_DN2/PRT_DIS_P2
OCS_N2
USBDM_DN3/PRT_DIS_M3
USBDP_DN3/PRT_DIS_P3
OCS_N3
SUSP_IND/LOCAL_PWR/NON_REM0
SDA/SMBDATA/NON_REM1
SCL/SMBCLK/CFG_SEL0
HS_IND/CFG_SEL1
VDDA33
VDD33
VSS
NC
TEST
RBIAS
PLLFILT
CRFILT
3V3_HUB
R100
R101
R87
R92
R97
R88
R93
R98
X2
C102
C88
18pF
R91
R94
R99
R75
R76
R8
R9
R73
R74
R95
R102
R110
R106
R127
R89
C90
C89
Q25B
SYS_RST
NC11
Q21B
Q21A
R90
FB2
TP34
C83
C87
C108
C91
C85
C101
C84
USB_DN1_n
USB_DN1_p
USB_DN2_n
USB_DN2_p
USB_DN3_n
USB_DN3_p
USB_DNR1_n
USB_DNR1_p
USB_DNR2_n
USB_DNR2_p
USB_DNR3_n
USB_DNR3_p
To USB-UART bridge
To SARA module
To NORA module
USB-UART bridge
U6
VDD
VIOHD
VIO
VREGIN
VBUS
USBDM
USBDP
SUSPEND
GPIO.0
GPIO.1
GPIO.2
GPIO.3
GPIO.4
GPIO.5
GPIO.6
GPIO.7
GPIO.8
GPIO.9
GPIO.10
GPIO.11
GPIO.12
GPIO.13
GPIO.14
GPIO.15
RESET
TX0
RX0
RTS0
CTS0
DTR0
DSR0
DCD0
RI0
TX1
RX1
RTS1
CTS1
DTR1
DSR1
DCD1
RI1
TX2
RX2
RTS2
CTS2
DTR2
DSR2
DCD2
RI2
TX3
RX3
RTS3
CTS3
DTR3
DSR3
DCD3
RI3
VSS
VSHD
EPAD
UART0
UART1
UART2
UART3
To NORA module
To SARA module
To NINA module
To MAX module
R20
R30
R21
R27
R35
R40
R41
R42
R45
Q14B
NC8
Q14A
3V3_SER
TP25
C38
C40
C41
C42
C49
C50
C32
C33
C43
C44
Project: C210
Board: C210
Revision:
Rev B
Document title: C-210 Serial Interface
C210_0001_Serial_Interface_220601.SchDoc
DWG Num: 1
Last Modified: 2:48:38 PM 6/1/2022
Page:
1 / 7

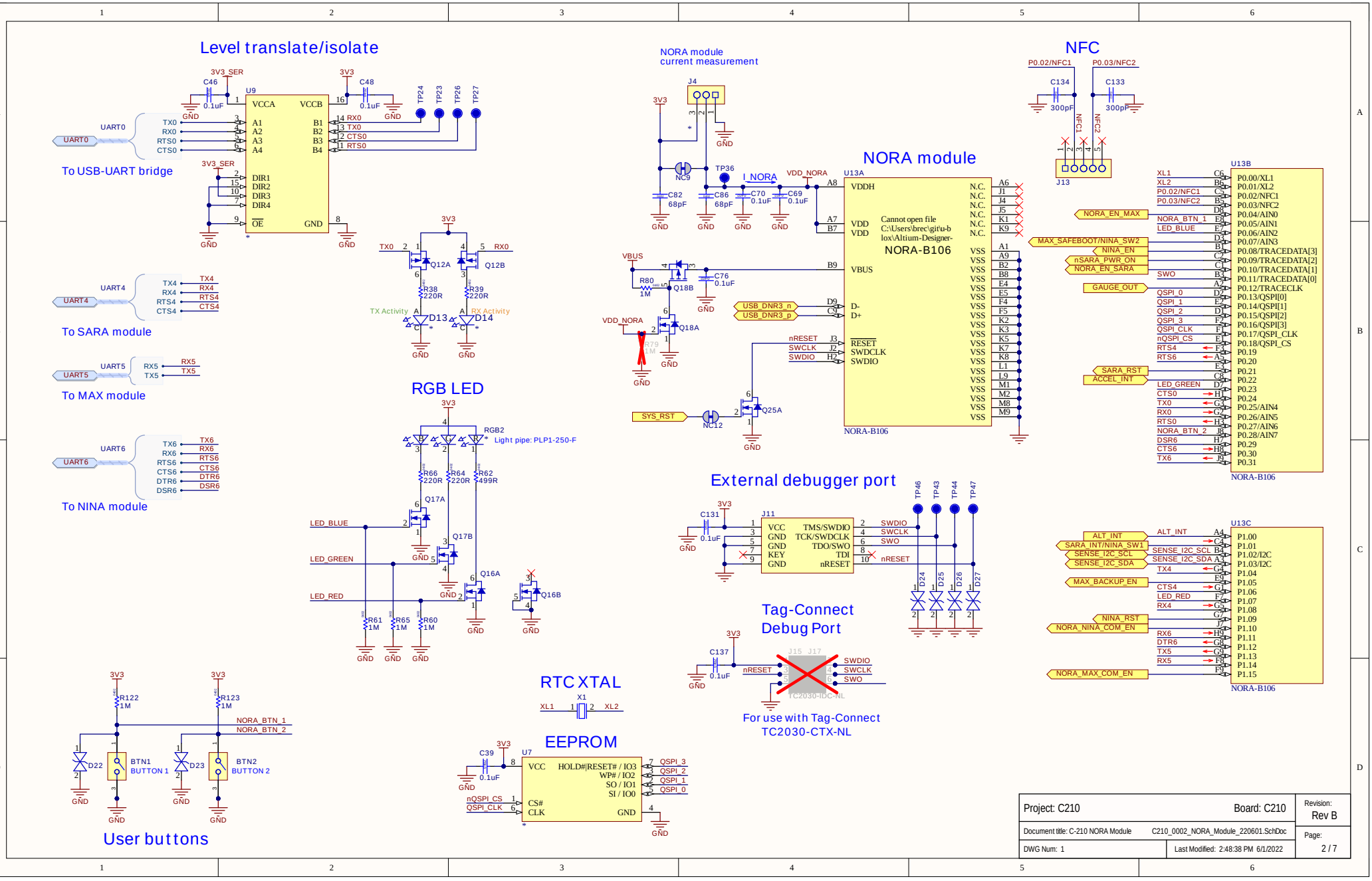
Level translate/isolate
U9
VCCA
VCCB
A1
A2
A3
A4
B1
B2
B3
B4
DIR1
DIR2
DIR3
DIR4
OE
GND
3V3_SER
3V3
C46
0.1uF
C48
0.1uF
TP24
TP23
TP26
TP27
UART0
TX0
RX0
RTS0
CTS0
To USB-UART bridge
UART4
TX4
RX4
RTS4
CTS4
To SARA module
UART5
RX5
TX5
To MAX module
UART6
TX6
RX6
RTS6
CTS6
DTR6
DSR6
To NINA module
Q12A
Q12B
R38 220R
R39 220R
TX Activity
RX Activity
D13
D14
RGB LED
RGB2
Light pipe: PLP1-250-F
R66 220R
R64 220R
R62 499R
Q17A
Q17B
Q16A
Q16B
LED_BLUE
LED_GREEN
LED_RED
R61 1M
R65 1M
R60 1M
R122 1M
R123 1M
NORA_BTN_1
NORA_BTN_2
D22
D23
BTN1 BUTTON 1
BTN2 BUTTON 2
User buttons
NORA module current measurement
J4
NC9
TP36
I_NORA
VDD_NORA
C82 68pF
C86 68pF
C70 0.1uF
C69 0.1uF
NORA module
U13A
VDDH
VDD
VDD
VBUS
D-
D+
RESET
SWCLK
SWDIO
Cannot open file C:\Users\brec\git\u-blox\Altium-Designer-
NORA-B106
VBUS
R80 1M
Q18B
C76 0.1uF
VDD_NORA
R79 1M
Q18A
USB_DNR3_n
USB_DNR3_p
nRESET
SWCLK
SWDIO
SYS_RST
NC12
Q25A
NORA-B106
NFC
P0.02/NFC1
P0.03/NFC2
C134 300pF
C133 300pF
NFC1
NFC2
J13
U13B
P0.00/XL1
P0.01/XL2
P0.02/NFC1
P0.03/NFC2
P0.04/AIN0
P0.05/AIN1
P0.06/AIN2
P0.07/AIN3
P0.08/TRACEDATA[3]
P0.09/TRACEDATA[2]
P0.10/TRACEDATA[1]
P0.11/TRACEDATA[0]
P0.12/TRACECLK
P0.13/QSPI[0]
P0.14/QSPI[1]
P0.15/QSPI[2]
P0.16/QSPI[3]
P0.17/QSPI_CLK
P0.18/QSPI_CS
P0.19
P0.20
P0.21
P0.22
P0.23
P0.24
P0.25/AIN4
P0.26/AIN5
P0.27/AIN6
P0.28/AIN7
P0.29
P0.30
P0.31
NORA_EN_MAX
MAX_SAFEBOOT/NINA_SW2
NINA_EN
nSARA_PWR_ON
NORA_EN_SARA
GAUGE_OUT
SARA_RST
ACCEL_INT
External debugger port
C131 0.1uF
J11
VCC
GND
GND
KEY
GND
TMS/SWDIO
TCK/SWDCLK
TDO/SWO
TDI
nRESET
SWDIO
SWCLK
SWO
nRESET
TP46
TP43
TP44
TP47
D24
D25
D26
D27
Tag-Connect Debug Port
C137 0.1uF
J15 J17
TC2030-IDC-NL
For use with Tag-Connect TC2030-CTX-NL
U13C
P1.00
P1.01
P1.02/I2C
P1.03/I2C
P1.04
P1.05
P1.06
P1.07
P1.08
P1.09
P1.10
P1.11
P1.12
P1.13
P1.14
P1.15
ALT_INT
SARA_INT/NINA_SW1
SENSE_I2C_SCL
SENSE_I2C_SDA
MAX_BACKUP_EN
NINA_RST
NORA_NINA_COM_EN
NORA_MAX_COM_EN
RTC XTAL
X1
XL1
XL2
EEPROM
U7
VCC
CS#
CLK
HOLD#|RESET# / IO3
WP# / IO2
SO / IO1
SI / IO0
GND
QSPI_3
QSPI_2
QSPI_1
QSPI_0
nQSPI_CS
QSPI_CLK
C39 0.1uF
Project: C210
Board: C210
Revision: Rev B
Document title: C-210 NORA Module
C210_0002_NORA_Module_220601.SchDoc
DWG Num: 1
Last Modified: 2:48:38 PM 6/1/2022
Page: 2 / 7

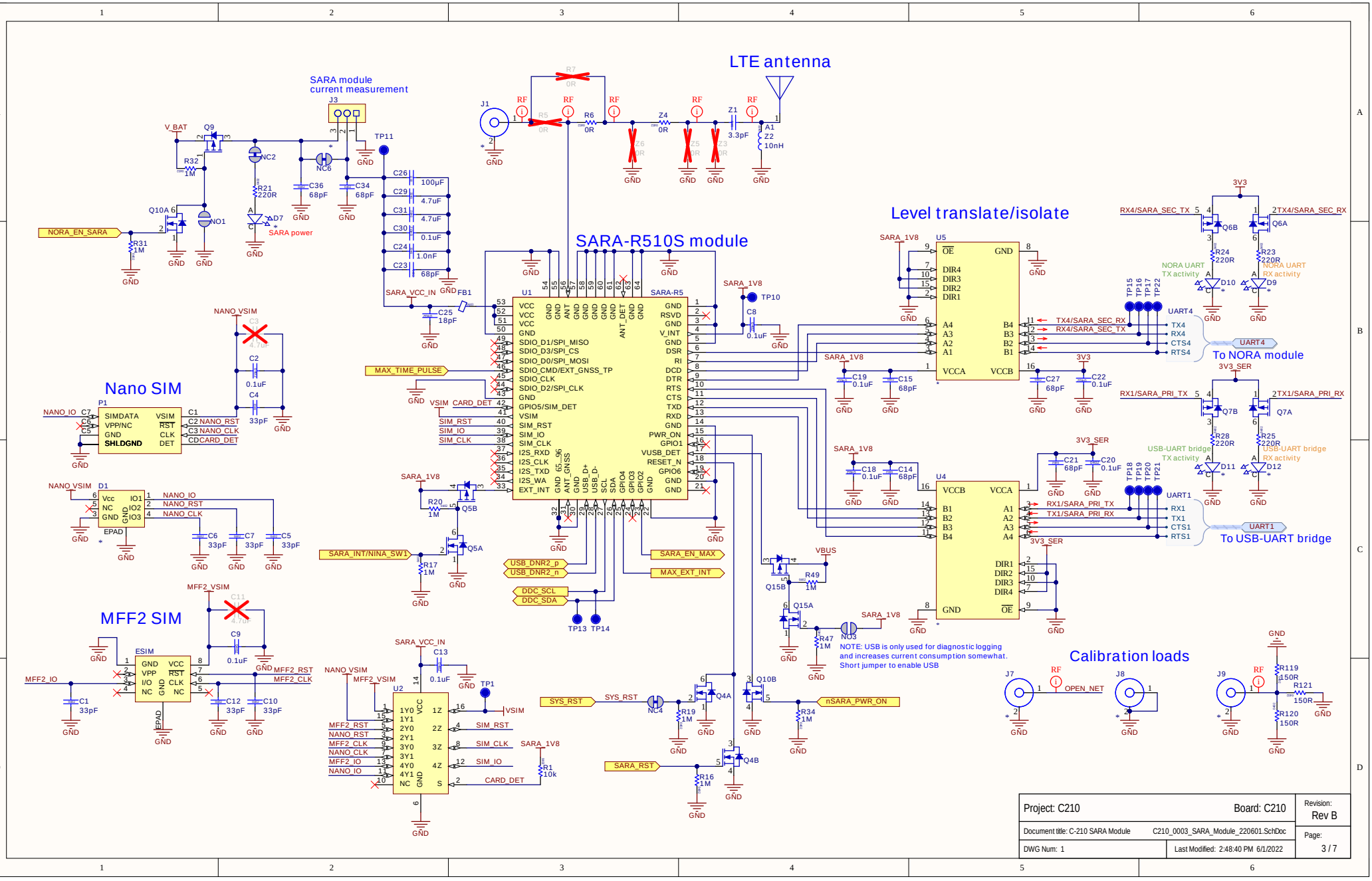
LTE antenna
SARA module current measurement
SARA-R510S module
Level translate/isolate
Nano SIM
MFF2 SIM
Calibration loads
To NORA module
To USB-UART bridge
SARA power
NOTE: USB is only used for diagnostic logging and increases current consumption somewhat. Short jumper to enable USB
Project: C210
Board: C210
Revision: Rev B
Document title: C-210 SARA Module
C210_0003_SARA_Module_220601.SchDoc
DWG Num: 1
Last Modified: 2:48:40 PM 6/1/2022
Page: 3 / 7

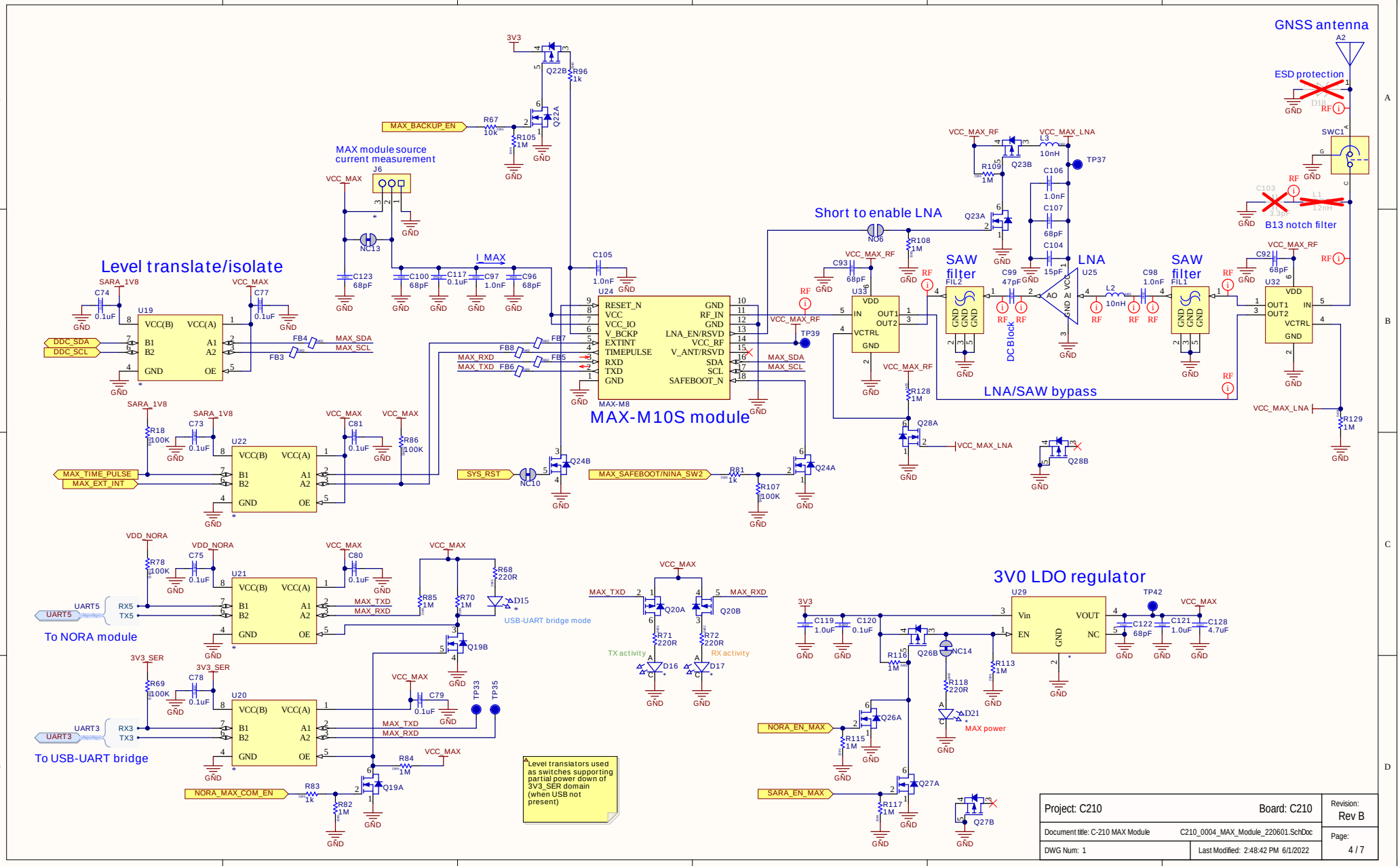
GNSS antenna
ESD protection
B13 notch filter
Short to enable LNA
MAX module source current measurement
Level translate/isolate
MAX-M10S module
SAW filter
LNA
SAW filter
DC Block
LNA/SAW bypass
3V0 LDO regulator
To NORA module
To USB-UART bridge
USB-UART bridge mode
TX activity
RX activity
MAX power
Level translators used as switches supporting partial power down of 3V3_SER domain (when USB not present)
Project: C210
Board: C210
Revision: Rev B
Document title: C-210 MAX Module
C210_0004_MAX_Module_220601.SchDoc
DWG Num: 1
Last Modified: 2:48:42 PM 6/1/2022
Page: 4 / 7

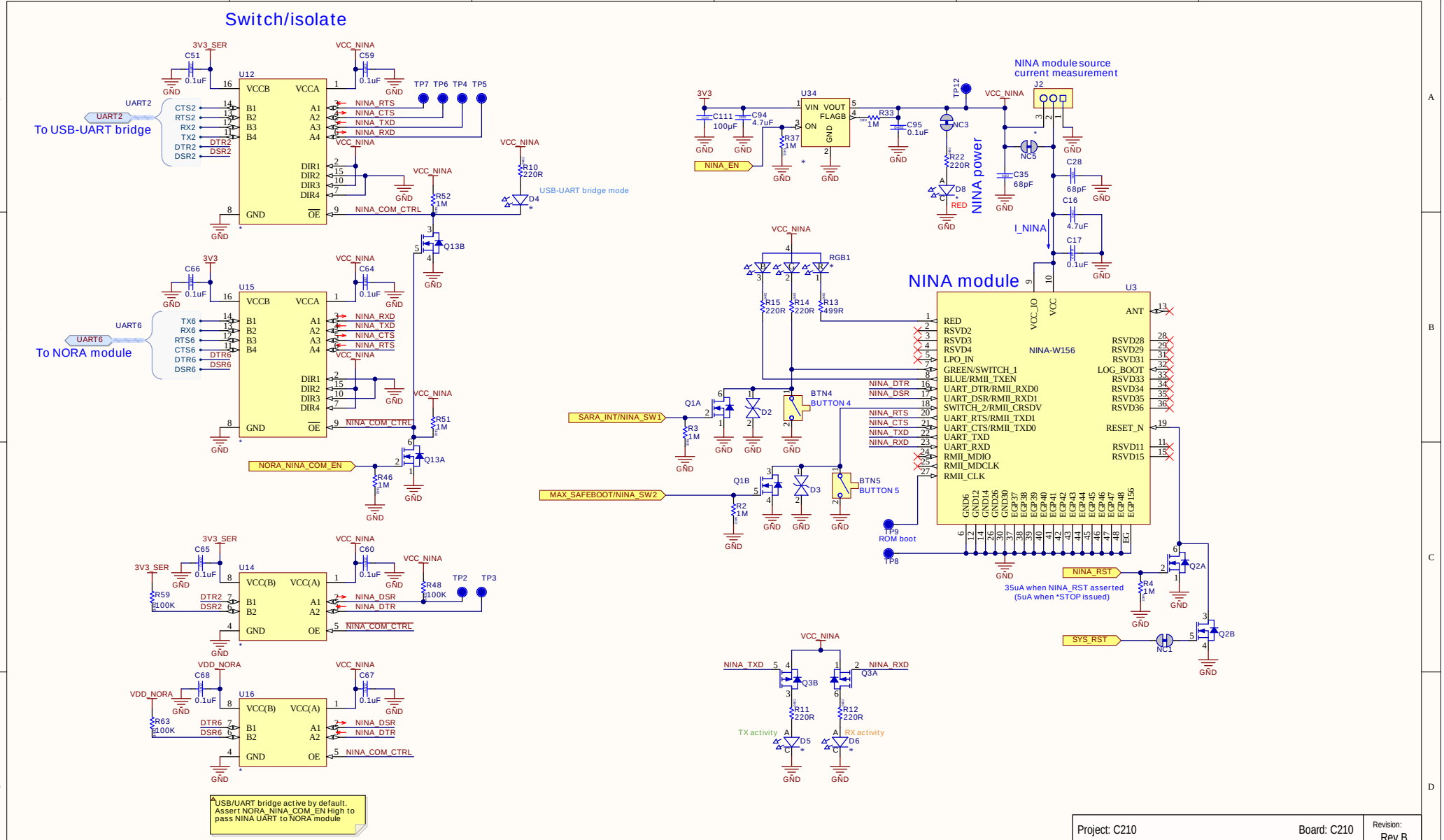
Switch/isolate
To USB-UART bridge
To NORA module
U12
U15
U14
U16
U34
U3
NINA module
NINA-W156
NINA module source current measurement
NINA power
USB-UART bridge mode
35uA when NINA_RST asserted (5uA when *STOP issued)
USB/UART bridge active by default. Assert NORA_NINA_COM_EN High to pass NINA UART to NORA module
Project: C210
Board: C210
Revision: Rev B
Document title: C-210NINA Module
C210_0005_NINA_Module_220601.SchDoc
DWG Num: 1
Last Modified: 2:48:43 PM 6/1/2022
Page: 5 / 7

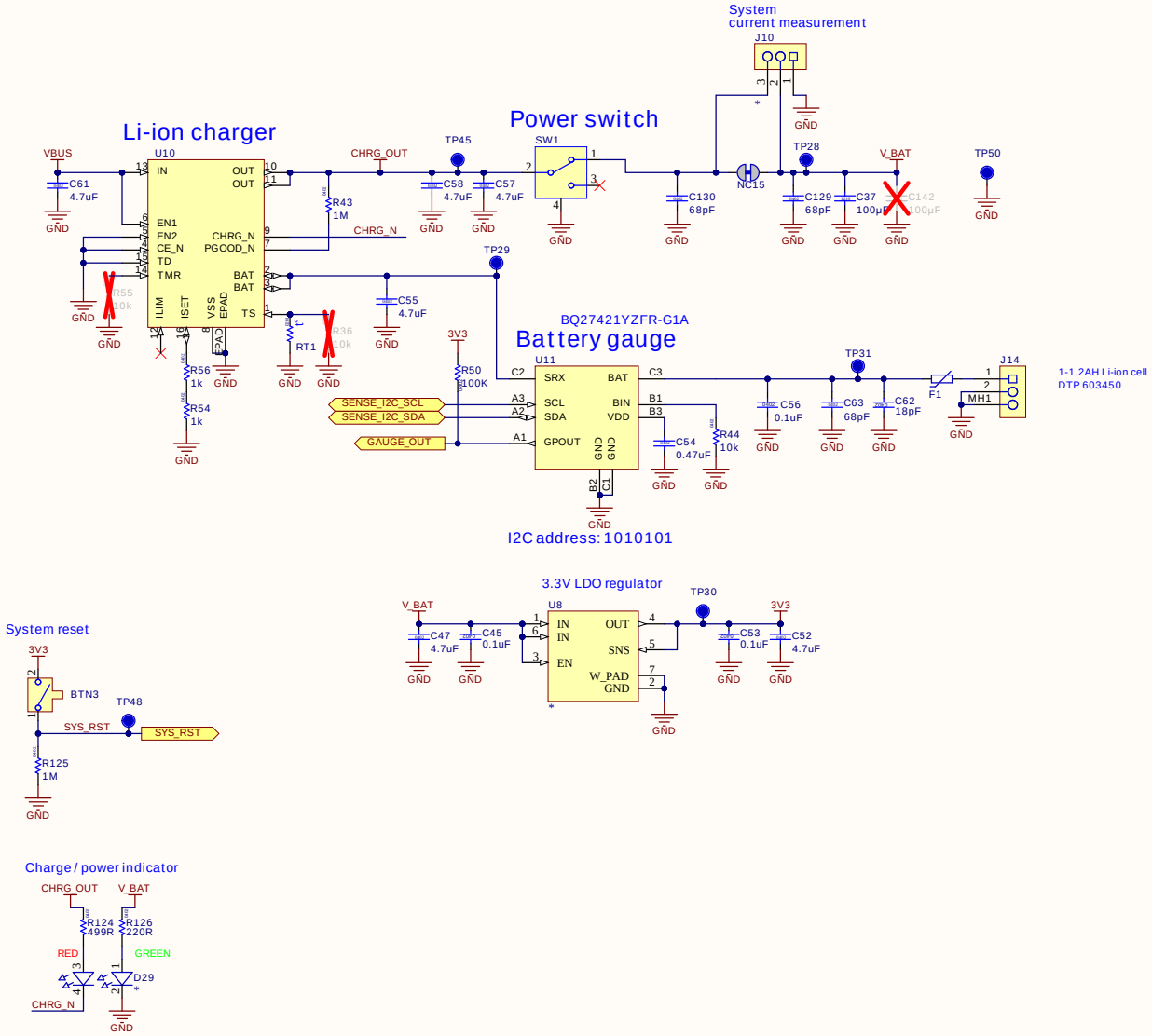

Project: C210	Board: C210	Revision: Rev B
Document title: C-210 Power	C210_0006_Power_220601.SchDoc	Page: 6 / 7
DWG Num: 1	Last Modified: 2:48:44 PM 6/1/2022	

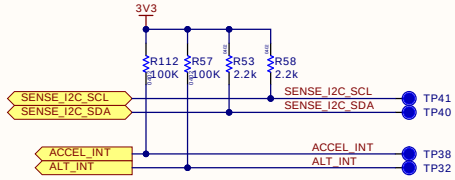

Accelerometer, temperature sensor

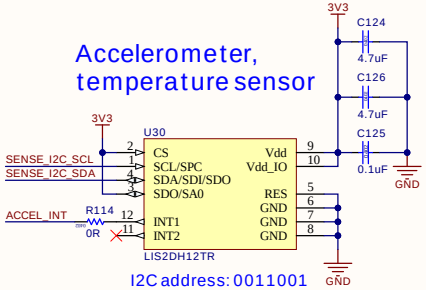

I2C address: 0011001

Alternate accelerometer

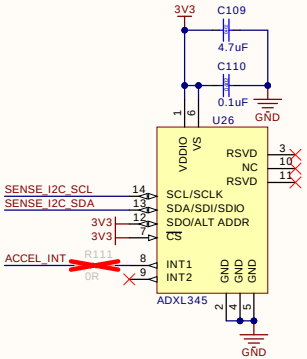

I2C address: 0011101

Gyroscope

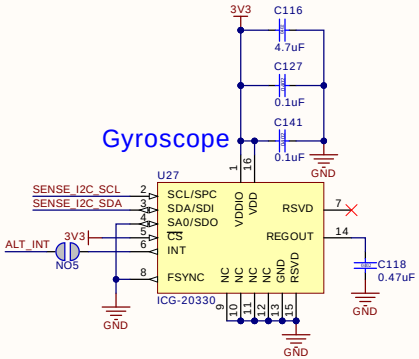

I2C address: 1101000

Humidity, pressure, temperature sensor

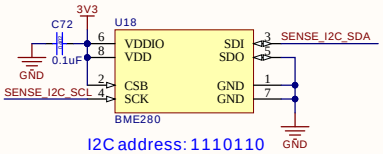

I2C address: 1110110

Alternate humidity sensor

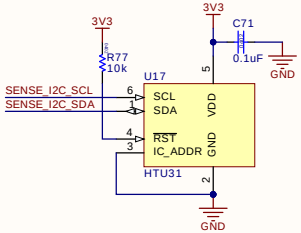

I2C address: 1000000

QWIIC interface

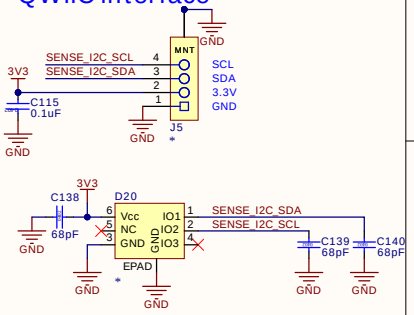

Ambient light sensor

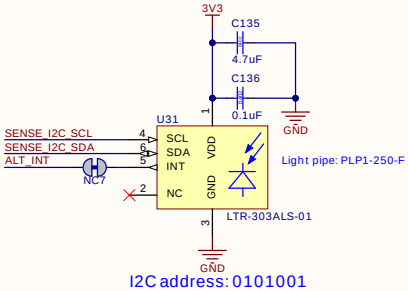

I2C address: 0101001

Magnetometer

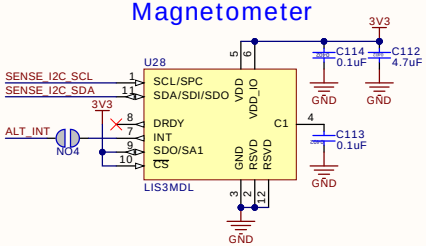

I2C address: 0011110

Project: C210	Board: C210	Revision: Rev B
Document title: C-210 Sensors	C210_0007_Sensors_220601.SchDoc	Page: 7 / 7
DWG Num: 1	Last Modified: 2:48:45 PM 6/1/2022	