Revision			
Rev.	Description	Date	By
Rev A	Prototype Release	5/4/2021	EMOO
Rev B	Engineering Sample	9/16/2021	EMOO
Rev C	Initial Production	7/13/2022	EMOO

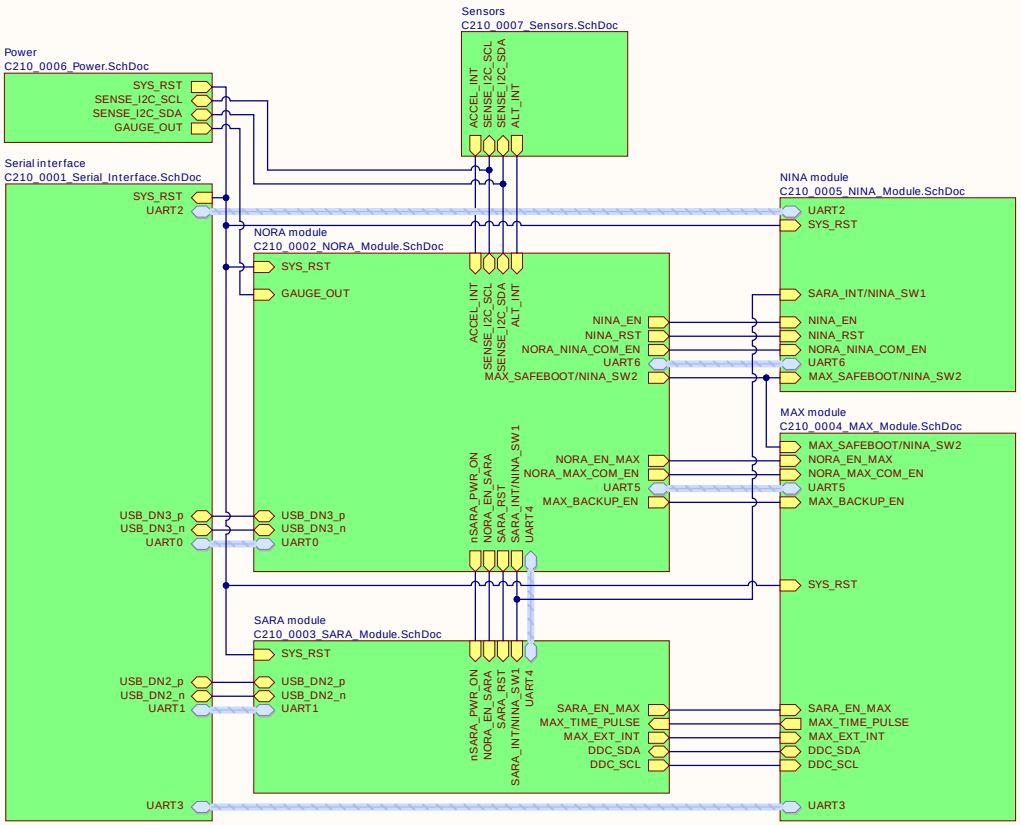

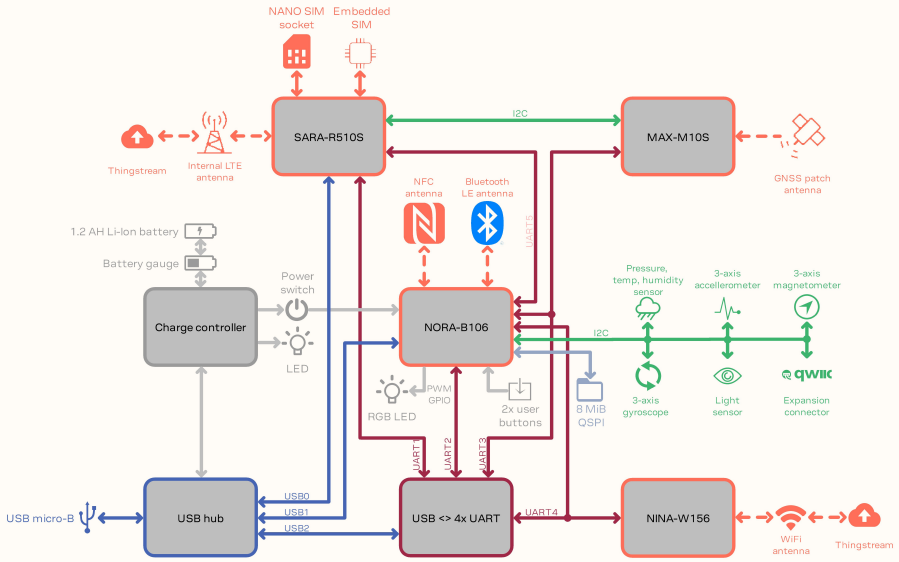

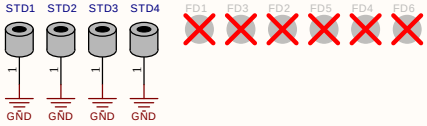

Prepared By u-blox CONFIDENTIAL	Project: XPLR-IOT-1	Board: C210	Revision: Rev D
	Client: u-blox	More info: www.u-blox.com	
Author: EMOO	Document title: C210_0000_Topsheet	C210_0000_Topsheet.SchDoc	Page: 0 / 7
Sheet Size: B	DWG Num: 1	Last Modified: 2:42:47 PM 11/7/2022	

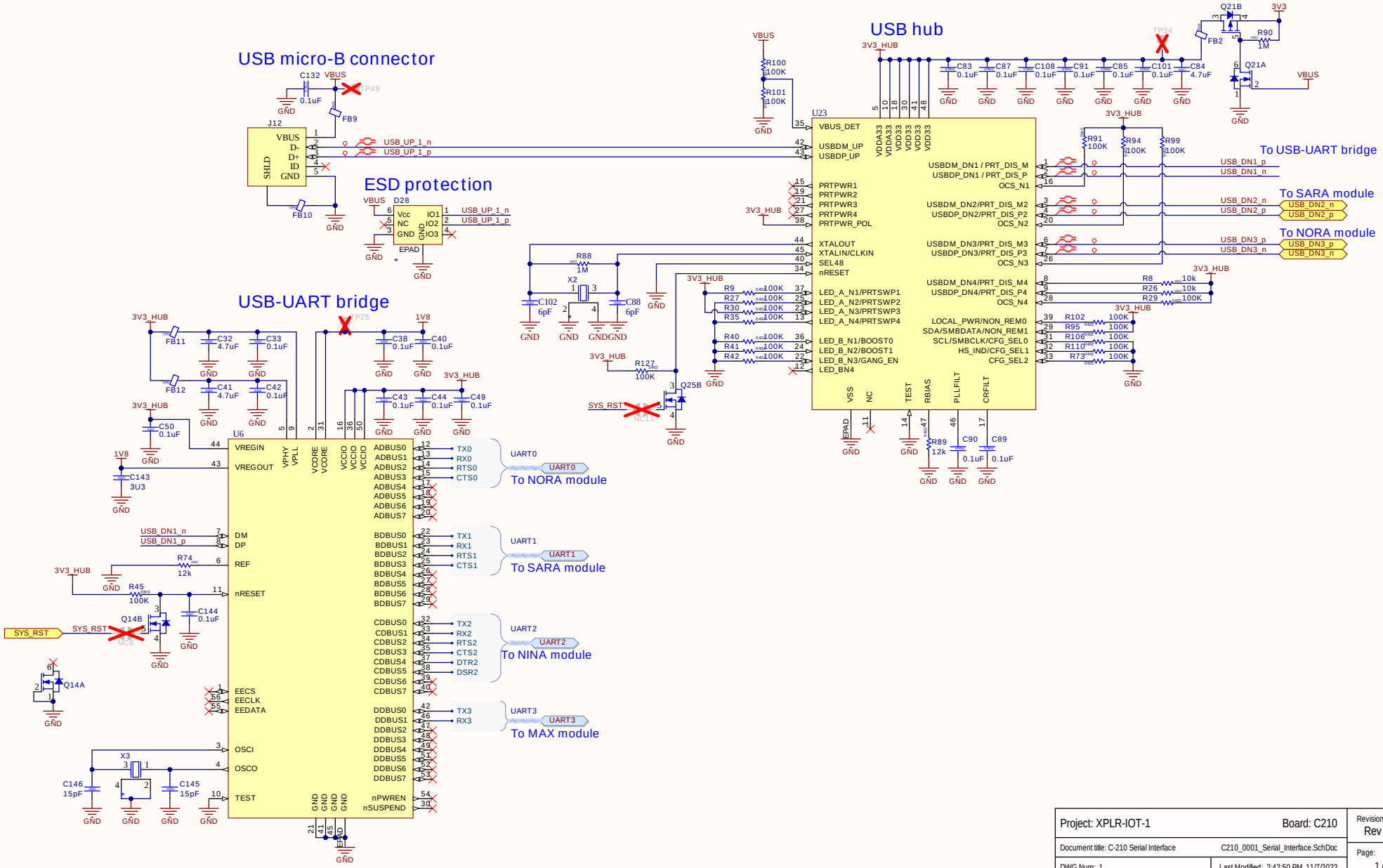

Project: XPLR-IOT-1	Board: C210	Revision: Rev D
Document title: C-210 Serial Interface	C210_0001_Serial_Interface.SchDoc	Page: 1 / 7
DWG Num: 1	Last Modified: 2:42:50 PM 11/7/2022	

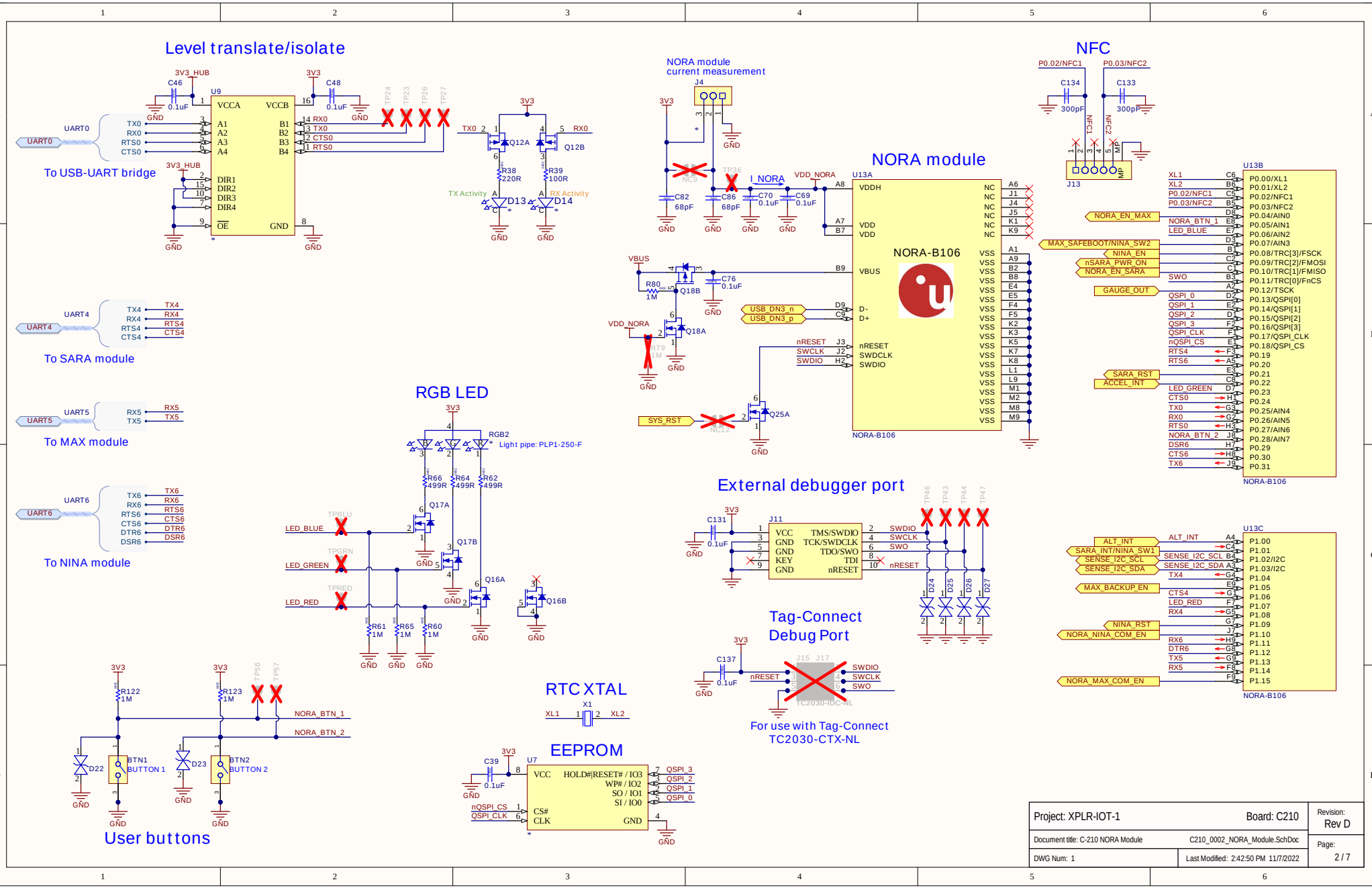
Level translate/isolate
U9
VCCA
VCCB
A1
A2
A3
A4
B1
B2
B3
B4
DIR1
DIR2
DIR3
DIR4
OE
GND
3V3_HUB
3V3
C46
C48
0.1uF
UART0
TX0
RX0
RTS0
CTS0
To USB-UART bridge
UART4
TX4
RX4
RTS4
CTS4
To SARA module
UART5
RX5
TX5
To MAX module
UART6
TX6
RX6
RTS6
CTS6
DTR6
DSR6
To NINA module
Q12A
Q12B
R38 220R
R39 100R
TX Activity
RX Activity
D13
D14
NORA module current measurement
J4
C82 68pF
C86 68pF
C70 0.1uF
C69 0.1uF
I_NORA
VDD_NORA
NORA module
U13A
VDDH
VDD
VBUS
D-
D+
nRESET
SWCLK
SWDIO
NORA-B106
VBUS
R80 1M
Q18B
C76 0.1uF
Q18A
R79 1M
USB_DN3_n
USB_DN3_p
SYS_RST
Q25A
NFC
P0.02/NFC1
P0.03/NFC2
C134 300pF
C133 300pF
J13
U13B
P0.00/XL1
P0.01/XL2
P0.02/NFC1
P0.03/NFC2
P0.04/AIN0
P0.05/AIN1
P0.06/AIN2
P0.07/AIN3
P0.08/TRC[3]/FSCK
P0.09/TRC[2]/FMOSI
P0.10/TRC[1]/FMISO
P0.11/TRC[0]/FnCS
P0.12/TSCK
P0.13/QSPI[0]
P0.14/QSPI[1]
P0.15/QSPI[2]
P0.16/QSPI[3]
P0.17/QSPI_CLK
P0.18/QSPI_CS
P0.19
P0.20
P0.21
P0.22
P0.23
P0.24
P0.25/AIN4
P0.26/AIN5
P0.27/AIN6
P0.28/AIN7
P0.29
P0.30
P0.31
NORA_EN_MAX
MAX_SAFEBOOT/NINA_SW2
NINA_EN
nSARA_PWR_ON
NORA_EN_SARA
GAUGE_OUT
SARA_RST
ACCEL_INT
RGB LED
RGB2
Light pipe: PLP1-250-F
R66 499R
R64 499R
R62 499R
Q17A
Q17B
Q16A
Q16B
LED_BLUE
LED_GREEN
LED_RED
R61 1M
R65 1M
R60 1M
External debugger port
J11
VCC
GND
KEY
TMS/SWDIO
TCK/SWDCLK
TDO/SWO
TDI
nRESET
SWDIO
SWCLK
SWO
C131 0.1uF
D24
D25
D26
D27
U13C
ALT_INT
SARA_INT/NINA_SW1
SENSE_I2C_SCL
SENSE_I2C_SDA
MAX_BACKUP_EN
NINA_RST
NORA_NINA_COM_EN
NORA_MAX_COM_EN
P1.00
P1.01
P1.02/I2C
P1.03/I2C
P1.04
P1.05
P1.06
P1.07
P1.08
P1.09
P1.10
P1.11
P1.12
P1.13
P1.14
P1.15
Tag-Connect Debug Port
C137 0.1uF
TC2030-IDC-NL
For use with Tag-Connect TC2030-CTX-NL
RTC XTAL
X1
XL1
XL2
EEPROM
U7
VCC
HOLD#|RESET# / IO3
WP# / IO2
SO / IO1
SI / IO0
CS#
CLK
GND
C39 0.1uF
nQSPI_CS
QSPI_CLK
QSPI_3
QSPI_2
QSPI_1
QSPI_0
User buttons
R122 1M
R123 1M
NORA_BTN_1
NORA_BTN_2
D22
D23
BTN1 BUTTON 1
BTN2 BUTTON 2
Project: XPLR-IOT-1
Board: C210
Revision: Rev D
Document title: C-210 NORA Module
C210_0002_NORA_Module.SchDoc
DWG Num: 1
Last Modified: 2:42:50 PM 11/7/2022
Page: 2 / 7

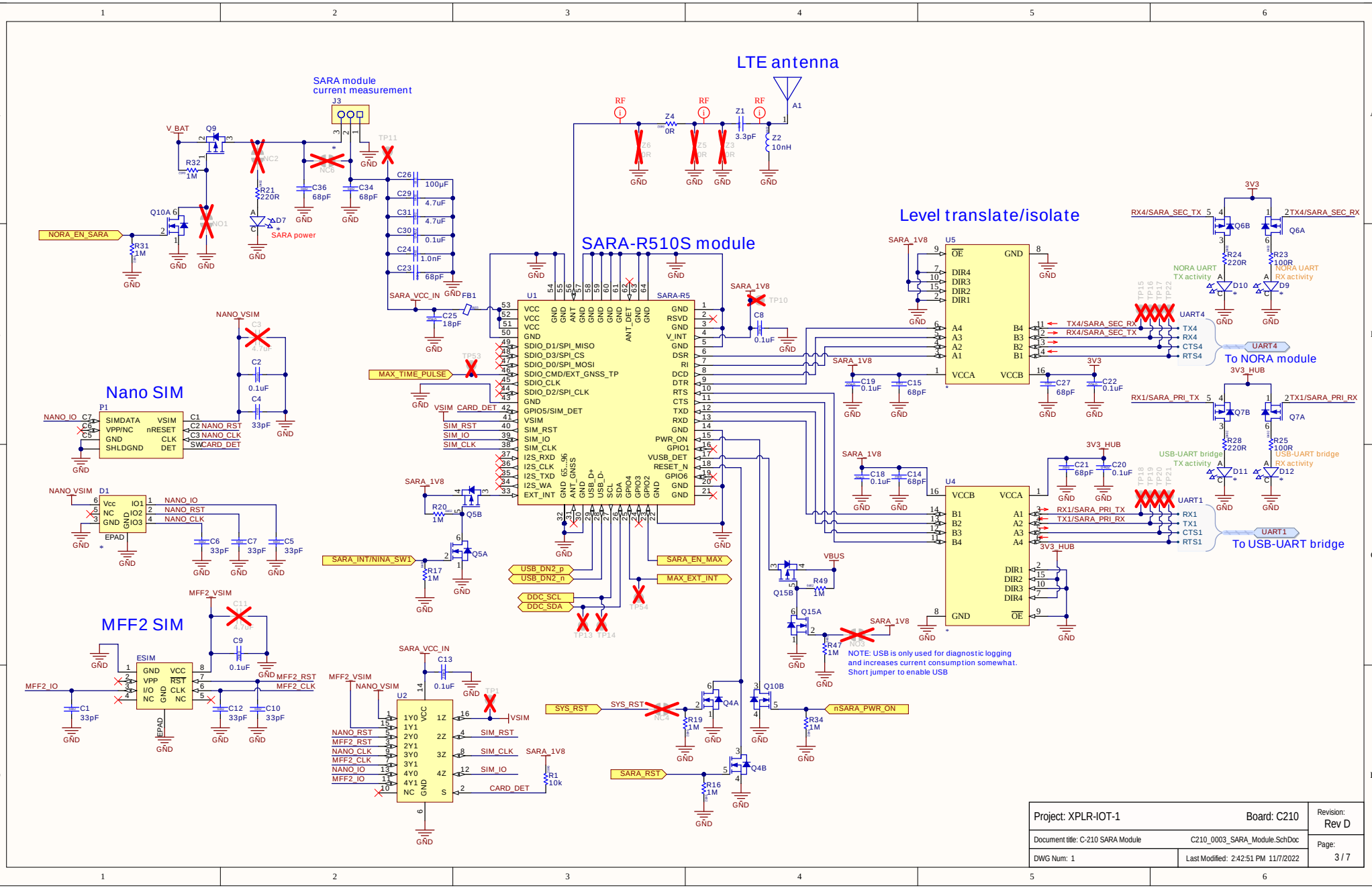
LTE antenna
SARA module current measurement
SARA-R510S module
Level translate/isolate
Nano SIM
MFF2 SIM
To NORA module
To USB-UART bridge
NOTE: USB is only used for diagnostic logging and increases current consumption somewhat. Short jumper to enable USB
Project: XPLR-IOT-1
Board: C210
Revision: Rev D
Document title: C-210 SARA Module
C210_0003_SARA_Module.SchDoc
DWG Num: 1
Last Modified: 2:42:51 PM 11/7/2022
Page: 3 / 7

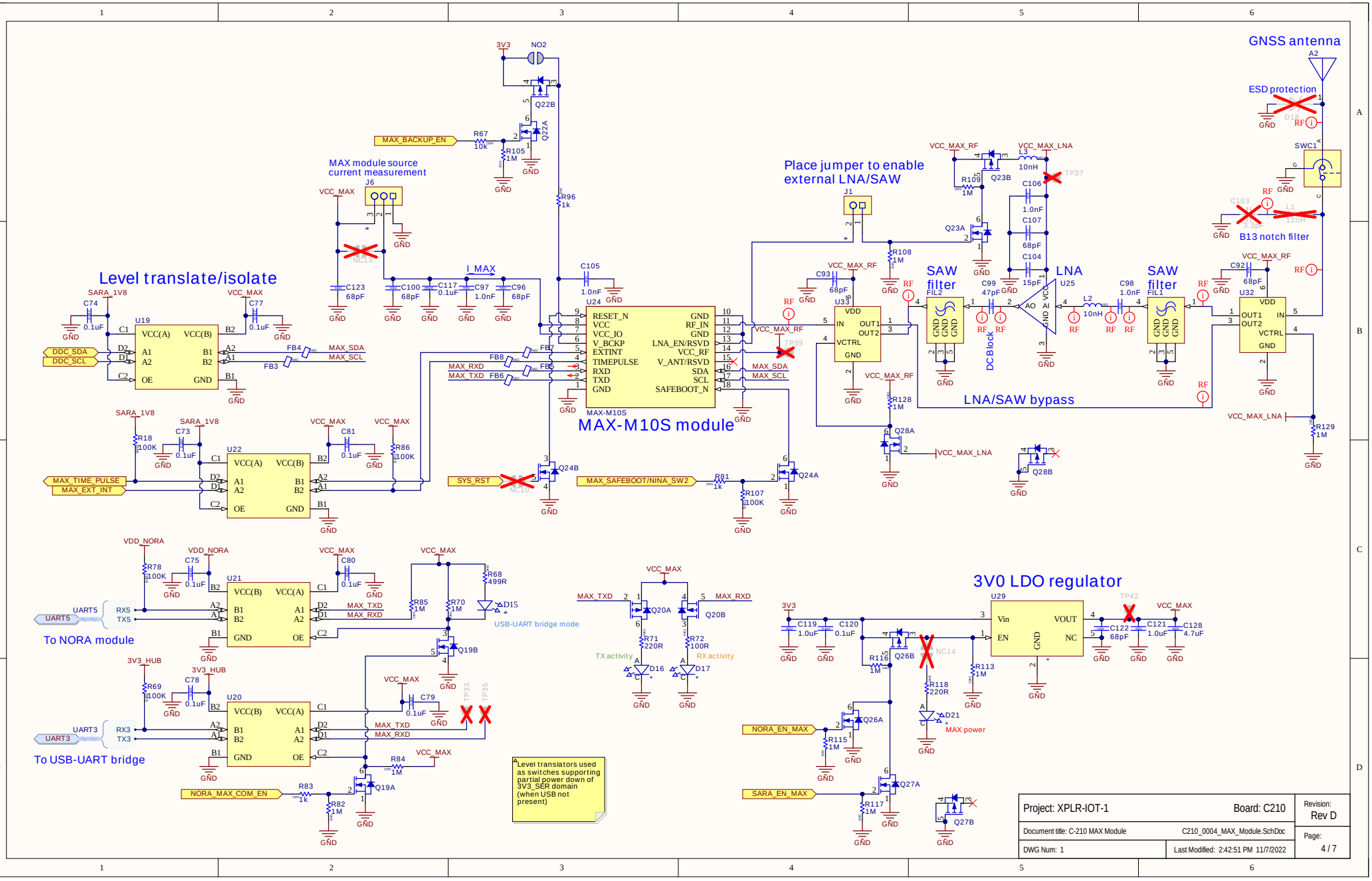
GNSS antenna
ESD protection
B13 notch filter
Place jumper to enable external LNA/SAW
MAX module source current measurement
Level translate/isolate
MAX-M10S module
SAW filter
LNA
SAW filter
DC Block
LNA/SAW bypass
3V0 LDO regulator
To NORA module
To USB-UART bridge
USB-UART bridge mode
TX activity
RX activity
MAX power
Level translators used as switches supporting partial power down of 3V3_SER domain (when USB not present)
Project: XPLR-IOT-1
Board: C210
Revision: Rev D
Document title: C-210 MAX Module
C210_0004_MAX_Module.SchDoc
DWG Num: 1
Last Modified: 2:42:51 PM 11/7/2022
Page: 4 / 7

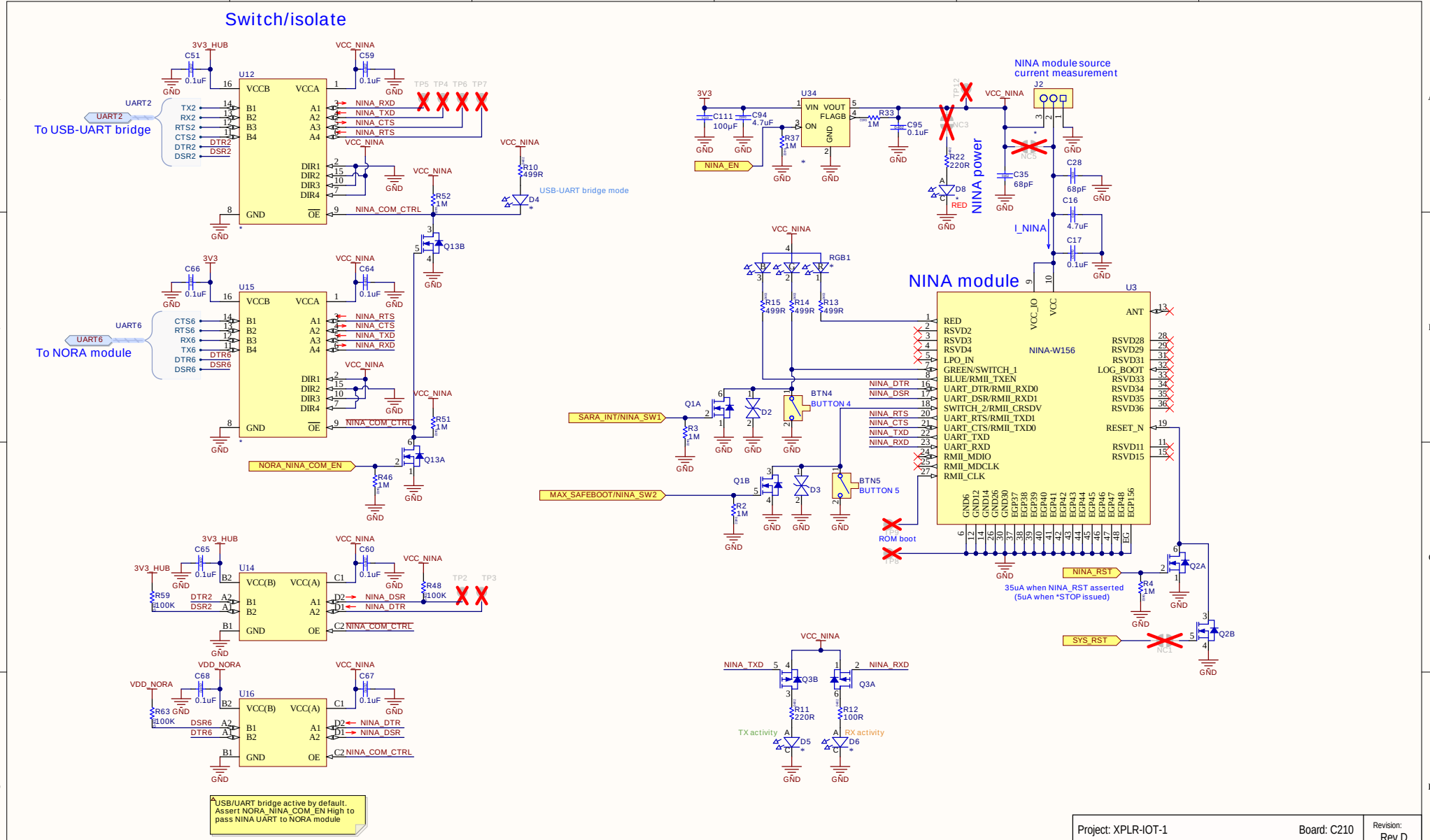
Switch/isolate
To USB-UART bridge
To NORA module
NINA module source current measurement
NINA power
NINA module
USB-UART bridge mode
ROM boot
35uA when NINA_RST asserted (5uA when *STOP issued)
USB/UART bridge active by default. Assert NORA_NINA_COM_EN High to pass NINA UART to NORA module
Project: XPLR-IOT-1
Board: C210
Revision: Rev D
Document title: C-210NINA Module
C210_0005_NINA_Module.SchDoc
DWG Num: 1
Last Modified: 2:42:52 PM 11/7/2022
Page: 5 / 7

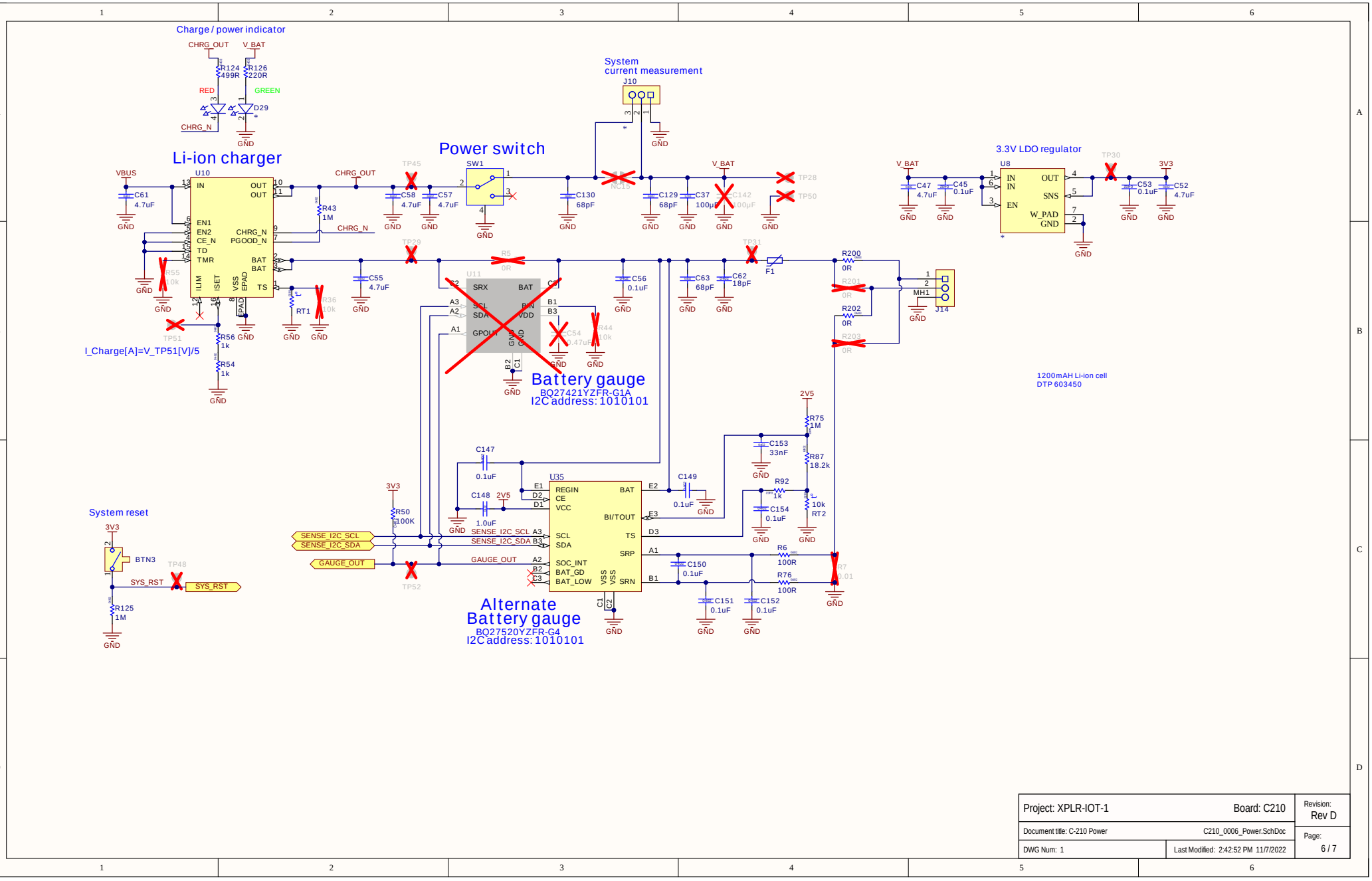

Project: XPLR-IOT-1	Board: C210	Revision: Rev D
Document title: C-210 Power	C210_0006_Power.SchDoc	Page: 6 / 7
DWG Num: 1	Last Modified: 2:42:52 PM 11/7/2022	

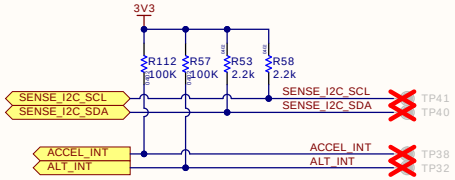

Accelerometer, temperature sensor

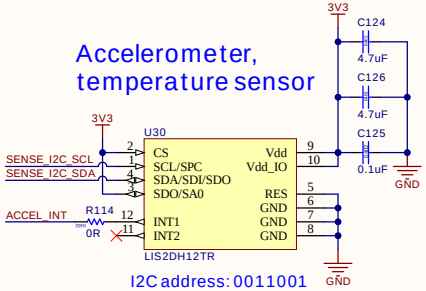

I2C address: 0011001

Alternate accelerometer

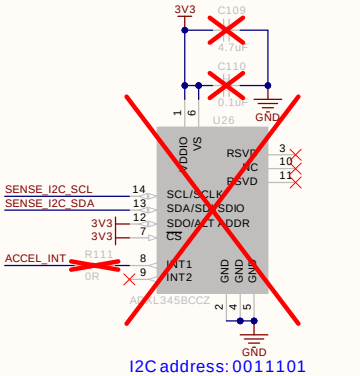

I2C address: 0011101

Gyroscope

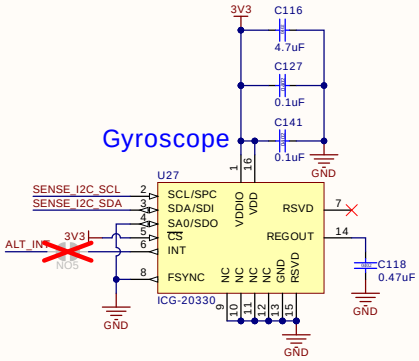

I2C address: 1101000

Humidity, pressure, temperature sensor

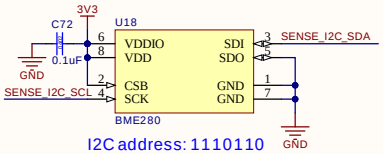

I2C address: 1110110

Alternate humidity sensor

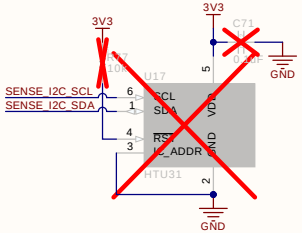

I2C address: 1000000

QWIIC interface

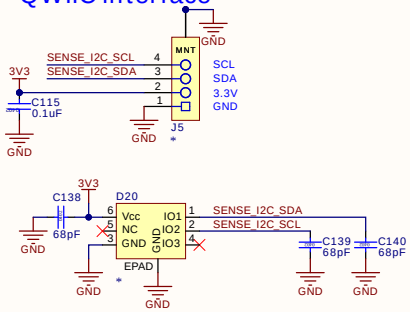

Ambient light sensor

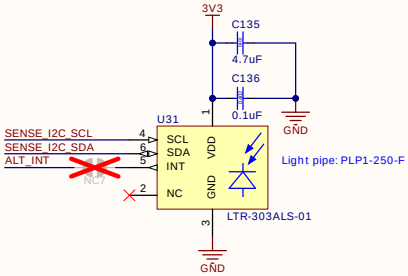

I2C address: 0101001

Magnetometer

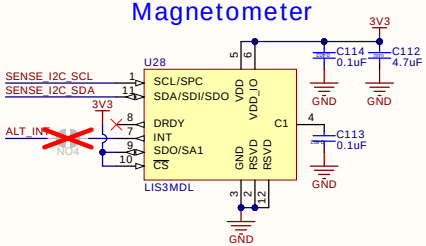

I2C address: 0011110

Project: XPLR-IOT-1	Board: C210	Revision: Rev D
Document title: C-210 Sensors	C210_0007_Sensors.SchDoc	Page: 7 / 7
DWG Num: 1	Last Modified: 2:42:53 PM 11/7/2022	