Schematic/Assembly Revision			
Rev.	Description	Date	By
Rev A	Prototype Release	2022-11-28	habd
Rev B	Prototype Release	2023-05-17	habd

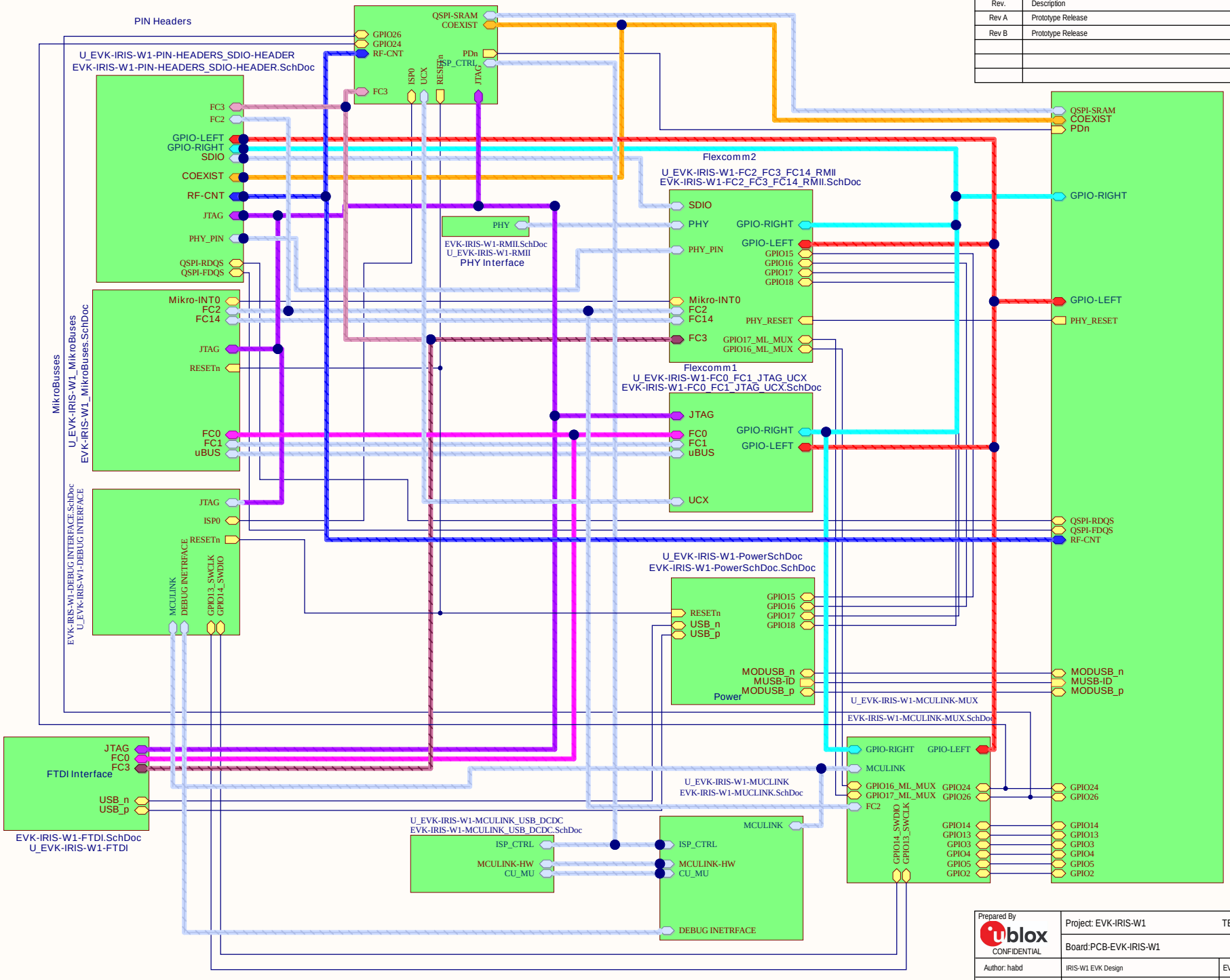

Prepared By u-blox CONFIDENTIAL	Project: EVK-IRIS-W1 TE_WI1	PCB: UBXH60-0001012	Revision: Rev B
	Board:PCB-EVK-IRIS-W1	PCBA: UBXH23-000xxxx	Size: A3
Author: habd	IRIS-W1 EVK Design	EVK-IRIS-W1-TOP SHEET.SchDoc	Page: 1 / 14
Team: Mod-sho	Sch Num:	Release Date: 2023-05-17	

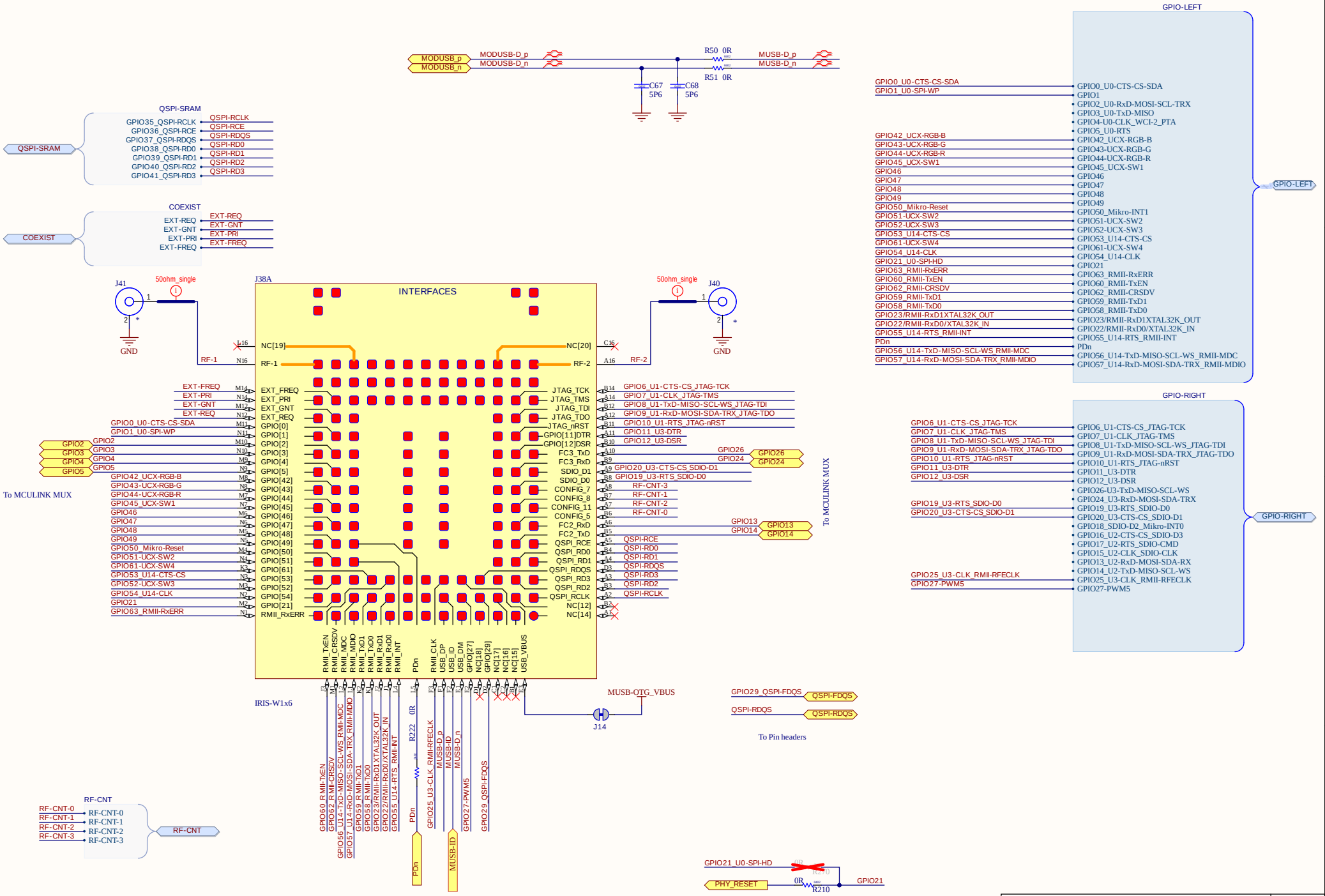
GPIO-LEFT
MODUSB_p
MODUSB_n
MODUSB-D_p
MODUSB-D_n
R50 0R
R51 0R
MUSB-D_p
MUSB-D_n
C67 5P6
C68 5P6
QSPI-SRAM
GPIO35_QSPI-RCLK
GPIO36_QSPI-RCE
GPIO37_QSPI-RDQS
GPIO38_QSPI-RD0
GPIO39_QSPI-RD1
GPIO40_QSPI-RD2
GPIO41_QSPI-RD3
COEXIST
EXT-REQ
EXT-GNT
EXT-PRI
EXT-FREQ
J41
50ohm_single
GND
J38A
INTERFACES
NC[19]
RF-1
NC[20]
RF-2
J40
IRIS-W1x6
To MCULINK MUX
To Pin headers
MUSB-OTG_VBUS
J14
RF-CNT
RF-CNT-0
RF-CNT-1
RF-CNT-2
RF-CNT-3
R222 0R
PDn
MUSB-ID
From OTG
To Reset
GPIO21_U0-SPI-HD
PHY_RESET
R210
GPIO21
GPIO-RIGHT
Project: EVK-IRIS-W1
PCBA:
Revision:
Part Num: EVK-IRIS-W106
EVK-IRIS-W1_MOD.SchDoc
Page:
2 / 14
Sch Num:
Release Date:

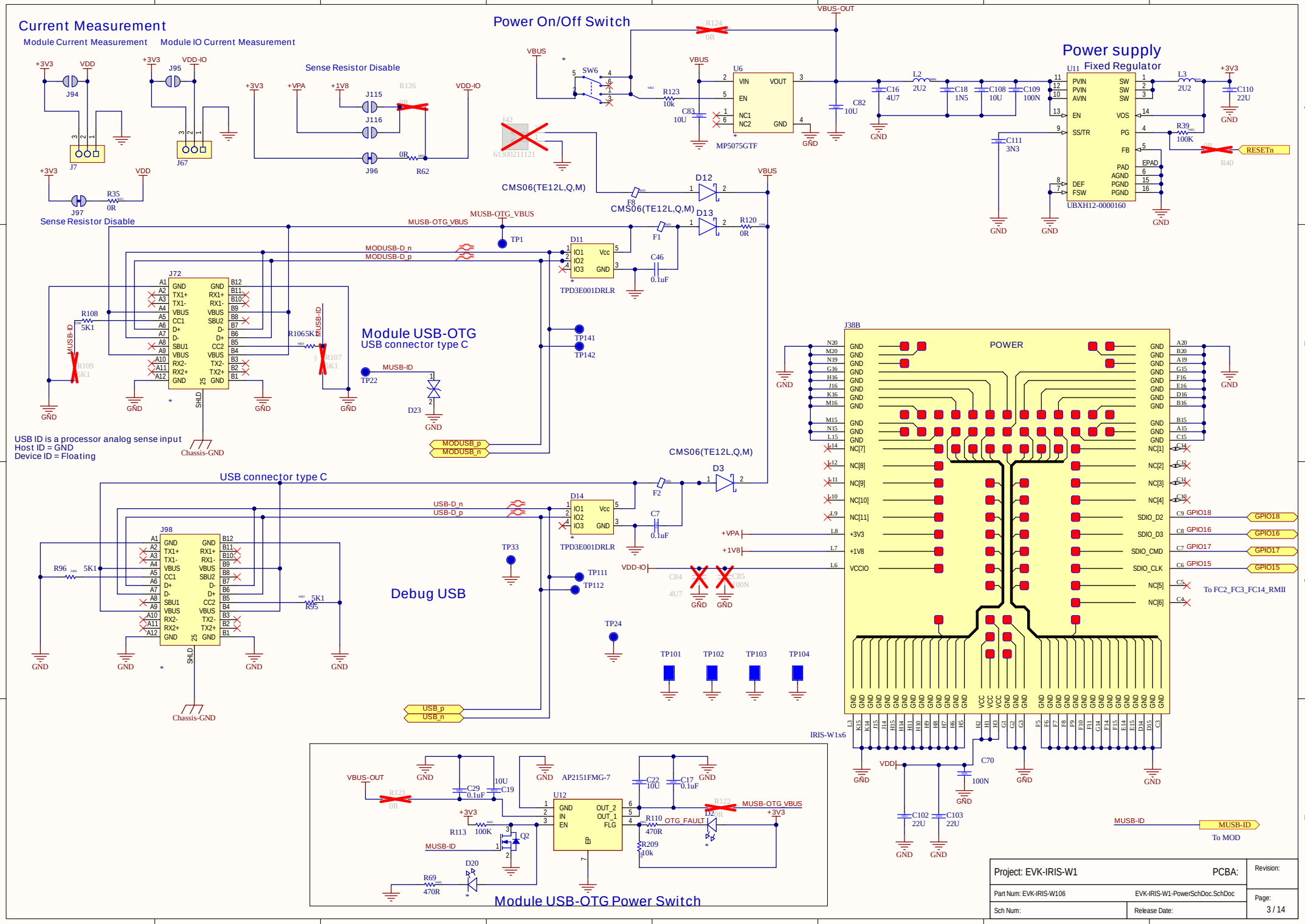
Current Measurement
Module Current Measurement
Module IO Current Measurement
Sense Resistor Disable
Power On/Off Switch
Power supply
Fixed Regulator
U11
UBXH12-0000160
U6
MP5075GTF
SW6
61300211121
CMS06(TE12L,Q,M)
D12
D13
D11
TPD3E001DRLR
J72
Module USB-OTG
USB connector type C
MUSB-OTG_VBUS
MODUSB-D_n
MODUSB-D_p
MUSB-ID
USB ID is a processor analog sense input
Host ID = GND
Device ID = Floating
Chassis-GND
J38B
POWER
IRIS-W1x6
GPIO18
GPIO16
GPIO17
GPIO15
To FC2_FC3_FC14_RMII
USB connector type C
J98
D14
D3
USB-D_n
USB-D_p
Debug USB
USB_p
USB_n
TP101
TP102
TP103
TP104
AP2151FMG-7
U12
OTG_FAULT
Module USB-OTG Power Switch
RESETn
To MOD
Project: EVK-IRIS-W1
PCBA:
Revision:
Part Num: EVK-IRIS-W106
EVK-IRIS-W1-PowerSchDoc.SchDoc
Page:
3 / 14
Sch Num:
Release Date:

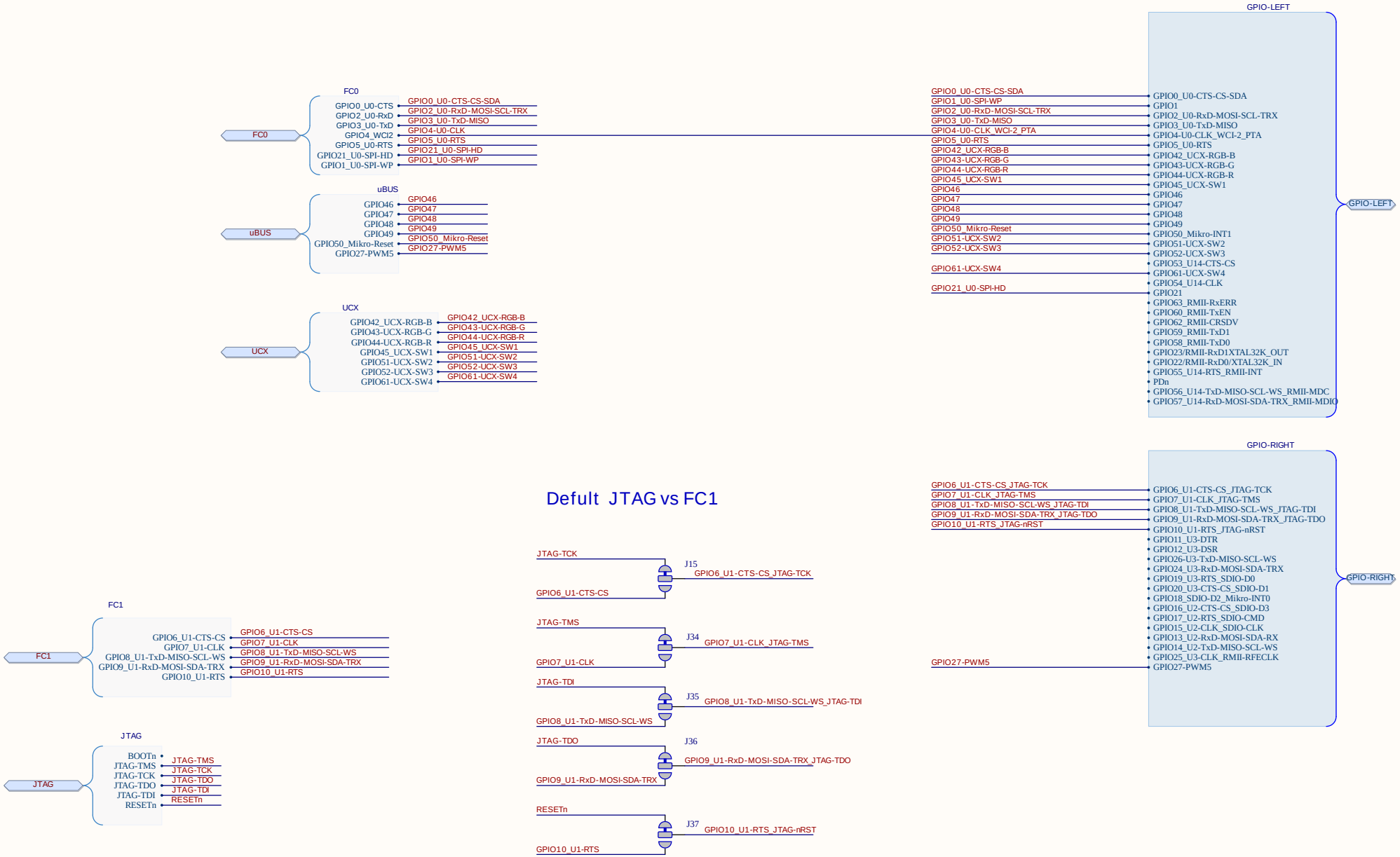

Project: EVK-IRIS-W1	PCBA:	Revision: Rev B
Board:PCB-EVK-IRIS-W1	EVK-IRIS-W1-FC0_FC1_JTAG_UCX.SchDoc	Page: 4 / 14
Sch Num:	Release Date:2023-05-17	

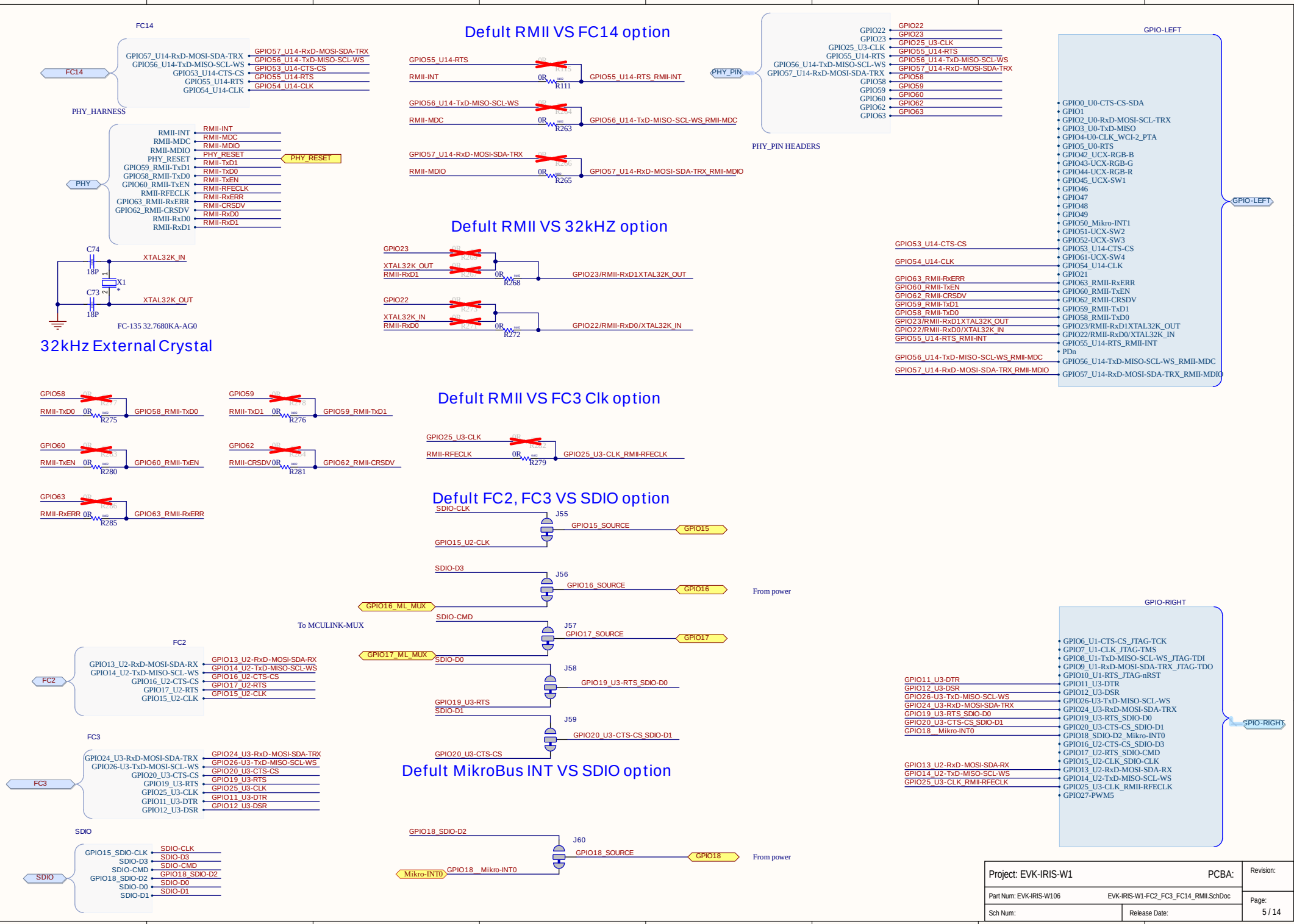
Defult RMII VS FC14 option
FC14
GPIO57_U14-RxD-MOSI-SDA-TRX
GPIO56_U14-TxD-MISO-SCL-WS
GPIO53_U14-CTS-CS
GPIO55_U14-RTS
GPIO54_U14-CLK
PHY_HARNESS
GPIO55_U14-RTS
RMII-INT
R111
GPIO55_U14-RTS_RMII-INT
GPIO56_U14-TxD-MISO-SCL-WS
RMII-MDC
R263
GPIO56_U14-TxD-MISO-SCL-WS_RMII-MDC
GPIO57_U14-RxD-MOSI-SDA-TRX
RMII-MDIO
R265
GPIO57_U14-RxD-MOSI-SDA-TRX_RMII-MDIO
PHY_PIN
GPIO22
GPIO23
GPIO25_U3-CLK
GPIO55_U14-RTS
GPIO56_U14-TxD-MISO-SCL-WS
GPIO57_U14-RxD-MOSI-SDA-TRX
GPIO58
GPIO59
GPIO60
GPIO62
GPIO63
PHY_PIN HEADERS
GPIO-LEFT
GPIO00_U0-CTS-CS-SDA
GPIO1
GPIO2_U0-RxD-MOSI-SCL-TRX
GPIO3_U0-TxD-MISO
GPIO4-U0-CLK_WCI-2_PTA
GPIO5_U0-RTS
GPIO42_UCX-RGB-B
GPIO43-UCX-RGB-G
GPIO44-UCX-RGB-R
GPIO45_UCX-SW1
GPIO46
GPIO47
GPIO48
GPIO49
GPIO50_Mikro-INT1
GPIO51-UCX-SW2
GPIO52-UCX-SW3
GPIO53_U14-CTS-CS
GPIO61-UCX-SW4
GPIO54_U14-CLK
GPIO21
GPIO63_RMII-RxERR
GPIO60_RMII-TxEN
GPIO62_RMII-CRSDV
GPIO59_RMII-TxD1
GPIO58_RMII-TxD0
GPIO23/RMII-RxD1XTAL32K_OUT
GPIO22/RMII-RxD0/XTAL32K_IN
GPIO55_U14-RTS_RMII-INT
PDn
GPIO56_U14-TxD-MISO-SCL-WS_RMII-MDC
GPIO57_U14-RxD-MOSI-SDA-TRX_RMII-MDIO
PHY
RMII-INT
RMII-MDC
RMII-MDIO
PHY_RESET
GPIO59_RMII-TxD1
GPIO58_RMII-TxD0
GPIO60_RMII-TxEN
RMII-RFECLK
GPIO63_RMII-RxERR
GPIO62_RMII-CRSDV
RMII-RxD0
RMII-RxD1
RMII-TxD0
RMII-TxD1
RMII-TxEN
RMII-RxERR
RMII-CRSDV
C74
18P
XTAL32K_IN
X1
C73
XTAL32K_OUT
FC-135 32.7680KA-AG0
32kHz External Crystal
Defult RMII VS 32kHZ option
GPIO23
XTAL32K_OUT
RMII-RxD1
R268
GPIO23/RMII-RxD1XTAL32K_OUT
GPIO22
XTAL32K_IN
RMII-RxD0
R272
GPIO22/RMII-RxD0/XTAL32K_IN
Defult RMII VS FC3 Clk option
GPIO58
RMII-TxD0
R275
GPIO58_RMII-TxD0
GPIO59
RMII-TxD1
R276
GPIO59_RMII-TxD1
GPIO60
RMII-TxEN
R280
GPIO60_RMII-TxEN
GPIO62
RMII-CRSDV
R281
GPIO62_RMII-CRSDV
GPIO63
RMII-RxERR
R285
GPIO63_RMII-RxERR
GPIO25_U3-CLK
RMII-RFECLK
R279
GPIO25_U3-CLK_RMII-RFECLK
Defult FC2, FC3 VS SDIO option
SDIO-CLK
J55
GPIO15_SOURCE
GPIO15
GPIO15_U2-CLK
SDIO-D3
J56
GPIO16_SOURCE
GPIO16
From power
GPIO16_ML_MUX
SDIO-CMD
To MCULINK-MUX
J57
GPIO17_SOURCE
GPIO17
GPIO17_ML_MUX
SDIO-D0
J58
GPIO19_U3-RTS_SDIO-D0
GPIO19_U3-RTS
SDIO-D1
J59
GPIO20_U3-CTS_SDIO-D1
GPIO20_U3-CTS-CS
Defult MikroBus INT VS SDIO option
GPIO18_SDIO-D2
J60
GPIO18_SOURCE
GPIO18
From power
Mikro-INT0
GPIO18__Mikro-INT0
FC2
GPIO13_U2-RxD-MOSI-SDA-RX
GPIO14_U2-TxD-MISO-SCL-WS
GPIO16_U2-CTS-CS
GPIO17_U2-RTS
GPIO15_U2-CLK
FC3
GPIO24_U3-RxD-MOSI-SDA-TRX
GPIO26-U3-TxD-MISO-SCL-WS
GPIO20_U3-CTS-CS
GPIO19_U3-RTS
GPIO25_U3-CLK
GPIO11_U3-DTR
GPIO12_U3-DSR
SDIO
GPIO15_SDIO-CLK
SDIO-D3
SDIO-CMD
GPIO18_SDIO-D2
SDIO-D0
SDIO-D1
GPIO-RIGHT
GPIO6_U1-CTS-CS_JTAG-TCK
GPIO7_U1-CLK_JTAG-TMS
GPIO8_U1-TxD-MISO-SCL-WS_JTAG-TDI
GPIO9_U1-RxD-MOSI-SDA-TRX_JTAG-TDO
GPIO10_U1-RTS_JTAG-nRST
GPIO11_U3-DTR
GPIO12_U3-DSR
GPIO26-U3-TxD-MISO-SCL-WS
GPIO24_U3-RxD-MOSI-SDA-TRX
GPIO19_U3-RTS_SDIO-D0
GPIO20_U3-CTS-CS_SDIO-D1
GPIO18_SDIO-D2_Mikro-INT0
GPIO16_U2-CTS-CS_SDIO-D3
GPIO17_U2-RTS_SDIO-CMD
GPIO15_U2-CLK_SDIO-CLK
GPIO13_U2-RxD-MOSI-SDA-RX
GPIO14_U2-TxD-MISO-SCL-WS
GPIO25_U3-CLK_RMII-RFECLK
GPIO27-PWM5
SPIO-RIGHT
Project: EVK-IRIS-W1
PCBA:
Revision:
Part Num: EVK-IRIS-W106
EVK-IRIS-W1-FC2_FC3_FC14_RMII.SchDoc
Page:
5 / 14
Sch Num:
Release Date:

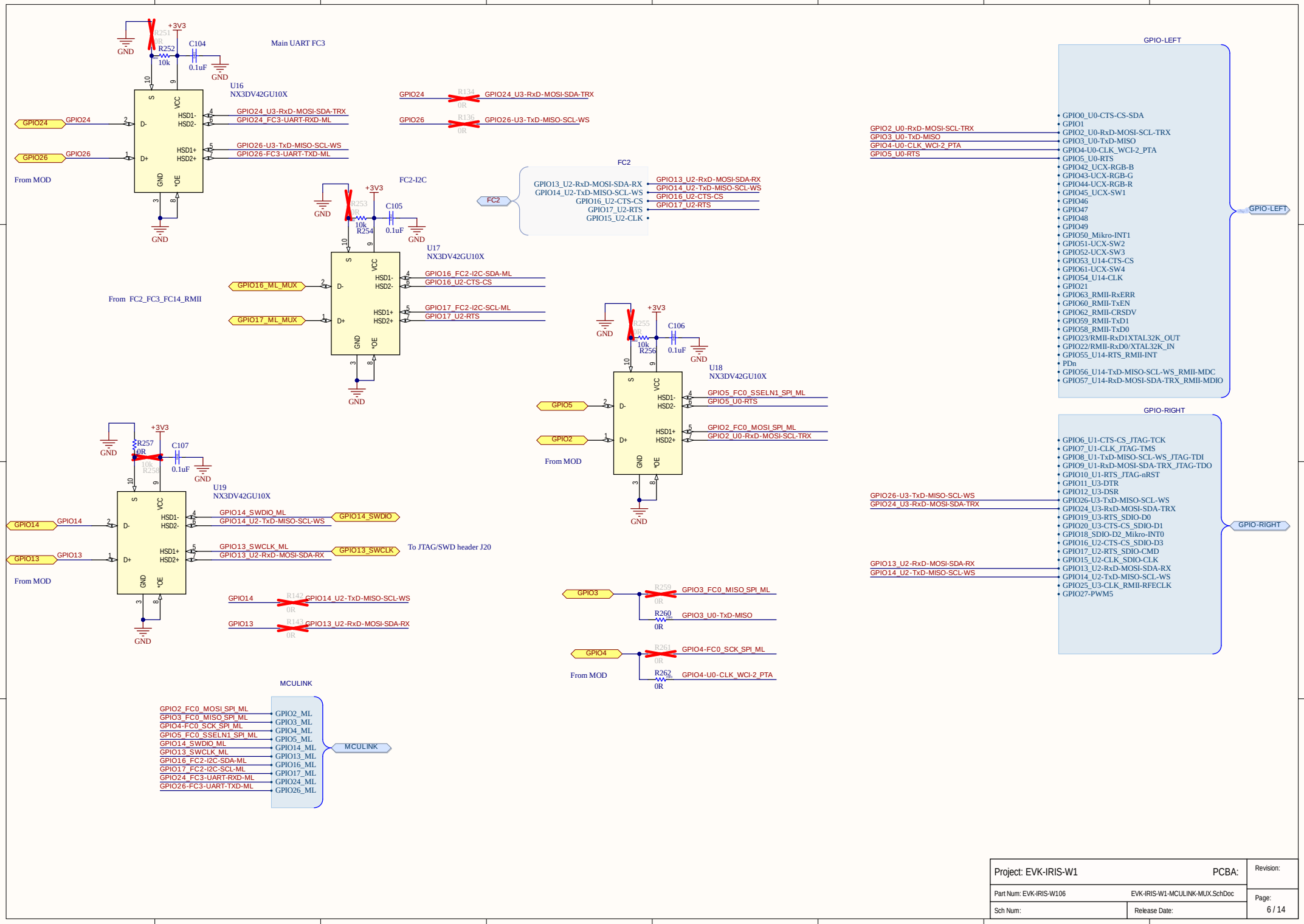
Main UART FC3
U16
NX3DV42GU10X
R251 0R
R252 10k
C104 0.1uF
+3V3
GND
GPIO24
GPIO26
From MOD
GPIO24_U3-RxD-MOSI-SDA-TRX
GPIO24_FC3-UART-RXD-ML
GPIO26-U3-TxD-MISO-SCL-WS
GPIO26-FC3-UART-TXD-ML
R134 0R
R136 0R
GPIO24_U3-RxD-MOSI-SDA-TRX
GPIO26-U3-TxD-MISO-SCL-WS
FC2-I2C
U17
NX3DV42GU10X
R253 0R
R254 10k
C105 0.1uF
GPIO16_ML_MUX
GPIO17_ML_MUX
From FC2_FC3_FC14_RMII
GPIO16_FC2-I2C-SDA-ML
GPIO16_U2-CTS-CS
GPIO17_FC2-I2C-SCL-ML
GPIO17_U2-RTS
FC2
GPIO13_U2-RxD-MOSI-SDA-RX
GPIO14_U2-TxD-MISO-SCL-WS
GPIO16_U2-CTS-CS
GPIO17_U2-RTS
GPIO15_U2-CLK
U18
NX3DV42GU10X
R255 0R
R256 10k
C106 0.1uF
GPIO5
GPIO2
GPIO5_FC0_SSELN1_SPI_ML
GPIO5_U0-RTS
GPIO2_FC0_MOSI_SPI_ML
GPIO2_U0-RxD-MOSI-SCL-TRX
U19
NX3DV42GU10X
R257 10R
R258 10k
C107 0.1uF
GPIO14
GPIO13
GPIO14_SWDIO_ML
GPIO14_U2-TxD-MISO-SCL-WS
GPIO13_SWCLK_ML
GPIO13_U2-RxD-MOSI-SDA-RX
GPIO14_SWDIO
GPIO13_SWCLK
To JTAG/SWD header J20
R142 0R
R143 0R
GPIO3
GPIO4
R259 0R
R260 0R
R261 0R
R262 0R
GPIO3_FC0_MISO_SPI_ML
GPIO3_U0-TxD-MISO
GPIO4-FC0_SCK_SPI_ML
GPIO4-U0-CLK_WCI-2_PTA
MCULINK
GPIO2_FC0_MOSI_SPI_ML
GPIO3_FC0_MISO_SPI_ML
GPIO4-FC0_SCK_SPI_ML
GPIO5_FC0_SSELN1_SPI_ML
GPIO14_SWDIO_ML
GPIO13_SWCLK_ML
GPIO16_FC2-I2C-SDA-ML
GPIO17_FC2-I2C-SCL-ML
GPIO24_FC3-UART-RXD-ML
GPIO26-FC3-UART-TXD-ML
GPIO2_ML
GPIO3_ML
GPIO4_ML
GPIO5_ML
GPIO14_ML
GPIO13_ML
GPIO16_ML
GPIO17_ML
GPIO24_ML
GPIO26_ML
GPIO-LEFT
GPIO2_U0-RxD-MOSI-SCL-TRX
GPIO3_U0-TxD-MISO
GPIO4-U0-CLK_WCI-2_PTA
GPIO5_U0-RTS
GPIO0_U0-CTS-CS-SDA
GPIO1
GPIO2_U0-RxD-MOSI-SCL-TRX
GPIO3_U0-TxD-MISO
GPIO4-U0-CLK_WCI-2_PTA
GPIO5_U0-RTS
GPIO42_UCX-RGB-B
GPIO43-UCX-RGB-G
GPIO44-UCX-RGB-R
GPIO45_UCX-SW1
GPIO46
GPIO47
GPIO48
GPIO49
GPIO50_Mikro-INT1
GPIO51-UCX-SW2
GPIO52-UCX-SW3
GPIO53_U14-CTS-CS
GPIO61-UCX-SW4
GPIO54_U14-CLK
GPIO21
GPIO63_RMII-RxERR
GPIO60_RMII-TxEN
GPIO62_RMII-CRSDV
GPIO59_RMII-TxD1
GPIO58_RMII-TxD0
GPIO23/RMII-RxD1XTAL32K_OUT
GPIO22/RMII-RxD0/XTAL32K_IN
GPIO55_U14-RTS_RMII-INT
PDn
GPIO56_U14-TxD-MISO-SCL-WS_RMII-MDC
GPIO57_U14-RxD-MOSI-SDA-TRX_RMII-MDIO
GPIO-RIGHT
GPIO26-U3-TxD-MISO-SCL-WS
GPIO24_U3-RxD-MOSI-SDA-TRX
GPIO13_U2-RxD-MOSI-SDA-RX
GPIO14_U2-TxD-MISO-SCL-WS
GPIO6_U1-CTS-CS_JTAG-TCK
GPIO7_U1-CLK_JTAG-TMS
GPIO8_U1-TxD-MISO-SCL-WS_JTAG-TDI
GPIO9_U1-RxD-MOSI-SDA-TRX_JTAG-TDO
GPIO10_U1-RTS_JTAG-nRST
GPIO11_U3-DTR
GPIO12_U3-DSR
GPIO26-U3-TxD-MISO-SCL-WS
GPIO24_U3-RxD-MOSI-SDA-TRX
GPIO19_U3-RTS_SDIO-D0
GPIO20_U3-CTS-CS_SDIO-D1
GPIO18_SDIO-D2_Mikro-INT0
GPIO16_U2-CTS-CS_SDIO-D3
GPIO17_U2-RTS_SDIO-CMD
GPIO15_U2-CLK_SDIO-CLK
GPIO13_U2-RxD-MOSI-SDA-RX
GPIO14_U2-TxD-MISO-SCL-WS
GPIO25_U3-CLK_RMII-RFECLK
GPIO27-PWM5
Project: EVK-IRIS-W1
PCBA:
Revision:
Part Num: EVK-IRIS-W106
EVK-IRIS-W1-MCULINK-MUX.SchDoc
Page:
6 / 14
Sch Num:
Release Date:

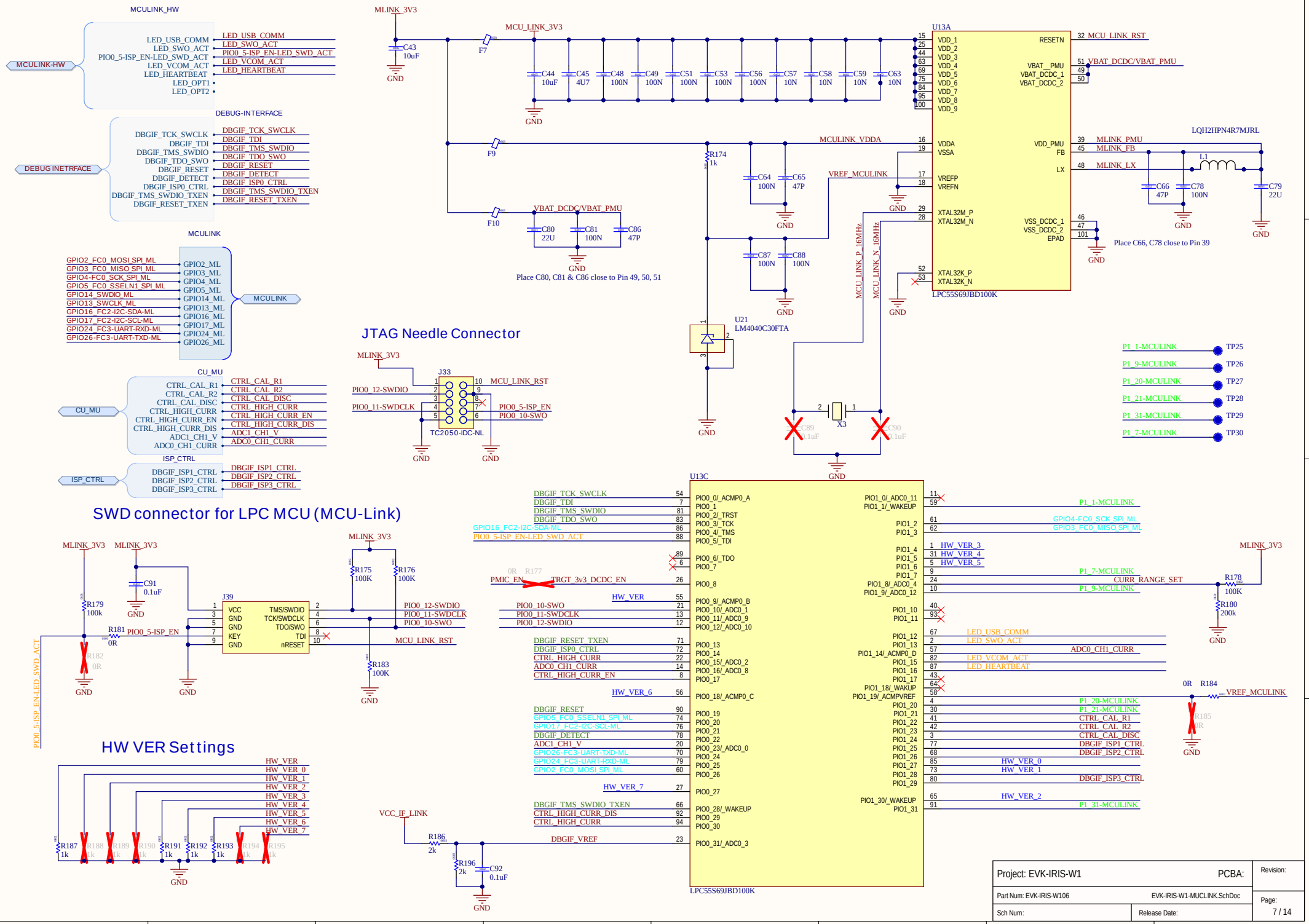
MCULINK_HW
MCULINK-HW
LED_USB_COMM
LED_SWO_ACT
PIO0_5-ISP_EN-LED_SWD_ACT
LED_VCOM_ACT
LED_HEARTBEAT
LED_OPT1
LED_OPT2
DEBUG-INTERFACE
DEBUG INETRFACE
DBGIF_TCK_SWCLK
DBGIF_TDI
DBGIF_TMS_SWDIO
DBGIF_TDO_SWO
DBGIF_RESET
DBGIF_DETECT
DBGIF_ISP0_CTRL
DBGIF_TMS_SWDIO_TXEN
DBGIF_RESET_TXEN
MCULINK
GPIO2_FC0_MOSI SPI_ML
GPIO3_FC0_MISO SPI_ML
GPIO4-FC0_SCK_SPI_ML
GPIO5_FC0_SSELN1_SPI_ML
GPIO14_SWDIO_ML
GPIO13_SWCLK_ML
GPIO16_FC2-I2C-SDA-ML
GPIO17_FC2-I2C-SCL-ML
GPIO24_FC3-UART-RXD-ML
GPIO26-FC3-UART-TXD-ML
GPIO2_ML
GPIO3_ML
GPIO4_ML
GPIO5_ML
GPIO14_ML
GPIO13_ML
GPIO16_ML
GPIO17_ML
GPIO24_ML
GPIO26_ML
CU_MU
CTRL_CAL_R1
CTRL_CAL_R2
CTRL_CAL_DISC
CTRL_HIGH_CURR
CTRL_HIGH_CURR_EN
CTRL_HIGH_CURR_DIS
ADC1_CH1_V
ADC0_CH1_CURR
ISP_CTRL
DBGIF_ISP1_CTRL
DBGIF_ISP2_CTRL
DBGIF_ISP3_CTRL
MLINK_3V3
C43 10uF
GND
MCU_LINK_3V3
F7
F9
F10
C44 10uF
C45 4U7
C48 100N
C49 100N
C51 100N
C53 100N
C56 100N
C57 10N
C58 10N
C59 10N
C63 10N
U13A
LPC55S69JBD100K
RESETN
MCU_LINK_RST
VBAT_PMU
VBAT_DCDC_1
VBAT_DCDC_2
VBAT_DCDC/VBAT_PMU
VDD_PMU
FB
LX
MLINK_PMU
MLINK_FB
MLINK_LX
LQH2HPN4R7MJRL
L1
C66 47P
C78 100N
C79 22U
Place C66, C78 close to Pin 39
VDDA
VSSA
MCULINK_VDDA
VREFP
VREFN
VREF_MCULINK
XTAL32M_P
XTAL32M_N
XTAL32K_P
XTAL32K_N
VSS_DCDC_1
VSS_DCDC_2
EPAD
R174 1k
C64 100N
C65 47P
C87 100N
C88 100N
C80 22U
C81 100N
C86 47P
Place C80, C81 & C86 close to Pin 49, 50, 51
MCU_LINK_P_16MHz
MCU_LINK_N_16MHz
U21
LM4040C30FTA
X3
C89 0.1uF
C90 0.1uF
P1_1-MCULINK
P1_9-MCULINK
P1_20-MCULINK
P1_21-MCULINK
P1_31-MCULINK
P1_7-MCULINK
TP25
TP26
TP27
TP28
TP29
TP30
JTAG Needle Connector
J33
TC2050-IDC-NL
PIO0_12-SWDIO
PIO0_11-SWDCLK
PIO0_5-ISP_EN
PIO0_10-SWO
SWD connector for LPC MCU (MCU-Link)
J39
VCC
GND
KEY
TMS/SWDIO
TCK/SWDCLK
TDO/SWO
TDI
nRESET
C91 0.1uF
R179 100k
R181 0R
R182 0R
R175 100K
R176 100K
R183 100K
PIO0_5-ISP_EN-LED_SWD_ACT
HW VER Settings
HW_VER
HW_VER_0
HW_VER_1
HW_VER_2
HW_VER_3
HW_VER_4
HW_VER_5
HW_VER_6
HW_VER_7
R187 1k
R188 1k
R189 1k
R190 1k
R191 1k
R192 1k
R193 1k
R194 1k
R195 1k
VCC_IF_LINK
R186 2k
R196 2k
C92 0.1uF
DBGIF_VREF
U13C
LPC55S69JBD100K
PIO0_0/_ACMP0_A
PIO0_1
PIO0_2/_TRST
PIO0_3/_TCK
PIO0_4/_TMS
PIO0_5/_TDI
PIO0_6/_TDO
PIO0_7
PIO0_8
PIO0_9/_ACMP0_B
PIO0_10/_ADC0_1
PIO0_11/_ADC0_9
PIO0_12/_ADC0_10
PIO0_13
PIO0_14
PIO0_15/_ADC0_2
PIO0_16/_ADC0_8
PIO0_17
PIO0_18/_ACMP0_C
PIO0_19
PIO0_20
PIO0_21
PIO0_22
PIO0_23/_ADC0_0
PIO0_24
PIO0_25
PIO0_26
PIO0_27
PIO0_28/_WAKEUP
PIO0_29
PIO0_30
PIO0_31/_ADC0_3
PIO1_0/_ADC0_11
PIO1_1/_WAKEUP
PIO1_2
PIO1_3
PIO1_4
PIO1_5
PIO1_6
PIO1_7
PIO1_8/_ADC0_4
PIO1_9/_ADC0_12
PIO1_10
PIO1_11
PIO1_12
PIO1_13
PIO1_14/_ACMP0_D
PIO1_15
PIO1_16
PIO1_17
PIO1_18/_WAKUP
PIO1_19/_ACMPVREF
PIO1_20
PIO1_21
PIO1_22
PIO1_23
PIO1_24
PIO1_25
PIO1_26
PIO1_27
PIO1_28
PIO1_29
PIO1_30/_WAKEUP
PIO1_31
DBGIF_TCK_SWCLK
DBGIF_TDI
DBGIF_TMS_SWDIO
DBGIF_TDO_SWO
GPIO16_FC2-I2C-SDA-ML
PIO0_5-ISP_EN-LED_SWD_ACT
PMIC_EN
TRGT_3v3_DCDC_EN
HW_VER
PIO0_10-SWO
PIO0_11-SWDCLK
PIO0_12-SWDIO
DBGIF_RESET_TXEN
DBGIF_ISP0_CTRL
CTRL_HIGH_CURR
ADC0_CH1_CURR
CTRL_HIGH_CURR_EN
HW_VER_6
DBGIF_RESET
GPIO5_FC0_SSELN1_SPI_ML
GPIO17_FC2-I2C-SCL-ML
DBGIF_DETECT
ADC1_CH1_V
GPIO26-FC3-UART-TXD-ML
GPIO24_FC3-UART-RXD-ML
GPIO2_FC0_MOSI_SPI_ML
HW_VER_7
DBGIF_TMS_SWDIO_TXEN
CTRL_HIGH_CURR_DIS
CTRL_HIGH_CURR
P1_1-MCULINK
GPIO4-FC0_SCK_SPI_ML
GPIO3_FC0_MISO_SPI_ML
HW_VER_3
HW_VER_4
HW_VER_5
P1_7-MCULINK
CURR_RANGE_SET
P1_9-MCULINK
R178 100K
R180 200k
LED_USB_COMM
LED_SWO_ACT
ADC0_CH1_CURR
LED_VCOM_ACT
LED_HEARTBEAT
0R R184
VREF_MCULINK
R185 0R
P1_20-MCULINK
P1_21-MCULINK
CTRL_CAL_R1
CTRL_CAL_R2
CTRL_CAL_DISC
DBGIF_ISP1_CTRL
DBGIF_ISP2_CTRL
HW_VER_0
HW_VER_1
DBGIF_ISP3_CTRL
HW_VER_2
P1_31-MCULINK
Project: EVK-IRIS-W1
PCBA:
Revision:
Part Num: EVK-IRIS-W106
EVK-IRIS-W1-MUCLINK.SchDoc
Sch Num:
Release Date:
Page:
7 / 14

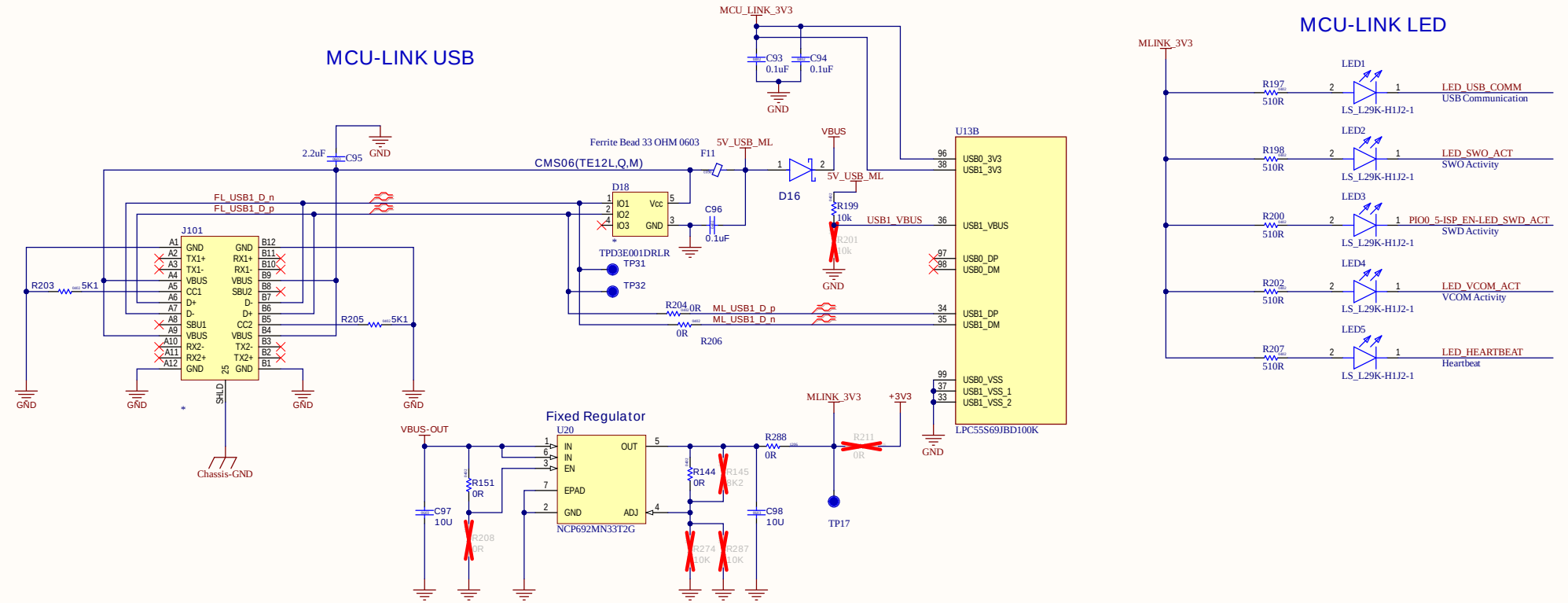

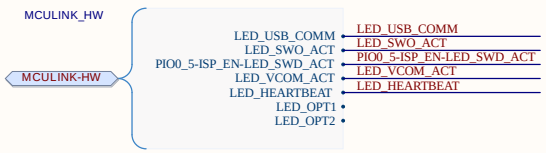

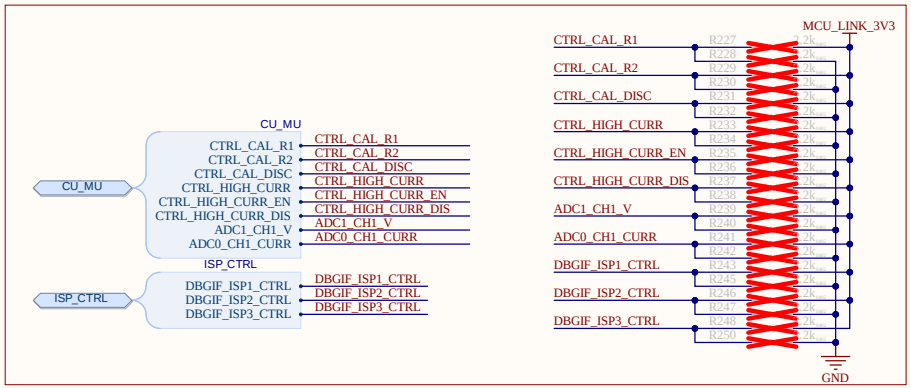

Project: EVK-IRIS-W1	PCBA:	Revision:
Part Num: EVK-IRIS-W106	EVK-IRIS-W1-MCULINK_USB_DCDC.SchDoc	Page: 8 / 14
Sch Num:	Release Date:	

FTDI USB-UART

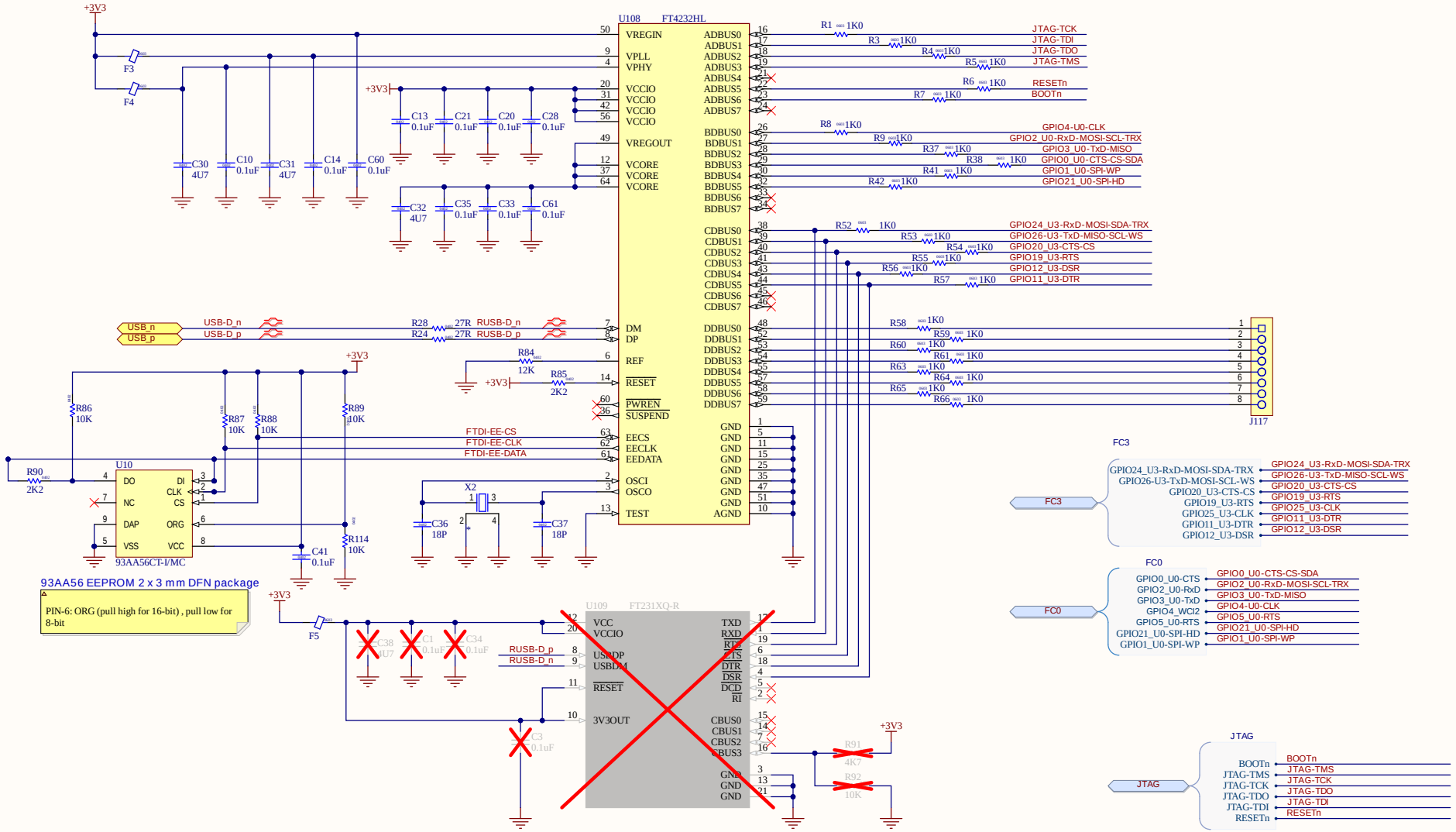

Project: EVK-IRIS-W1	PCBA:	Revision:
Part Num: EVK-IRIS-W106	EVK-IRIS-W1-FTDI.SchDoc	Page: 9 / 14
Sch Num:	Release Date:	

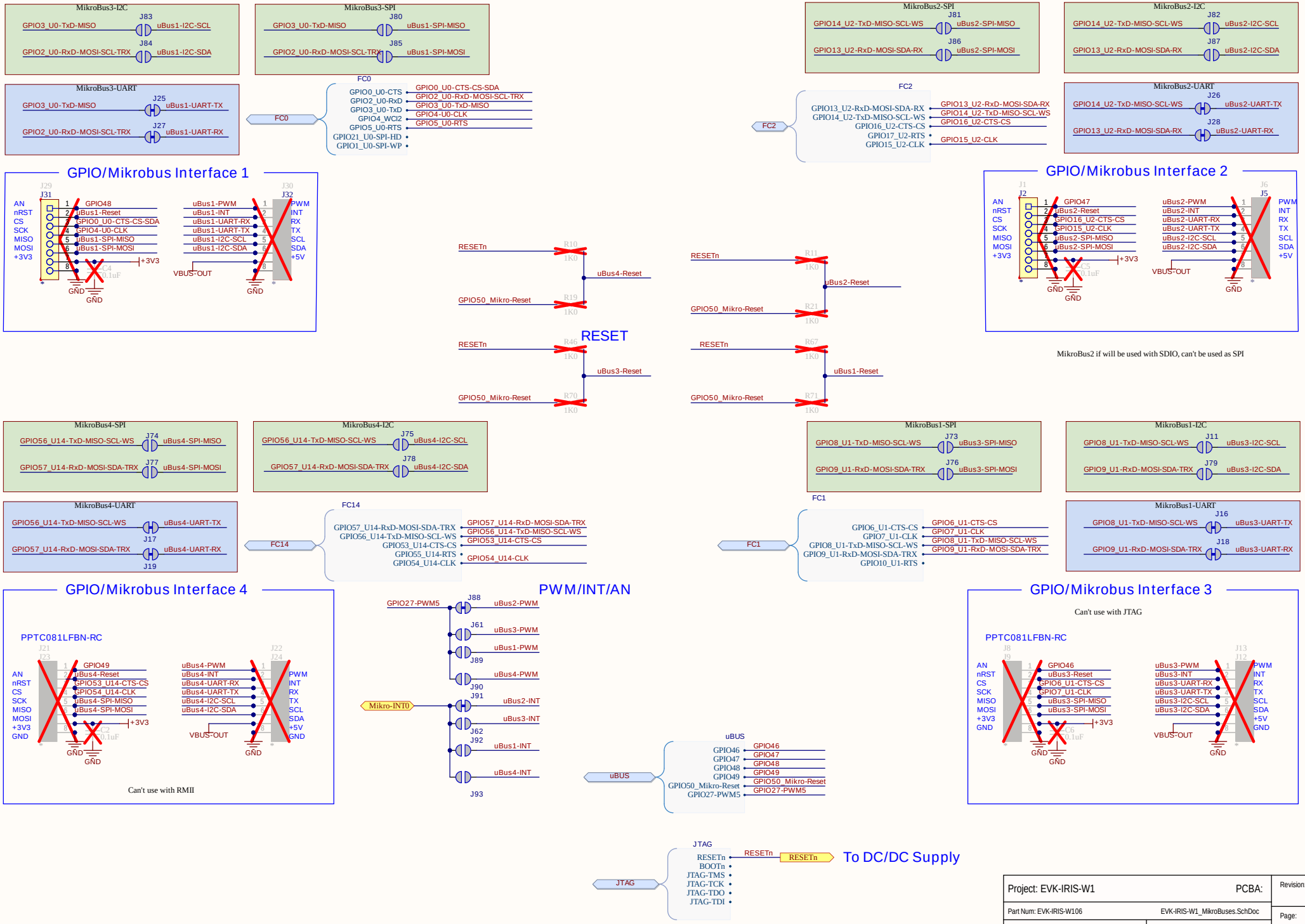
MikroBus3-I2C
GPIO3_U0-TxD-MISO
J83
uBus1-I2C-SCL
GPIO2_U0-RxD-MOSI-SCL-TRX
J84
uBus1-I2C-SDA
MikroBus3-SPI
GPIO3_U0-TxD-MISO
J80
uBus1-SPI-MISO
GPIO2_U0-RxD-MOSI-SCL-TRX
J85
uBus1-SPI-MOSI
MikroBus2-SPI
GPIO14_U2-TxD-MISO-SCL-WS
J81
uBus2-SPI-MISO
GPIO13_U2-RxD-MOSI-SDA-RX
J86
uBus2-SPI-MOSI
MikroBus2-I2C
GPIO14_U2-TxD-MISO-SCL-WS
J82
uBus2-I2C-SCL
GPIO13_U2-RxD-MOSI-SDA-RX
J87
uBus2-I2C-SDA
MikroBus3-UART
GPIO3_U0-TxD-MISO
J25
uBus1-UART-TX
GPIO2_U0-RxD-MOSI-SCL-TRX
J27
uBus1-UART-RX
FC0
GPIO0_U0-CTS
GPIO2_U0-RxD
GPIO3_U0-TxD
GPIO4_WCI2
GPIO5_U0-RTS
GPIO21_U0-SPI-HD
GPIO1_U0-SPI-WP
GPIO0_U0-CTS-CS-SDA
GPIO2_U0-RxD-MOSI-SCL-TRX
GPIO3_U0-TxD-MISO
GPIO4_U0-CLK
GPIO5_U0-RTS
FC2
GPIO13_U2-RxD-MOSI-SDA-RX
GPIO14_U2-TxD-MISO-SCL-WS
GPIO16_U2-CTS-CS
GPIO17_U2-RTS
GPIO15_U2-CLK
GPIO13_U2-RxD-MOSI-SDA-RX
GPIO14_U2-TxD-MISO-SCL-WS
GPIO16_U2-CTS-CS
GPIO15_U2-CLK
MikroBus2-UART
GPIO14_U2-TxD-MISO-SCL-WS
J26
uBus2-UART-TX
GPIO13_U2-RxD-MOSI-SDA-RX
J28
uBus2-UART-RX
GPIO/Mikrobus Interface 1
J29
J31
AN
nRST
CS
SCK
MISO
MOSI
+3V3
GPIO48
uBus1-Reset
GPIO0_U0-CTS-CS-SDA
GPIO4-U0-CLK
uBus1-SPI-MISO
uBus1-SPI-MOSI
C4
0.1uF
GND
J30
J32
uBus1-PWM
uBus1-INT
uBus1-UART-RX
uBus1-UART-TX
uBus1-I2C-SCL
uBus1-I2C-SDA
VBUS-OUT
PWM
INT
RX
TX
SCL
SDA
+5V
RESETn
R10
1K0
uBus4-Reset
GPIO50_Mikro-Reset
R19
1K0
RESETn
R46
1K0
uBus3-Reset
GPIO50_Mikro-Reset
R70
1K0
RESET
RESETn
R11
1K0
uBus2-Reset
GPIO50_Mikro-Reset
R21
1K0
RESETn
R67
1K0
uBus1-Reset
GPIO50_Mikro-Reset
R71
1K0
GPIO/Mikrobus Interface 2
J1
J2
AN
nRST
CS
SCK
MISO
MOSI
+3V3
GPIO47
uBus2-Reset
GPIO16_U2-CTS-CS
GPIO15_U2-CLK
uBus2-SPI-MISO
uBus2-SPI-MOSI
C5
0.1uF
GND
J6
J5
uBus2-PWM
uBus2-INT
uBus2-UART-RX
uBus2-UART-TX
uBus2-I2C-SCL
uBus2-I2C-SDA
VBUS-OUT
PWM
INT
RX
TX
SCL
SDA
+5V
MikroBus2 if will be used with SDIO, can't be used as SPI
MikroBus4-SPI
GPIO56_U14-TxD-MISO-SCL-WS
J74
uBus4-SPI-MISO
GPIO57_U14-RxD-MOSI-SDA-TRX
J77
uBus4-SPI-MOSI
MikroBus4-I2C
GPIO56_U14-TxD-MISO-SCL-WS
J75
uBus4-I2C-SCL
GPIO57_U14-RxD-MOSI-SDA-TRX
J78
uBus4-I2C-SDA
MikroBus1-SPI
GPIO8_U1-TxD-MISO-SCL-WS
J73
uBus3-SPI-MISO
GPIO9_U1-RxD-MOSI-SDA-TRX
J76
uBus3-SPI-MOSI
MikroBus1-I2C
GPIO8_U1-TxD-MISO-SCL-WS
J11
uBus3-I2C-SCL
GPIO9_U1-RxD-MOSI-SDA-TRX
J79
uBus3-I2C-SDA
MikroBus4-UART
GPIO56_U14-TxD-MISO-SCL-WS
uBus4-UART-TX
J17
GPIO57_U14-RxD-MOSI-SDA-TRX
uBus4-UART-RX
J19
FC14
GPIO57_U14-RxD-MOSI-SDA-TRX
GPIO56_U14-TxD-MISO-SCL-WS
GPIO53_U14-CTS-CS
GPIO55_U14-RTS
GPIO54_U14-CLK
GPIO57_U14-RxD-MOSI-SDA-TRX
GPIO56_U14-TxD-MISO-SCL-WS
GPIO53_U14-CTS-CS
GPIO54_U14-CLK
FC1
GPIO6_U1-CTS-CS
GPIO7_U1-CLK
GPIO8_U1-TxD-MISO-SCL-WS
GPIO9_U1-RxD-MOSI-SDA-TRX
GPIO10_U1-RTS
GPIO6_U1-CTS-CS
GPIO7_U1-CLK
GPIO8_U1-TxD-MISO-SCL-WS
GPIO9_U1-RxD-MOSI-SDA-TRX
MikroBus1-UART
GPIO8_U1-TxD-MISO-SCL-WS
J16
uBus3-UART-TX
GPIO9_U1-RxD-MOSI-SDA-TRX
J18
uBus3-UART-RX
GPIO/Mikrobus Interface 4
PPTC081LFBN-RC
J21
J23
AN
nRST
CS
SCK
MISO
MOSI
+3V3
GND
GPIO49
uBus4-Reset
GPIO53_U14-CTS-CS
GPIO54_U14-CLK
uBus4-SPI-MISO
uBus4-SPI-MOSI
C2
0.1uF
GND
J22
J24
uBus4-PWM
uBus4-INT
uBus4-UART-RX
uBus4-UART-TX
uBus4-I2C-SCL
uBus4-I2C-SDA
VBUS-OUT
PWM
INT
RX
TX
SCL
SDA
+5V
GND
Can't use with RMII
PWM/INT/AN
GPIO27-PWM5
J88
uBus2-PWM
J61
uBus3-PWM
uBus1-PWM
J89
uBus4-PWM
J90
J91
Mikro-INT0
uBus2-INT
uBus3-INT
J62
J92
uBus1-INT
uBus4-INT
J93
uBUS
GPIO46
GPIO47
GPIO48
GPIO49
GPIO50_Mikro-Reset
GPIO27-PWM5
GPIO46
GPIO47
GPIO48
GPIO49
GPIO50_Mikro-Reset
GPIO27-PWM5
GPIO/Mikrobus Interface 3
Can't use with JTAG
PPTC081LFBN-RC
J8
J9
AN
nRST
CS
SCK
MISO
MOSI
+3V3
GND
GPIO46
uBus3-Reset
GPIO6_U1-CTS-CS
GPIO7_U1-CLK
uBus3-SPI-MISO
uBus3-SPI-MOSI
C6
0.1uF
GND
J13
J12
uBus3-PWM
uBus3-INT
uBus3-UART-RX
uBus3-UART-TX
uBus3-I2C-SCL
uBus3-I2C-SDA
VBUS-OUT
PWM
INT
RX
TX
SCL
SDA
+5V
GND
JTAG
RESETn
BOOTn
JTAG-TMS
JTAG-TCK
JTAG-TDO
JTAG-TDI
RESETn
RESETn
To DC/DC Supply
Project: EVK-IRIS-W1
PCBA:
Revision:
Part Num: EVK-IRIS-W106
EVK-IRIS-W1_MikroBuses.SchDoc
Page:
10 / 14
Sch Num:
Release Date:

Boot strapping

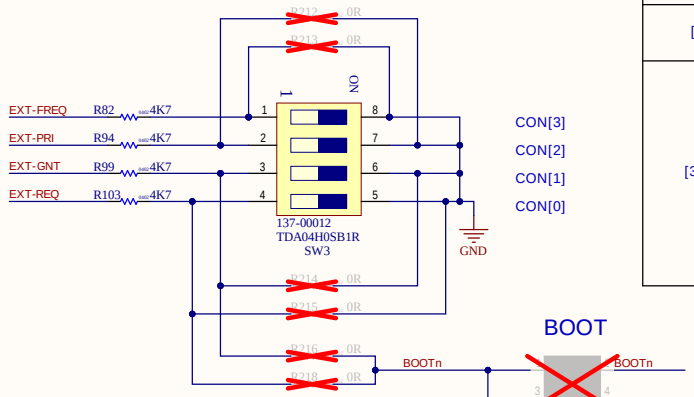

CON	FUNCTION	
[5]	CONFIG XOSC_SEL: RF_CNTL0 Float (Default) : 40 MHz GND : 38.4 MHz	
[3:0]	CONFIG HOST BOOT[3:0]	
	CON [3:0]	Boot
	1111	QSPI Flash (Default)
	1110	ISP
	1101	Serial
	1100	SDIO
	1011	USB
	1010	SPI EEPROM

BOOT

0 - connect to GND

1 - Floating

RESET

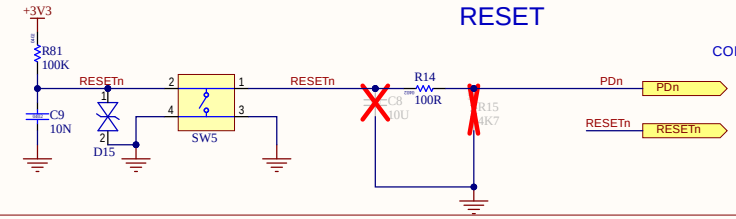

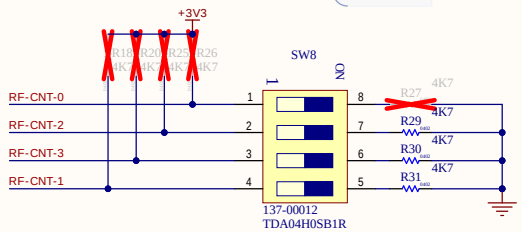

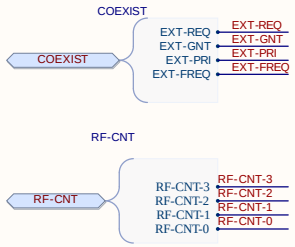

External SPI PSRAM

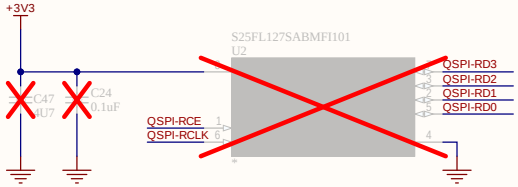

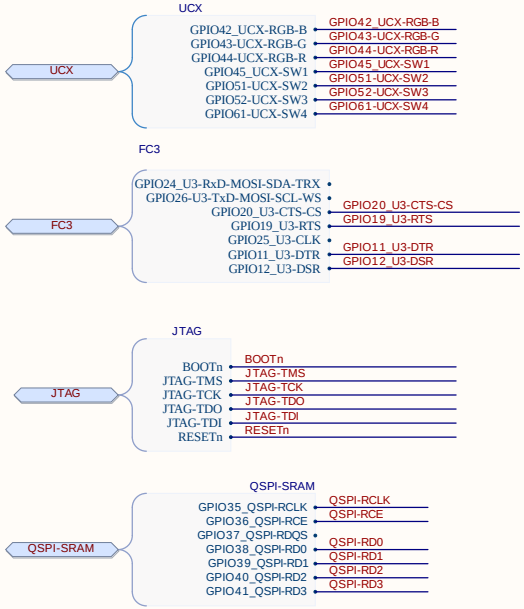

LEDs

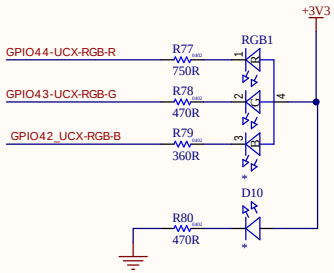

Main DCDC 3V3 LED

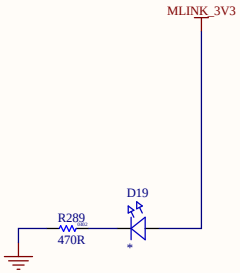

Wake up options

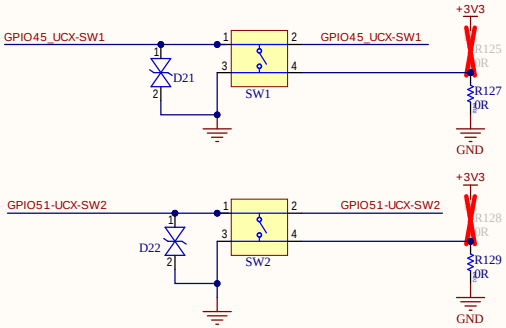

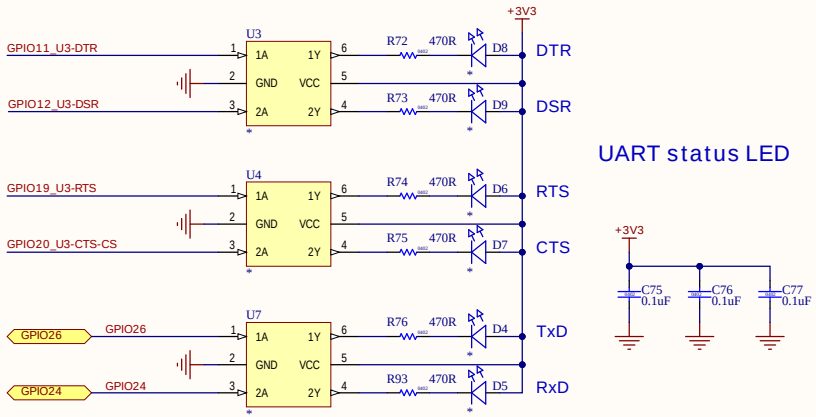

Project: EVK-IRIS-W1	PCBA:	Revision: Rev B
Board:PCB-EVK-IRIS-W1	EVK-IRIS-W1-SRAM_RESET_STRAPING.SchDoc	Page: 11 / 14
Sch Num:	Release Date:2023-05-17	

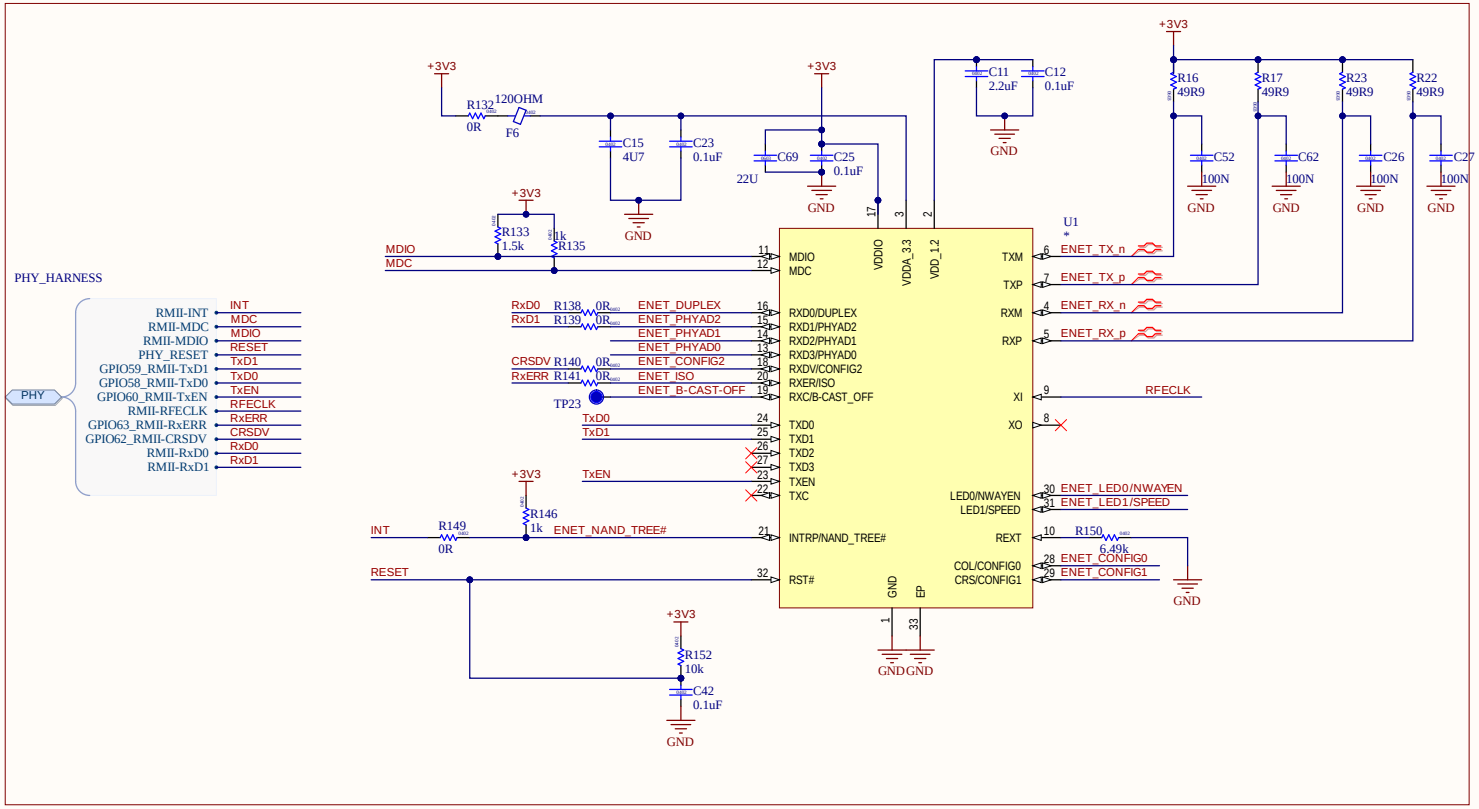

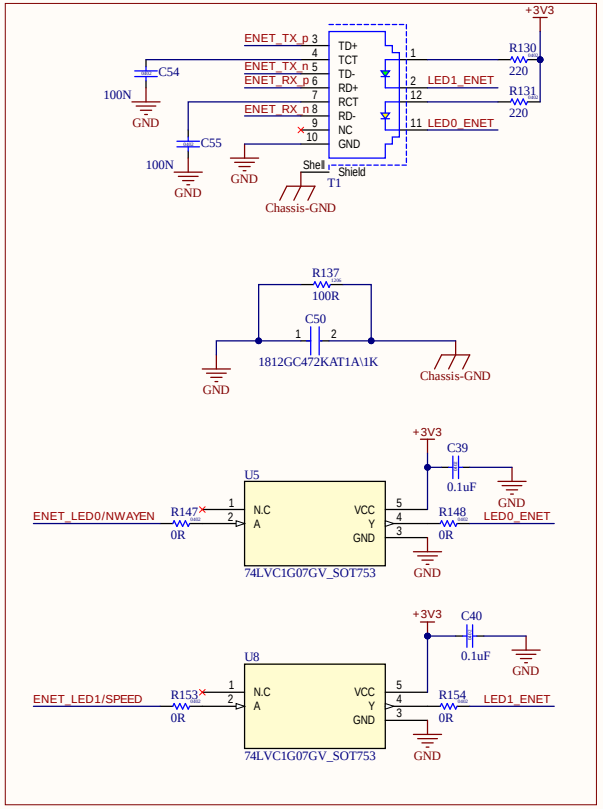

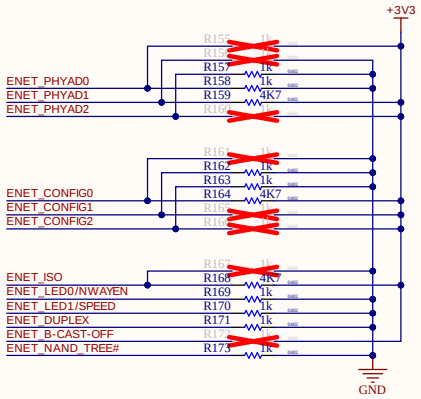

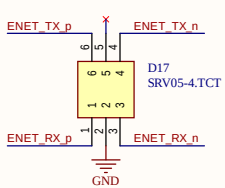

Project: EVK-IRIS-W1	PCBA:	Revision:
Part Num: EVK-IRIS-W106	EVK-IRIS-W1-RMII.SchDoc	Page: 12 / 14
Sch Num:	Release Date:	

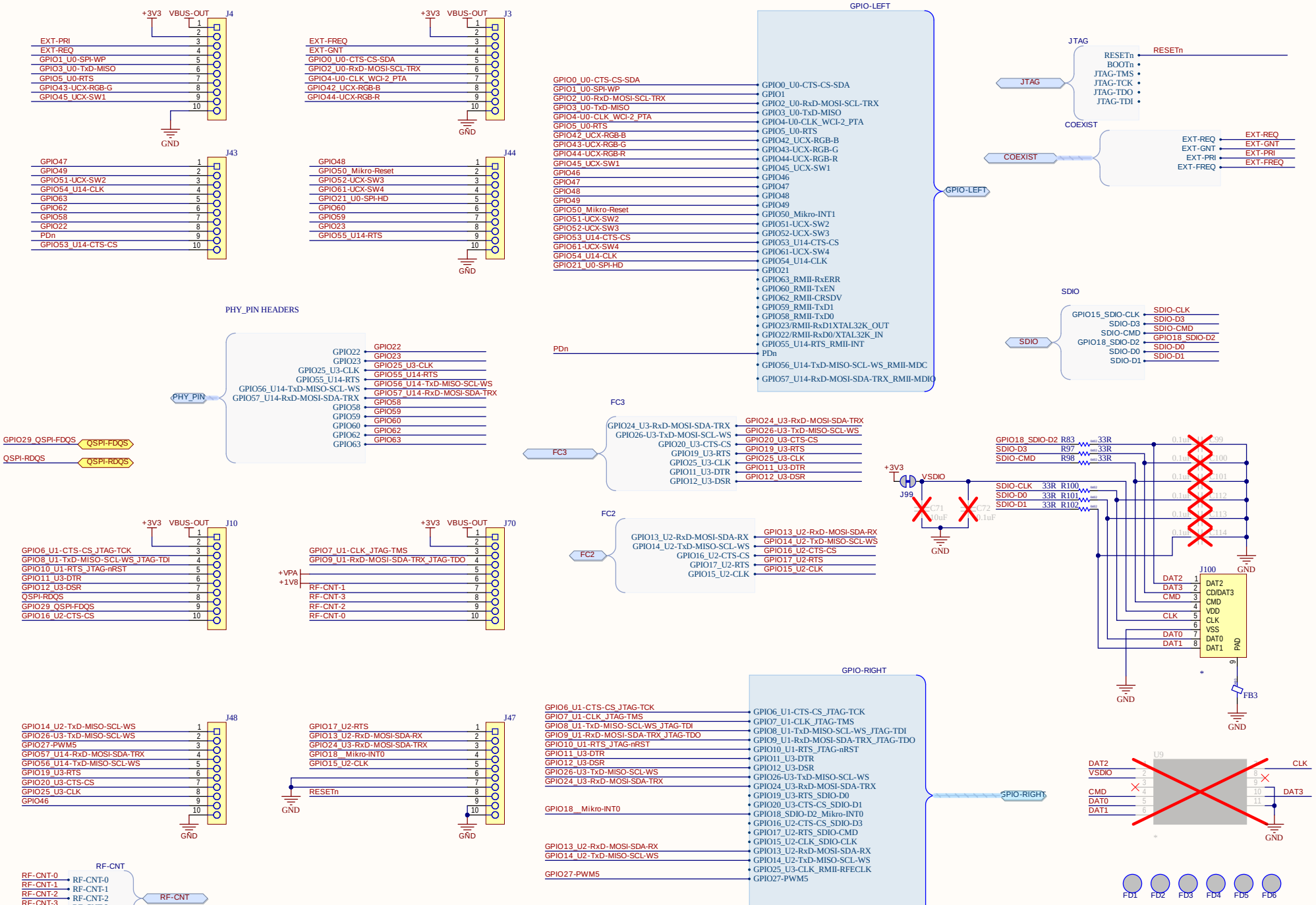

Project: EVK-IRIS-W1	PCBA:	Revision:
Part Num: EVK-IRIS-W106	EVK-IRIS-W1-PIN-HEADERS_SDIO-HEADER.SchDoc	Page: 13 / 14
Sch Num:	Release Date:	

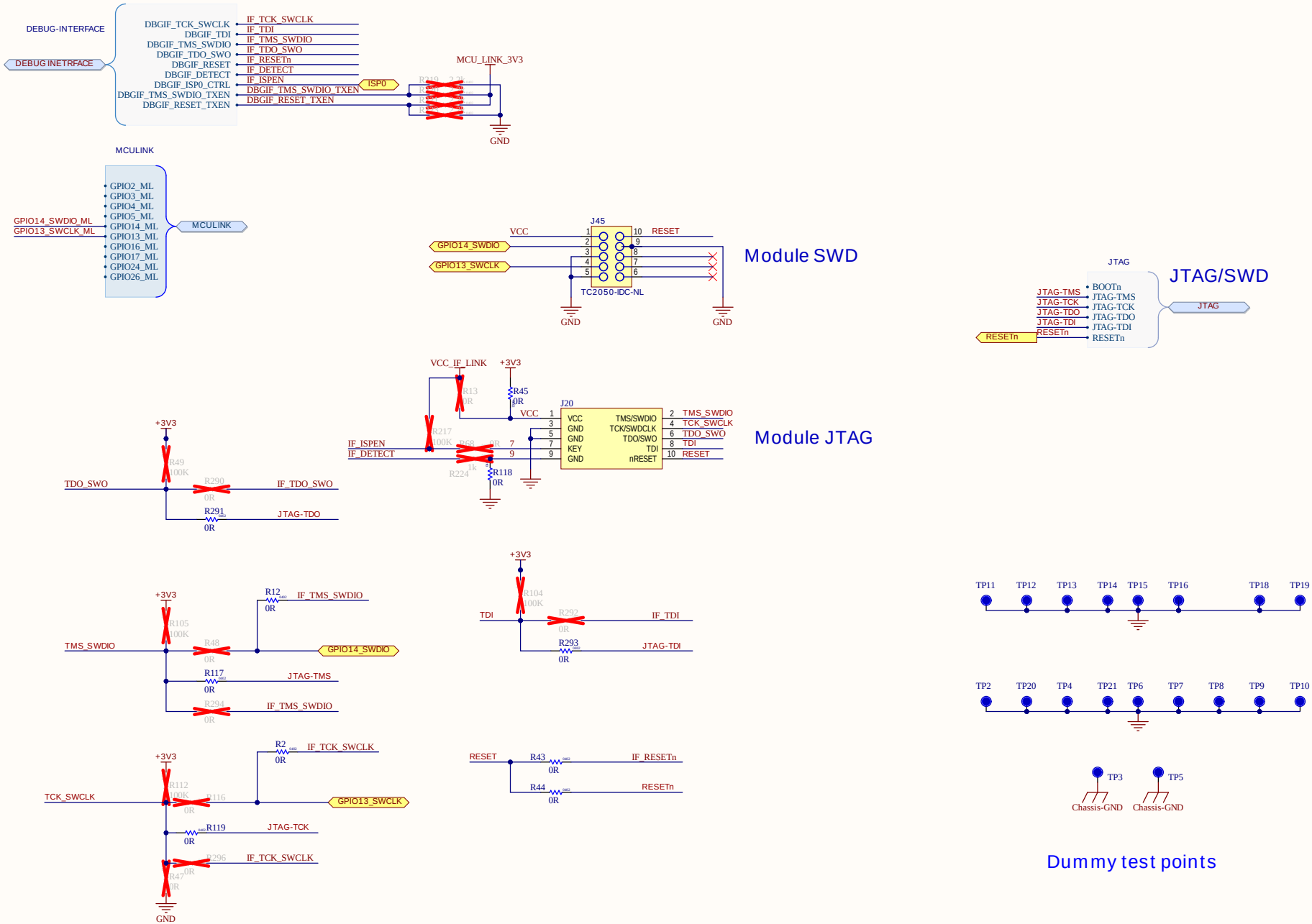

Project: EVK-IRIS-W1	PCBA:	Revision:
Part Num: EVK-IRIS-W106	EVK-IRIS-W1-DEBUG INTERFACE.SchDoc	Page: 14 / 14
Sch Num:	Release Date:	