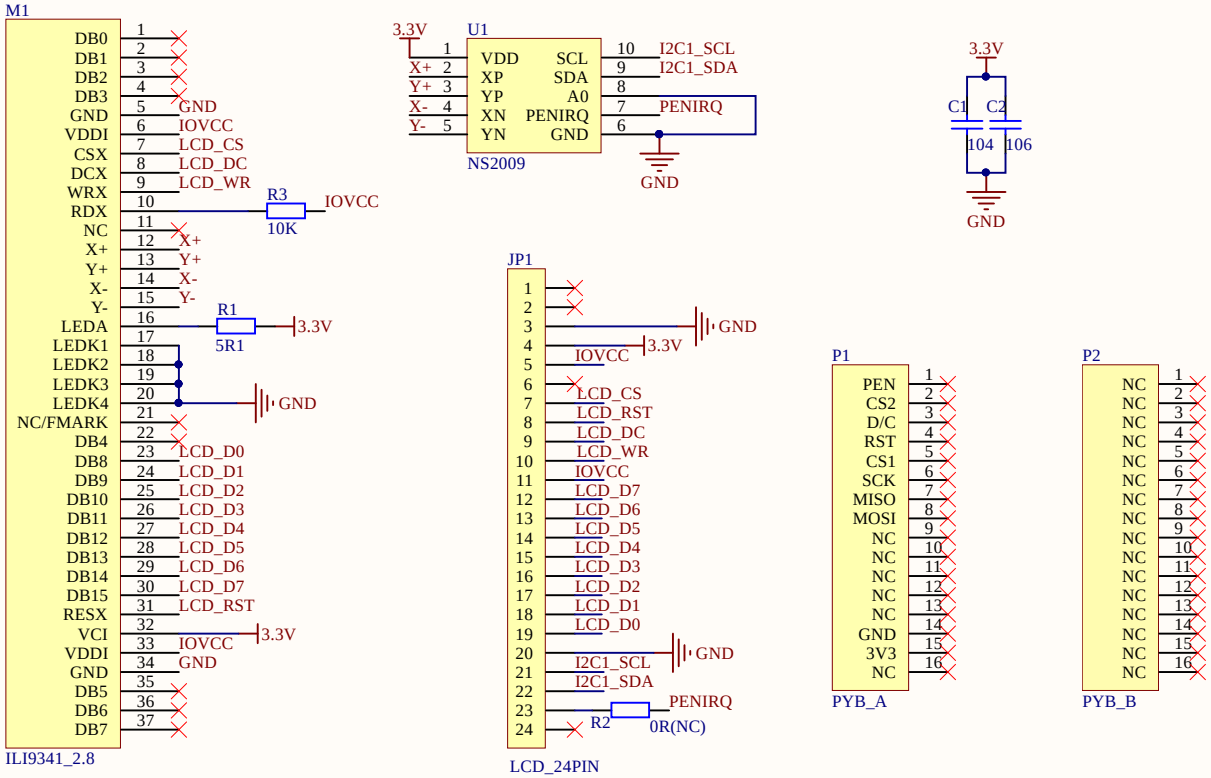

Title	2.8' TFT LCD (Resistive Touch)	
Size A4	Number www.01Studio.org	Revision v1.0
Date: 2021-02-05	Sheet of	
File: D:\微云同步\..\01Studio_2.8TFT.SchDoc	Drawn By:	

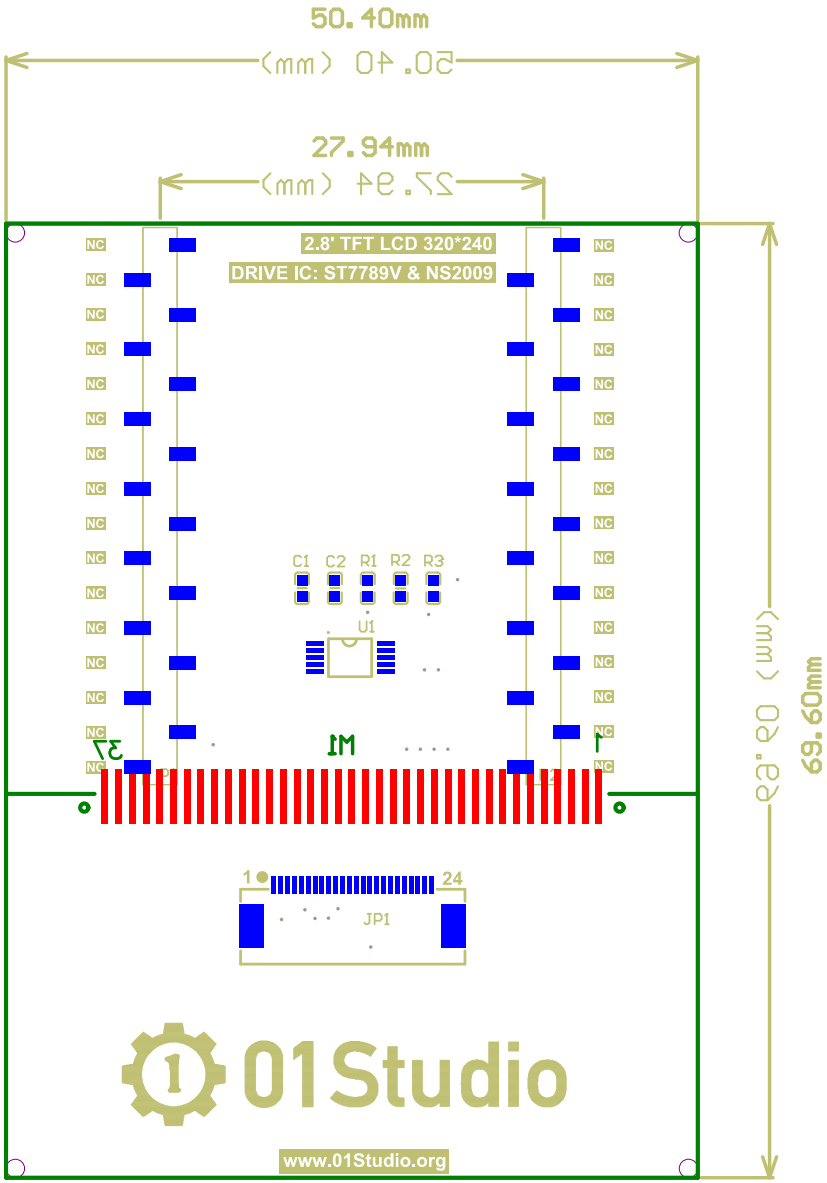
50.40mm
27.94mm
2.8' TFT LCD 320*240
DRIVE IC: ST7789V & NS2009
NC
C1 C2 R1 R2 R3
U1
M1
37
1
JP1
1
24
69.60mm
01Studio
www.01Studio.org