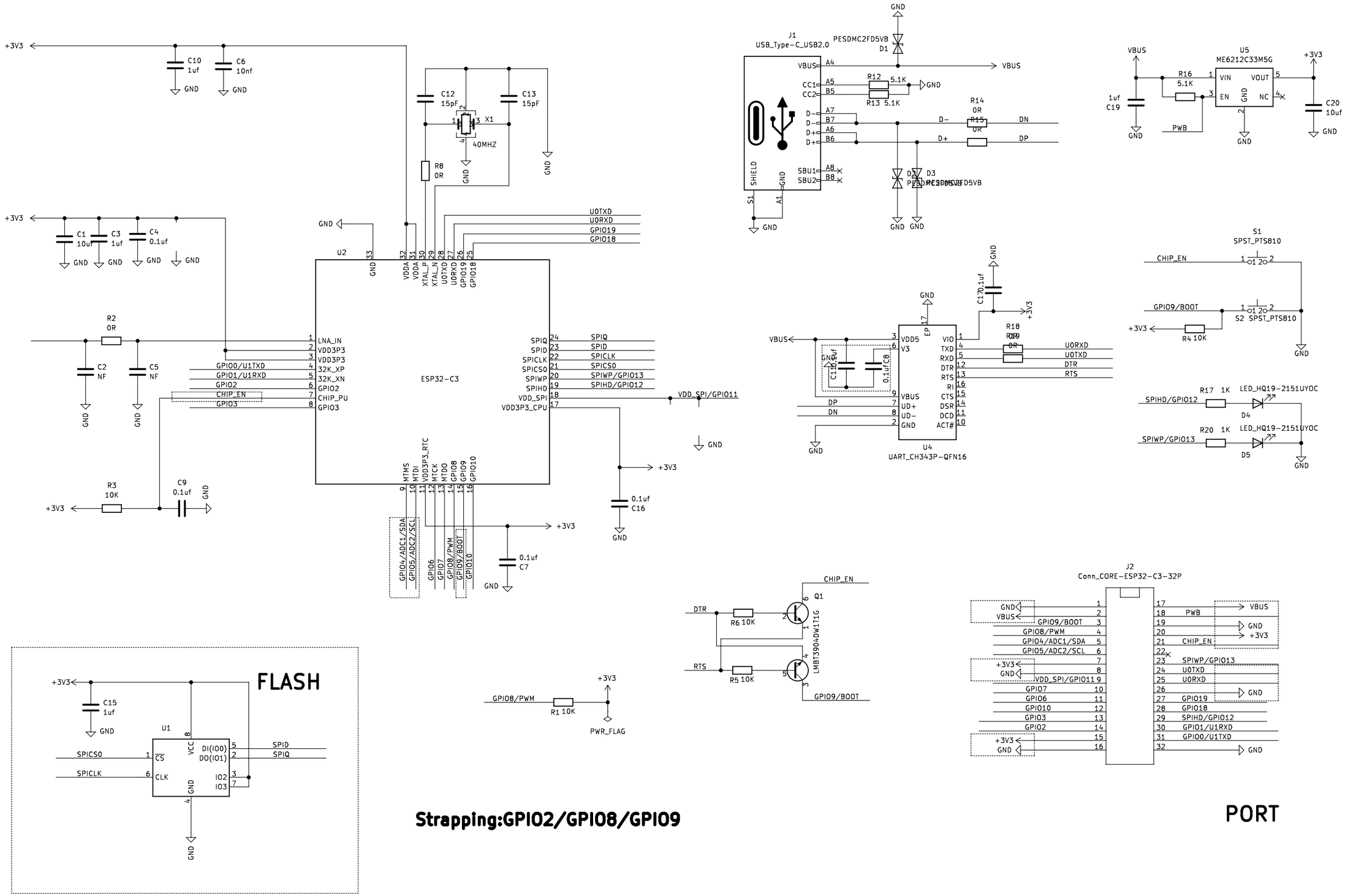
ESP32-C3
U2
J1
USB_Type-C_USB2.0
PESDMC2FD5VB
U5
ME6212C33M5G
U4
UART_CH343P-QFN16
S1
SPST_PTS810
S2 SPST_PTS810
J2
Conn_CORE-ESP32-C3-32P
Q1
LMBT3904DW1T1G
LED_HQ19-2151UYOC
PWR_FLAG
FLASH
U1
Strapping:GPIO2/GPIO8/GPIO9
PORT