Partial SPI dedicated for thermocouple amplifiers. MAX6678/MAX31855

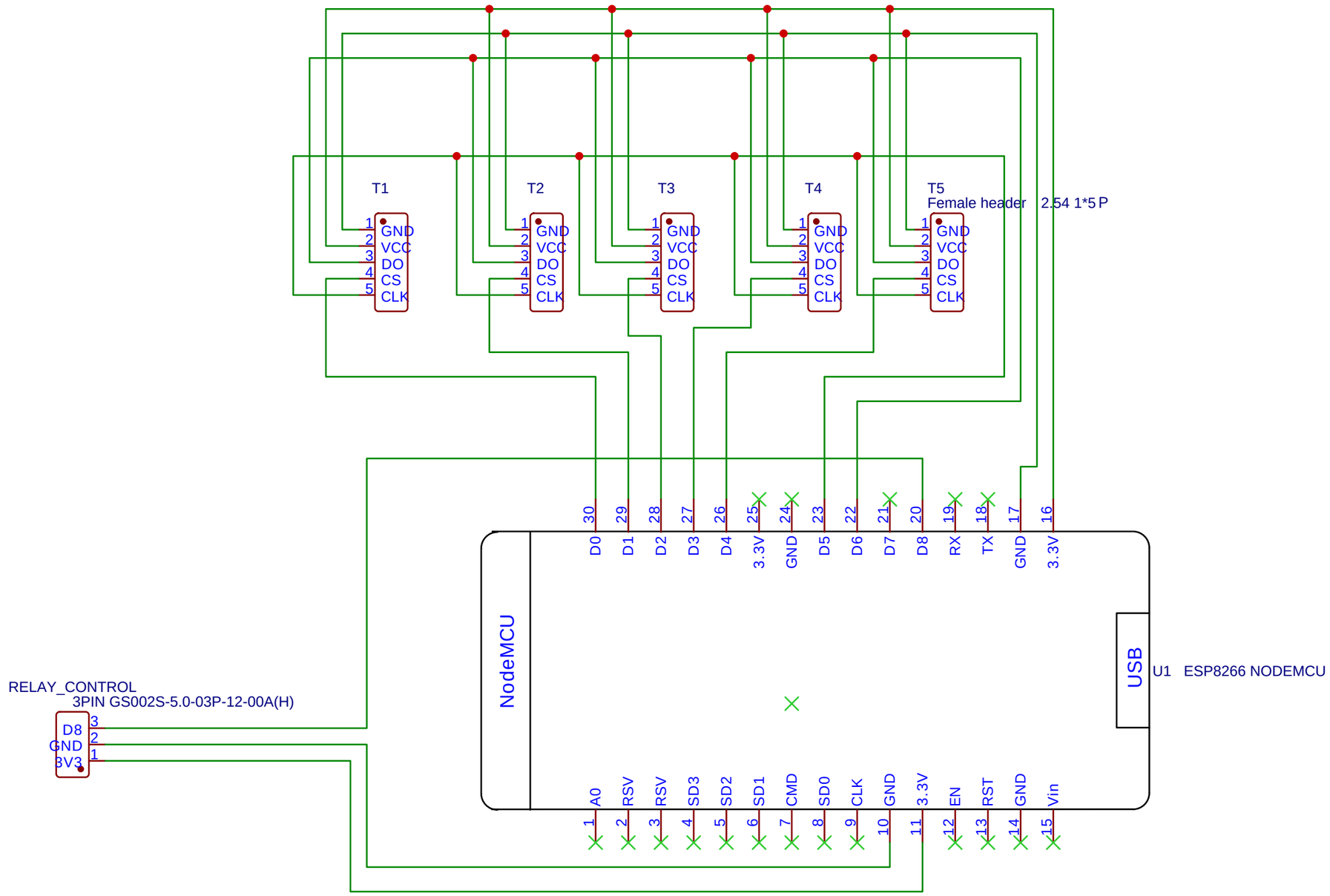


| | | |
|---|---|---|
| TITLE: Temperature Sensor and Relay Control ESP8266 | | REV: 3.5 |
| THE UNIVERSITY OF ARIZONA COLLEGE OF AGRICULTURE & LIFE SCIENCES COLLEGE OF ENGINEERING Biosystems Engineering | Company: University of Arizona | Sheet: 1/1 |
| | Date: 2023-07-05 Drawn By: Bryan P Blue | |