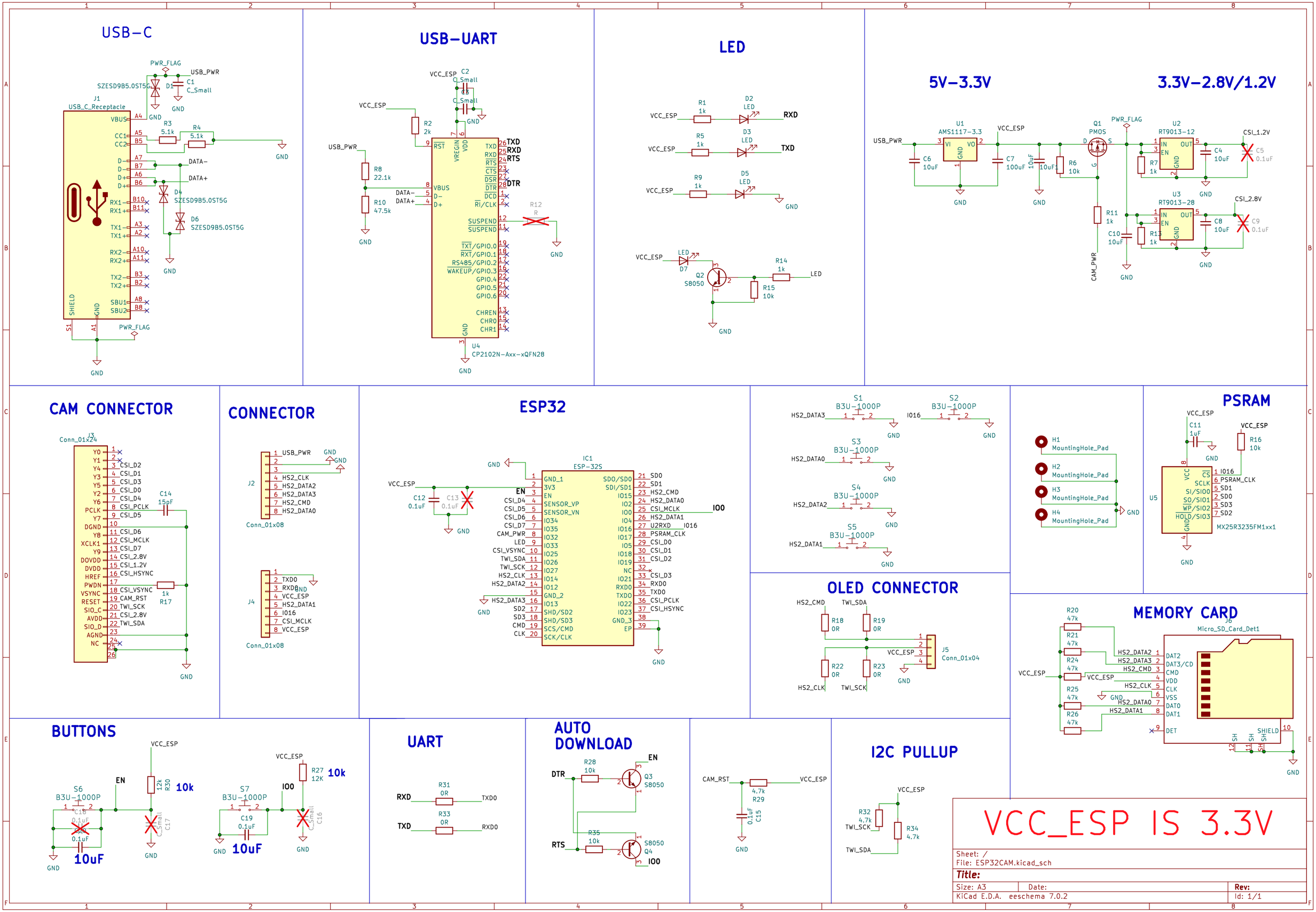
USB-C
J1
USB_C_Receptacle
PWR_FLAG
USB_PWR
SZESD9B5.0ST5G
D1
C1
C_Small
GND
VBUS
CC1
CC2
R3
5.1k
R4
5.1k
DATA-
DATA+
D4
SZESD9B5.0ST5G
D6
SZESD9B5.0ST5G
RX1-
RX1+
TX1-
TX1+
RX2-
RX2+
TX2-
TX2+
SBU1
SBU2
SHIELD
S1
A1
USB-UART
VCC_ESP
C2
C_Small
C3
C_Small
R2
2k
USB_PWR
R8
22.1k
R10
47.5k
DATA-
DATA+
RST
VREGIN
VDD
VBUS
D-
D+
TXD
RXD
RTS
CTS
DSR
DTR
DCD
RI/CLK
SUSPEND
SUSPEND
TXT/GPIO.0
RXT/GPIO.1
RS485/GPIO.2
WAKEUP/GPIO.3
GPIO.4
GPIO.5
GPIO.6
CHREN
CHR0
CHR1
R12
R
U4
CP2102N-Axx-xQFN28
LED
R1
1k
D2
LED
RXD
R5
1k
D3
LED
TXD
R9
1k
D5
LED
D7
LED
Q2
S8050
R14
1k
R15
10k
5V-3.3V
3.3V-2.8V/1.2V
U1
AMS1117-3.3
VI
VO
GND
C6
10uF
C7
100uF
10uF
10uF
R6
10k
Q1
PMOS
D
S
G
R7
1k
U2
RT9013-12
IN
OUT
EN
C4
10uF
CSI_1.2V
C5
0.1uF
R11
1k
C10
10uF
R13
1k
U3
RT9013-28
C8
10uF
CSI_2.8V
C9
0.1uF
CAM_PWR
CAM CONNECTOR
J3
Conn_01x24
Y0
Y1
Y4
Y3
Y5
Y2
Y6
PCLK
Y7
DGND
Y8
XCLK1
Y9
DOVDD
DVDD
HREF
PWDN
VSYNC
RESET
SIO_C
AVDD
SIO_D
AGND
NC
CSI_D2
CSI_D1
CSI_D3
CSI_D0
CSI_D4
CSI_PCLK
CSI_D5
CSI_D6
CSI_MCLK
CSI_D7
CSI_2.8V
CSI_1.2V
CSI_HSYNC
CSI_VSYNC
CAM_RST
TWI_SCK
CSI_2.8V
TWI_SDA
C14
15pF
R17
1k
CONNECTOR
J2
Conn_01x08
USB_PWR
HS2_CLK
HS2_DATA2
HS2_DATA3
HS2_CMD
HS2_DATA0
J4
Conn_01x08
TXD0
RXD0
VCC_ESP
HS2_DATA1
I016
CSI_MCLK
VCC_ESP
ESP32
IC1
ESP-32S
GND_1
3V3
EN
SENSOR_VP
SENSOR_VN
IO34
IO35
IO32
IO33
IO25
IO26
IO27
IO14
IO12
GND_2
IO13
SHD/SD2
SHD/SD3
SCS/CMD
SCK/CLK
SD0/SD0
SD1/SD1
IO15
IO2
IO0
IO4
IO16
IO17
IO5
IO18
IO19
NC
IO21
RXD0
TXD0
IO22
IO23
GND_3
EP
SD0
SD1
HS2_CMD
HS2_DATA0
CSI_MCLK
HS2_DATA1
U2RXD
PSRAM_CLK
CSI_D0
CSI_D1
CSI_D2
CSI_D3
RXD0
TXD0
CSI_PCLK
CSI_HSYNC
C12
0.1uF
C13
0.1uF
CSI_D4
CSI_D5
CSI_D6
CSI_D7
CAM_PWR
LED
CSI_VSYNC
TWI_SDA
TWI_SCK
HS2_CLK
HS2_DATA2
HS2_DATA3
SD2
SD3
CMD
CLK
S1
B3U-1000P
HS2_DATA3
S2
B3U-1000P
I016
S3
B3U-1000P
HS2_DATA0
S4
B3U-1000P
HS2_DATA2
S5
B3U-1000P
HS2_DATA1
H1
MountingHole_Pad
H2
MountingHole_Pad
H3
MountingHole_Pad
H4
MountingHole_Pad
PSRAM
C11
1uF
R16
10k
U5
VCC
CS
SCLK
SI/SIO0
SO/SIO1
WP/SIO2
HOLD/SIO3
I016
PSRAM_CLK
SD1
SD0
SD3
SD2
MX25R3235FM1xx1
OLED CONNECTOR
HS2_CMD
TWI_SDA
R18
0R
R19
0R
R22
0R
R23
0R
HS2_CLK
TWI_SCK
J5
Conn_01x04
MEMORY CARD
J6
Micro_SD_Card_Det1
R20
47k
R21
47k
R24
47k
R25
47k
R26
47k
HS2_DATA2
HS2_DATA3
HS2_CMD
VCC_ESP
HS2_CLK
HS2_DATA0
HS2_DATA1
DAT2
DAT3/CD
CMD
VDD
CLK
VSS
DAT0
DAT1
DET
SHIELD
BUTTONS
S6
B3U-1000P
EN
R30
12k
10k
C18
0.1uF
C20
0.1uF
10uF
C17
C_Small
S7
B3U-1000P
IO0
R27
12K
10k
C19
0.1uF
10uF
C16
C_Small
UART
RXD
R31
0R
TXD0
TXD
R33
0R
RXD0
AUTO DOWNLOAD
DTR
R28
10k
Q3
S8050
EN
RTS
R35
10k
S8050
Q4
IO0
CAM_RST
4.7k
R29
0.1uF
C15
I2C PULLUP
R32
4.7k
TWI_SCK
R34
4.7k
TWI_SDA
VCC_ESP IS 3.3V
Sheet: /
File: ESP32CAM.kicad_sch
Title:
Size: A3
Date:
Rev:
KiCad E.D.A. eeschema 7.0.2
Id: 1/1