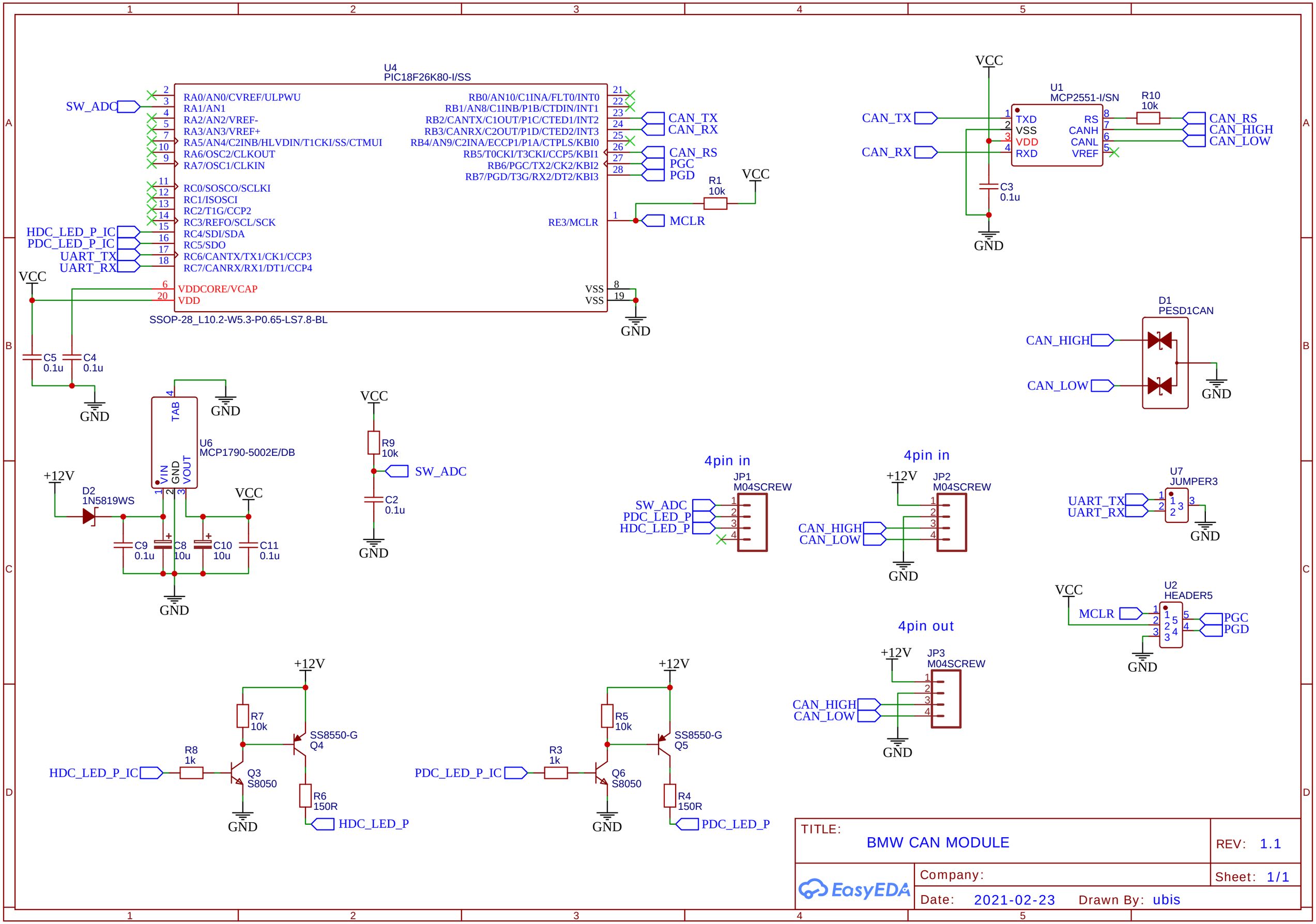

TITLE: BMW CAN MODULE	REV: 1.1
Company:	Sheet: 1/1
Date: 2021-02-23 Drawn By: ubis	

EasyEDA