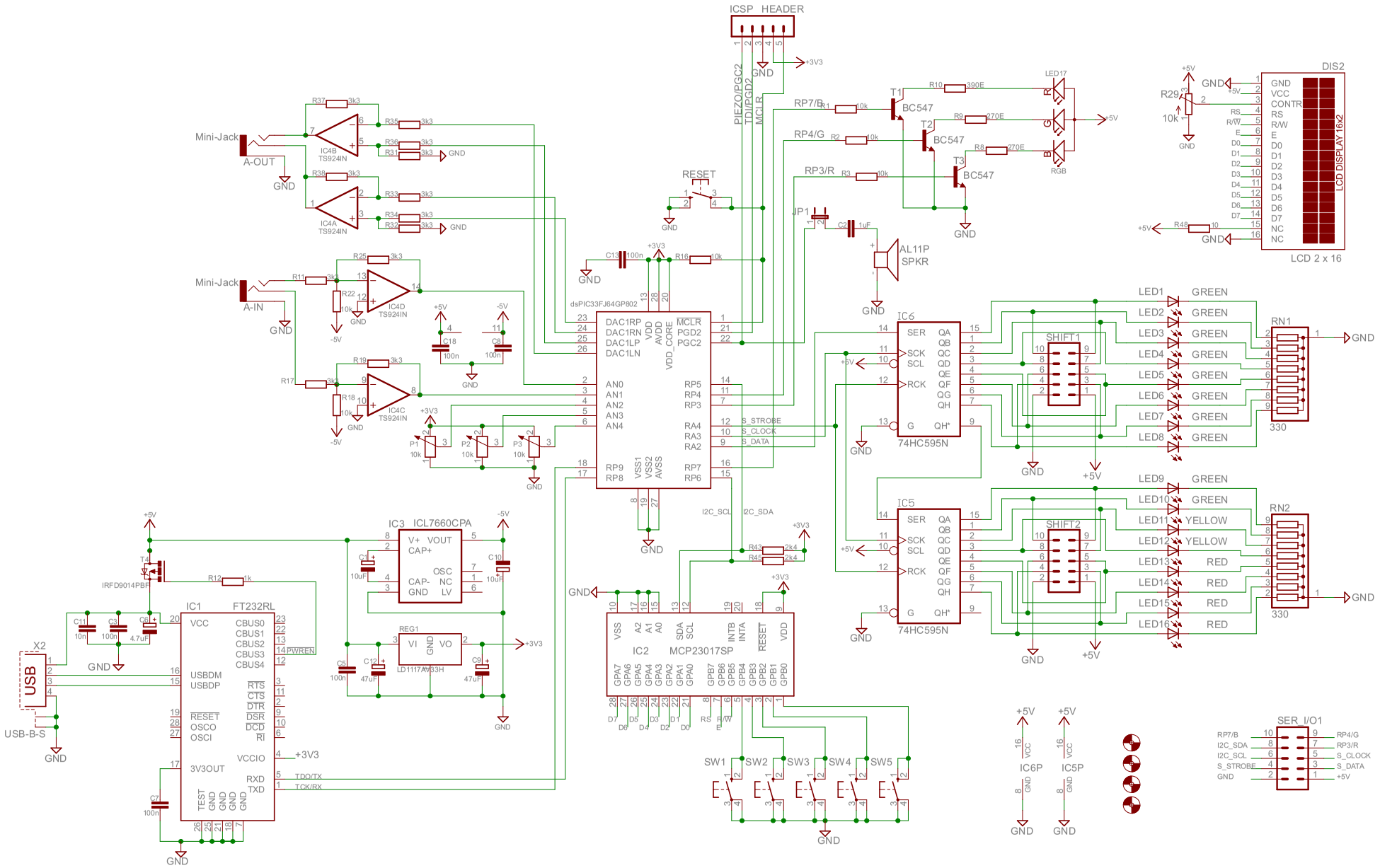

uboard revision C

(c) staronic 2011

Sheet: 1 1/1