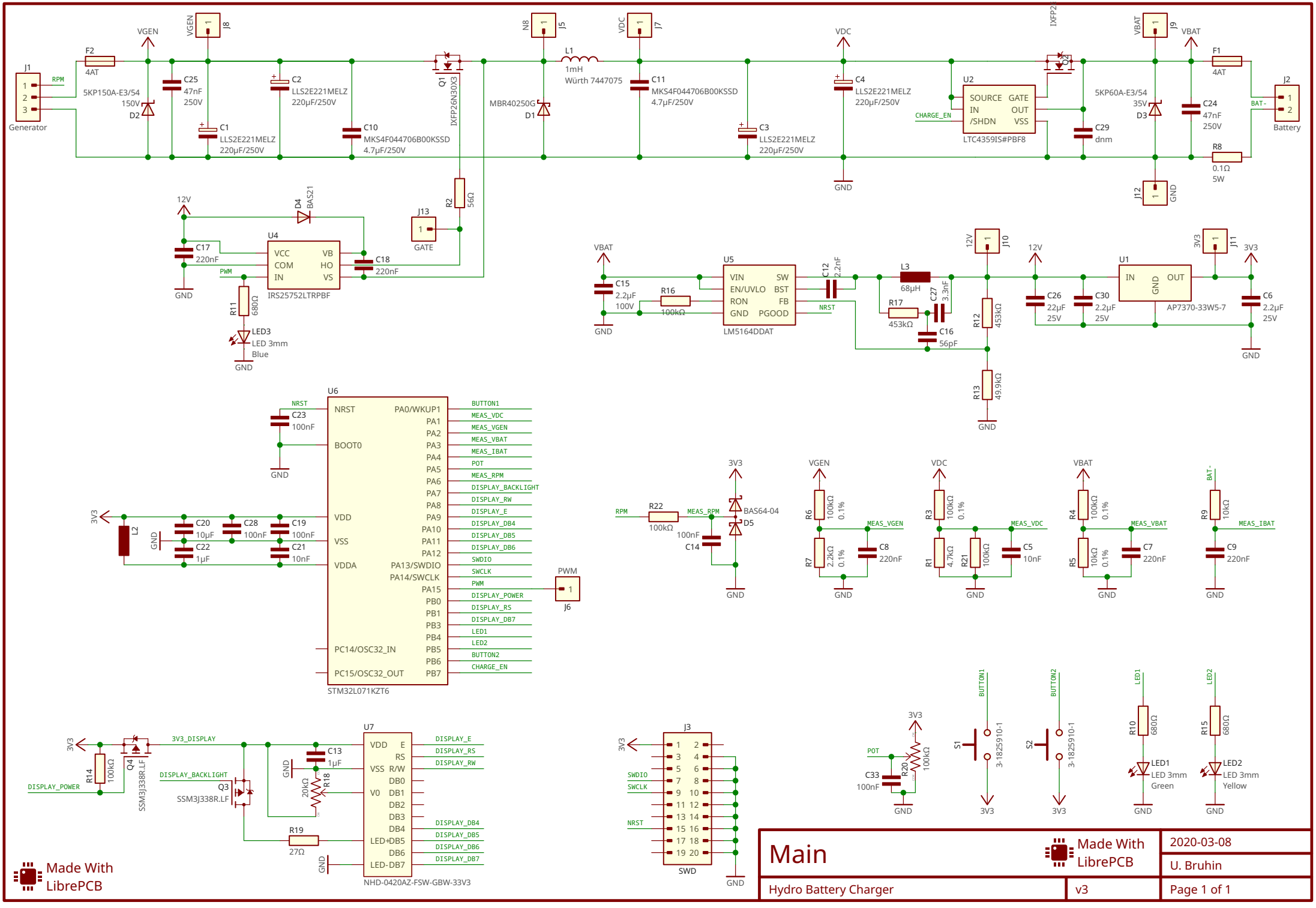
J1
Generator
RPM
F2
4AT
VGEN
J8
C25
47nF
250V
5KP150A-E3/54
150V
D2
C1
LLS2E221MELZ
220µF/250V
C2
LLS2E221MELZ
220µF/250V
C10
MKS4F044706B00KSSD
4.7µF/250V
Q1
IXFP26N30X3
N8
J5
MBR40250G
D1
L1
1mH
Würth 7447075
VDC
J7
C11
MKS4F044706B00KSSD
4.7µF/250V
C3
LLS2E221MELZ
220µF/250V
C4
LLS2E221MELZ
220µF/250V
GND
U2
SOURCE
GATE
IN
OUT
/SHDN
VSS
LTC4359IS#PBF8
CHARGE_EN
IXFP21
C29
dnm
VBAT
J9
5KP60A-E3/54
35V
D3
C24
47nF
250V
J12
F1
4AT
R8
0.1Ω
5W
J2
BAT-
Battery
12V
D4
BAS21
C17
220nF
U4
VCC
COM
IN
VB
HO
VS
IRS25752LTRPBF
C18
220nF
PWM
R11
680Ω
LED3
LED 3mm
Blue
J13
GATE
R2
56Ω
VBAT
C15
2.2µF
100V
R16
100kΩ
U5
VIN
EN/UVLO
RON
GND
SW
BST
FB
PGOOD
LM5164DDAT
C12
2.2nF
NRST
L3
68µH
R17
453kΩ
C27
3.3nF
C16
56pF
J10
R12
453kΩ
R13
49.9kΩ
C26
22µF
25V
C30
2.2µF
25V
U1
IN
GND
OUT
AP7370-33W5-7
J11
3V3
C6
2.2µF
25V
U6
NRST
C23
100nF
BOOT0
VDD
VSS
VDDA
PA0/WKUP1
PA1
PA2
PA3
PA4
PA5
PA6
PA7
PA8
PA9
PA10
PA11
PA12
PA13/SWDIO
PA14/SWCLK
PA15
PB0
PB1
PB3
PB4
PB5
PB6
PB7
PC14/OSC32_IN
PC15/OSC32_OUT
STM32L071KZT6
BUTTON1
MEAS_VDC
MEAS_VGEN
MEAS_VBAT
MEAS_IBAT
POT
MEAS_RPM
DISPLAY_BACKLIGHT
DISPLAY_RW
DISPLAY_E
DISPLAY_DB4
DISPLAY_DB5
DISPLAY_DB6
SWDIO
SWCLK
PWM
DISPLAY_POWER
DISPLAY_RS
DISPLAY_DB7
LED1
LED2
BUTTON2
CHARGE_EN
J6
C20
10µF
C28
100nF
C19
100nF
C22
1µF
C21
10nF
L2
R22
100kΩ
100nF
C14
BAS64-04
D5
R6
100kΩ
0.1%
R7
2.2kΩ
0.1%
C8
220nF
R3
100kΩ
0.1%
R1
4.7kΩ
R21
100kΩ
C5
10nF
R4
100kΩ
0.1%
R5
10kΩ
0.1%
C7
220nF
R9
10kΩ
C9
220nF
3V3_DISPLAY
R14
100kΩ
Q4
SSM3J338R.LF
DISPLAY_POWER
DISPLAY_BACKLIGHT
Q3
SSM3J338R.LF
C13
1µF
20kΩ
R18
R19
27Ω
U7
VDD
VSS
V0
E
RS
R/W
DB0
DB1
DB2
DB3
DB4
LED+
DB5
DB6
LED-
DB7
NHD-0420AZ-FSW-GBW-33V3
J3
SWDIO
SWCLK
NRST
SWD
POT
R20
100kΩ
C33
100nF
S1
3-1825910-1
S2
3-1825910-1
R10
680Ω
LED1
LED 3mm
Green
R15
680Ω
LED2
LED 3mm
Yellow
Made With
LibrePCB
Main
Made With
LibrePCB
2020-03-08
U. Bruhin
Hydro Battery Charger
v3
Page 1 of 1