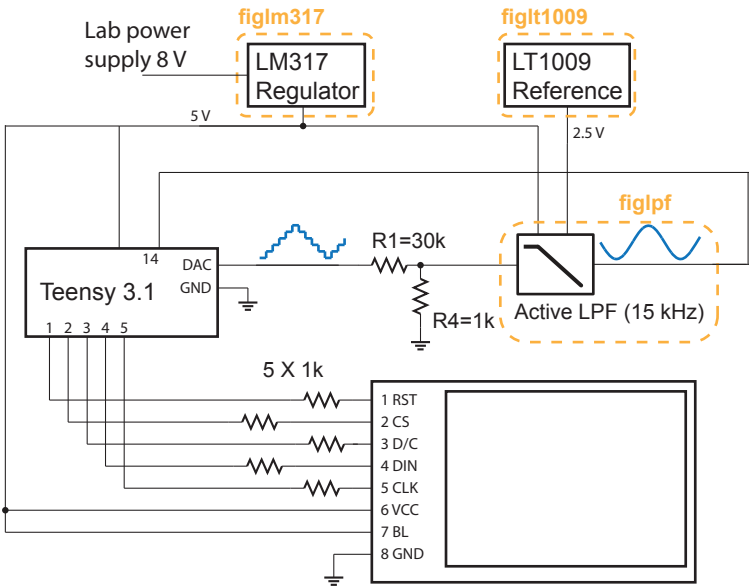
figlm317
figlt1009
Lab power supply 8 V
LM317 Regulator
LT1009 Reference
5 V
2.5 V
figlpf
R1=30k
14
DAC
GND
Teensy 3.1
1 2 3 4 5
R4=1k
Active LPF (15 kHz)
5 X 1k
1 RST
2 CS
3 D/C
4 DIN
5 CLK
6 VCC
7 BL
8 GND

(a)

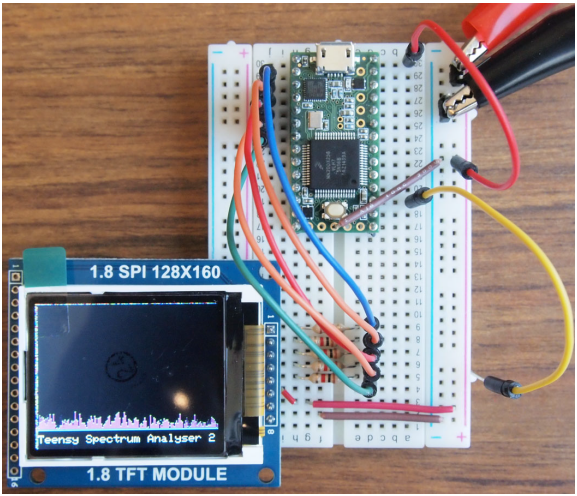
1.8 SPI 128X160
Teensy Spectrum Analyser 2
1.8 TFT MODULE

(b)