HTML ABSTRACT + LINKS

Spread spectrum communication system with chaotic frequency modulation

A. R. Volkovskii,[a] L. Sh. Tsimring, N. F. Rulkov, and I. Langmore
Institute for Nonlinear Science, University of California, San Diego, California 92093

(Received 30 March 2005; accepted 6 May 2005; published online 5 July 2005)

A new spread spectrum communication system utilizing chaotic frequency modulation of sinusoidal signals is discussed. A single phase lock loop (PLL) system in the receiver is used both to synchronize the local chaotic oscillator and to recover the information signal. We study the dynamics of the synchronization process, stability of the PLL system, and evaluate the bit-error-rate performance of this chaos-based communication system. © *2005 American Institute of Physics*.
[DOI: 10.1063/1.1942327]

The ability of chaotic oscillators to synchronize demonstrated theoretically and experimentally about two decades ago has triggered intensive research in the application of this phenomenon for covert communication. The information signal of such systems is hidden in the broadband continuous spectrum of chaotic carrier signal. Synchronization of chaos in the receiver oscillators is used to recover the information signal out of the chaotic mixture. The studies have shown that the main challenge in the development of such type of communication system is to achieve robust synchronization of chaos that can tolerate noise and other distortions occurring in the communication channel. In this paper we consider a new method that significantly improves noise characteristics of the synchronization and makes the chaos communication robust enough to work with realistic channels. The method uses a wide-band chaotic frequency modulation of the carrier signal and a phase-lock loop system as the synchronization means. We present the results of theoretical studies of nonlinear dynamics of phase-lock loop systems involved in the synchronization of chaotic oscillators and recovery of information signals. We also evaluate the bit-error-rate performance of this communication method using numerical simulations.

I. INTRODUCTION

In conventional spread spectrum communication systems pseudorandom signals are used for broadening the spectrum by modulating the phase (in direct-sequence), or the frequency [in frequency hopping (FH)] of the carrier signal, which provides a better antijam performance, low power spectral density, and implies the reduction of multipath effects. At the receiver a corresponding despreading technique is used to reconstruct the baseband signal. The efficiency of this process is characterized by the processing gain of the system.[1] Despreading algorithms usually require synchronization between the transmitter and the receiver. Since the synchronization of chaotic oscillators has been demonstrated,[2] the idea of using chaos to improve characteristics of communication systems have been drawing strong attention. Many of the proposed chaos-based communication schemes can be found in Refs. 3–5. Although the early chaotic communication schemes have performance characteristics much worse when compared to the traditional binary phase shift keying (BPSK) and binary frequency shift keying (BFSK) modulations,[6] the bit-error-rate (BER) characteristics of many recently suggested schemes are very close to the ideal ones.[7–9] The BER analysis of different chaos-based modulation schemes with additive channel noise can be found in Refs. 3, 10, and 11. Usually chaos synchronization is very susceptible to channel noise, distortions, and interference. To minimize the degradation of performance associated with these factors, communication systems based on chaotic pulse position modulation and chaotic frequency modulation (CFM) have recently attracted much interest.[7,12–16] In the chaotic pulse position modulation system the transmitted signal is a sequence of pulses with chaotic time intervals between them. The information signal modulates the pulse position within a certain window. The CFM communication scheme is a modification of the frequency hopping scheme, where a chaotic signal is used for spreading the spectrum instead of pseudonoise sequences.

In this paper we propose a communication system which uses the CFM for spreading the spectrum and BFSK modulation for the information signal. We analyze the stability of the synchronization scheme and calculate the BER curves. As a radio front-end we propose a superheterodyne receiver with two frequency converters and study its stability.

II. CFM SYNCHRONIZATION SCHEME

The block-diagram of the proposed CFM communication scheme is shown in Fig. 1. The transmitter includes the voltage controlled oscillator (VCO) and the chaotic oscillator (CHO). One of the CHO's state variables $x_t(t)$ is used for chaotic frequency modulation of the VCO. The analog or binary data signal modulates the VCO's frequency in addition to $x_t(t)$. At the same time the information signal is applied to the CHO as an external driving. The VCO generates a CFM signal with the frequency:

[a]Electronic mail: avolkovskii@ucsd.edu

 © 2005 American Institute of Physics

Downloaded 05 Jul 2005 to 132.239.86.32. Redistribution subject to AIP license or copyright, see http://chaos.aip.org/chaos/copyright.jsp

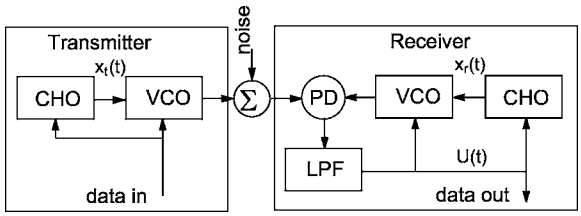

FIG. 1. Block diagram of CFM communication scheme.

$$\omega_t \equiv \dot{\varphi}_t = \omega_0(1 + m_1 x_t(t) + m_2 b_i), \tag{1}$$

where ω_0 is the VCO's free running frequency, m_1 and m_2 are the modulation parameters, and b_i is the information signal. The information is encoded as a frequency deviation from the CFM signal. To ensure the regime of identical synchronization between the transmitter and the receiver, the information signal b_i should be applied to the transmitter CHO in the same way as the detected signal $u(t)$ is applied to the receiver CHO. In this case, despite the changes in the CHO's dynamics caused by b_i and $u(t)$, both CHOs can oscillate synchronously. We assume that the amplitude of the information signal is small enough to keep the CHOs in the chaotic regime. In the receiver the phase discriminator (PD) generates a signal which is a function of the phase difference between the received and local CFM signals. The local CFM signal frequency is

$$\omega_r \equiv \dot{\varphi}_r = \omega_0(1 + m_1 x_r(t) + m_2 u). \tag{2}$$

The local VCO, PD, and the low pass filter (LPF) form a phase locked loop (PLL), which tends to synchronize the local VCO to the one in the transmitter. Assuming that the PD is a multiplier and the VCOs generate sinusoidal wave forms, the PD output is $A\sin(\varphi)$, where φ is the phase difference between the PD input signals $\varphi = \varphi_t - \varphi_r$. We consider a LPF with the transfer function of the form $K(s) = 1/(1 + T_f s)$. In this case the joint dynamics of the transmitter and the receiver can be described by

$$\dot{\mathbf{X}}_\mathbf{t} = \mu \mathbf{F}(x_t + \epsilon b_i; \mathbf{x}_\mathbf{t}), \tag{3}$$

$$\begin{aligned} \dot{\mathbf{X}}_\mathbf{r} &= \mu \mathbf{F}(x_r + \epsilon u; \mathbf{x}_\mathbf{r}), \\ \dot{\varphi} &= [\beta(x_t - x_r) + b_i - u]/\lambda, \\ \dot{u} &= \lambda(\sin(\varphi) - u), \end{aligned} \tag{4}$$

where $\mathbf{F}$ is the vector function of the state variables $\mathbf{X}_{\mathbf{r},\mathbf{t}} \equiv \{x_{r,t}; \mathbf{x}_{\mathbf{r},\mathbf{t}}\} \in \mathbb{R}^d$ (d is the dimension of CHOs) that represents the CHO dynamics in the receiver and the transmitter; $x_{r,t}$ are scalar variables used for the CHOs coupling; $\mathbf{x}_{\mathbf{r},\mathbf{t}} \in \mathbb{R}^{d-1}$ represent remaining $d-1$ components of the state vectors; ϵ is a coupling parameter; u is the LPF output voltage; μ controls the characteristic time scale of the CHOs; $\beta = m_1/m_2$ is the relative modulation depth; $\lambda = 1/\sqrt{A m_2 \omega_0 T_f}$ is the PLL damping parameter. The time in Eqs. (3) and (4) is normalized by $\sqrt{T_f/A m_2 \omega_0}$. The phase variables $\{x_{t,r}, \mathbf{x}_{\mathbf{t},\mathbf{r}}, u\}$ and b_i are normalized by A.

As a model of communication channel we used a channel with additive white Gaussian noise. Although it does not take into account many factors, such as interuser interference, multipath propagation, etc., the BER performance in this channel is one of the key characteristics of a communication system, because it benchmarks the susceptibility of a system to internal and external correlated (narrowband) and noncorrelated (wideband) interference signals.

The set of equations (3) and (4) has a synchronous solution:

$$\mathbf{X}_\mathbf{r}(t) \equiv \mathbf{X}_\mathbf{t}(t), \quad u = b_i, \quad \varphi = \arcsin(u), \tag{5}$$

which corresponds to the regime of identical synchronization between the CHOs and constant phase shift between the VCOs. In this regime the information signal b_i can be decoded by measuring the PLL output voltage u. In order to demonstrate that the synchronous regime is stable we assume that $\mu \ll 1$. In this case Eqs. (3) and (4) can be split into fast (the PLL, described by φ and u) and slow (the CHOs, described by $\mathbf{X}_\mathbf{t}$ and $\mathbf{X}_\mathbf{r}$) subsystems. The fast subsystem for which $\mathbf{X}_\mathbf{t}, \mathbf{X}_\mathbf{r}, b_i$ can be assumed constant has the steady state solution:

$$u = u_s = \beta(x_t - x_r) + b_i, \quad \varphi = \varphi_s = \arcsin(u_s), \tag{6}$$

This solution exists and is stable if

$$|\beta(x_t - x_r) + b_i| < 1. \tag{7}$$

After a trajectory has converged to the steady state of fast subsystem (u_s, φ_s), the CHOs become dissipatively coupled through the term $\beta(x_t - x_r)$ in the PLL output signal $u = u_s$. It has been shown in many examples that such dissipative coupling can provide stable synchronization of chaotic systems, so that $|\mathbf{X}_\mathbf{t} - \mathbf{X}_\mathbf{r}| \to 0$, when $t \to \infty$ (see, for example, Ref. 17). Assuming that the conditions for the CHOs' synchronization are satisfied, we conclude that the synchronous regime in Eqs. (3) and (4) exists and is stable. Indeed, even started from different initial conditions, the trajectories of the CHOs after some transient time should occur close to each other in the phase space, where $|\mathbf{X}_\mathbf{t} - \mathbf{X}_\mathbf{r}| \ll 1$, and therefore the condition (7) is satisfied. In the case when the parameters of CHOs are not identical, synchronization errors occur, however a small parameter mismatch leads to a small synchronization error (see, for example, Ref. 18). The synchronization error leads to a deviation of the VCO frequencies, but as we demonstrated in our previous work,[12] if the PLL is able to compensate the frequency deviations and keep the VCOs synchronized, the CHOs stay synchronized "on average."

Synchronization and communication processes with additive white Gaussian noise in the channel is shown in Fig. 2. In these simulations we used the Rossler system as the chaotic oscillators. The Rossler system has a smooth attractor with a nearly uniform distribution which is important for reliable synchronization and optimal usage of the frequency bandwidth. The system can be written in the form:

Downloaded 05 Jul 2005 to 132.239.86.32. Redistribution subject to AIP license or copyright, see http://chaos.aip.org/chaos/copyright.jsp

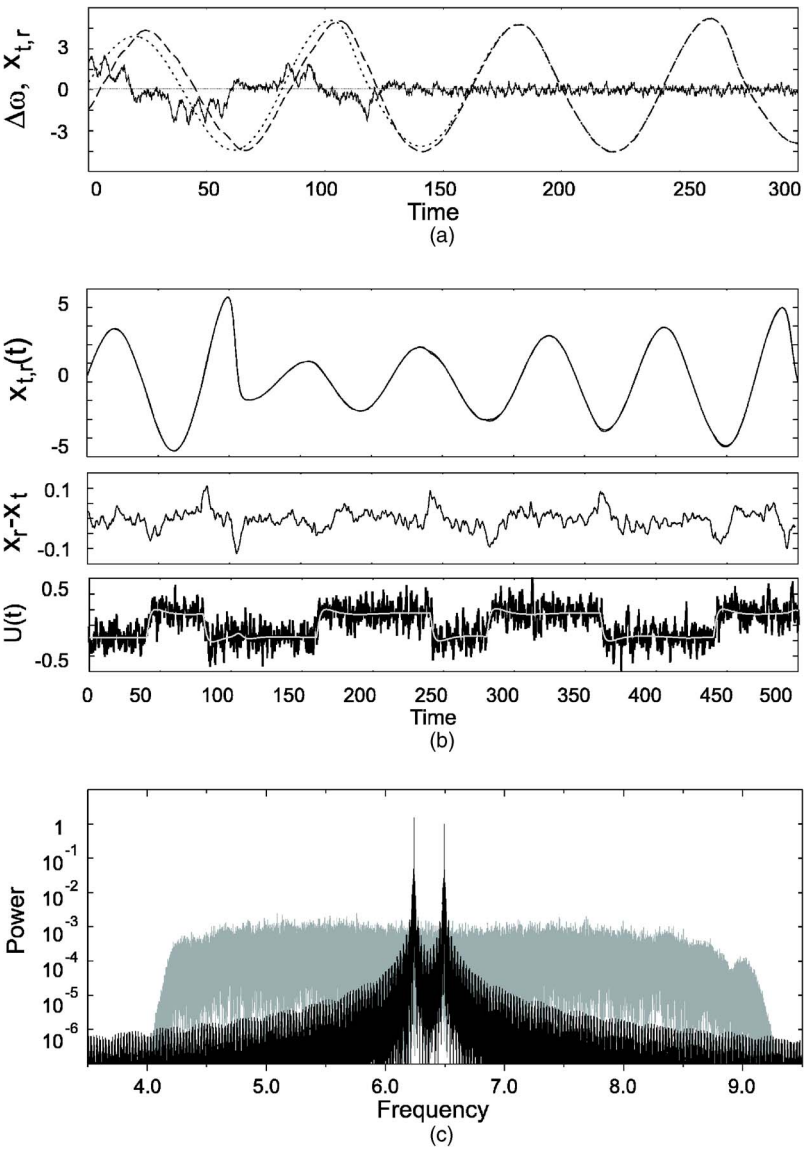

FIG. 2. Synchronization and communication with additive white Gaussian noise in the channel: (a) The chaotic variables used for CFM in the transmitter (dashed line) and in the receiver (dotted line), and the VCOs' frequency difference (solid line). (b) The wave forms for the system (3),(4) with random binary information signal b_i. The grey trace on the bottom panel shows the PLL output $u(t)$ when no noise signal were added. (c) The power spectrum of the transmitted CFM BFSK signal (grey) and BFSK signal without chaotic spreading (black). The plots were calculated with the following parameters: $\mu=0.05$, $\omega_0=40$, $\lambda=2$, $\beta=2$, $m_1=0.1$, $m_2=0.05$, $b_i=\pm 0.4$, and the bit duration $T_b=40$.

$$\dot{x}_1 = \mu(-x_2 - x_3 - d),$$

$$\dot{x}_2 = \mu(2.25x_1 + 0.15x_2), \tag{8}$$

$$\dot{x}_3 = \mu(0.04 + 5x_3(x_1 - 2))$$

with $x_{t,r}=x_1$, $d=b_i$ in the transmitter and $d=u$ in the receiver. A typical synchronization transient process is shown in Fig. 2(a). The chaotic systems were started from different initial conditions, such that the initial frequency difference between the VCOs $\Delta\omega=\omega_0 m_1(x_t(0)-x_r(0))$ was outside the PLL locking range. At $t\approx 130$ the chaotic trajectories occurred close to each other in phase space. Next, the PLL locked the VCOs, and then the CHOs gradually became synchronized. At three other times: $t\approx 20$, $t\approx 60$, and $t\approx 100$ when the PLL locked the frequencies, the CHOs were not synchronized because at these times only x_1 variables were close to each other, whereas the entire state vectors $\mathbf{X_t}$ and $\mathbf{X_r}$ were distant. In the synchronous regime (6) $u=b_i$, and therefore the transmitted information can be detected in the receiver. This communication system can transmit binary or analog information signals b_i. The communication process with BFSK modulation is shown in Fig. 2(b), where the wave forms of the CHO output $x_{t,r}(t)$, errors of chaos synchronization x_r-x_t, and the decoded binary signal given by a random sequence of bits are presented. The power spectrum of the transmitted signal $u_t(t)=\cos[\omega_0(1+m_1x_t(t)+m_2b_i)t]$ is determined by the information signal $m_2b_i(t)$ and the spreading function $m_1x_t(t)$. As in a regular BFSK signal, without the chaotic spreading ($m_1=0$) the power was concentrated near the frequencies $\omega_0\pm m_2b_i$. When the chaotic spreading was applied, the power was uniformly distributed around the central frequency ω_0.

The spreading factor in spread spectrum communication systems is determined by the bandwidths of information $\Delta f_{\inf}$ and transmitted Δf_s signals, see, for example, Ref. 19. In our example shown in Fig. 2(c) the information signal bandwidth $\Delta f_{\inf}\approx 1/T_b=0.025$. Due to the chaotic spreading the spectrum bandwidth was transformed into the $\Delta f_s\approx 5.0$. This gives the spreading factor $\Delta f_s/\Delta f_{\inf}\approx 200\gg 1$.

In the proposed system the spreading factor can be changed by varying the modulation parameter m_1 or the in-

Downloaded 05 Jul 2005 to 132.239.86.32. Redistribution subject to AIP license or copyright, see http://chaos.aip.org/chaos/copyright.jsp

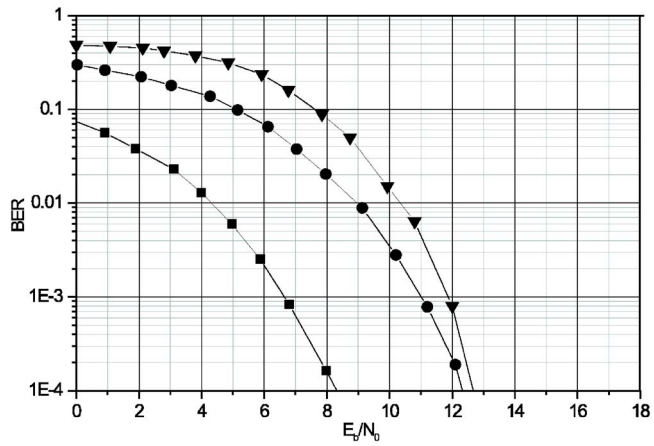

FIG. 3. The BER performance curves for BPSK (squares), optimal noncoherent BFSK (circles), and CFM BFSK (triangles).

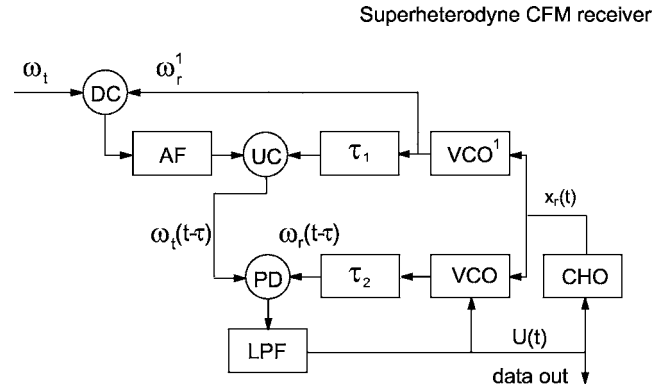

FIG. 4. The block diagram of superheterodyne receiver for CFM signals.

formation signal bandwidth Δf_{inf}. However, the increasing of m_1 may increase the average transient time for synchronization because in that case the chaotic trajectories need to get closer to each other in the phase space before the PLL stability condition (7) is satisfied. The decrease of Δf_{inf} reduces the transmitting rate.

One of the most important characteristics of a communication system performance is the bit error rate as a function of the signal-to-noise ratio or the ratio of energy per bit to the noise spectral density (E_b/N_0). It provides a quantitative measure for the efficiency of the modulation-demodulation scheme used in the system. We studied BER performance of the CFM-BFSK system with an additive white Gaussian noise in the channel (see Fig. 1) using computer simulations. As CHOs we used the Rossler oscillators (8). The parameters of the system were set to the values given in the caption to Fig. 2. The results are shown in Fig. 3. The BER performance of the CFM scheme was approximately 5 dB worse than BPSK and $\approx$1 dB worse than an optimal noncoherent FSK scheme (at BER$=10^{-3}$), which is a small loss in efficiency caused mainly by imperfect synchronization of the chaotic oscillators. The BER efficiency of this scheme is $\approx$3 dB better than in other efficient modulation schemes suggested for chaotic signals: chaotic pulse position modulation[7] and differential chaotic shift key-in modulation.[3,10] The BER performance depends on many parameters of the system, such as the bandwidth of the chaotic signals, the information bit rate, the frequency deviations m_1x_1 and m_2b_i, and the PLL damping λ. Although for the sake of simplicity we used a first-order RC LPF, the overall performance of the system can be improved by implementing more complicated LPF circuitry. For example, an active LPF with variable parameters, whose bandwidth is wide while the PLL is not locked and narrows down as the VCOs get synchronized, can significantly reduce the transient times and improve the BER performance.

III. SUPERHETERODYNE RECEIVER FOR CFM SIGNALS

In order to realize the processing gain advantage of spread spectrum signals the receiver should use a corresponding despreading technique to convert the broad-band transmitted signal into the bandwidth of the bitstream. The receiver shown in Fig. 1 converts the received signal into a relatively narrow-band combination of the information and chaos synchronization error signals and, therefore, has a processing gain. However, the main amplification in this receiver is done with a broad-band signal, which makes it difficult to avoid interference, especially in ultra-wide-band systems. In conventional narrow-band receivers the input frequency is first downconverted using a local oscillator and then the signal is amplified at the intermediate frequency (IF). This principle, viz. superheterodyne reception, has been used in spread spectrum systems with periodic frequency modulation.[20] In these systems the local oscillator frequency follows the frequency of the transmitted signal with a constant offset ΔF equal to the IF amplifier frequency. A similar scheme can be used with CFM signals: if the local VCO is modulated by the chaotic signal synchronously with the transmitter VCO, and the central frequencies are shifted by $\Delta F = F_t^0 - F_r^0$, then the input broadband CFM signal can be downconverted in a mixer to a narrowband IF signal with the central frequency $\Delta F = \text{const}$.

The block diagram of the proposed superheterodyne CFM receiver is shown in Fig. 4. It includes all the elements shown in Fig. 1 and an additional voltage controlled oscillator with shifted central frequency (VCO^1), downconverter (DC), IF amplifier and bandpass filter (AF), upconverter (UC), and delay lines ($\tau_{1,2}$). The received signal frequency $\omega_t = \dot{\varphi}_t = \omega_0(1 + m_1x_t(t) + m_2b_i)$ is downconverted in the DC using the VCO^1 signal with frequency $\omega_r^1 = \dot{\varphi}_r^1 = \omega_0(1 + m_1x_r(t)) - \Delta\omega$ to the IF frequency $\omega_{if} = \Delta\omega + \omega_0(m_1(x_t - x_r) + m_2b_i)$. After that the IF signal is amplified and filtered in the AF. In order to get the best possible synchronization, the VCOs in the transmitter and receiver should be identical, and therefore work in the same frequency range. The upconverter reconstructs the frequency of received signal. The delays τ_1 and τ_2 compensate the group delay τ in the AF. If $\tau_1 = \tau_2 = \tau$ the phase discriminator receives delayed versions of the signals, and therefore the PD output u_{PD} is determined by the delayed phase shift between the receiver and the transmitter signals: $u_{\text{PD}} = A\sin(\varphi_t(t-\tau) - \varphi_r(t-\tau)) = A\sin(\varphi(t-\tau))$. Taking into account that x_t, x_r, and b_i are approximately constant in the fast subsystem time scale, the PLL equations (4) can be written as one equation of the form:

Downloaded 05 Jul 2005 to 132.239.86.32. Redistribution subject to AIP license or copyright, see http://chaos.aip.org/chaos/copyright.jsp

$$\ddot{\varphi} + \lambda\dot{\varphi} + \sin(\varphi(t-\tau)) = \gamma \tag{9}$$

where $\gamma = b_i + \beta(x_t - x_r)$.

Equation (9) has two steady states: $\varphi_s = \arcsin(\gamma)$ and $\varphi_u = \pi - \arcsin(\gamma)$, $|\gamma| \leq 1$, $\lambda > 0$. The steady state φ_s can be stable in a certain parameter range, and φ_u is always unstable. The stability of φ_s can be studied using linearization of Eq. (9):

$$\ddot{\xi} + \lambda\dot{\xi} + \sqrt{1-\gamma^2}\,\xi(t-\tau) = 0, \tag{10}$$

where $\xi = \varphi - \varphi_s$.

The corresponding characteristic equation reads:

$$s^2 + \lambda s + \sqrt{1-\gamma^2}\exp(-s\tau) = 0. \tag{11}$$

Following the direct method for stability test (see, for example, Ref. 21) the stability border can be found by substituting $s = j\omega$ into the characteristic equation (11), which leads to

$$\begin{aligned} &-\omega^2 + \sqrt{1-\gamma^2}\cos(\omega\tau) = 0, \\ &\lambda\omega - \sqrt{1-\gamma^2}\sin(\omega\tau) = 0. \end{aligned} \tag{12}$$

Using $z = \omega\tau$ as a parameter, the stability border on the (λ, τ) plane can be written as a parametric curve:

$$\begin{aligned} \tau &= \frac{z}{\sqrt{\sqrt{1-\gamma^2}\cos(z)}}, \\ \lambda &= \frac{\sqrt{1-\gamma^2}\sin(z)}{\sqrt{\sqrt{1-\gamma^2}\cos(z)}}. \end{aligned} \tag{13}$$

As $z \to \pm\infty$, the curve (13) has infinite number of branches, the first five of them corresponding to $-15 < z < 15$ are shown in Fig. 5(a). The branch with the smallest delay depicted by a dashed line for the different values of γ is shown in Fig. 5(b). Since the steady state φ_s is stable for $\tau = 0$, $\lambda > 0$ it remains stable in the region below the corresponding curve $\tau = \tau(\lambda, \gamma)$ in Fig. 5. The system becomes unstable with the minimal delay if $\gamma = 0$. Choosing the values of parameter λ such that $\lambda > \tau(\lambda, 0)$ guarantees the local stability of the steady state φ_s for the maximal range of γ, and therefore improves synchronization of the chaotic oscillators.

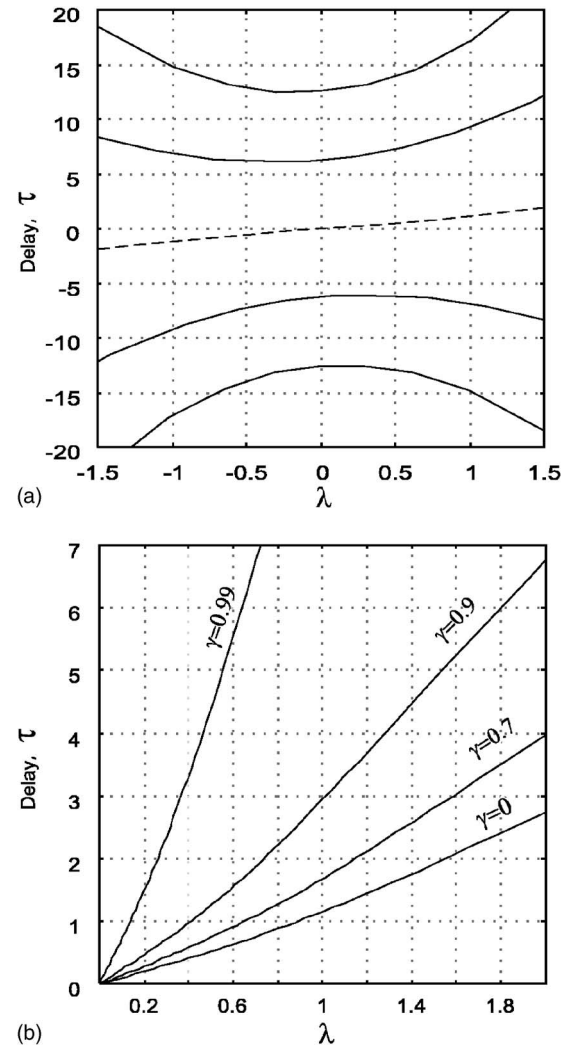

FIG. 5. The multiple branches of the curve (13) (a); the PLL stability borders for the smallest delay and different values of γ (b).

IV. CONCLUSION

In this paper we have presented a spread spectrum communication system that uses CFM BFSK for transmitting a binary information signal. We have shown that the receiver synchronizes to the transmitter and that the synchronization regime is stable and robust. In the synchronous regime the information is decoded by the PLL. The BER performance of CFM BFSK with additive white Gaussian noise in the channel is only 1 dB worse when compared with a conventional noncoherent BFSK modulation scheme. With the addition of a VCO and frequency converters, a superheterodyne receiver can be built for CFM signals. Here the broad-band transmitted signal is converted into a narrow-band IF signal for filtering and amplification. We have demonstrated that the superheterodyne receiver can be synchronized to the transmitter if the delay in the IF amplifier is sufficiently small.

In traditional frequency hopping (FH) systems the frequency of the transmitted signal is modulated by a pseudorandom sequence. The receiver uses the same sequence synchronously with the transmitter to modulate the local oscillator frequency. The information is usually incorporated into the transmitted signal using BFSK modulation (in noncoherent FH). FH and especially fast discrete frequency hopping, with at least several hops per information bit, provides a high level of resistance against interference and fading. It is known however that FH systems have two main problems: spectral splatter and transient mismatch between the transmitter and receiver synthesizers. Besides the common solutions used to reduce these effects, such as voltage controlled oscillator (VCO) pretuning, swapping ("ping-ponging") multiple synthesizers, and transient hop interval dwell and guard times (see Ref. 22 and references therein), the alternative "interpolated frequency hopping" technique was recently proposed in Ref. 22. The hopping code in the interpolated frequency hopping transceiver is interpolated by the digital

Downloaded 05 Jul 2005 to 132.239.86.32. Redistribution subject to AIP license or copyright, see http://chaos.aip.org/chaos/copyright.jsp

filter, so instead of abrupt hops, the frequency varies smoothly in time. This results in better synchronization and therefore lower BER. As we have demonstrated in this paper and in our previous work,[12] an analog chaotic oscillator can be used for the smooth frequency modulation similar to interpolated frequency hopping. An additional benefit of employing analog chaotic oscillators is that they may exhibit self-synchronization, thus eliminating the need for special synchronizing sequences. The transmitter and the receiver in a CFM system can be synchronized using a simple PLL-based circuit.

ACKNOWLEDGMENTS

The authors are indebted to H.D.I. Abarbanel, L. Larson, and M.M. Sushchik for numerous discussions on the subject. This work was supported by the U.S. Army Research Office under MURI Grant No. DAAG55-98-1-0269 and by the U.S. Department of Energy under Grant No. DOE/DE-FG02-04ER46135.

[1]R. A. Scholts, "The origins of spread spectrum communications," IEEE Trans. Commun. **COM-30**, 822–854 (1982); M. K. Simon, J. K. Omura, A. R. Scholtz, and B. K. Levitt, *Spread Spectrum Communications* (Computer Science, Rockville, MD, 1985).

[2]L. M. Pecora and T. L. Carroll, "Synchronization in chaotic systems," Phys. Rev. Lett. **64**, 821–824 (1990).

[3]G. Kolumban, M. P. Kennedy, and L. O. Chua, "The role of synchronization in digital communications using chaos. II. Chaotic modulation and chaotic synchronization," IEEE Trans. Circuits Syst., I: Fundam. Theory Appl. **45**, 1129–1140 (1998).

[4]M. P. Kennedy and G. Kolumban (editors), "Noncoherent chaotic communications (special issue)," IEEE Trans. Circuits Syst., I: Fundam. Theory Appl. 47, (2000).

[5]L. Kocarev, G. M. Maggio, M. Ogorzalek, L. M. Pecora, and K. Yao (editors), "Application of chaos in modern communication systems (special issue)," IEEE Trans. Circuits Syst., I: Fundam. Theory Appl. 48, (2001).

[6]C.-C. Chen and K. Yao, "Stochastic-calculus-based numerical evaluation and performance analysis of chaotic communication systems," IEEE Trans. Circuits Syst., I: Fundam. Theory Appl. **47**, 1663–1672 (2000).

[7]M. Sushchik, N. Rulkov, L. Larson, L. Tsimring, H. Abarbanel, K. Yao, and A. Volkovskii, "Chaotic pulse position modulation: A robust method of communicating with chaos," IEEE Commun. Lett. **4**, 128–130 (2000); N. F. Rulkov, M. M. Sushchik, L. S. Tsimting, and A. R. Volkovskii, "Digital communication using chaotic-pulse-position modulation," IEEE Trans. Circuits Syst., I: Fundam. Theory Appl. **48**, 1436–1444 (2001).

[8]Z. Galias and G. M. Maggio, "Quadrature chaos-shift keying: Theory and performance analysis," IEEE Trans. Circuits Syst., I: Fundam. Theory Appl. **48**, 1510–1519 (2001).

[9]G. M. Maggio and Z. Galias, "Applications of symbolic dynamics to differential chaos shift keying," IEEE Trans. Circuits Syst., I: Fundam. Theory Appl. **49**, 1729–1735 (2002).

[10]M. M. Sushchik, L. Sh. Tsimring, and A. R. Volkovskii, "Performance analysis of correlation-based communication schemes utilizing chaos," IEEE Trans. Circuits Syst., I: Fundam. Theory Appl. **47**, 1684–1691 (2000).

[11]T. Schimming and M. Hasler, "Optimal detection of differential chaos shift keyin," IEEE Trans. Circuits Syst., I: Fundam. Theory Appl. **47**, 1712–1719 (2000).

[12]A. R. Volkovskii and L. Sh. Tsimring, "Synchronization and communication using chaotic frequency modulation," Int. J. Circuit Theory Appl. **27**, 569–576 (1999).

[13]L. Larger, J. P. Goedgebuer, V. S. Udaltsov, and W. T. Rhodes, "Radio transmission system using FM high dimensional chaotic oscillator," Electron. Lett. **37**, 594–595 (2001).

[14]W. P. Torres, A. V. Oppenheim, and R. R. Rosales, "Generalized frequency modulation," IEEE Trans. Circuits Syst., I: Fundam. Theory Appl. **48**, 1405–1412 (2001).

[15]L. Cong and S. Songgeng, "Chaotic frequency hopping sequences," IEEE Trans. Commun. **46**, 1433–1437 (1998).

[16]L. Cong and W. Xiaofu, "Design end realization of an FPGA-based generator for chaotic frequency hopping sequences," IEEE Trans. Circuits Syst., I: Fundam. Theory Appl. **48**, 521–532 (2001).

[17]L. M. Pecora, T. L. Carroll, G. A. Johnson, and D. J. Mar, "Fundamentals of synchronization in chaotic systems, concepts, and applications," Chaos **7**, 520–543 (1997).

[18]N. F. Rul'kov, A. R. Volkovskii, A. Rodriguez-Lozano, E. Del Rio, and M. G. Velarde, "Mutual synchronization of chaotic self-oscillators with dissipative coupling," Int. J. Bifurcation Chaos Appl. Sci. Eng. **2**, 669–676 (1992).

[19]S. Haykin, *Digital Communications* (Wiley, New York, 1988).

[20]N. Marchand, "Radio Receiver," US Patent No. 2,416,336, Feb. 25, 1947.

[21]K. Gu, V. L. Kharitonov, and J. Chen, *Stability of Time-Delayed Systems* (Birkhuser, Boston, 2003).

[22]N. M. Filiol, C. Plett, T. Riley, and M. A. Copeland, "An interpolated frequency-hopping spread-spectrum transceiver," IEEE Trans. Circuits Syst., I: Fundam. Theory Appl. **45**, 3–12 (1998).

Downloaded 05 Jul 2005 to 132.239.86.32. Redistribution subject to AIP license or copyright, see http://chaos.aip.org/chaos/copyright.jsp