Phased array beamforming using nonlinear oscillators

Michael Gabbay[a], Michael L. Larsen[a], and Lev S. Tsimring[b]

[a]Information Systems Laboratories, Inc., 10070 Barnes Canyon Road, San Diego, CA 92121
[b]Institute for Nonlinear Science, University of California, San Diego, La Jolla, CA 92093-0402

ABSTRACT

We describe a concept in which an array of coupled nonlinear oscillators is used for beamforming in phased array receivers. The signal that each sensing element receives, beam steered by time delays, is input to a nonlinear oscillator. The nonlinear oscillators for each element are in turn coupled to each other. For incident signals sufficiently close to the steering angle, the oscillator array will synchronize to the forcing signal whereas more obliquely incident signals will not induce synchronization. The beam pattern that results can show a narrower mainlobe and lower sidelobes than the equivalent conventional linear beamformer. We present a theoretical analysis to explain the beam pattern of the nonlinear oscillator array.

Keywords: beamforming, array processing, nonlinear signal processing, coupled oscillators, nonlinear dynamics

1. INTRODUCTION

The phenomenon of synchronization of nonlinear oscillators is believed to play an important role in the processing of sensory information in biological systems.[1] Examples include image processing in the visual cortex[2] and acoustic sensing in the cochlea.[3] Synchronization can result from the application of an external periodic forcing to a nonlinear oscillator or from the mutual coupling of nonlinear oscillators. In this paper, we describe a concept for a phased array receiver beamformer that relies upon both of these sources of synchronization: incoming signals act as external forcings upon an array of coupled oscillators and the interaction of the two effects determines the array response as the signal angle of incidence is varied.[4,5] We use this concept to explore the issues involved with the incorporation of nonlinear dynamical systems into phased array processing architectures. Such systems hold the potential for improving some aspects of beamforming such as resolution and interference rejection relative to conventional beamformers. Given its relevance to biological signal processing and the computational- intensiveness of systems of coupled differential equations, it is envisioned that real-time operation of the beamforming concept described here would require implementation in analog form such as analog VLSI. The use of coupled oscillator arrays for to steer beams for phased array transmitters has been studied experimentally and theoretically.[5–7] In this paper, however, we are concerned with the receiver problem, and will present analytical and numerical results concerning the response of the nonlinear beamformer to incident signals and noise.

2. BEAMFORMER DESCRIPTION

The conceptual design for the nonlinear oscillator array (NOA) beamformer is shown in Fig. 1 for the case of a narrowband receiver. The design is similar to conventional delay-and-sum beamformers except for the addition of a chain of coupled nonlinear oscillators prior to the signal summation.

Sensors and beam steering: The H_i are sensors, e.g., hydrophones, antenna array elements, etc., whose responses are assumed to be linear and have spacing d. Denoting the phase difference between adjacent sensor elements by $\Delta\varphi$, a plane wave with wavenumber k incident at an angle θ relative to broadside will yield

$$\Delta\varphi = kd(\sin\theta - \sin\theta_0), \tag{1}$$

Further author information: Send correspondence to M.G: E-mail: mgabbay@islinc.com

Advanced Signal Processing Algorithms, Architectures, and Implementations XIV,
edited by Franklin T. Luk, Proc. of SPIE Vol. 5559 (SPIE, Bellingham, WA, 2004)
0277-786X/04/$15 · doi: 10.1117/12.562903

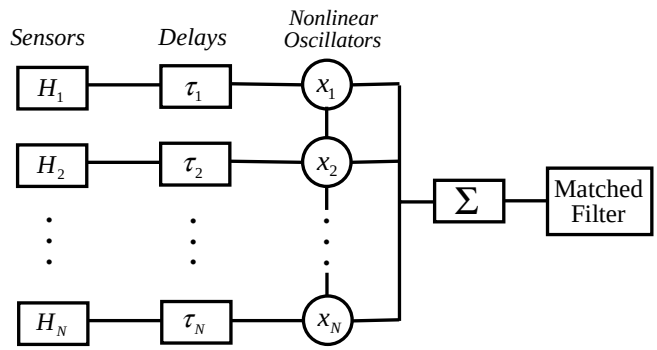

Figure 1. Nonlinear oscillator beamformer for receiving narrowband signals

where θ_0 is the steering angle of the array. Beam steering is accomplished as in conventional time-domain beamformers via the insertion of delays τ_i of the sensor outputs. Separate beams will be formed in parallel so that the architecture in Fig. 1, with the exception of the sensors, is duplicated for each beam.

Nonlinear oscillator array: The (delayed) output of each sensor, H_i, is input as a driving force, $f_i(t)$, to its respective nonlinear oscillator whose state we denote by x_i. The components of the state vector x_i may be taken as the various voltages describing the circuit dynamics. The dynamics of each oscillator is governed by a system of nonlinear ordinary differential equations of the form

$$\frac{dx_i}{dt} = F(x_i, \rho_i) + \sum_j \kappa_{ij} x_j + f_i(t),$$

where $F(x_i, \rho_i)$ is a nonlinear function of x_i. The parameters ρ_i are chosen so that, when uncoupled, each oscillator will undergo oscillations at its natural angular frequency ω_i. The second term on the righthand side represents coupling between elements where κ_{ij} is the strength of the coupling from element j to element i. Since we are considering narrowband signals, the forcing term, $f_j(t)$, can be considered to be a slowly modulated function around the carrier frequency, Ω.

Summer and matched filter: The outputs of the nonlinear oscillator array are summed and then input to a matched filter. The outputs are summed according to

$$s(t) = \sum_i w_i g(x_i)$$

where $g(x_i)$ is a linear function of one or more of the components of x_i. The weights can be used to shade the array if so desired. For this paper, we will take $g(x_i) = x_i$ and assume that the array is unshaded so that $w_i = 1/N$ for all elements. The matched filter then correlates the beamformer output, $s(t)$, with the signal of interest such as the transmitted waveform for active systems. The inclusion of the matched filter here is for specificity — alternative signal processing algorithms may be used for processing the beamformer output as appropriate.

3. ARRAY RESPONSE

The NOA beamformer concept relies on the fact that the synchronization of an array of forced coupled nonlinear oscillators to the forcing signal depends on the signal's phase offset between elements; equivalently, the transition between synchronized and unsynchronized states depends upon the angle of incidence of the incoming signal. The oscillators are active devices which, in the absence of an incoming signal, oscillate at their natural frequencies. The presence of an incoming signal sufficiently close to the steering angle causes the array to phase lock to the signal. This transfers energy that would have been present in the array's natural oscillations into the frequency band of the incident signal.

We now describe these dynamics in terms of the beamformer parameters. A monochromatic plane wave of frequency Ω_s, wavenumber k, and amplitude a_0 is taken to be incident upon the array at direction θ. For simplicity, we assume that the array is steered to broadside ($\theta_0 = 0$). The parameters ρ_i or the coupling strengths κ_{ij} can be set so that when the phase lag between oscillators is less than a certain critical phase lag, $|\Delta\varphi| < \Delta\varphi_c$, the array synchronizes and oscillates at the incident frequency Ω_s. By (1), this phase lag condition is equivalent to a limitation on the angle of incidence, $|\theta| < \theta_c$. When the phase lag exceeds $\Delta\varphi_c$ there is no synchronization with the incoming signal. Instead, the individual oscillators oscillate at or near the average or compromise frequency, $\overline{\omega}$, of their natural frequencies and the phase relationships between them are not constant. Consequently, a signal incident within the mainlobe of the NOA beamformer, $|\theta| < \theta_c$, has a power spectrum centered around the plane wave frequency of interest, whereas a signal incident in the sidelobes, $|\theta| > \theta_c$, has a spectrum distributed primarily around $\overline{\omega}$ with side peaks resulting from the nonlinear mixing between the incident and natural frequencies. Thus, the location of the peak in the power spectrum can be used to determine whether a signal is incident in the mainlobe or the sidelobes. This is not the case for conventional linear beamforming where the array responds at the signal frequency regardless of the angle of incidence. The NOA beamformer responds in a similar fashion to a modulated signal such as an FM chirp — the oscillators follow the modulations only when the signal is incident in the mainlobe. We remark that, in order for the dynamics to play out as just described, the natural frequencies ω_i must not be too disparate from each other or the signal frequency Ω_s.

We have implemented a numerical simulation of the response of the nonlinear oscillator array to an incident narrowband signal. A system of N nonlinear oscillators with nearest-neighbor coupling was simulated. The dynamics obeyed by each oscillator were chosen to be that of a forced oscillator in the vicinity of a Hopf bifurcation.[1] This would correspond to a weakly nonlinear van der Pol oscillator for instance.[8] The equations for the interior oscillators are given by

$$\frac{dz_n}{dt} = (1 + i\omega_0)z_n - |z_n|^2 z_n + \kappa(z_{n+1} + z_{n-1} - 2z_n) + f(t)e^{i(\Omega_s t + \phi_n)}, \tag{2}$$

where z_n is a complex scalar describing the state of the n-th oscillator and κ is the coupling coefficient, Ω_s, and ϕ_n are the input signal frequency and phase, and $f(t)$ is slowly varying complex amplitude factor. The equations are dimensionless for simplicity. The oscillators on the boundary satisfy free-end conditions:

$$\frac{dz_1}{dt} = (1 + i\omega_0)z_1 - |z_1|^2 z_1 + \kappa(z_2 - z_1) + f(t)e^{i(\Omega_s t + \phi_1)}, \tag{3}$$

$$\frac{dz_N}{dt} = (1 + i\omega_0)z_N - |z_N|^2 z_N + \kappa(z_{N-1} - z_N) + f(t)e^{i(\Omega_s t + \phi_N)}. \tag{4}$$

To represent an incident plane wave in the above equations, we set the amplitude to be a constant $f(t) = a$ and we choose a constant phase offset, $\Delta\phi$ between the forcing signals of adjacent elements, so that $\phi_n = (n-1)\Delta\phi$. For an array with half-wavelength spacing, steered to broadside, $\Delta\phi = \pi \sin\theta$ where θ is the angle of incidence.

The dynamics of an eight-element oscillator array are shown in Fig. 2 for randomly chosen initial conditions for the oscillator states, z_n. The case for no signal input is shown in Fig. 2(a). The array rapidly synchronizes to the natural frequency, and the oscillator phases relative to the natural frequency frame are all constant and essentially equal (the two bunches of lines in the bottom panel are separated by very nearly 2π). Figure 2(b) shows the response for an incident plane wave signal with amplitude above that required for synchronization of a lone oscillator. The array synchronizes to the forcing signal frequency as expected; the peak of the output power spectrum has shifted to the signal frequency and all the oscillators maintain a constant phase relationship with each other as the phase in the bottom panel now advances at the difference between the signal and natural frequencies. If we now let the same strength signal be incident in the sidelobe region, as in Fig. 2(c), the array no longer synchronizes to the signal frequency, but rather oscillates around the natural frequency. The primary peak in the power spectrum is at the natural frequency. The side peaks are at multiples of the difference between the the natural and signal frequencies and represent the combination tones resulting from the nonlinear interactions of these two frequencies. The phase shown in the bottom panel indicates that the phase differences between the oscillators are not constant although they are bounded. The changes in instantaneous frequency as seen by the oscillations in the phase are a manifestation of the nonlinear interaction tones.

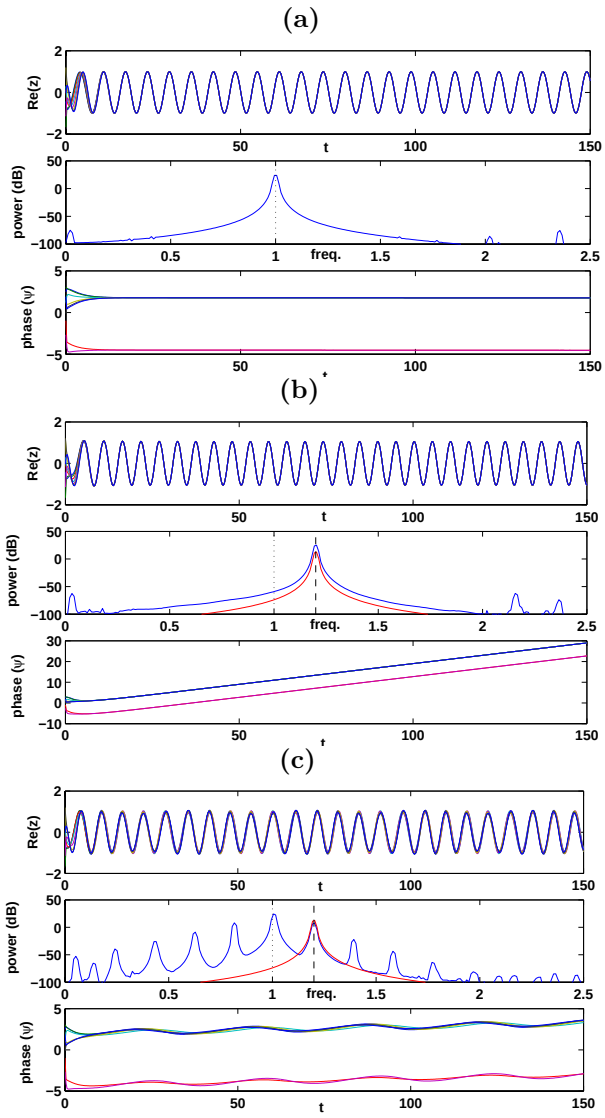

Figure 2. Dynamics of an eight-element, nearest-neighbor coupled, nonlinear oscillator array: (a) no incident signal, $a = 0$; (b) signal incident at broadside, $\Delta\phi = 0$, with amplitude, $a = 0.25$; (c) same amplitude signal incident at the peak of the first sidelobe, $\Delta\phi = 3\pi/N$ ($\theta = 22^o$). Top panel shows time series of the real part of z_i for each oscillator. The middle panel is the power spectrum of the output and the incident signal (red curve in (b) and (c)); the dotted line is the natural frequency and the dashed line is the signal frequency. Bottom panel shows the phases of the oscillators relative to a frame rotating at the natural frequency. $\omega_0 = 1.0$, $\Omega_s = 1.2$ and the coupling strength, $\kappa = 2.0$.

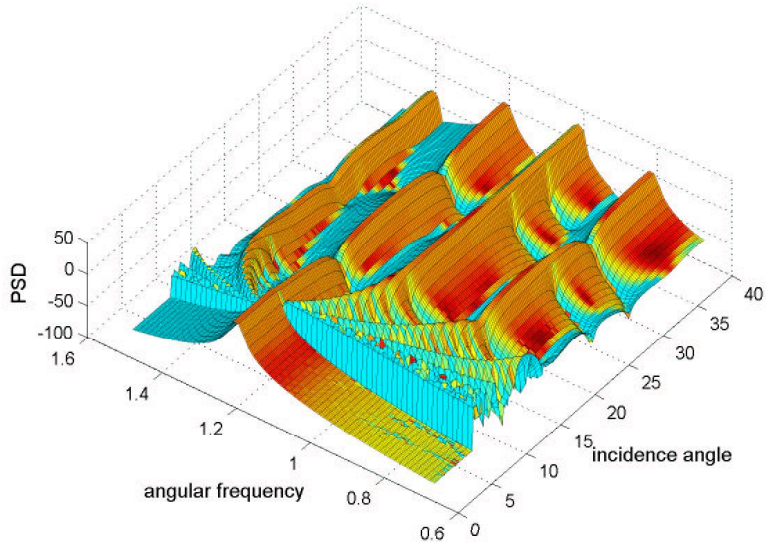

Figure 3. Power spectral density of array response to plane wave signal showing synchronized region in mainlobe and unsynchronized region in sidelobes. The angular frequency of the incident signal is $\Omega_s = 1.2$.

Figure 3 shows the power spectrum as a function of the angle of incidence. For small angles, the peak is at the signal frequency of 1.2 (in dimensionless units) indicating synchronization. At an angle of $\theta_c = 5.2^o$, there is an abrupt loss of synchronization. In the transition region, just past this critical angle, the spectrum is broadband and the array dynamics are quasiperiodic, marked by the occurrence of phase slips. After this transition region, the peak of the power spectrum shifts to the natural frequency and the dynamics are as in Fig. 2(c). By taking a cross-section of Fig. 3 at the signal frequency, we can plot a beam pattern for the NOA beamformer as is shown in Fig. 4. Comparing this with the equivalent 8-element unshaded conventional beam pattern, we see that the main lobe is narrower, which results from the fact that the transition from synchronization at $\theta_c = 5.2^o$ occurs well within the first null of the conventional, linear beamformer at $\theta_c = 14.5^o$. This indicates that the NOA beamformer has improved resolution ability. The flatness of the NOA mainlobe, which results from the coupling reducing the phase lag between oscillators to below that of the incident signal, is also a desirable property as it allows for a more uniform response to mainlobe signals. We also see that the sidelobes are lower relative to the conventional beamformer which indicates that the NOA beamformer is less responsive to sidelobe signals. The presence of the sidelobes in the NOA beamformer results from the combination tone at the signal frequency in the unsynchronized state of Fig. 2(c). The simultaneous reduction of mainlobe width and sidelobe levels is not possible with linear beamformers, where improvements in one always come at the cost of the other. However, due to the nonlinearity, the NOA response can change significantly as the signal parameters are varied and hence its beam pattern provides less information about the overall performance than for the linear case. We note that the NOA beam pattern obtained using the general equations for oscillators in the vicinity of a Hopf bifurcation, Eqs. (2)– (4), has also been verified in a specific case by direct simulation of the equivalent Van der Pol system.

4. ANALYSIS OF BEAMFORMER RESPONSE

In this section, we provide a theoretical basis for understanding the dynamics of the NOA beamformer. Of particular importance is an analytical explanation of the two most salient features of the beam pattern: the flat, narrow mainlobe and the lower sidelobes.

4.1. Single Oscillator Dynamics

We first discuss the dynamics of a single nonlinear oscillator with an eye toward motivating the relationship that predicts when synchronization will occur. Ignoring the coupling in Eq. (2), the equation for a single harmonically

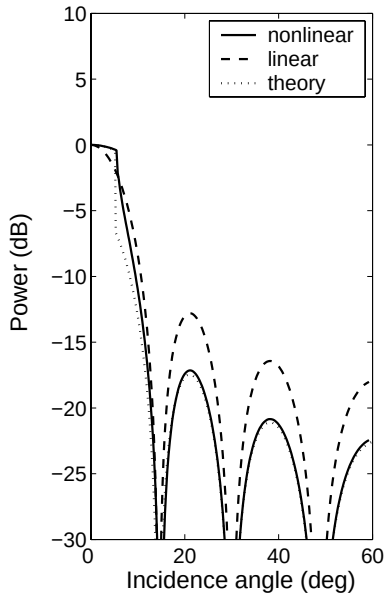

Figure 4. Normalized beam patterns of NOA beamformer (solid) and conventional beamformers (dashed). Approximate theoretical solution for NOA beam pattern corresponding to Eqs. (19) and (20) is also shown (dotted).

forced oscillator is

$$\frac{dz}{dt} = (1 + i\omega_0)z - |z|^2 z + ae^{i\Omega_s t}, \tag{5}$$

where z is complex, ω_0 is the oscillator natural frequency, a is the forcing signal amplitude, and Ω_s is the forcing signal frequency. It can be readily verified that the solution to the unforced system ($a = 0$) is

$$z(t) = e^{i\omega_0 t}, \tag{6}$$

so we see that the oscillator oscillates at its natural frequency with unit amplitude in the absence of forcing. For a strong enough forcing signal amplitude, the oscillator will synchronize to the forcing frequency, Ω_s. Synchronization will occur as long as the signal amplitude, a, is larger in magnitude than that of the difference between the forcing and natural frequencies, known as the *detuning*, $\nu = \Omega_s - \omega_0$. If the signal amplitude is below the detuning, then the oscillator will no longer be phase-locked to the input signal. Just below the threshold, the dynamics will be quasiperiodic. As the input amplitude drops further, the oscillations occur at essentially the natural frequency but there is a slight irregularity of the cyclical behavior and a multi-peaked power spectrum as in Fig. 2(c), where the central peak is at ω_0 with smaller peaks located away from ω_0 at multiples of the detuning, including, importantly, a peak at Ω_s. The phase relative to the natural frequency frame consists of nearly sinusoidal oscillations superimposed on a small linear drift. These phase oscillations occur at the detuning frequency and are responsible for the power spectral peak at Ω_s.

In order to understand the origin of the synchronization condition, we turn to perturbation theory. This requires that we assume that the forcing amplitude is small relative to the unforced natural oscillation amplitude, i.e., $a \sim \epsilon$ where $\epsilon \ll 1$ and that the detuning is also small, $\nu \sim \epsilon$. The form of the approximate solution then can be written in terms of the unforced solution, (6), and a correction due to the forcing,

$$z(t) \approx (1 + u(t))e^{i(\omega_0 t + \psi(t))}, \tag{7}$$

where u can be considered as a small correction ($u \sim \epsilon$) to the amplitude and ψ as a slow correction ($d\psi/dt \sim \epsilon$) to the phase. It is important to note the difference in status between the amplitude and phase corrections. Since u is added to the unperturbed amplitude, 1, it can only lead to small corrections ($\sim \epsilon$) whereas $e^{i\psi(t)}$ multiplies the unperturbed solution and can therefore lead to large deviations from it (~ 1) as the slow phase corrections

accumulate over time. This difference stems from the fact that the amplitude of the limit cycle oscillations is absolutely stable so that a kick to it will decay back to one, but the phase is only neutrally stable — a kick to the phase will not decay since all phases along the natural oscillation cycle are equally permissible. The ability of the phase to accommodate these shifts is what enables synchronization to occur.

The equation for the phase can be formally derived by removing the resonant terms which appear in the inhomogeneous part of the linear differential equation for u, obtained by substituting (7) into (5) and retaining terms of order ϵ. However, a simpler albeit less rigorous way of obtaining the phase equation is to neglect the amplitude perturbation, u, altogether when substituting (7) into (5), which is reasonable since the phase, and not the amplitude, is what is driving the synchronization process. This yields

$$\frac{d\psi}{dt} = a\sin(\nu t - \psi). \tag{8}$$

Using the change of variables, $\tilde{\psi} = \psi - \nu t$ (i.e., shifting to a frame rotating at the forcing frequency Ω_s), yields a more convenient equation

$$\frac{d\tilde{\psi}}{dt} = -\nu - a\sin\tilde{\psi}. \tag{9}$$

This equation enables us to understand why there is an amplitude threshold required for synchronization to the forcing frequency. Synchronization demands that the phase relative to the forcing frequency, $\tilde{\psi}$, be constant ($d\psi/dt = 0$). Since $\sin\tilde{\psi}$ cannot exceed one, a is seen to be the maximum rate of phase change produced by the forcing. If $a < |\nu|$, then the forcing will not be able to match the rate of phase change caused by the difference in the natural and forcing frequencies. Hence, we must have $a \geq |\nu|$ for synchronization to occur. If the forcing amplitude is above this synchronization threshold, then the constant phase offset, χ, between the oscillator response, z, and the forcing signal can be found from setting $d\tilde{\psi}/dt = 0$ so that

$$\sin\chi = \frac{-\nu}{a}. \tag{10}$$

In the phase frame rotating at the natural frequency, this gives $\psi = \nu t + \chi$.

4.2. Coupled Oscillator Array Dynamics

We now return to our array of N coupled oscillators with nearest-neighbor coupling as in Eqs. (2) – (4) and present an informal derivation of the synchronization condition in the array, which determines the width of the mainlobe. The output, $s(t)$, of the array is formed by averaging the oscillator responses,

$$s(t) = \frac{1}{N}\sum_{n=1}^{N} z_n(t). \tag{11}$$

It is clear that if we sum up the equations for all the elements, (2)–(4), and divide by N, then we will obtain ds/dt on the left-hand side. Furthermore, it can be shown that this summation causes the coupling terms to vanish. The coupling term in Eq. (2) can be rewritten as $\kappa(z_{n+1} + z_{n-1} - 2z_n) = \kappa(z_{n+1} - z_n) + \kappa(z_{n-1} - z_n)$, which can then be summed as follows:

$$\begin{aligned} \text{coupling sum} &= \kappa\sum_{n=1}^{N-1}(z_{n+1} - z_n) + \kappa\sum_{n=2}^{N}(z_{n-1} - z_n) \\ &= \kappa\sum_{n=1}^{N-1}(z_{n+1} - z_n) + \kappa\sum_{m=1}^{N-1}(z_m - z_{m+1}) \\ &= 0. \end{aligned} \tag{12}$$

Using this result yields the following equation for the array output:

$$\frac{ds}{dt} = (1 + i\omega_0)s - \frac{1}{N}\sum_{n=1}^{N}|z_n|^2 z_n + \frac{1}{N}\sum_{n=1}^{N} a e^{i(\Omega_s t + (n-1)\Delta\phi)}. \tag{13}$$

Note that the coupling has not been eliminated from this equation since it appears implicitly in the individual oscillator responses, z_n. However, if we assume that the coupling is strong enough relative to the forcing signal amplitude, a, so that the individual oscillator amplitudes are all the same, then we can set them equal to the average amplitude, i.e., $|z_n| = |s|$. Simulation results, such as the time series shown in Fig. 2, show that this is generally a reasonable assumption for small enough forcing. Accordingly, we can now write the equation for s as

$$\frac{ds}{dt} \approx (1 + i\omega_0)s - |s|^2 s + \frac{ae^{i\Omega_s t}}{N} \sum_{n=1}^{N} e^{i(n-1)\Delta\phi}. \tag{14}$$

This is very similar to the equation for a single forced oscillator, (5), except that there is a sum over harmonic forcing terms for all the oscillators rather than just one. However, this sum can also be seen to be simply the output of an unshaded linear beamformer. The space factor can be written in the usual manner as

$$\begin{aligned} \frac{1}{N} \sum_{n=1}^{N} e^{i(n-1)\Delta\phi} &= \frac{\sin(N\Delta\phi/2)}{N \sin(\Delta\phi/2)} e^{i(N-1)\Delta\phi/2} \\ &\equiv p(\Delta\phi) e^{i\Gamma}, \end{aligned} \tag{15}$$

where we have used the function $p(\Delta\phi)$ to denote the sine ratio factor and Γ for the phase in the exponential. Finally, substituting this into (14) gives

$$\frac{ds}{dt} \approx (1 + i\omega_0)s - |s|^2 s + ap(\Delta\phi) e^{i(\Omega_s t + \Gamma)}. \tag{16}$$

Comparing the equations for the array output, (16), and the single oscillator, (5), we see that they are of similar form; apart from an unimportant phase shift (Γ), the equations are the same except that the forcing amplitude, a, in the single oscillator equation has been replaced by an effective forcing amplitude, $ap(\Delta\phi)$, in the array output equation. This implies that the array output will also obey a phase equation of the form (8) but again with the effective signal amplitude instead of a. The condition for synchronization is therefore expected to be that the effective forcing amplitude must be at least as large as the detuning frequency, i.e., $|ap(\Delta\phi)| \geq |\nu|$. Hence, the transition from synchronized to unsynchronized behavior can be made for an arbitrarily small phase offset, $\Delta\phi$, or angle of incidence, θ. This, therefore, is the origin of the ability of the nonlinear beamformer to have a narrower mainbeam than its linear counterpart. The critical phase offset, $\Delta\phi_c$, at which this transition occurs can be approximately found from $p(\Delta\phi_c) = \nu/a$. This formula is in good agreement with the results of a formal numerical stability analysis as well as with direct simulation of Eqs. (2)–(4). For an eight-element array with $a = 0.25$, $\nu = 0.2$, the approximate formula yields $\Delta\phi_c = 0.28$ ($\theta_c = 5.2^o$), which agrees well with the simulation value of 0.30 (5.4^o).

Denoting the phase of $s(t)$ in the frame rotating at the natural frequency by ψ, the synchronized solution in the mainlobe region ($|ap(\Delta\phi)| \geq |\nu|$) is given by

$$\psi(t) = \nu t + \chi, \tag{17}$$

where $\sin\chi = -\nu/ap(\Delta\phi)$. In the sidelobe region, an approximate solution for ψ can be written

$$\psi(t) \approx -\frac{ap(\Delta\phi)}{\nu} \cos(\nu t - \Gamma) + \frac{1}{2} \frac{a^2 p^2(\Delta\phi)}{\nu} t. \tag{18}$$

This is valid for $p(\Delta\phi) \ll 1$, which pertains past the first null of the linear beam pattern but is not applicable just past the synchronization transition. From the first term on the righthand side of Eq. (18), we see the origin of the sinusoidal variations of the phase in the bottom of Fig. 2(c) and the last term in Eq. (18) accounts for the small linear drift of the phase.

The above results can be more rigorously derived by a perturbation analysis using a form analogous to Eq.(7). The full solution will contain both phase and amplitude corrections. The phase, however, is the key factor for understanding the NOA beam pattern. The beam pattern is proportional to the power at the signal frequency

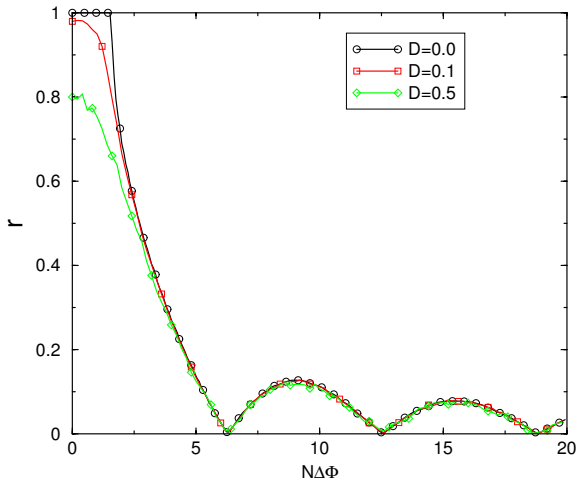

Figure 5. Response of NOA beamformer to three different noise levels for a 10 element array. $\kappa = 1$, $a = 1$, $\nu = 0.9$.

at a given angle of incidence, $|\hat{s}(\Omega_s, \Delta\phi)|^2$, where $\hat{s}$ is the Fourier transform of s. Neglecting the amplitude correction (u in Eq. (7)), we have $s \approx e^{i(\omega_0 t + \psi)}$. From Eq. (17), we then expect a constant power in the mainlobe region and the mainlobe of the NOA beamformer in Fig. 4 is indeed very flat. To capture its slight tilt requires including the amplitude correction and doing so we get for the beam pattern in the mainlobe:

$$|\hat{s}(\Omega_s, \Delta\phi)|^2 = 1 + \sqrt{a^2 p^2(\Delta\phi) - \nu^2}, \quad \Delta\phi \leq \Delta\phi_c. \tag{19}$$

Calculating $\hat{s}$ using Eq. (18) gives for the beam pattern in the sidelobe region (past the first null of $p(\Delta\phi)$):

$$|\hat{s}(\Omega_s, \Delta\phi)|^2 = \frac{a^2}{4\nu^2} p^2(\Delta\phi), \quad \Delta\phi >\approx \Delta\phi_c. \tag{20}$$

We have plotted the above two equations as the theoretical curve in Fig. 4 and very good agreement with the numerically simulated NOA beam pattern is observed except for the region immediately past the mainlobe for which Eq. (20) is not valid (an analytic expression which is valid for all incidence angles can be derived by a more sophisticated treatment than we have presented here[9]). It is important to note that, unlike the conventional beamformer, the NOA beam pattern depends on amplitude as shown in Eqs. (19) and (20). For small amplitudes below synchronization and sufficiently large amplitudes, the NOA beam pattern will look worse relative to the conventional beam pattern.

It is also possible to have alternative coupling topologies to the nearest-neighbor one discussed above. The case of global coupling, in which each oscillator is equally coupled to every other one (this is equivalent to feeding the mean of the oscillator outputs back to each oscillator), yields essentially the same beam pattern as the nearest-neighbor case. We have probed the response of the globally-coupled array to white gaussian noise. Specifically, we have added a noise term, $n_i(t)$, to each oscillator which has zero mean and is delta-correlated in time and between elements, $\langle n_i(t) \rangle = 0$, $\langle n_i(t) n_j(t') \rangle = 2D\delta(t - t')\delta_{ij}$. The use of global coupling enables a mean-field treatment that facilitates the theoretical analysis of the stochastic system. Theoretical analysis is further eased by the use of the phase equation approximation which essentially assumes that the variations in oscillator amplitudes can be neglected. Figure 5 shows the response of the phase-based simulation of the NOA beamformer to noise in which the response is defined as the level of synchronization, $r = |(1/N) \sum e^{i\phi_i}|$, which is essentially the magnitude of the output s above. We observe that the NOA beamformer continues to show a narrow mainlobe and lowered sidelobes although the mainlobe response degrades with noise as expected. Good agreement with theory based on a Fokker-Planck analysis has been obtained.[9]

5. CONCLUSION

In this paper, we have presented a beamforming concept based on the nonlinear dynamical phenomenon of synchronization. Numerical and theoretical results show that the NOA beamformer can exhibit both a narrower

mainlobe and lower sidelobes relative to the equivalent conventional beam pattern. This suggests that the NOA beamformer may have improved resolution and less susceptibility to interference. However, the presence of nonlinearity considerably complicates the analysis of the NOA beamformer response as the signal parameters are varied, noise is added, or multiple signals are present simultaneously. For an array with fixed parameters, any performance improvements would only be present over a limited regime in the signal, noise, and interference parameter space. To cover a larger space, multiple arrays would be needed or the array parameters such as coupling would have to be adaptively tuned. This could add much complexity to the design, although such complexity is characteristic of biological signal processing systems. Further analysis of the array response to a richer input environment is in progress which will more fully address the NOA beamformer performance.

6. ACKNOWLEDGMENT

We gratefully acknowledge the support of SPAWAR Systems Center San Diego and the Defense Advanced Research Projects Agency.

REFERENCES

1. A. Pikovsky, M. Rosenblum, and J. Kurths, *Synchronization: A Universal Concept in Nonlinear Science*, University Press, Cambridge, 2001.
2. S. Lee, S. Tanaka, and S. Kim, "Orientation tuning and synchronization in the hypercolumn model," *Physical Review E* **69**, p. 011914(11), 2004.
3. A. Kern and R. Stoop, "Essential role of couplings between hearing nonlinearities," *Physical Review Letters* **91**, p. 128101(4), 2003.
4. M. Gabbay, "Narrowband Beamformer Using Nonlinear Oscillators." US Patent No. 20020159335, October 31, 2002.
5. B. Meadows, T. Heath, J. Neff, E. Brown, D. Fogliatti, M. Gabbay, V. In, P. Hasler, S. Deweerth, and W. Ditto, "Nonlinear antenna technology," *Proceedings of the IEEE* **90**(4), pp. 882–897, 2002.
6. P. Liao and R. York, "A new phase-shifterless beam-scanning technique using arrays of coupled oscillators," *IEEE Trans. Microwave Theory Tech.* **41**, pp. 1810–1815, 1993.
7. P. Liao and R. York, "A six-element scanning oscillator array," *IEEE Microwave Guided Wave Lett.* **4**(1), pp. 20–22, 1994.
8. G. Osipov and M. Suschik, "Synchronized clusters and multistability in arrays of oscillators with different natural frequencies," *Phys. Rev. E* **58**, pp. 7198–7207, 1998.
9. M. Gabbay, M. Larsen, and L. S. Tsimring, "Globally coupled noisy oscillators with inhomogeneous periodic forcing," (submitted).