System-on-Chip Class: In-Class Tutorial

Spring 2026

SystemC-TLM/RTL

Goal: learn, understand and communicate.

Objective:

To understand the fundamentals of SystemC Transaction-Level Modeling (TLM-2.0) and RTL. We will model a data-driven system focusing on communication interfaces rather than pin-level signal toggling.

In this work, we are required to install SystemC in our system. There are two parts to the project.

Instructions:

We must use SystemC-TLM or RTL constructs.

Part A: Basic Producer-Consumer via Blocking TLM or RTL equivalent

In this phase, you will build a point-to-point communication link between a Traffic Generator and a Memory Sink.

- Components:

1. The Producer (TPG - Test Pattern Generator)

- Function: Generate a synthetic image pattern (e.g., a color gradient or checkerboard) at a resolution of 780x610.
- Requirement: The producer must act as a TLM Initiator. It should encapsulate pixel data into **tlm_generic_payload** and send it via **tlm_blocking_put_if** or a simple **b_transport** call.

2. The Consumer (Memory/Display)

- Function: TLM Target. It must allocate a memory buffer to store the incoming pixels.
- Requirement: Upon receiving the full frame, the consumer should export the data to a standard format (like a .ppm or .bmp file) to verify visual correctness.

- **Architecture:**

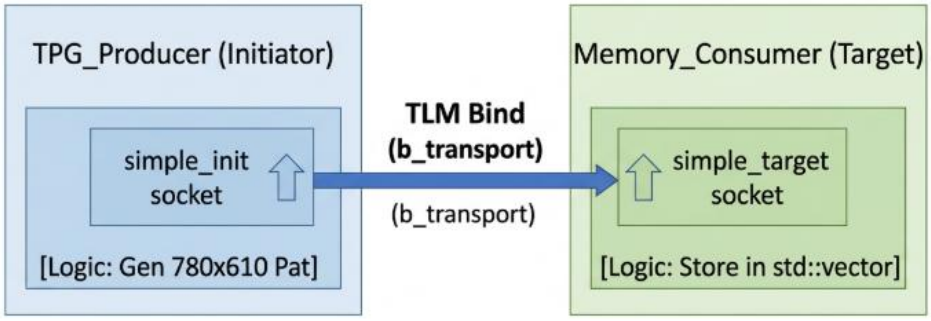

Figure 1. TPG-memory Architecture.

Part B: Router Architecture

In this phase, you will introduce an interconnect and basic timing annotation to observe how "bus" contention affects throughput.

- Components:

1. The Interconnect (Router/Bus)

- Implement a simple **TLM Router** that sits between the Producer and Consumer.
- The Router should decode addresses to direct traffic to the Memory.

2. Timing Annotation

- Instead of untimed modeling, you must use sc_time to model delays.
- **Task:** Add a 10ns delay for every transaction at the Router and a 50ns write latency at the Memory. Calculate the total simulated time required to transfer one full frame (780 x 610 pixels).

- **Architecture:**

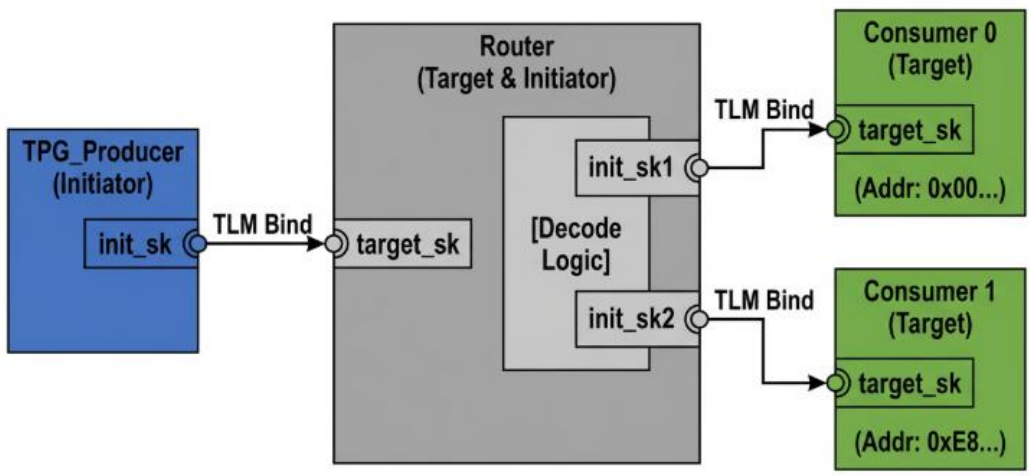

Figure 2. TPG-memory over router

Technical Requirements

- Data Width: 32-bit (mapping RGB pixels).
- Interface: TLM-2.0 Base Protocol (Generic Payload).
- Tools: SystemC 2.3.x library, C++17, and a standard compiler (GCC/Clang).