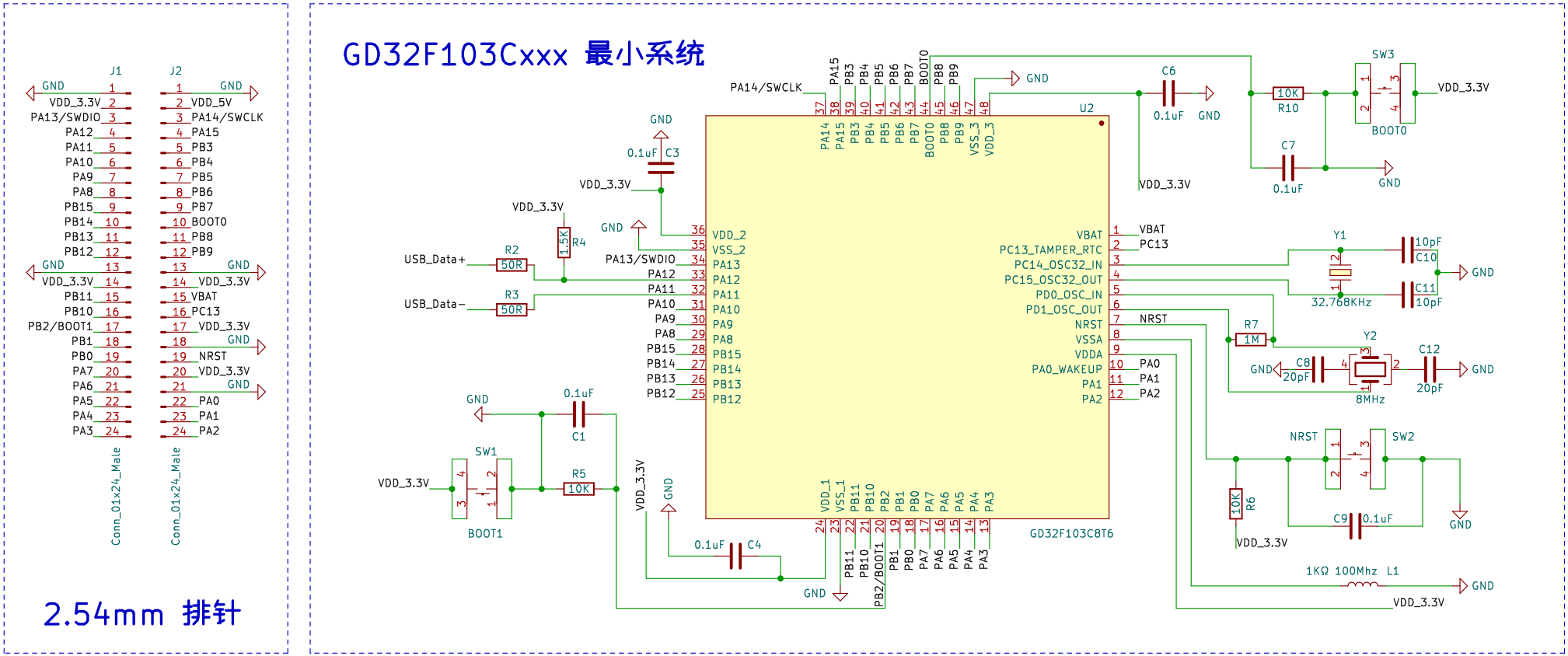

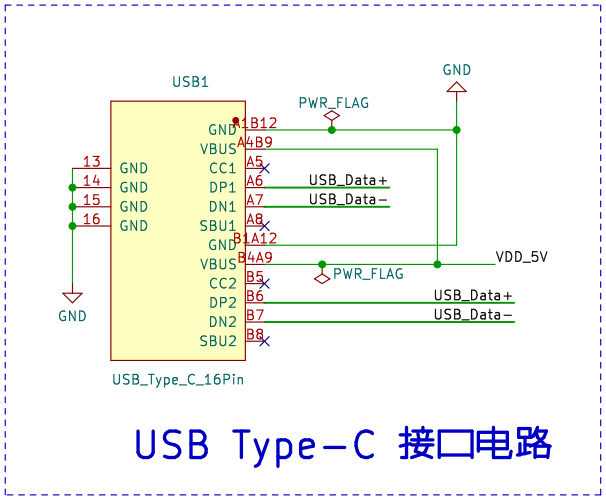

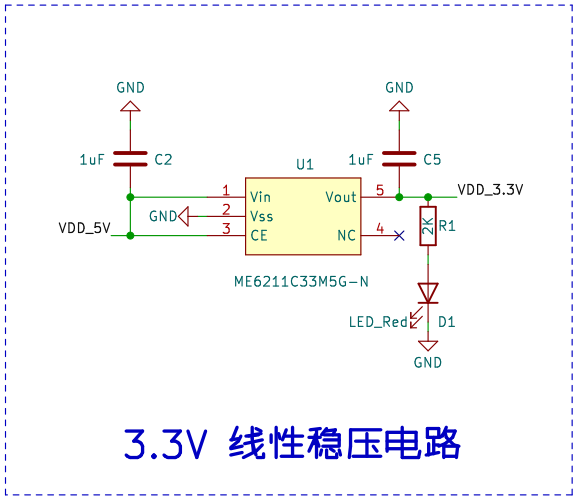

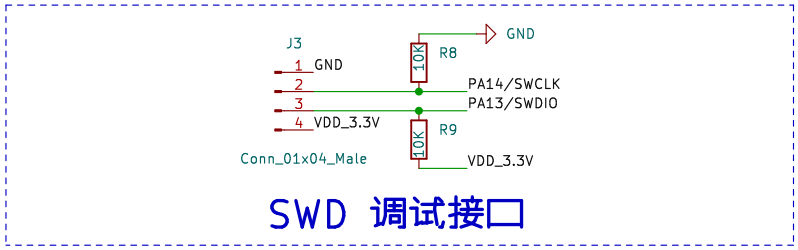

电子技术博客 UinIO.com

Sheet: /

File: UINIO−MCU−GD32F103C.kicad_sch

Title: UINIO−MCU−GD32F103C

Size: A4	Date: 2023−01−29	Rev: Version 1.0.0
KiCad E.D.A. kicad (6.0.11)		Id: 1/1