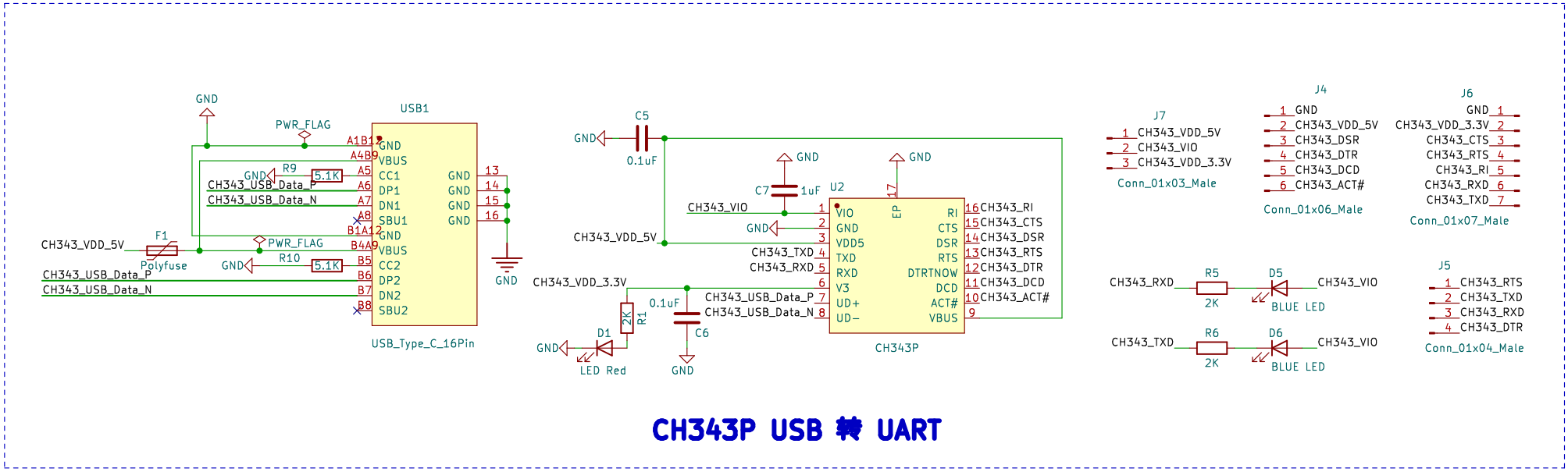

CH343P USB 转 UART

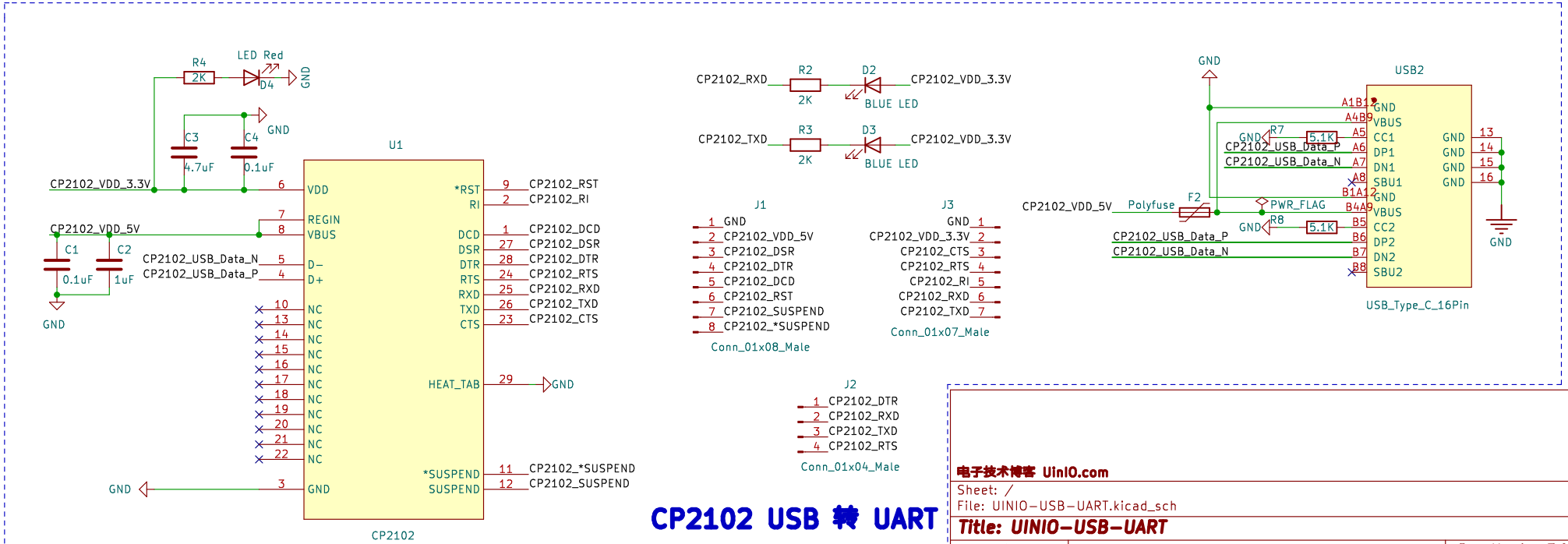

CP2102 USB 转 UART

电子技术博客 UinIO.com

Sheet: /

File: UINIO-USB-UART.kicad_sch

Title: UINIO-USB-UART

Size: A4	Date: 2023-02-07	Rev: Version 3.0.0
KiCad E.D.A. kicad (6.0.11)		Id: 1/1