An Introduction to SystemVerilog

Nebhrajani A.V.

June 6, 2023

Why SystemVerilog?

- Modern computers are typically implemented using digital electronic circuits.
- Implementing the microarchitecture of a computer requires a *description language* for digital electronic circuits.
- Common hardware description languages (HDLs) are: Verilog, SystemVerilog, VHDL.

Levels of Abstraction

- How can we describe a digital circuit? In terms of:
  - Individual transistors.
  - Individual gates.
  - ...?
  - Architectures/algorithms (think Tomasulo's)
- Problem: gates/transistors are too low level, algorithms are too high level to "synthesize" into circuits.

Enter Register Transfer Level

- RTL models digital circuits at the level of registers, and the flow of data (signals) between them.
- Informally, an RTL circuit is typically described as a system made of two kinds of components:
  - Registers (D flip-flops)
  - Combinational logic
- The combinational logic connects registers together, doing binary operations on the signals flowing through it.

RTL Circuit

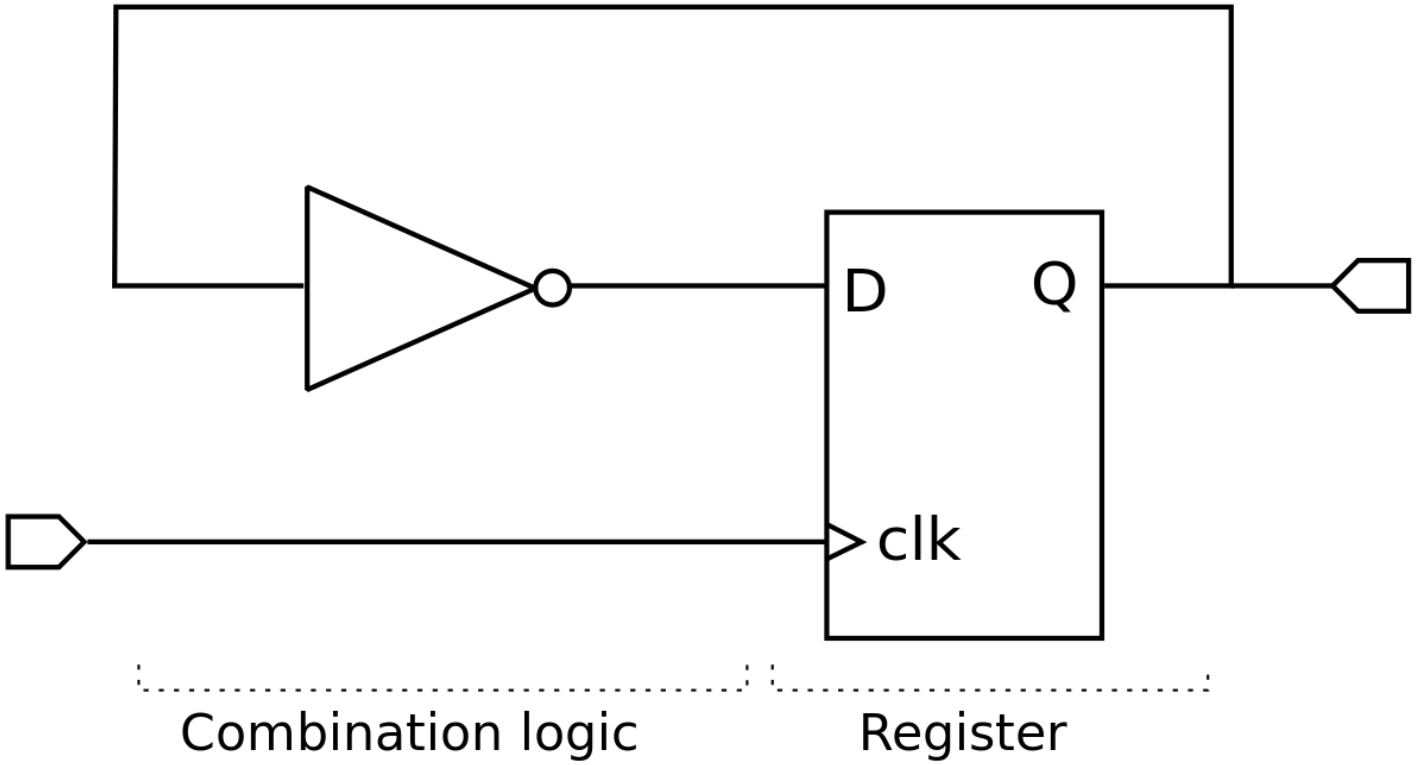

Alinja at the English Wikipedia, CC BY-SA 3.0 http://creativecommons.org/licenses/by-sa/3.0/, via Wikimedia Commons

Back to SystemVerilog

- SystemVerilog can be used for RTL design (that gets *synthesized* into (a netlist of) gates).
- It can also be used for gate-level and "switch-level"[1] modeling.
- SystemVerilog is also used for *verifying* that the described circuit works as intended by *simulating* its operation.
- ...so it's a complicated language with many features.

[1] An abstraction layer in between gates and analog transistors.

History Lesson

- Verilog (portmanteau of **veri**fication and **log**ic) was invented in the early 80s, through an acquisition became Cadence's IP, then was made into an open standard (IEEE 1364-1995).
- Updated to IEEE 1364-2001, then IEEE 1364-2005.
- Meanwhile, Accelera was working on a superset of Verilog: SystemVerilog. Languages were merged in IEEE 1800-2009.
- Updated to IEEE 1800-2012, then IEEE 1800-2017 (current).

How is it used?

- SystemVerilog is widely used for verification. UVM (an open source class library) is also used for verification.
- Synthesizable RTL is often still pure Verilog, since toolchains are slow to support new features, and correctness over novelty is important.

Simulation

- In an ASIC context, taping out a chip is expensive. Before taping out a design, it's important to make sure it'll work as expected.
- A simulator is a software tool that "runs" your design as a software simulation, before it's in actual hardware.

HDLs are not programming languages

- SystemVerilog looks a lot like C or C++. This is deceiving, since the languages are very different.
- HDLs are modeling languages, as such, they include an explicit notion of time, with multiple events logically happening simultaneously.
- Simulators use queue-based timekeeping algorithms to track the state of various parts of the design as it moves forward through simulation time.
- A graphical view of this is called a "waveform", a graph of signal values with respect to time.

Small Waveform

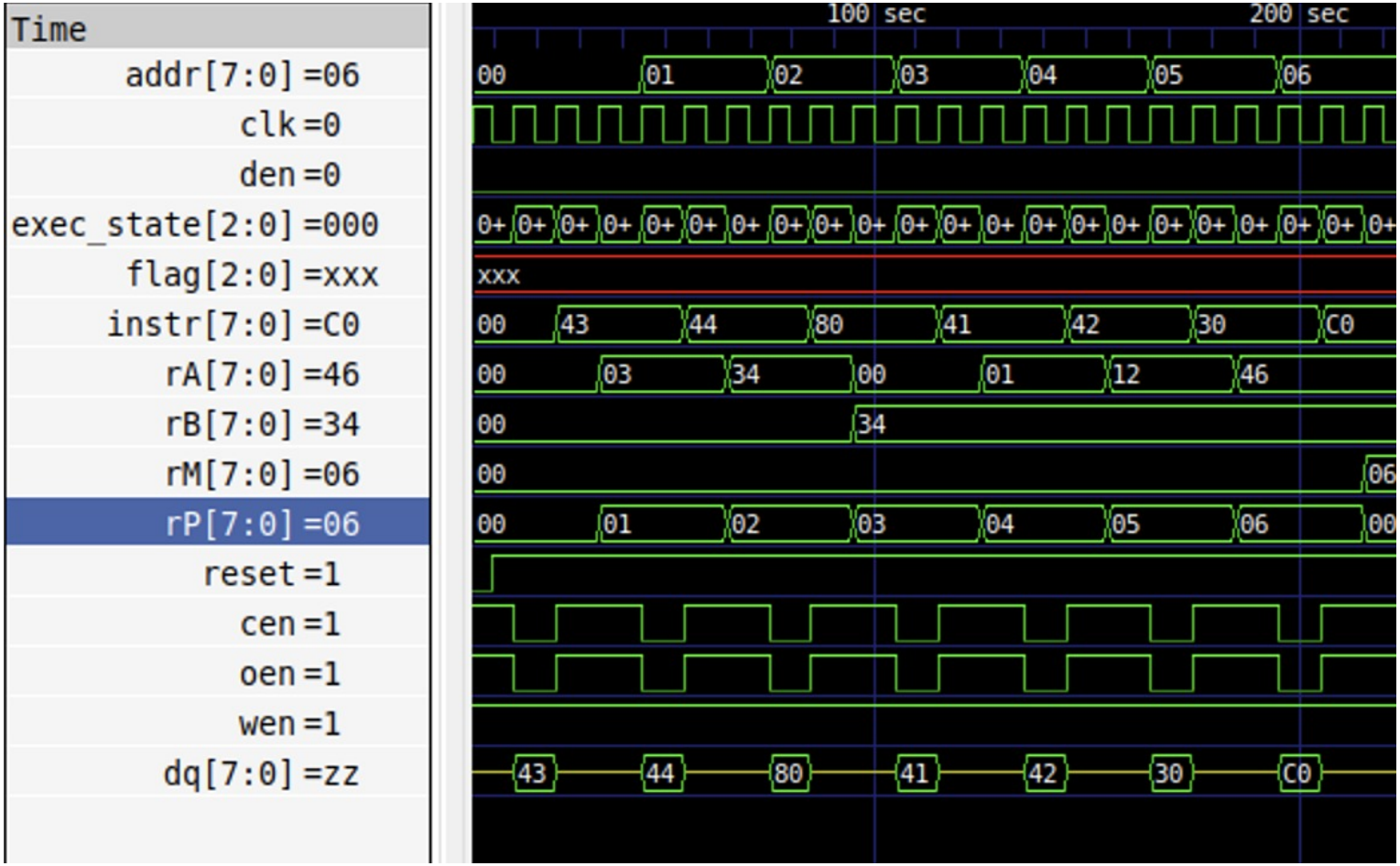

Ugly Waveform — Hence Verification

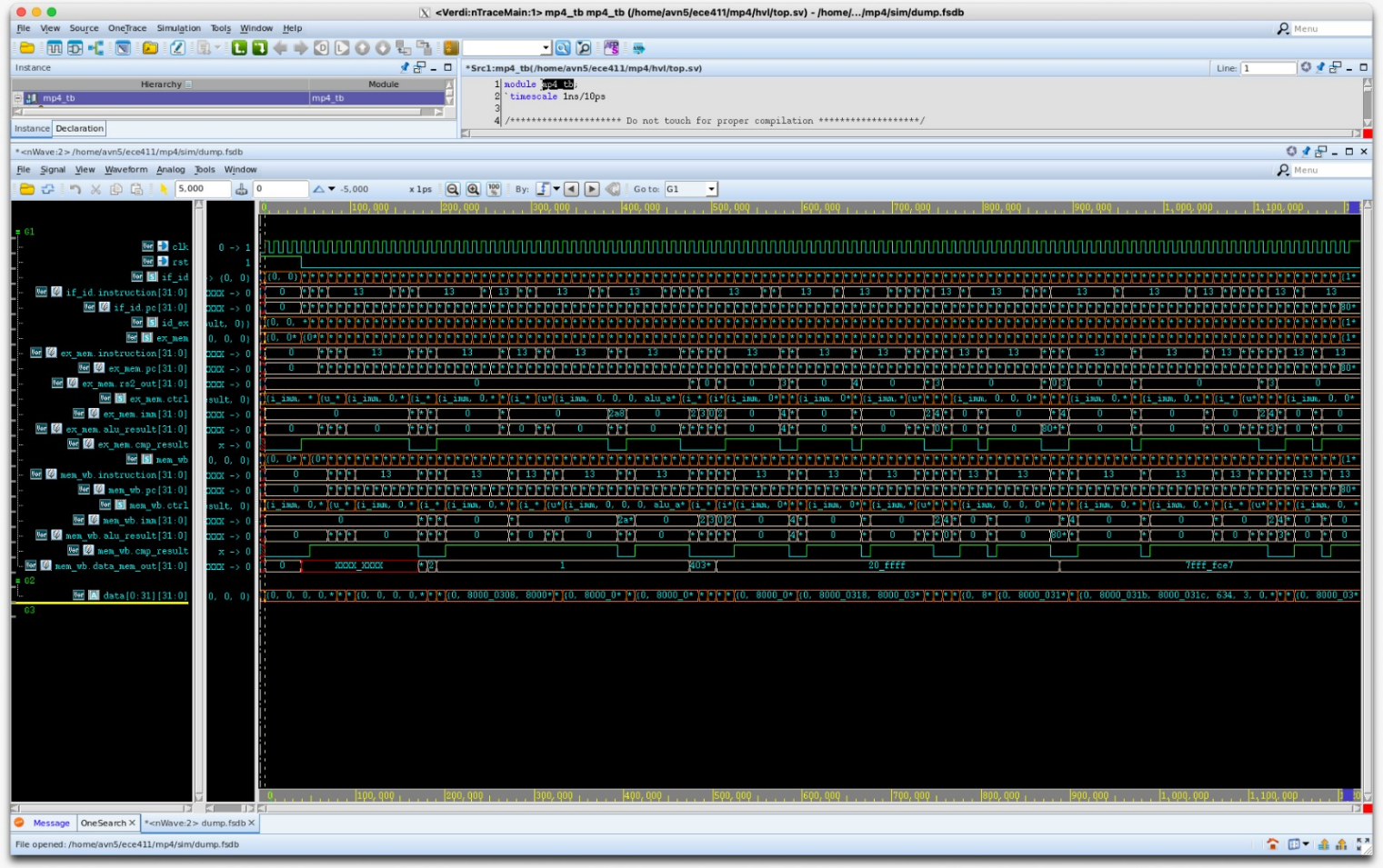

Commercial Tooling: The Big Three

- The "big 3" simulators are:
  - Synopsys VCS
  - Cadence Incisive/NC-Verilog/Xcelium
  - ModelSim/Questa
- Open source simulators:
  - Icarus Verilog (`iverilog`)
  - Verilator
- Synthesis tools vary by technology.
- Site for trying tooling: `https://www.edaplayground.com/`.

Let's wrap it up

- Truly learning computer architecture will eventually mean implementing digital electronic circuits in an HDL.
- SystemVerilog is the HDL of choice at SIGARCH and UIUC ECE.
- SystemVerilog can be used for both design and verification.
- There are a huge variety of language constructs, tools, methodologies, design patterns, etc. in RTL design and verification: it's a broad and difficult field.
- It's also extremely rewarding and fun!

Oh, and that other HDL...

- VHDL – VHSIC (Very High Speed Integrated Circuits) Hardware Description Language.
  - Doesn't stand for Verilog HDL.
- Anecdotally, VHDL is used more in military, space, and Europe, whereas Verilog is used more in private companies and the US.
- For a more in-depth comparison, see: `https://trilobyte.com/pdf/golson_clark_snug16.pdf`.