Analog Matrix Computations

@crawfish

Outline

Background

Solving Matrix Equations in One Step

Analog Computing for DNN Evaluation

Section 1

Background

Ohm's Law

$$V = IR$$

Kirchoff's Voltage Law

For any closed loop in a circuit, the sum of the voltage differences across all components is 0.

$$\sum V_i = 0$$

ReRAM

- Resistive Random Access Memory
  - aka memristors
- Class of nonvolatile memory based on resistance switching
- When a voltage is applied, resistance of device determines current flow to be sensed

Flash Storage

- Charge storage based memory
- Classified as NOR flash or NAND flash based on organization of cells
  - NOR flash has faster reads, NAND flash has faster writes
  - Density of NAND flash cells is better
- Inherently analog cells (optimized for digital storage)
  - Value read is dependent on number of electrons 'stuck' in control gate
  - This affects the threshold voltage required to read

NAND vs. NOR Flash

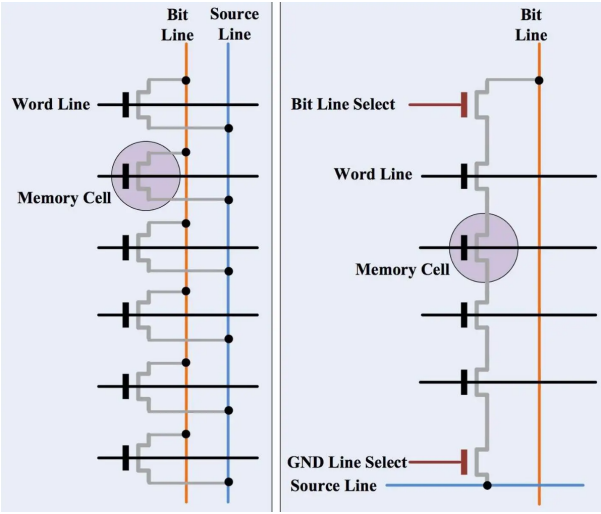

NAND vs. NOR Flash

Feature	NOR Flash		NAND Flash	
	General	S70GL02GT	General	S34ML04G2
Capacity	8MB – 256MB	256MB	256MB – 2GB	256MB
Cost per bit	Higher	6.57×10^{-9} USD/bit for 1ku	Lower	2.533×10^{-9} USD/bit for 1ku
Random Read speed	Faster	120ns	Slower	30µS
Write speed	Slower		Faster	
Erase speed	Slower	520ms	Faster	3.5ms
Power on current	Higher	160mA (max)	Lower	50mA (max)
Standby current	Lower	200µA (max)	Higher	1mA (max)
Bit-flipping	Less common		More common	
Bad blocks while shipping	0%		Up to 2%	
Bad block development	Less frequent		More frequent	
Bad block handling	Not mandatory		Mandatory	
Data Retention	Very high	20 years for 1K program-erase cycles	Lower	10 years (typ)
Program-erase cycles	Lower	100,000	Higher	100,000
Preferred Application	Code storage & execution		Data storage	

Section 2

Solving Matrix Equations in One Step

Solving matrix equations in one step with cross-point resistive arrays

Zhong Suna, Giacomo Pedrettia, Elia Ambrosia, Alessandro Bricallia, Wei Wanga, and Daniele Ielminia

Cross-Point Array

- Cross-point array of RRAM devices is fundamental building block of operations
  - RRAM elements located at cross point positions between rows and columns
- Solve system of linear equations in one using analog computation in storage

Systems of Equations

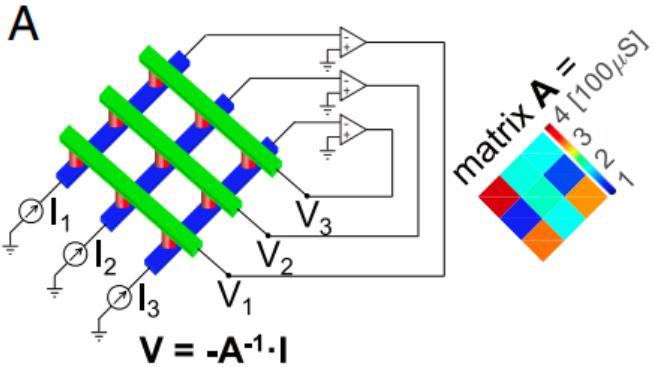

Systems of Equations

$$Ax = b$$

Systems of Equations

$$Ax = b$$

1. Map values in A to the conductance of RRAM devices
2. Force current $I = -b$ and measure the resulting V
   - 2.1 $V = -I/G$
   - 2.2 $A \cdot V + I = 0$ by KVL
   - 2.3 $V = -A^{-1} \cdot I = x$

Systems of Equations

$$Ax = b$$

1. Map values in A to the conductance of RRAM devices
2. Force current $I = -b$ and measure the resulting V
   2.1 $V = -I/G$
   2.2 $A \cdot V + I = 0$ by KVL
   2.3 $V = -A^{-1} \cdot I = x$

Perform MVM in $O(1)$ time! (instead of $O(nm)$)

Matrix Inversion

$$A \cdot A^{-1} = U$$

Matrix Inversion

$$A \cdot A^{-1} = U$$

1. Map values in A to the conductance of RRAM devices
2. Force current $I_i = -U_i$ for every column $U_i \in U$ and measure output V
   2.1 $A_i \cdot V + I_i = 0$
   2.2 $V = -A_i^{-1} \cdot I_i = A_i^{-1}$

Matrix Inversion

$$A \cdot A^{-1} = U$$

1. Map values in A to the conductance of RRAM devices
2. Force current $I_i = -U_i$ for every column $U_i \in U$ and measure output V
   2.1 $A_i \cdot V + I_i = 0$
   2.2 $V = -A_i^{-1} \cdot I_i = A_i^{-1}$

Invert a matrix in $O(n)$ time! (instead of $O(n^3)$)

Eigenvectors

$$Ax = \lambda x$$

1. Map values in A to the conductance of RRAM devices
2. Self-operated feedback circuit
   2.1 Voltage V generates a current vector $I = A \cdot V$
   2.2 Output currents are converted into voltages + inverted
   2.3 Resulting voltage vector V' is re-fed into cross-point columns
3. Apply KVL + Ohm's law...
   3.1 $-A \cdot V / G_\lambda = -V$
   3.2 $A \cdot V = G_\lambda \cdot V$

Eigenvector Circuit

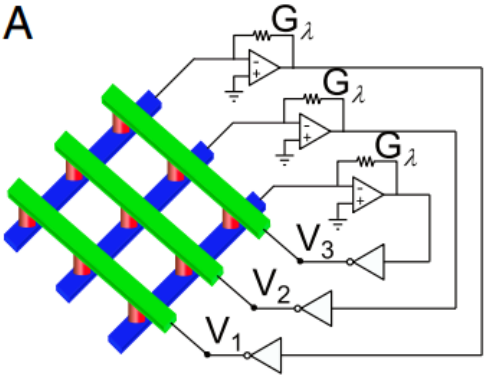

$$\mathbf{A}\cdot\mathbf{V} = G_\lambda \mathbf{V},\ \lambda > 0$$

Negative Coefficients

$$\begin{bmatrix} -1 & -2 \\ -3 & -4 \end{bmatrix} \begin{bmatrix} a \\ b \end{bmatrix} = \begin{bmatrix} -3 \\ -7 \end{bmatrix}$$

Negative Coefficients

$$\begin{bmatrix} -1 & -2 \\ -3 & -4 \end{bmatrix} \begin{bmatrix} 1 \\ 1 \end{bmatrix} = \begin{bmatrix} -3 \\ -7 \end{bmatrix}$$

Negative Coeffecients

- Conductance is always positive
  - Since we are mapping the values of A to conducting elements, this constrains the sign of A

Negative Coeffecients

- Conductance is always positive
  - Since we are mapping the values of A to conducting elements, this constrains the sign of A
- **Solution:** Differential pairs

Negative Coeffecients

- Conductance is always positive
  - Since we are mapping the values of A to conducting elements, this constrains the sign of A
- **Solution:** Differential pairs
  1. Set $A = B - C$ and $I = I_B + I_C$
  2. $A \cdot V + I = B \cdot V + C(-V) + I = 0$

Differential Pairs

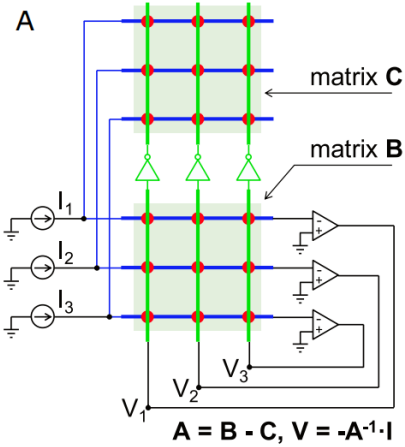

Accuracy

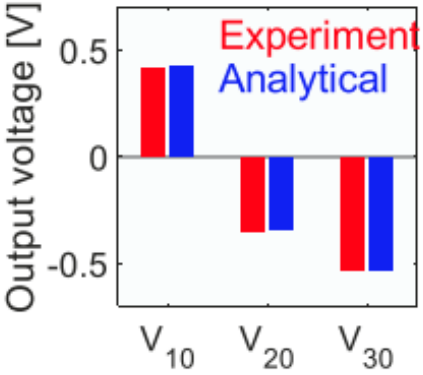

Section 3

Analog Computing for DNN Evaluation

DNNs (Deep Neural Networks)

- DNNs are an ideal use case for analog matrix computations

DNNs (Deep Neural Networks)

- DNNs are an ideal use case for analog matrix computations
  - Lots of matrix operations
  - Noise insensitive
  - Bottlenecked by data movement

DNNs (Deep Neural Networks)

- DNNs are an ideal use case for analog matrix computations
  - Lots of matrix operations
  - Noise insensitive
  - Bottlenecked by data movement
- Prior work has explored digital in-memory computation to accelerate DNN training + inference
  - Un-ideal, many operations required to make this work (slower, bigger, more complex)

DNNs (Deep Neural Networks)

- DNNs are an ideal use case for analog matrix computations
  - Lots of matrix operations
  - Noise insensitive
  - Bottlenecked by data movement
- Prior work has explored digital in-memory computation to accelerate DNN training + inference
  - Un-ideal, many operations required to make this work (slower, bigger, more complex)
- **Strategy:** Map fundamental operations of DNN to circuits

NOR Flash for DNN Evaluation

- NFCAs (NOR Flash Computing Arrays) can be used to implement analog DNNs
- Utilize NOR flash in analog mode to produce results similar to ReRAM

NOR Flash for DNN Evaluation

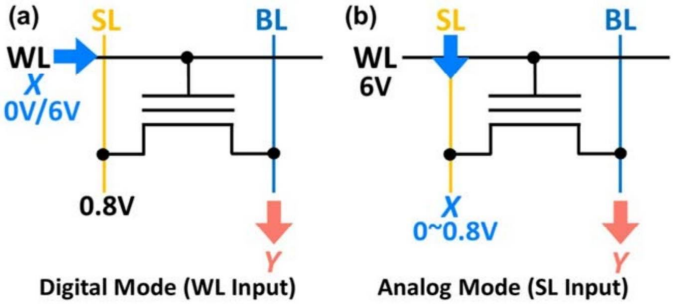

NOR Flash for DNN Evaluation

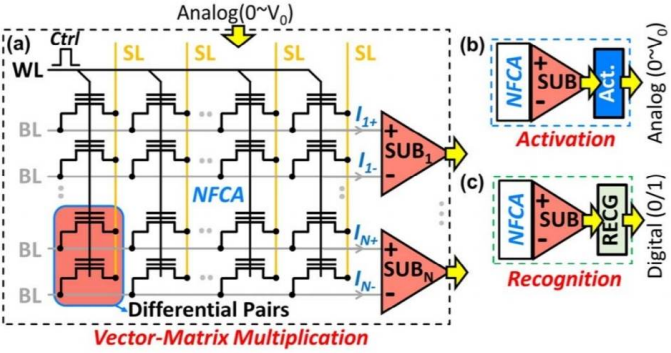

MNIST

Modified National Institute of Standards and Technology database

MNIST

Modified National Institute of Standards and Technology database

- Large database of handwritten numbers commonly used as a benchmark for AI models
- NFCA based DNN is a good representation of most important functionality
  - $2x$ convolution layers, $2x$ pooling layers, $1x$ fully connected layer
  - Training performed on a traditional CPU (HW only responsible for inference)

5-Layer NFCA based DNN (in NOR flash)

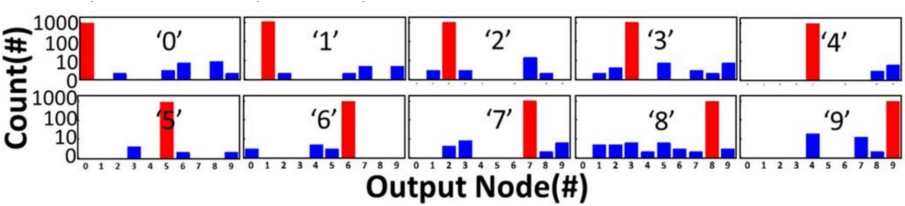

Performance

TABLE I. COMPARISON OF THE ANALOG COMPUTING WITH PREVIOUS DIGITAL COMPUTING

	Analog	**Digital**
Technology (nm)	65 nm	65 nm
Frequency (MHz)	104	104
Input	BL (analog/binary)	WL (only binary)
Memory Access (Mb)	4.3	4.38
Accuracy/MNIST (%)	97.1	97.8
Array Size (Mb)	1.07	5.87
Gate Counts (kgates)	4.1	548.2
Area (mm^2)	0.048	0.353
Time/Image (s)	3×10^{-7}	2.38×10^{-6}
Energy/Image [Linear-4] (J)	1.97×10^{-8}	2.42×10^{-6}

Future Research

- Huge potential for use in edge devices
  - Reducing data movement slashes power usage
- Hardware is still in proof-of-concept phase
  - ex. DNN was 5-layer
  - Big DNNs have large numbers of hidden layers (1000+)
- Accuracy
  - 5-layer network showed performance degradation at low voltages
  - Error can be magnified over more operations

The end.