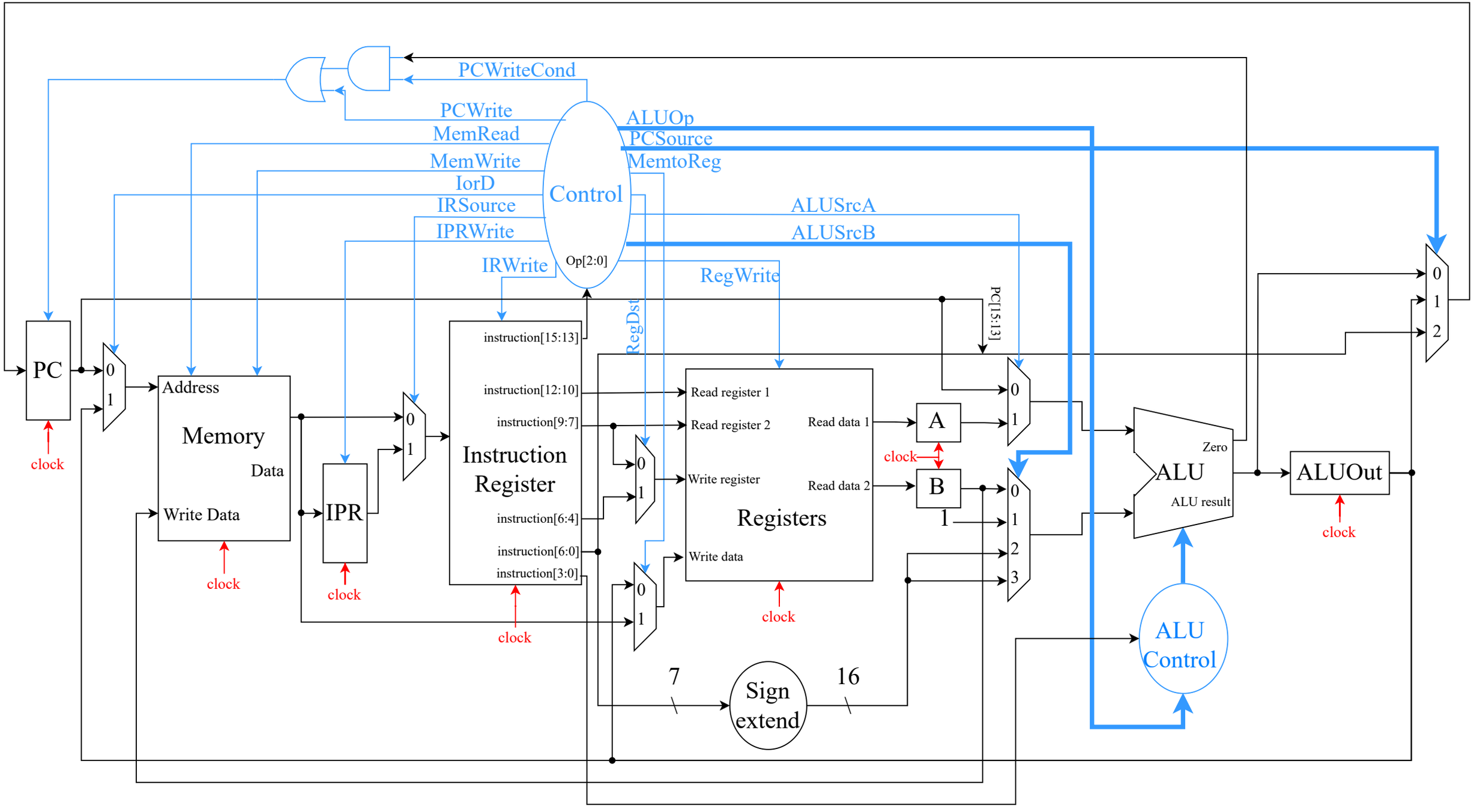
PCWriteCond
PCWrite
MemRead
MemWrite
IorD
IRSource
IPRWrite
IRWrite
Control
Op[2:0]
ALUOp
PCSource
MemtoReg
ALUSrcA
ALUSrcB
RegWrite
RegDst
PC[15:13]
PC
clock
Address
Memory
Data
Write Data
IPR
instruction[15:13]
instruction[12:10]
instruction[9:7]
Instruction
Register
instruction[6:4]
instruction[6:0]
instruction[3:0]
Read register 1
Read register 2
Write register
Write data
Read data 1
Read data 2
Registers
A
B
1
Zero
ALU
ALU result
ALUOut
ALU
Control
7
Sign
extend
16