	UNIVERSITÁ DEGLI STUDI DI ROMA TORVERGATA **LARM2: Laboratory of Robot Mechatronics** https://larm2.ing.uniroma2.it/	

Tutorial of FMS
FUNDAMENTALS OF MECHNICS OF SYSTEMS

Report of
Mechanism simulation using Inventor simulator

Supervisor:
Prof. Marco Ceccarelli
Co-supervisor:
Mr. Luca Quattrucci
Prof. Matteo Russo

Candidate:
Aditya Ujjwal
Matricola:
0342690

December, 2025

ABSTRACT

This report presents the complete modelling, assembly and dynamic simulation of a classical Scotch-Yoke mechanism using Autodesk Inventor Professional. The study focuses on both kinematic and dynamic aspects of the mechanism by prescribing different input velocity profiles and analysing the resulting displacement, velocity, acceleration, reaction forces, and driving torque requirements. Numerical data exported from Inventor are post-processed using MATLAB to evaluate the influence of external loading conditions and to compare the unloaded and loaded operational behaviours. The work demonstrates the effective integration of virtual prototyping, CAD-based dynamic simulation, and computational post-processing for the rigorous analysis of planar mechanisms. The results highlight how imposed kinematic inputs interact with internal joint constraints and external forces, and they provide engineering-relevant insights into force transmission efficiency and motor effort under constant rotational velocity conditions.

Keywords: Scotch-Yoke mechanism, Dynamic Simulation, Autodesk Inventor, Kinematics, Reaction Forces, Driving Torque, CAD-based Analysis.

TABLE OF CONTENTS

1. Introduction 3

2. Main characteristics and operating principles of Autodesk Inventor 4
2.1 Parametric Part Modelling
2.2 Assembly Modelling and Joint Definition
2.3 Dynamic Simulation Environment
2.4 Suitability of Inventor for Mechanism Analysis

3. Analyzed mechanism: structure and modelling 6
3.1 Structural Composition of Components
3.2 Assembly of the Mechanism
3.3 Kinematic Modelling and DOF Verification
3.4 Dynamic Modelling Framework

4. Simulated Operation 10
4.1 Imposed Velocity and simulation Workflow
4.2 Load and No-Load Case Study Definition

5. Results and Discussion 12
5.1 Kinematic Results: Position, Velocity, and Acceleration
5.1.1 Theoretical Kinematic Framework
5.1.2 Inventor Simulation Output
5.1.3 Why Kinematics Remain Identical Under Load
5.2 Dynamic Quantities: Reaction Forces and Driving Torque
5.2.1 Reaction Force Definitions
5.2.2 Driving Torque Definition
5.2.3 Physical Meaning of Driving Torque
5.3 Torque Analysis: Loaded vs Unloaded Conditions
5.3.1 Unloaded Torque Behaviour
5.3.2 Loaded Torque Behaviour
5.3.3 Differential Torque ΔT Analysis
5.4 Engineering Interpretation of the Results
5.4.1 Torque as a Load Indicator
5.4.2 Practical Engineering Relevance

6. Conclusion 19

7. References 20

1. INTRODUCTION

Computer-aided design (CAD) and multibody-dynamics (MBD) simulation environments have become essential tools for the virtual prototyping, verification, and optimization of mechanical mechanisms. **Autodesk Inventor** provides a fully integrated platform that combines *parametric part modelling, assembly* with *constraint definitions, kinematic design*, and *dynamic simulation*. This allows both geometric feasibility and dynamic response to be evaluated within a unified software environment, making it highly suitable for educational as well as engineering design applications.

In this project, a classical **Scotch–Yoke mechanism** is modelled, assembled, and dynamically simulated using Autodesk Inventor 2024. The Scotch–Yoke is a **single-degree-of-freedom** mechanism that converts *uniform rotary motion* into *exact sinusoidal linear oscillation* through the geometric constraint imposed by a slotted yoke engaged with a rotating crank pin. Owing to its precision and simplicity, it finds use in positive-displacement pumps, specialized actuators, and indexing systems.

The work follows a structured workflow comprising the modelling of individual components, definition of kinematic and dynamic constraints, and execution of a dynamic simulation under prescribed rotational velocities. **Two operating scenarios are analysed—unloaded and externally loaded—to quantify how an applied resisting force influences internal reactions and the required driving torque.** Numerical data exported from Inventor's Dynamic Simulation module are post-processed in MATLAB to evaluate displacement, velocity, acceleration, reaction forces, and motor effort throughout the motion cycle.

The study highlights the sensitivity of dynamic behaviour to external loading while confirming the geometric invariance of the kinematics under imposed constant angular velocity. The integrated Inventor–MATLAB workflow provides a rigorous and accessible approach for students and engineers to explore the behaviour of constrained-motion mechanisms and to interpret force and torque transmission characteristics under realistic working conditions.

2. MAIN CHARACTERISTICS AND OPERATING PRINCIPLES OF AUTODESK INVENTOR

Autodesk Inventor is a parametric, feature-based CAD/CAE environment designed for the modeling, assembly, and analysis of mechanical systems. Its integrated **Dynamic Simulation** module provides a multibody environment in which kinematic and dynamic behavior can be evaluated without the need for external solvers. This section summarizes the key capabilities relevant to the modeling and simulation of the **Scotch-Yoke mechanism** analyzed in this work.

2.1 Parametric Part Modeling

Inventor employs a constraint-driven geometric engine that allows parts to be constructed using sketches, dimensions, and features. Parametric definition ensures that geometric changes propagate throughout the model, enabling controlled modification of link lengths, slider dimensions, or joint locations. This parametric structure is particularly advantageous for mechanism design, where the mobility and transmission characteristics depend sensitively on geometric relationships. Typical operations include:

- Sketch creation using *lines, arcs, splines,* and *constraints;*
- Feature generation via *extrusion, revolution, cut*, or *sweep;*
- Dimensional parametrization for controlled variation.

2.2 Assembly Modeling and Joint Definition

The assembly module enables the hierarchical combination of components through geometric mates and specialized **joints** that define admissible motions. For mechanical systems, Inventor supports joints such as:

- **Revolute**, permitting relative rotation about a single axis;
- **Prismatic**, allowing translation along a defined axis;
- **Cylindrical, spherical, planar**, and other multi-DOF constraints.

Joint selection and orientation determine the mechanism's **degree of freedom (DOF)** and must satisfy the mobility requirements derived from *Grübler–Kutzbach criteria*. Once assembled, the mechanism can be transitioned directly to the Dynamic Simulation environment.

2.3 Dynamic Simulation Environment

The Dynamic Simulation module implements a Newton–Euler multibody solver capable of evaluating both **kinematics**(position, velocity, acceleration) and **dynamics** (forces, moments, reaction loads) over time. Its principal features include:

a) Imposed Motion Inputs

The user may prescribe:

- Angular velocity, angular acceleration, or position profiles on revolute joints;
- Linear displacement, velocity, or acceleration on prismatic joints.

The motion may follow constant, sinusoidal, trapezoidal, polynomial, or user-defined spline laws. This enables controlled testing of different motor-like inputs.

b) Force and Load Application

External forces, torques, gravity, and contact interactions can be included. This allows comparison between **unloaded** and **loaded** operational conditions, as required in this study.

c) Reaction and Internal Force Computation

For each joint, Inventor computes:

- Reaction forces and moments;
- Driving torque required to satisfy an imposed motion;
- Resultant force transmission to sliders or links.

These outputs are essential for evaluating design performance under varying loads.

d) Output Grapher and Data Export

Simulation results can be visualized through Inventor's Output Grapher, which provides time-dependent plots of any kinematic or dynamic variable. Crucially, all plotted quantities can be exported into spreadsheet files compatible with MATLAB for post-processing. This enables numerical computation of performance metrics, comparison across simulations, and validation of the mechanism's response.

2.4 Suitability of Inventor for Mechanism Analysis

Autodesk Inventor provides an integrated environment well suited for this project, combining parametric part design, explicit DOF and constraint definition, and a multibody dynamic simulation module. The software allows the application of realistic loads, computes the driving torque associated with imposed motions, and enables the export of numerical data for external analysis.
Thus, Inventor serves effectively as both a CAD platform and an educational multibody simulator for evaluating mechanism performance prior to more advanced modelling in MATLAB/Simulink.

3. ANALYZED MECHANISM: STRUCTURE AND MODELLING

The mechanism investigated in this study is a **Scotch Yoke mechanism**, a classical single-degree-of-freedom system employed for converting **uniform rotary motion** into **pure sinusoidal reciprocating translation**. It consists of a crank rotating about a fixed revolute joint, connected to a slider via a yoke containing a slotted guide. The pin on the crank engages with the slot, enforcing a geometric constraint that generates an exact sinusoidal displacement of the slider.

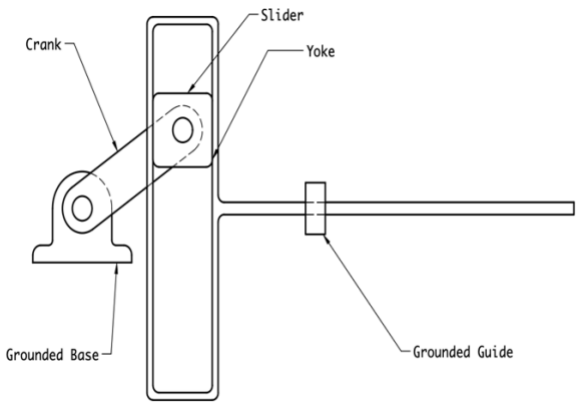

Figure 1(a)

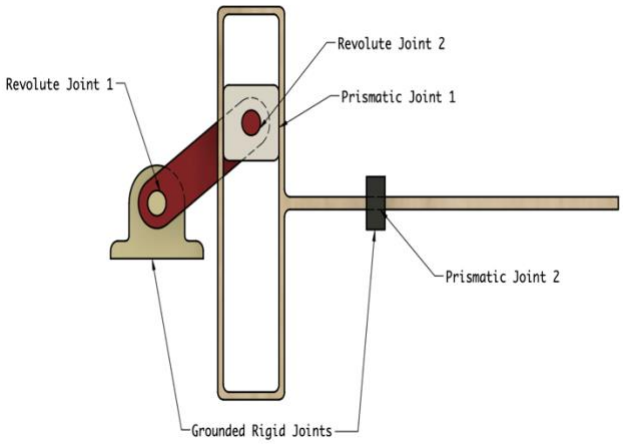

Figure 1(b)

3.1 Structural Composition of Components

The mechanism is composed of five principal bodies – 3 mobile, 2 grounded
(all the units mentioned below are expressed in millimeters):

- **Crank:** a rigid link rotating about a fixed revolute joint and serving as the input element.

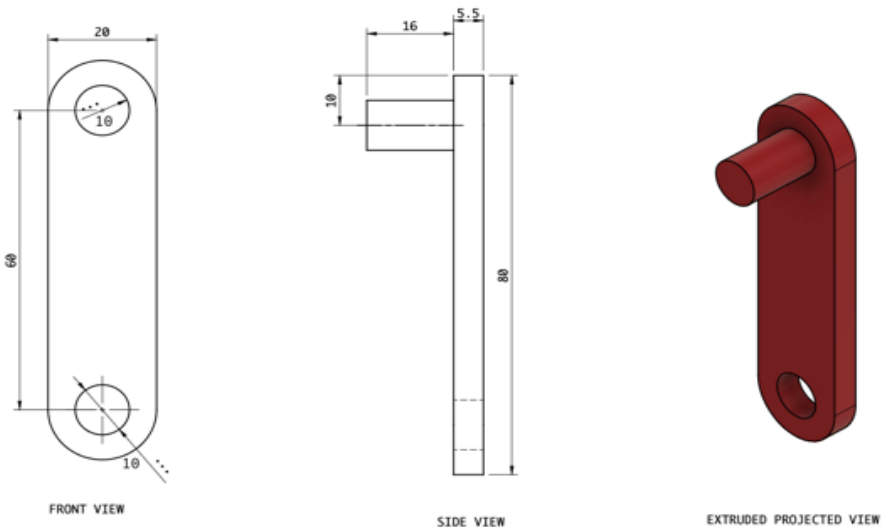

Figure 2(a)

- **Yoke (Slotted Link):** a constrained guide hosting the crank pin, responsible for dictating the slider trajectory.

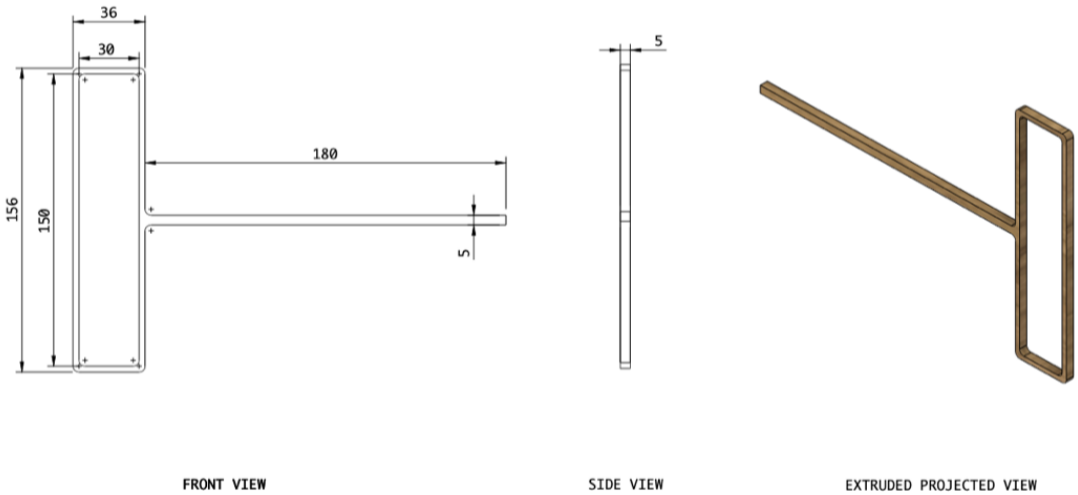

Figure 2(b)

- **Slider:** the link driving the yoke by the input via crank

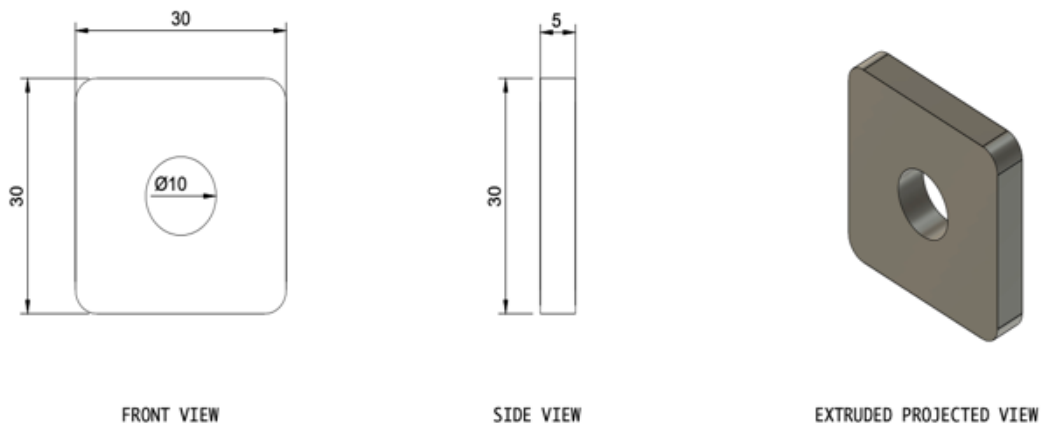

Figure 2(c)

- **Frame:** the fixed supporting structure providing reference constraints and housing the prismatic joint.

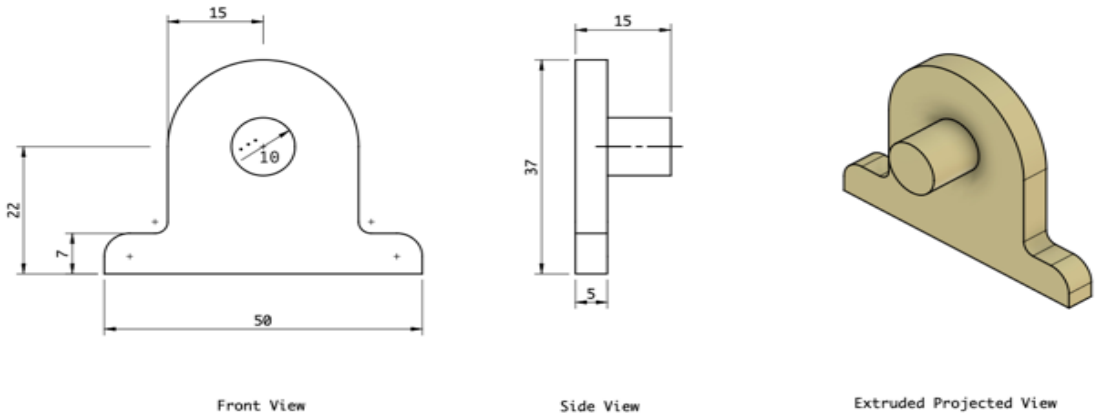

Figure 2(d)

- **Guide:** the grounded structure on which the yoke slides producing a pure linear oscillatory motion.

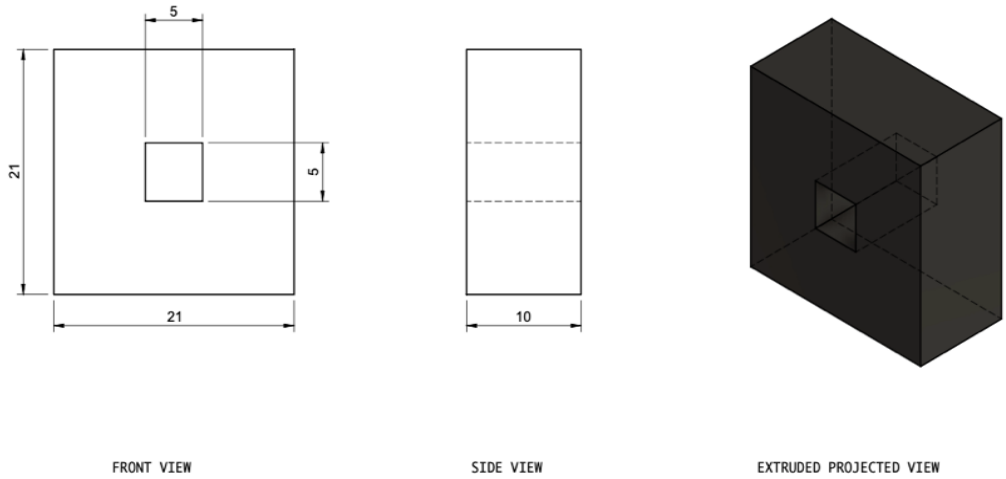

Figure 2(e)

Each component was modelled in Autodesk Inventor as an individual 3D body using *parametric sketches, controlled dimensions,* and *constraint-based assembly methods*. *Revolute* and *prismatic joints* were assigned according to the kinematic pairs defined by the mechanism topology.

From a design perspective, the slot length of the yoke was chosen to be approximately double the crank radius, so that the crank pin never reaches the physical end of the slot over the full rotation. This ensures sufficient clearance for assembly tolerances, reduces the risk of impact loading at stroke reversals, and keeps contact confined to the central region of the slot where stresses are more uniformly distributed. The final geometry therefore satisfies both the kinematic requirements and basic robustness criteria for the simulated operating conditions.

3.2 Assembly of the mechanism

The complete mechanism was assembled using:

- **Revolute Joints:** connecting crank to the frame and crank to slider.

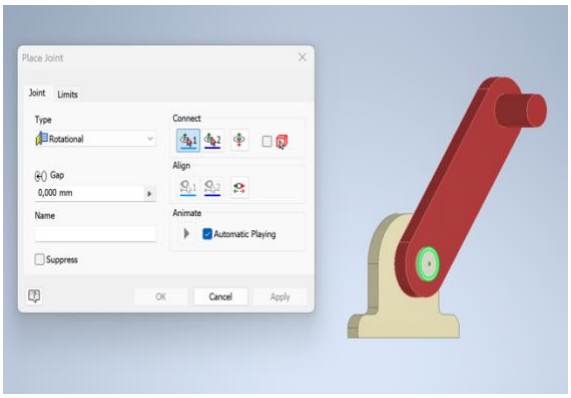

Figure 3(a)

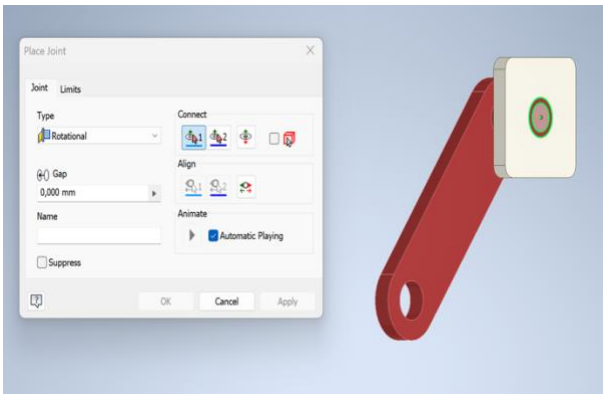

Figure 3(b)

- **Prismatic Joints:** guiding slider translation and slider in yoke translation

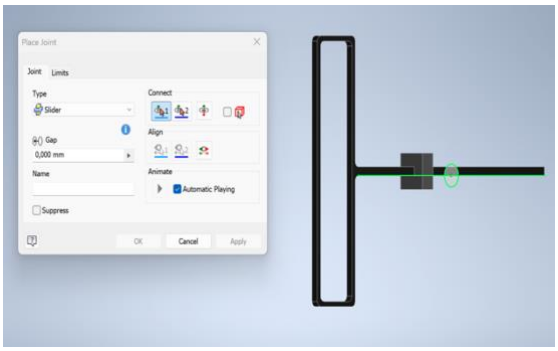

Figure 3(c)

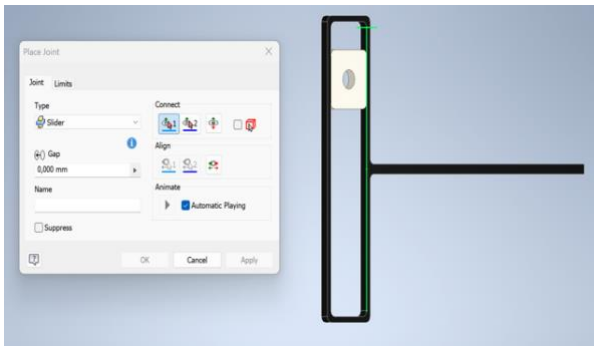

Figure 3(d)

3.3 Kinematic Modelling and DOF Verification

The Scotch Yoke is a **1-DOF mechanism**, satisfying the Grübler–Kutzbach mobility criterion:

$$M = 3(L-1) - 2J_1 - J_2 = 1 \qquad \text{.... Eqn. 1}$$

with $L = 4$ links and *four 1-DOF lower pairs*. A DOF = 1 signifies that one input is sufficient to move the mechanism univocally. Which was further verified by the Inventor's inbuilt redundancy and DOF checker.

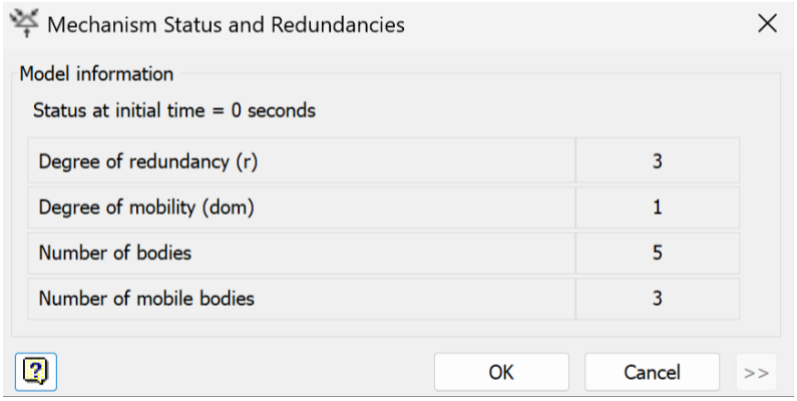

Figure 4

3.4 Dynamic Modelling Framework

Dynamic simulation was enabled by assigning material properties and activating Inventor's Newton–Euler solver. An imposed-velocity input at the crank allowed the software to compute reaction forces and the driving torque needed to maintain constant angular speed. These quantities were exported in spreadsheet format for MATLAB post-processing.

4. SIMULATED OPERATION

This section describes how the Scotch-Yoke mechanism was dynamically evaluated in Autodesk Inventor. Different angular velocity profiles were imposed on the crank, the solver settings were tuned for numerical stability, and two operating conditions (loaded and unloaded) were analysed. The complete workflow—from defining the inputs to exporting the simulation results—is presented below.

4.1 Imposed Velocity and Simulation Workflow

A constant angular velocity of $\omega_0 = 5$ rad/s was applied at the crank using the *Input Motion* tool (Figure 5). After verifying correct DOF and assigning material properties, the solver was configured with a small step size for numerical stability. Inventor then computed all kinematic and dynamic variables, which were exported for MATLAB analysis.

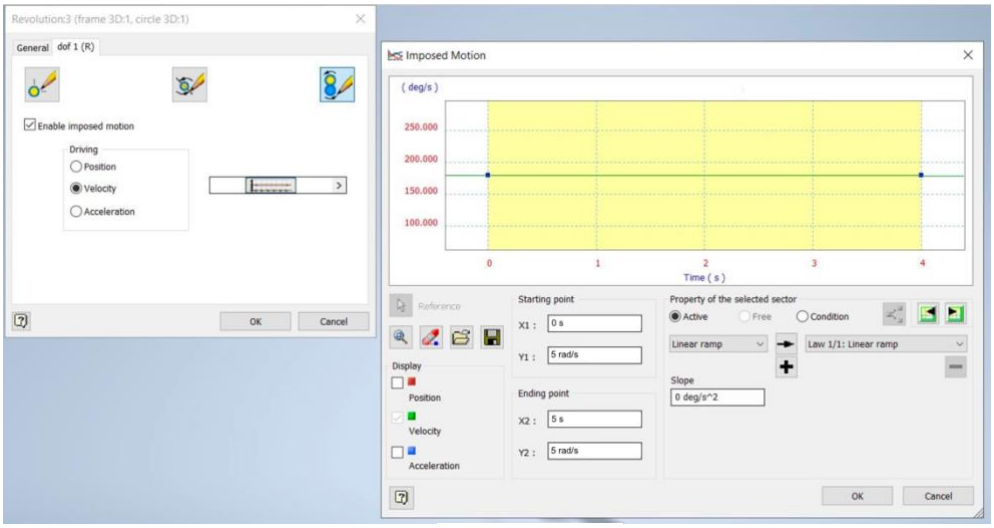

Figure 5

4.2 Load and No-Load Case Study Definition

Two operating scenarios were studied to quantify the influence of external loading on the dynamic behaviour of the mechanism:

a) Unloaded Case

No external force was applied to the slider.
The only forces present were:

- internal joint reactions,
- inertial forces due to link masses,
- geometric constraint forces.

This case reveals the intrinsic behaviour of the mechanism under ideal conditions.

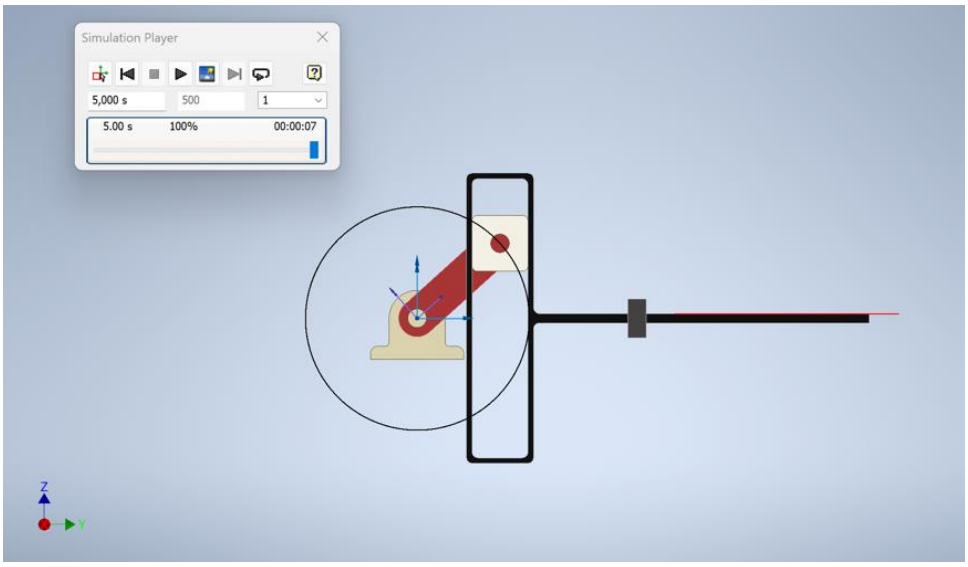

Figure 6

b) Loaded Case

A constant external force of 1N was applied to the slider along the prismatic joint axis (Figure 7, blue arrow) to represent a realistic working condition (e.g., pumping or actuation resistance).
Under this load, the crank must supply additional torque to maintain the same angular velocity.

Inventor automatically computes:

- increased joint reaction forces,
- increased crank torque demand,
- modified acceleration peaks in the slider.

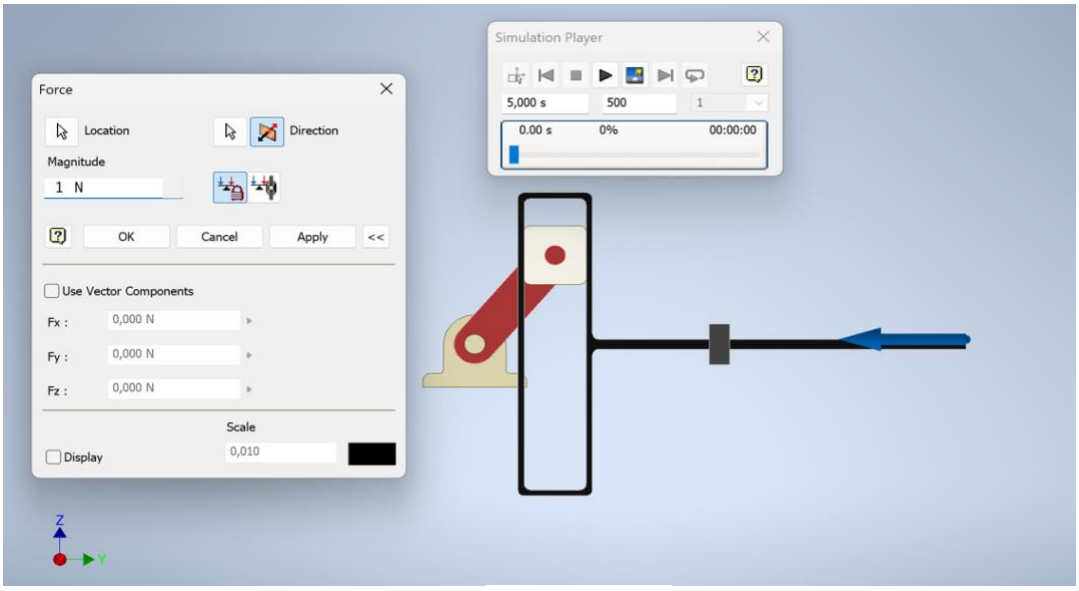

Figure 7

5. RESULTS AND DISCUSSIONS

The numerical data exported from Autodesk Inventor's Dynamic Simulation environment were analysed in MATLAB to evaluate the kinematic and dynamic performance of the Scotch-Yoke mechanism under a constant imposed angular velocity. This section presents a detailed interpretation of the results, explains the underlying mechanical principles, and compares the required driving torque in the unloaded and loaded operating conditions. Since the imposed crank velocity remains identical in both simulations, the kinematic outputs are inherently unchanged; therefore, a single set of displacement, velocity, and acceleration plots is sufficient. The dynamic quantities, in contrast, vary substantially and serve as the focus of comparative analysis.

5.1 Kinematic Results: Position, Velocity, and Acceleration

5.1.1 Theoretical Kinematic Framework

For a Scotch-Yoke mechanism driven at constant angular velocity ω, the slider motion is governed entirely by geometry. The displacement of the slider is:

$$x(t)=R\cos(\omega t) \qquad \text{.... Eqn. 2}$$

where:

- R = crank radius,
- ω = imposed angular velocity,
- t = time.

Differentiating yields:

$$v(t) = \dot{x}(t) = -R\omega sin(\omega t) \qquad \text{.... Eqn. 3}$$
$$a(t) = \ddot{x}(t)=-R\omega^2\cos(\omega t) \qquad \text{.... Eqn. 4}$$

These expressions are independent of any external load. As long as the crank rotates at fixed ω, the mechanism **must** follow these exact profiles.

This is a fundamental property of constrained-motion mechanisms:
When input motion is imposed, output motion is completely determined by geometry, not by forces.

Additionally, from the expressions above, maximum slider velocity $|v| = R\omega$, and maximum acceleration $|a| = R\omega^2$ theoretically occur at θ = 0° and 180° (mid-stroke) and at θ = 90° and 270° (stroke endpoints) respectively.

Since the imposed crank velocity is constant, the angular position evolves linearly as $\theta(t)=\omega t$. Therefore equal time increments correspond to equal angular increments, and the extrema in the slider displacement occur at times $t=\theta/\omega$ corresponding to $\theta=0,\pi,2\pi,\ldots$. This directly explains the uniformly spaced peaks observed in the time-domain plots.

5.1.2 Inventor Simulation Output

Inventor-generated displacement, velocity, and acceleration curves closely matched the theoretical sinusoidal laws:

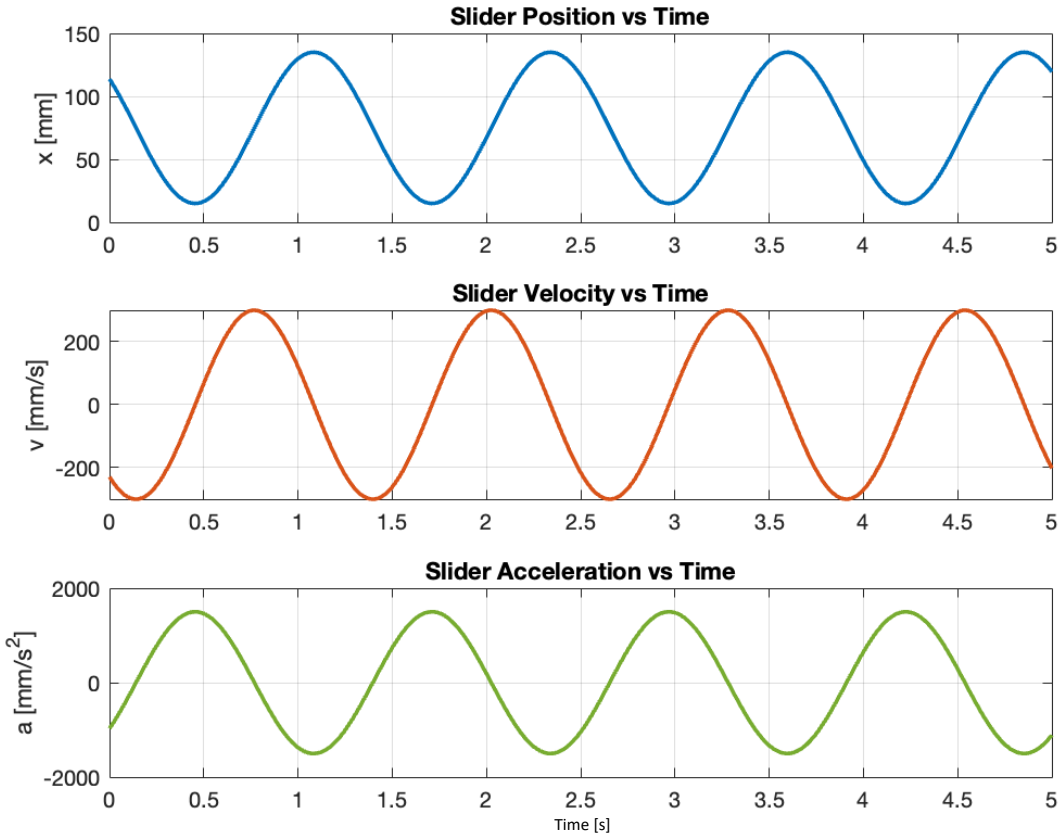

Figure 8

These curves validate:

1. Correct joint definitions
2. Proper mass and inertia modelling
3. Accurate imposed-motion specification
4. Absence of numerical singularities or constraint redundancies
5. Theoretical expectations. (Eqn(s) 3,4,5 verified).

5.1.3 Why Kinematics Remain Identical Under Load

In this study, the crank is driven using **Imposed Angular Velocity**(Figure 5). This means:

- The rotation of the crank is *prescribed*, not solved dynamically.
- Inventor treats the motor as an ideal actuator with infinite authority.
- The mechanism must follow the predefined angular speed profile exactly.

As a consequence:

- The slider's displacement, velocity, and acceleration **do not change** whether a load is present or absent.
- The load only affects the **forces and torques**, not the motion.
- Therefore, presenting a second set of kinematic plots for the loaded case would add no new information.

This behaviour mirrors real world motor-driven systems–If a motor maintains exact speed using feedback control, the motion stays the same even if torque demand increases.

5.2 Dynamic Quantities: Reaction Forces and Driving Torque

Unlike kinematic variables, **dynamic quantities are sensitive to external loading**. When the slider experiences additional resistance, the internal forces and the required motor torque change significantly, even though the motion stays identical.

5.2.1 Definition of Reaction Forces

Reaction forces are internal constraint forces generated at the joints to maintain the imposed kinematic relationships. In a Scotch-Yoke:

- The crank pin applies a force on the yoke slot.
- The slot walls generate equal and opposite reaction forces on the pin.
- These reaction forces transmit mechanical effort from the crank to the slider.

Reaction forces depend on:

- slider inertia,
- geometry of the mechanism,
- external applied load,
- imposed angular velocity.

Under constant angular velocity, Inventor computes reaction forces using the Newton–Euler equations:

$$\sum F = ma \qquad \text{.... Eqn. 5}$$

for linear motion, and similarly the rotational equivalents for the crank..

5.2.2 Definition of Driving Torque

The **driving torque** (also called **motor torque**, **input torque**, or **required actuator torque**) is the torque that the motor must supply at the crank's revolute joint **to maintain the imposed angular velocity profile**.

Inventor computes this by:

1. Taking the total moment balance on the crank:

$$\sum M_{\text{about crank axis}} = I\,\alpha + \text{Reaction Moments} \qquad \text{.... Eqn. 6}$$

Enforcing the constraint:

$$a = \dot{\omega}(t) = 0 (constant\ angular\ velocity)$$

Thus, the driving torque represents:

- the internal effort required to overcome inertia, plus
- the additional torque needed to overcome external load transmitted from the slider.

5.2.3 Physical Meaning of Driving Torque

Driving torque answers the practical engineering question:

How hard must the motor work to keep the crank rotating at constant speed?

This quantity governs:

- motor selection,
- power consumption,
- thermal loading,
- gear sizing,
- shaft strength,
- and system efficiency.

5.3 Comparison Between Loaded and Unloaded Conditions (Torque Analysis)

MATLAB was used to compare the time histories of torque for the two scenarios. The imposed velocity profile was identical in both cases; thus, torque becomes the sole indicator of how load influences the system.

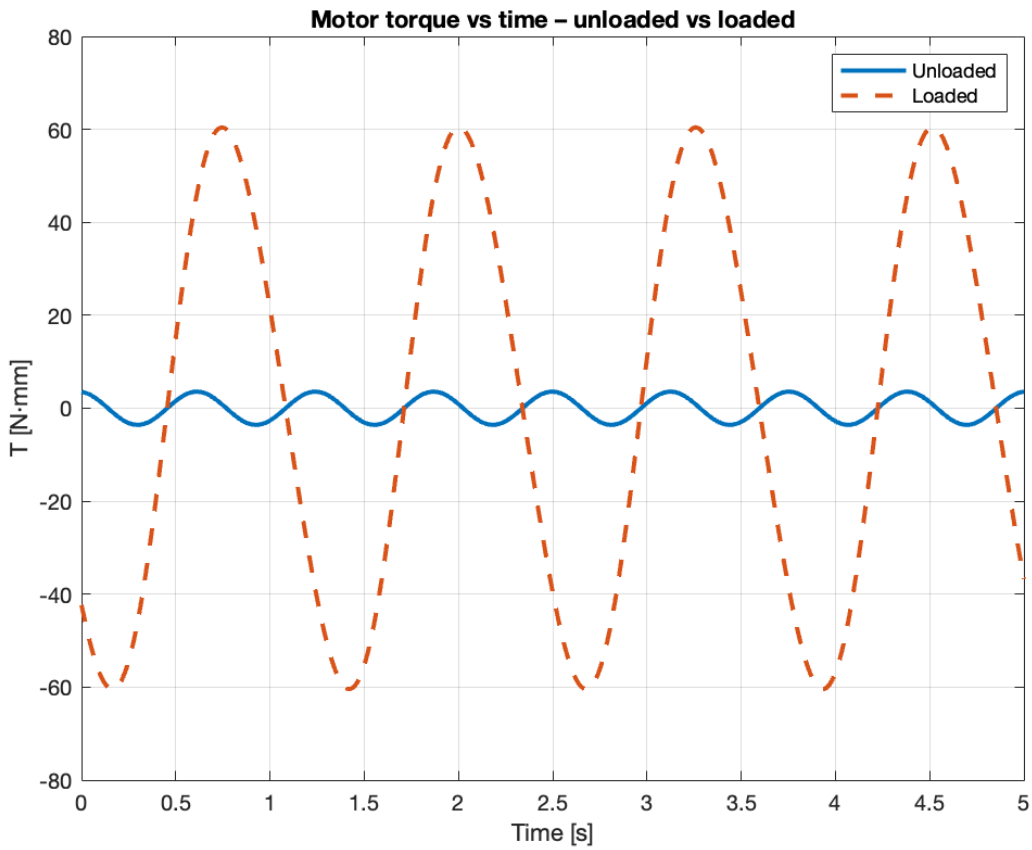

Figure 9

5.3.1 Unloaded Torque Behaviour

In the unloaded scenario:

- Torque oscillates periodically due to changing mechanical advantage.
- Peaks occur when the slider acceleration is greatest (near stroke endpoints).
- The mean torque remains low, since no external work is performed beyond overcoming inertia.

The waveform is smooth and symmetric, confirming ideal periodic behaviour of the mechanism.

5.3.2 Loaded Torque Behaviour

When a constant resisting force is applied to the slider:

- The required torque increases during the half-cycle when the slider moves **against** the load.
- The torque may decrease when the load assists motion.
- The waveform becomes asymmetric due to directional influence of the load.

This behaviour is physically intuitive: A motor must work harder when pushing a load uphill compared to pushing same load downhill.

5.3.3 Extra Torque Required to Maintain Constant Angular Velocity

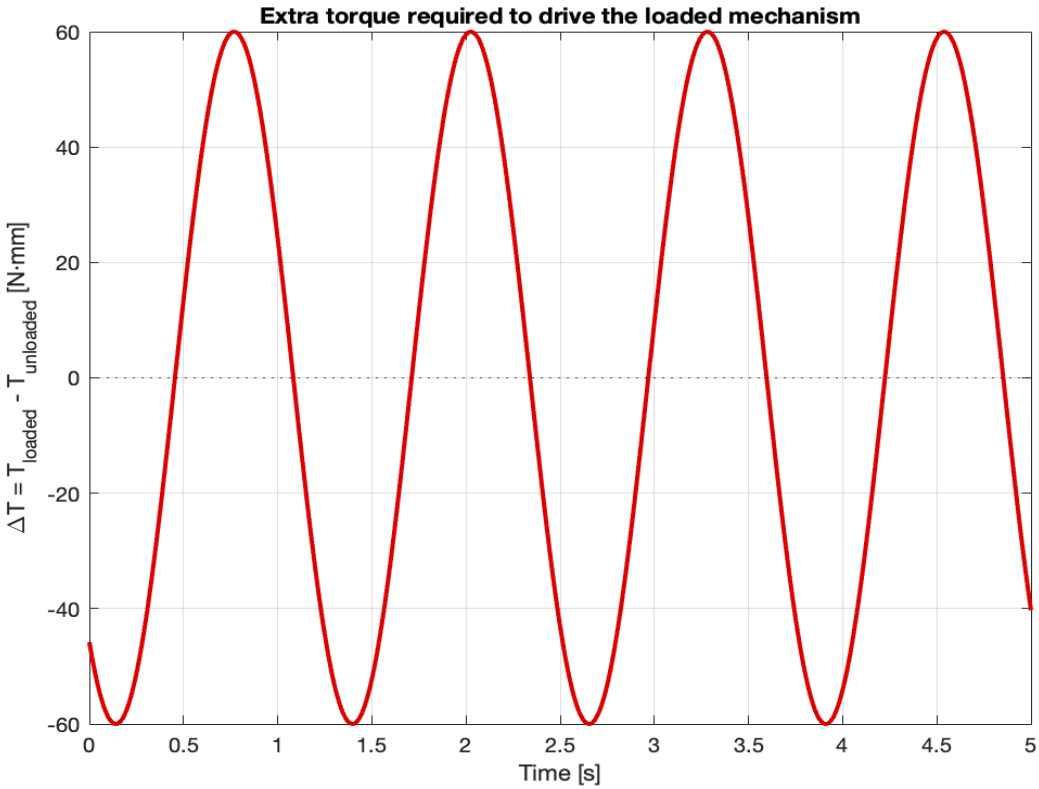

Figure 10

The difference curve:

$$\Delta T(t) = T_{loaded}(t) - T_{unloaded}(t) \qquad \text{.... Eqn. 7}$$

reveals:

- The maximum additional torque required by the motor.
- The exact phase (crank angle) where load effect is strongest.
- Whether load ever assists motion (negative values of ΔT).

This quantity is the most important dynamic metric in the analysis.
It directly captures how the external resistance translates into motor effort.

5.4 Interpretation of the Results

This subsection summarizes the practical engineering insights gained from the simulation.

5.4.1 Torque Is the True Indicator of Load Effects

The driving torque reflects:

- inertial effects of the mechanism,
- work done against external loads,
- instantaneous mechanical advantage,
- energy transfer from motor to slider.

The comparison clearly showed that loading modifies torque demand significantly.

5.4.2 Practical Relevance

Design implications include:

- required motor size and peak torque rating,
- thermal behaviour under continuous operation,
- need for gear reduction to limit torque peaks,
- structural requirements for crank and slider components.

6. Conclusion

This work presented the modelling and dynamic simulation of a Scotch–Yoke mechanism using Autodesk Inventor, with the objective of validating its analytical kinematics and assessing its dynamic behaviour under external loading. A key characteristic of the Scotch–Yoke is its ability to generate *exact* sinusoidal motion. Unlike the classical slider–crank, whose finite connecting rod introduces harmonic distortion, the Scotch–Yoke constrains the slider to follow the horizontal projection of a rotating crank pin. The resulting geometric relationship imposes

$$x(t)=R\cos(\omega t)$$

which leads directly to the harmonic velocity and acceleration profiles:

$$v(t)=-R\omega\sin(\omega t) \qquad a(t)=-R\omega^2\cos(\omega t)$$

The Inventor simulation reproduced these expressions with high fidelity, confirming that the mechanism's kinematics are governed purely by holonomic constraints and **remain unaffected** by external forces when the crank velocity is imposed.

The dynamic analysis highlighted the distinction between invariant kinematic behaviour and load-dependent force transmission. With the actuator enforcing a constant angular speed, the Newton–Euler equations reduce to the computation of the reaction-driven torque required to sustain the prescribed motion. Inventor evaluates this torque through

$$\sum M=I\alpha + M_{reaction}$$

which simplifies to $M_{reaction}$ for $\alpha = 0$. MATLAB post-processing of the torque data revealed clear differences between loaded and unloaded cases: the external resisting force **increased torque peaks, introduced waveform asymmetry**, and **shifted the phases** corresponding to favourable and unfavourable mechanical advantage. The differential quantity

$$\Delta T(t)=T_{loaded}(t)-T_{unloaded}(t)$$

quantified the additional motor effort required throughout the cycle and provided a direct measure relevant to actuator sizing, power estimation, and efficiency considerations.

Overall, the study demonstrates how Autodesk Inventor can be used not only to create parametric mechanism models but also to perform meaningful dynamic analysis that integrates geometric constraints, multibody dynamics, and external numerical tools. The Scotch–Yoke's ideal sinusoidal behaviour makes it a valuable benchmark for validating simulation workflows and exploring how loads influence internal force transmission without altering motion. The combined Inventor–MATLAB workflow established here offers a rigorous and extensible methodology for analysing more complex mechanisms and real motor-driven systems, while also supporting early design decisions such as appropriate crank radius and yoke slot length to avoid impact conditions and excessive contact stresses.

7. References

1. **Autodesk,** *Inventor Professional 2024 – Dynamic Simulation User Guide*, Autodesk Inc., 2024.
2. **Norton, R. L**., *Design of Machinery: An Introduction to the Synthesis and Analysis of Mechanisms and Machines*, McGraw-Hill, 2019.
3. **MATLAB Documentation**, *Data Import and Signal Processing*, MathWorks Inc., 2024.
4. **Kreamer, D. L., & Hunt, K. H.** "Actuator Torque Requirements for Mechanisms with Imposed Motion Inputs." *Mechanism and Machine Theory*, vol. 29, no. 8, 1994,pp. **1081–1097**.
5. **Mecademie.** Scotch-Yoke Mechanism (With Animation). YouTube, 2023

(Ujjwal, 2025)