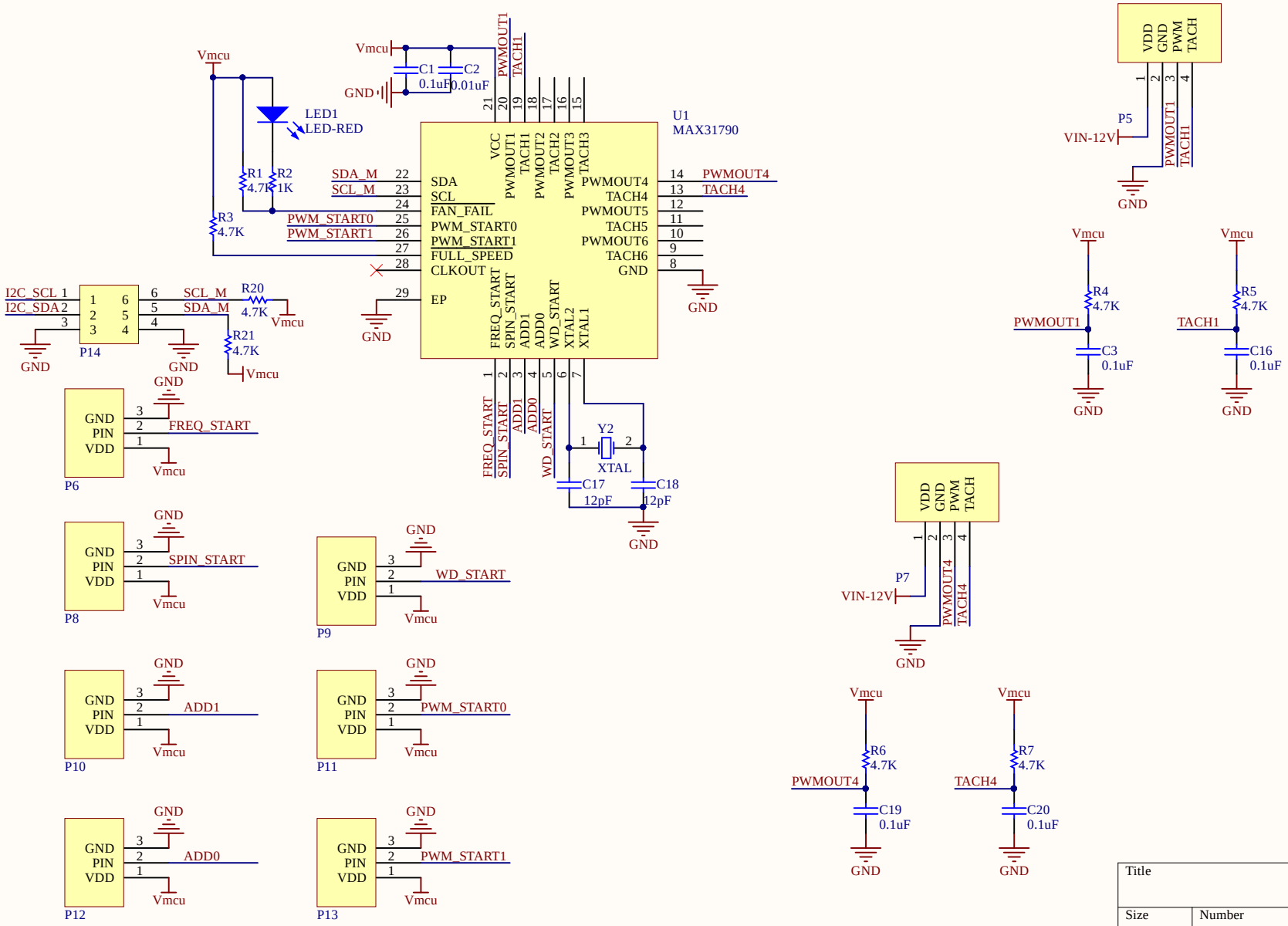

Title		
Size A4	Number	Revision
Date: 2018/6/12	Sheet of	
File: D:\etc\..\MAX31790.SchDoc	Drawn By:	

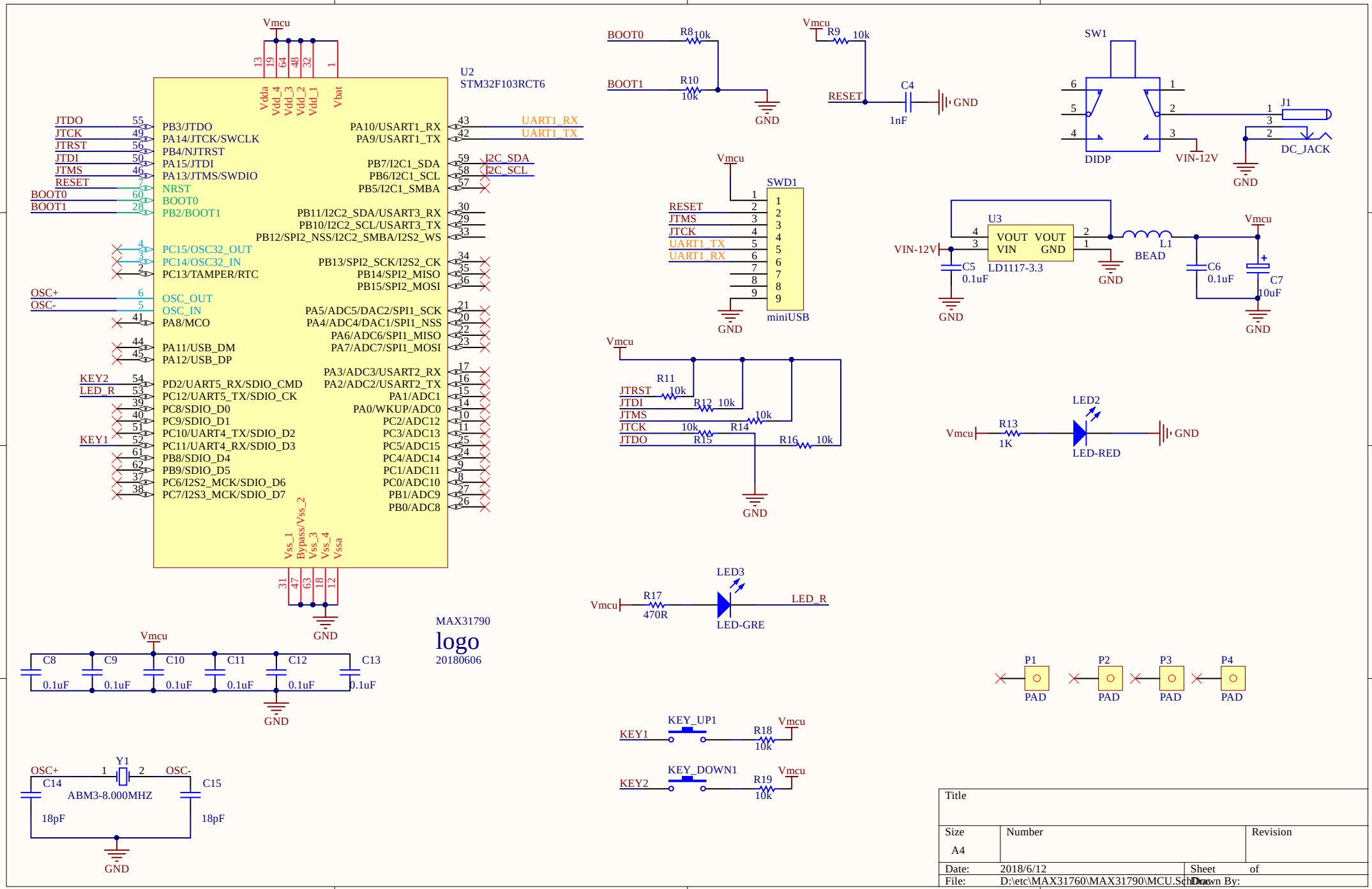
U2
STM32F103RCT6
Vmcu
Vdda
Vdd_4
Vdd_3
Vdd_2
Vdd_1
Vbat
Vss_1
Bypass/Vss_2
Vss_3
Vss_4
Vssa
PB3/JTDO
PA14/JTCK/SWCLK
PB4/NJTRST
PA15/JTDI
PA13/JTMS/SWDIO
NRST
BOOT0
PB2/BOOT1
PC15/OSC32_OUT
PC14/OSC32_IN
PC13/TAMPER/RTC
OSC_OUT
OSC_IN
PA8/MCO
PA11/USB_DM
PA12/USB_DP
PD2/UART5_RX/SDIO_CMD
PC12/UART5_TX/SDIO_CK
PC8/SDIO_D0
PC9/SDIO_D1
PC10/UART4_TX/SDIO_D2
PC11/UART4_RX/SDIO_D3
PB8/SDIO_D4
PB9/SDIO_D5
PC6/I2S2_MCK/SDIO_D6
PC7/I2S3_MCK/SDIO_D7
PA10/USART1_RX
PA9/USART1_TX
PB7/I2C1_SDA
PB6/I2C1_SCL
PB5/I2C1_SMBA
PB11/I2C2_SDA/USART3_RX
PB10/I2C2_SCL/USART3_TX
PB12/SPI2_NSS/I2C2_SMBA/I2S2_WS
PB13/SPI2_SCK/I2S2_CK
PB14/SPI2_MISO
PB15/SPI2_MOSI
PA5/ADC5/DAC2/SPI1_SCK
PA4/ADC4/DAC1/SPI1_NSS
PA6/ADC6/SPI1_MISO
PA7/ADC7/SPI1_MOSI
PA3/ADC3/USART2_RX
PA2/ADC2/USART2_TX
PA1/ADC1
PA0/WKUP/ADC0
PC2/ADC12
PC3/ADC13
PC5/ADC15
PC4/ADC14
PC1/ADC11
PC0/ADC10
PB1/ADC9
PB0/ADC8
JTDO
JTCK
JTRST
JTDI
JTMS
RESET
BOOT0
BOOT1
OSC+
OSC-
KEY2
LED_R
KEY1
UART1_RX
UART1_TX
I2C_SDA
I2C_SCL
GND
MAX31790
logo
20180606
BOOT0
R8 10k
BOOT1
R10 10k
Vmcu
R9 10k
RESET
C4
1nF
GND
SW1
DIDP
VIN-12V
J1
DC_JACK
SWD1
miniUSB
U3
VOUT VOUT
VIN GND
LD1117-3.3
VIN-12V
C5 0.1uF
L1
BEAD
C6 0.1uF
C7 10uF
R11 10k
R12 10k
R14 10k
R15 10k
R16 10k
LED2
R13 1K
LED-RED
LED3
R17 470R
LED-GRE
C8 0.1uF
C9 0.1uF
C10 0.1uF
C11 0.1uF
C12 0.1uF
C13 0.1uF
P1 PAD
P2 PAD
P3 PAD
P4 PAD
KEY_UP1
R18 10k
KEY_DOWN1
R19 10k
Y1
ABM3-8.000MHZ
C14 18pF
C15 18pF
Title
Size A4
Number
Revision
Date: 2018/6/12
Sheet of
File: D:\etc\MAX31760\MAX31790\MCU.SchDoc
Drawn By:

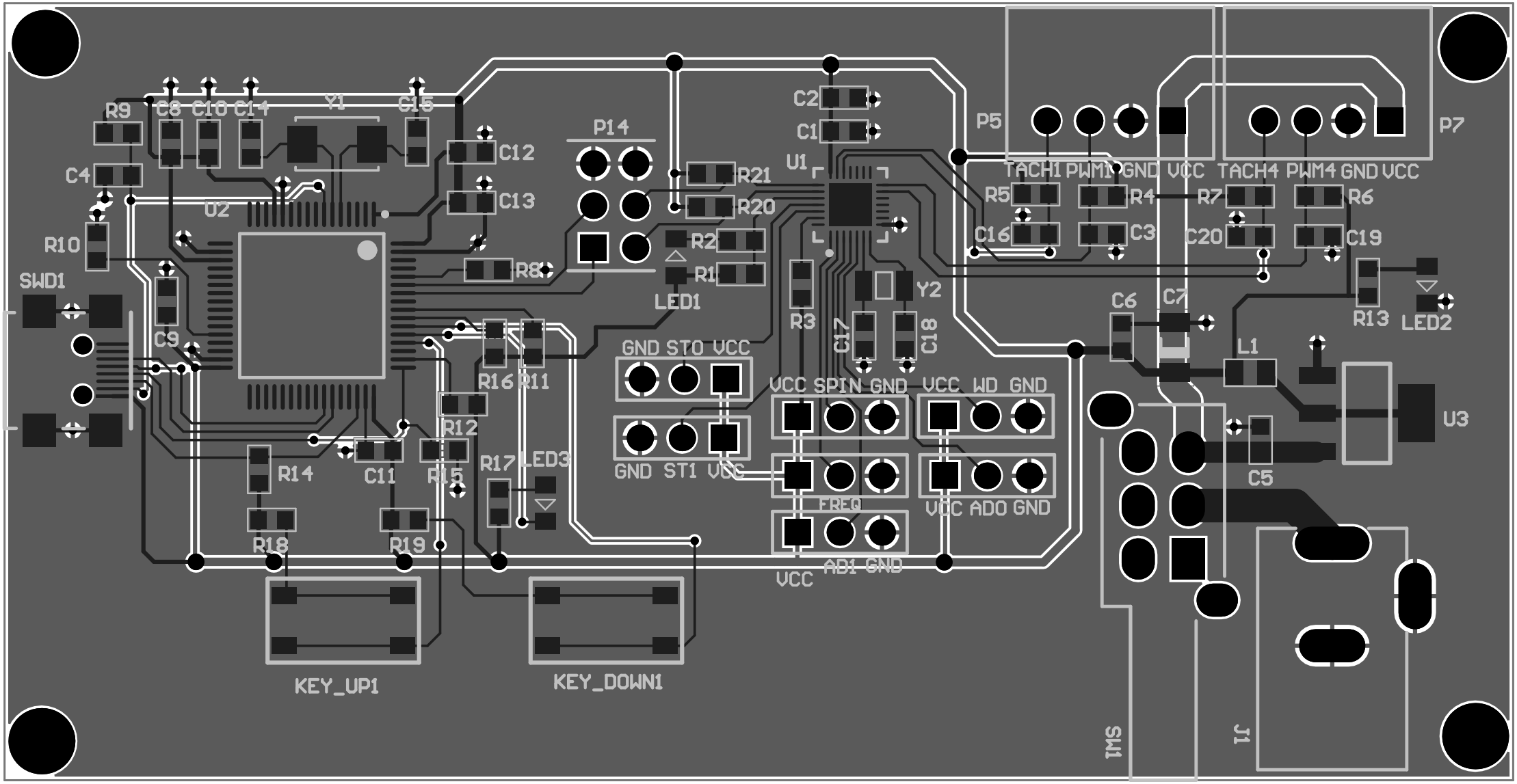
R9
C8
C10
C14
Y1
C15
C4
U2
R10
SWD1
C9
C12
C13
R8
P14
R21
R20
R2
R1
LED1
C2
C1
U1
R3
C17
C18
Y2
P5
TACH1
PWM1
GND
VCC
TACH4
PWM4
GND
VCC
P7
R5
R4
R7
R6
C16
C3
C20
C19
C6
C7
R13
LED2
L1
U3
C5
R16
R11
R12
R14
C11
R15
R17
LED3
R18
R19
GND STO VCC
GND ST1 VCC
VCC SPIN GND
VCC WD GND
FREQ
VCC ADO GND
AD1 GND
VCC
KEY_UP1
KEY_DOWN1
SW1
J1