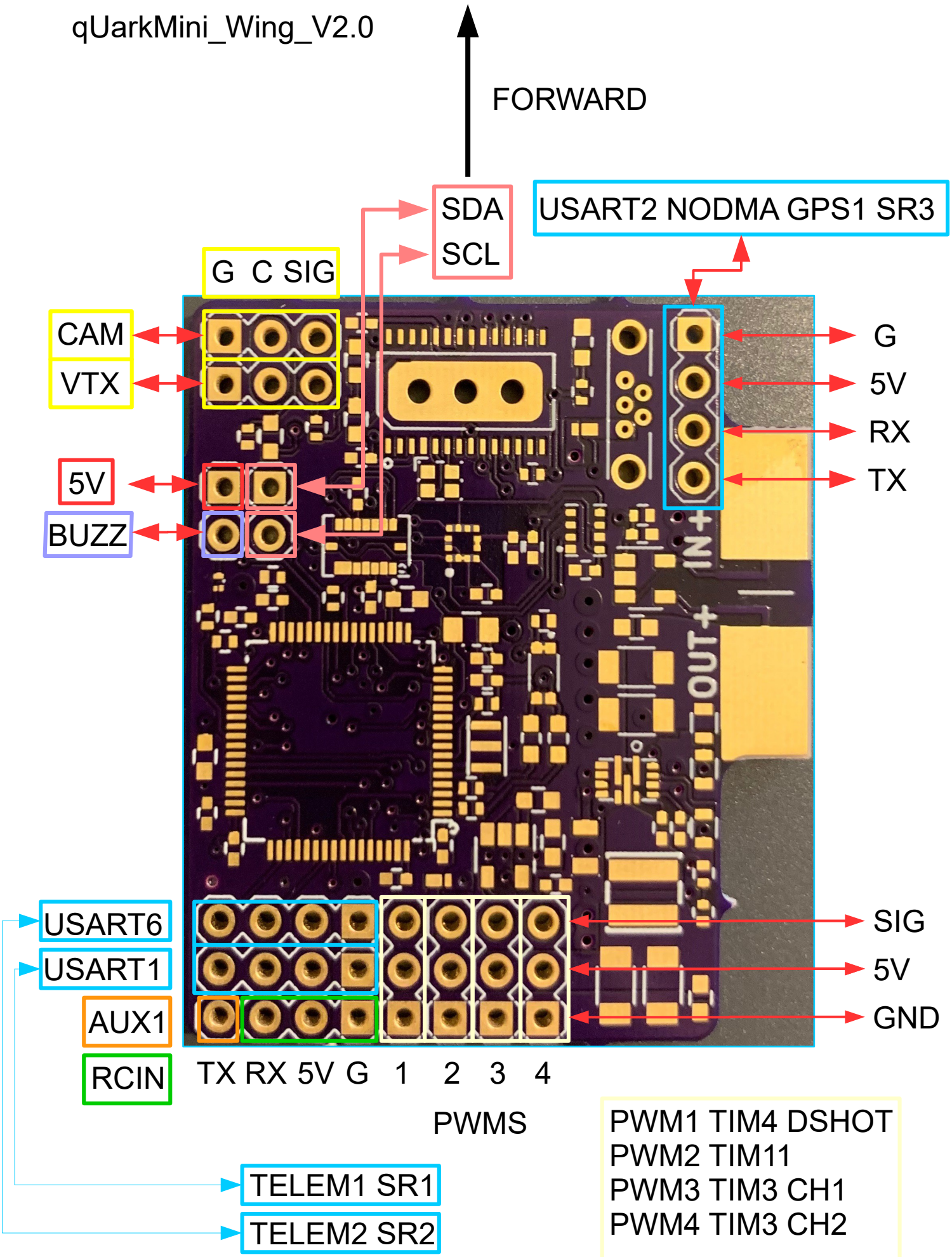
qUarkMini_Wing_V2.0
FORWARD
SDA
SCL
USART2 NODMA GPS1 SR3
G C SIG
CAM
VTX
5V
BUZZ
G
5V
RX
TX
IN+
OUT+
USART6
USART1
AUX1
RCIN
TX RX 5V G
1 2 3 4
PWMS
SIG
5V
GND
TELEM1 SR1
TELEM2 SR2
PWM1 TIM4 DSHOT
PWM2 TIM11
PWM3 TIM3 CH1
PWM4 TIM3 CH2