成功大學
COPYRIGHT 2002 NATIONAL CHENG KUNG UNIVERSITY
National Cheng Kung University

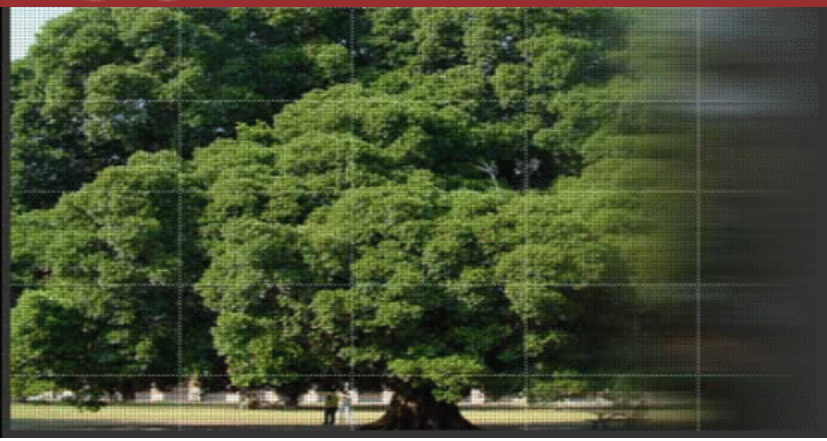

RISC-V Microcontroller On Cmod-A7-35T

Developed by Wei-Feng Huang, DICLAB, NCKU

Outline

成功大學
COPYRIGHT 2002 NATIONAL CHENG KUNG UNIVERSITY

- Overview Microcontroller
- FPGA Selection and Spec
- GPIO / Interrupt System / Timer & PWM / XADC / UART
- Memory Hierarchy
- IP Memory Mapped
- Report
- Software Design Flow
- Standalone Boot Sequence

FPGA Selection and Spec

成功大學
COPYRIGHT 2002 NATIONAL CHENG KUNG UNIVERSITY

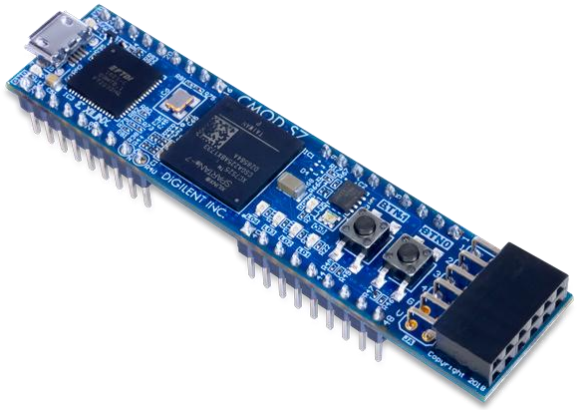

- Board: Cmod-A7-35T
- Chip: xc7a35tcpg236-1
- Breadboard-friendly 48-pin DIP connector
- All 48 DIP pins at LVCMOS33 (3.3 V logic level)
- No series resistors — direct connection to FPGA I/O
- Analog pins: 0–3.3 V input, scaled to 0–1 V via on-board voltage divider
- TWD: 3,092

FPGA Selection and Spec

成功大學
COPYRIGHT 2002 NATIONAL CHENG KUNG UNIVERSITY

$$V_{DIV} = V_{AIN} \times \frac{R_2}{R_1 + R_2} = V_{AIN} \times \frac{1\,k\Omega}{2.32\,k\Omega + 1\,k\Omega} = V_{AIN} \times 0.301$$

$$V_{DIV} = 3.3 \times 0.301 = 0.994\,V$$

$$V_{measured} = V_{ADx_P} - V_{ADx_N} \approx V_{DIV} - 0 = 0.994\,V$$

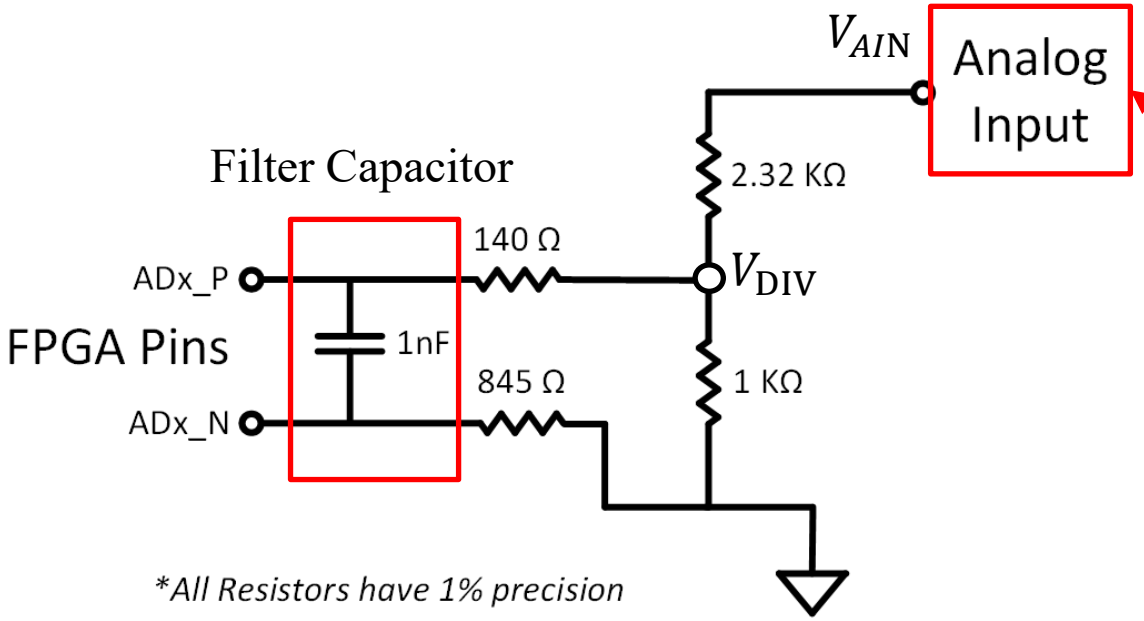

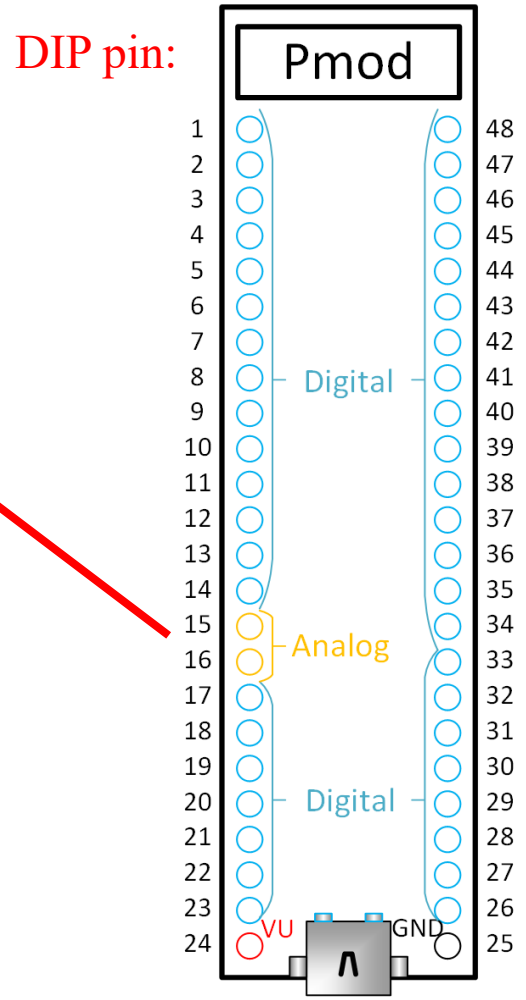

Overview Microcontroller

成功大學
COPYRIGHT 2002 NATIONAL CHENG KUNG UNIVERSITY

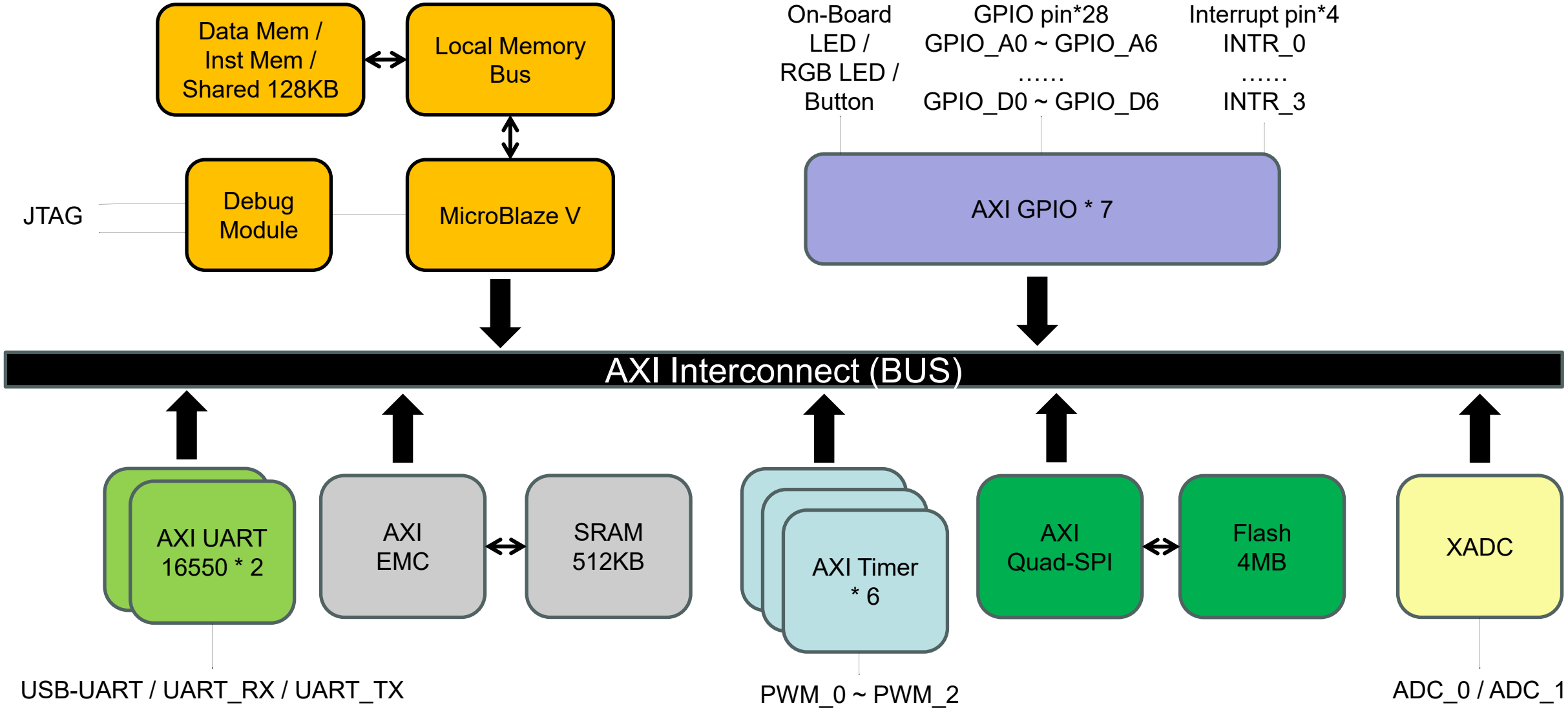

Overview Microcontroller

成功大學
COPYRIGHT 2002 NATIONAL CHENG KUNG UNIVERSITY

- **Processor:** MicroBlaze RISC-V, 32-bit, Single Core
- **Clock:** 100 MHz (12 MHz OSC → Clocking Wizard PLL)
- **ISA Extensions: RV32IM_Zba_Zbb_Zbc_Zbs**
- **Local Memory:** 128 KB BRAM (ILMB + DLMB)
- **Cache:** Disabled (I-Cache & D-Cache both off)
- **Debug:** MDM JTAG — breakpoints, register, memory R/W
- **Interrupt:** AXI INTC, 6 sources (3 Timer + 2 UART + 1 GPIO)

GPIO

成功大學
COPYRIGHT 2002 NATIONAL CHENG KUNG UNIVERSITY

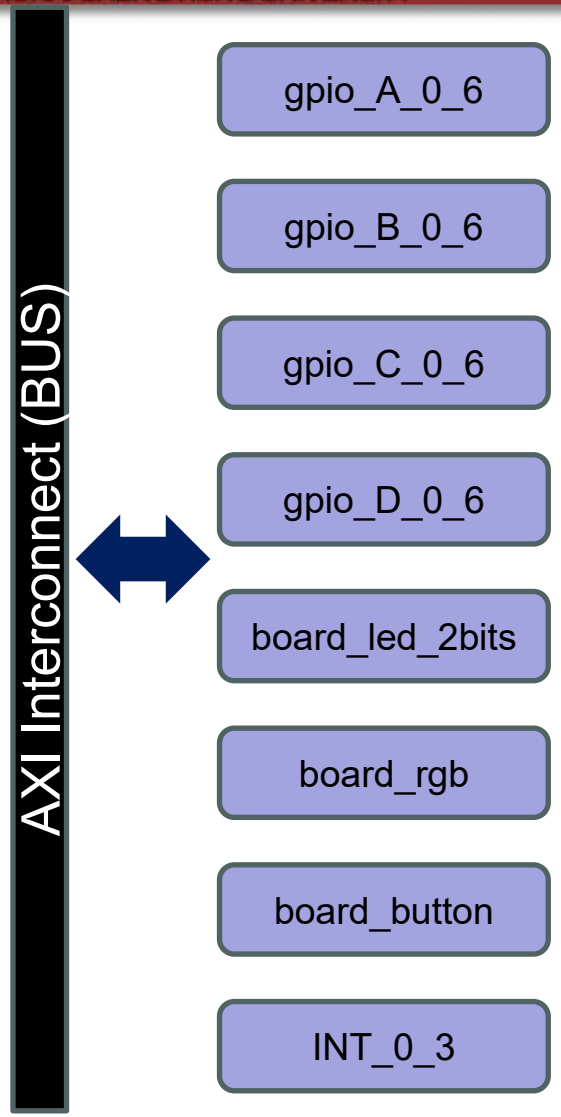

3.1 On-Board GPIO

Instance	AXI Base Address	Width	Direction	Connection	Description
`board_led_2bits`	`0x4000_0000`	2	Output	A17, C16	On-board LEDs × 2
`board_button`	`0x4001_0000`	1	Input	A18	On-board push button × 1
`board_rgb`	`0x4002_0000`	3	Output	B17, B16, C17	On-board RGB LED (R/G/B)

3.2 DIP Connector GPIO (4 Groups × 7-bit)

Instance	AXI Base Address	Width	DIP Pins	Description
`gpio_A_0_6`	`0x4003_0000`	7	Pin 1–7	GPIO Group A, bidirectional I/O
`gpio_B_0_6`	`0x4004_0000`	7	Pin 17–23	GPIO Group B, bidirectional I/O
`gpio_C_0_6`	`0x4005_0000`	7	Pin 42–48	GPIO Group C, bidirectional I/O
`gpio_D_0_6`	`0x4006_0000`	7	Pin 26–32	GPIO Group D, bidirectional I/O

3.3 External Interrupt Inputs (`INT_0_3`)

Parameter	Value
AXI Base Address	`0x4007_0000`
Width	4-bit (all inputs)
Interrupt Capability	Enabled (`C_INTERRUPT_PRESENT = 1`)

Timer & PWM

COPYRIGHT 2002 NATIONAL CHENG KUNG UNIVERSITY

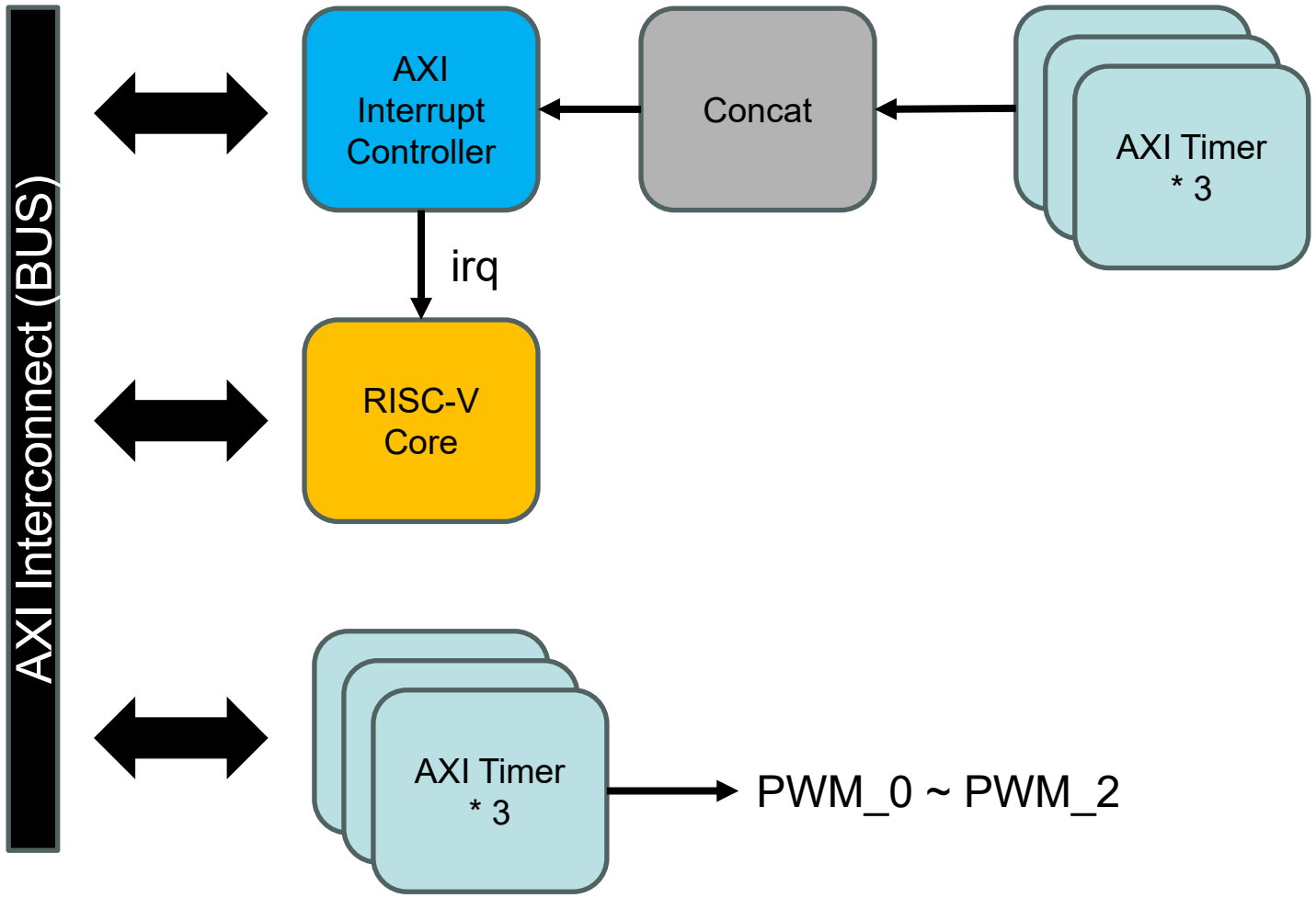

6 AXI Timer Instances — Two Roles:

3 × System Timers (timer_0 / timer_1 / timer_2)

•Connected to AXI Interrupt Controller

•Generate periodic interrupts for scheduling, timeout, or time measurement

3 × PWM Timers (PWM_0 / PWM1 / PWM_2)

•Configured in PWM mode

•Used for servo control (SG90)

All 6 timers are the same IP, the difference is purely in how they are used — interrupt source vs. PWM output.

Timer & PWM

成功大學
COPYRIGHT 2002 NATIONAL CHENG KUNG UNIVERSITY

4.1 System Timers

Instance	AXI Base Address	Mode	Interrupt	Description
`timer_0`	`0x41C0_0000`	32-bit (`Default`)	`xlconcat In0`	General-purpose system timer
`timer_1`	`0x41C4_0000`	Default	`xlconcat In1`	General-purpose timer
`timer_2`	`0x41C5_0000`	Default	`xlconcat In2`	General-purpose timer

4.2 PWM Outputs

Instance	AXI Base Address	Output Pin	DIP Pin	Description
`PWM_0`	`0x41C1_0000`	J3	Pin 10	PWM Channel 0
`PWM_1`	`0x41C2_0000`	W3	Pin 34	PWM Channel 1
`PWM_2`	`0x41C3_0000`	W4	Pin 40	PWM Channel 2

Description: AXI Timer instances configured in PWM mode to generate square-wave outputs. Useful for LED dimming, motor speed control, buzzer tone generation, etc. Frequency and duty cycle are configured through the Timer Load Registers and the PWM enable bit.

UART

成功大學
COPYRIGHT 2002 NATIONAL CHENG KUNG UNIVERSITY

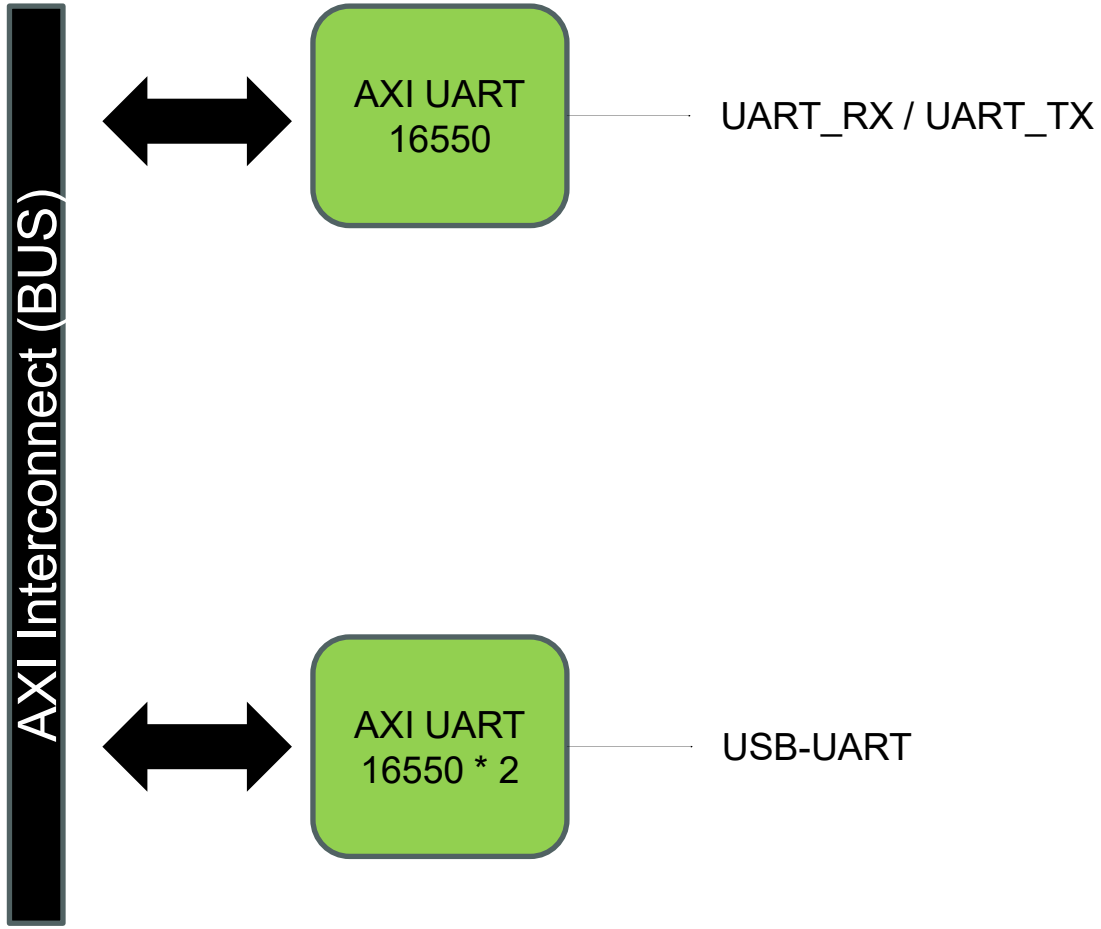

2 × AXI UART 16550 Instances:

uart_USB — Console / Debug

- Connected to on-board USB-UART via Micro-USB (J3)
- No DIP pin exposed — accessed through USB cable

uart_1 — External Communication

- TX/RX routed to DIP Pin 11 / Pin 12
- Available for connecting external devices (sensors, modules, another MCU)

UART

成功大學
COPYRIGHT 2002 NATIONAL CHENG KUNG UNIVERSITY

2.1 USB UART (`uart_USB`)

Parameter	Value
IP Version	`xilinx.com:ip:axi_uart16550:2.0`
AXI Base Address	`0x44A0_0000`
Address Range	64 KB (0x44A0_0000 – 0x44A0_FFFF)
TX Pin	J18 (via Micro-USB connector)
RX Pin	J17 (via Micro-USB connector)
Interrupt	Connected to `xlconcat In4`

2.2 External UART (`uart_1`)

Parameter	Value
IP Version	`xilinx.com:ip:axi_uart16550:2.0`
AXI Base Address	`0x44A1_0000`
Address Range	64 KB (0x44A1_0000 – 0x44A1_FFFF)
TX Pin	J1 (DIP Pin 11)
RX Pin	K2 (DIP Pin 12)
Interrupt	Connected to `xlconcat In3`

Description: Second 16550 UART exposed on the DIP connector for communication with external devices (e.g., sensor modules, Bluetooth modules).

XADC

COPYRIGHT 2002 NATIONAL CHENG KUNG UNIVERSITY

XADC — On-chip Analog-to-Digital Converter

- Built-in 12-bit ADC inside Artix-7 FPGA

Enabled Channels (Continuous Sequencer):

- VAUX4 (DIP Pin 15) — external analog input
- VAUX12 (DIP Pin 16) — external analog input
- Temperature — on-chip die temperature
- VCCINT — core voltage monitor (1.0 V)
- VCCAUX — auxiliary voltage monitor (1.8 V)

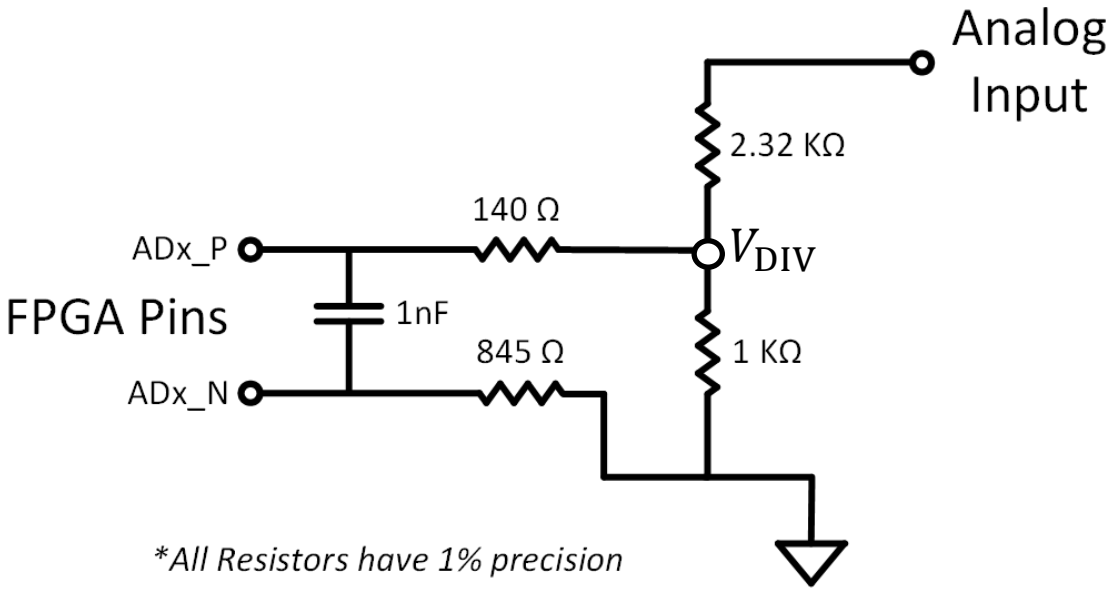

Key Specs:

- Total conversion rate: 500 Kilo Samples Per Second (KSPS)
- Per-channel effective rate: ~100 KSPS (500K ÷ 5 channels)
- Input range: 0–1 V at FPGA pins (3.3 V on DIP pin scaled by on-board voltage divider)
- Resolution: 12-bit (4096 levels)

Interrupt System

成功大學
COPYRIGHT 2002 NATIONAL CHENG KUNG UNIVERSITY

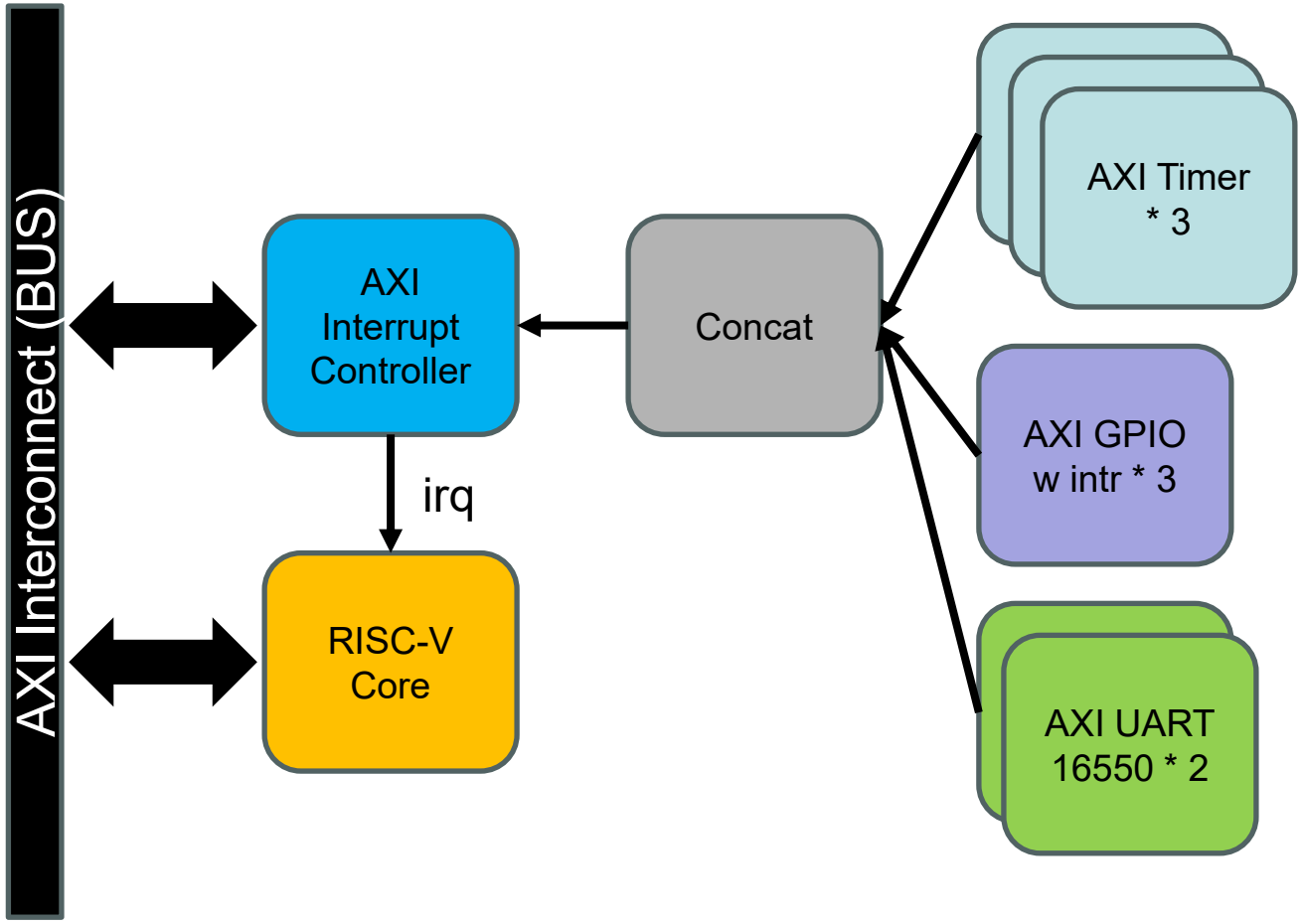

Interrupt handling flow (Normal Mode) :

1.Peripheral asserts interrupt line

2.Concat interrupt lines → AXI Interrupt Controller

3.AXI Interrupt Controller asserts IRQ → CPU

4.CPU jumps to fixed ISR entry point

5.Reads axi_intc register to identify source

6.Branches to corresponding handler

7.Handler processes the event

8.Clear peripheral interrupt first

9.Then clear axi_intc

10.Return from ISR, CPU resumes normal execution

Memory Hierarchy

成功大學
COPYRIGHT 2002 NATIONAL CHENG KUNG UNIVERSITY

IP Memory Mapped

成功大學
COPYRIGHT 2002 NATIONAL CHENG KUNG UNIVERSITY

AXI Base Address	Range	Peripheral	IP Type	Category
0x0000_0000	128K / 128K	Local Memory (BRAM)	blk_mem_gen	Memory
0x4000_0000	64K	board_led_2bits	axi_gpio	GPIO
0x4001_0000	64K	board_button	axi_gpio	GPIO
0x4002_0000	64K	board_rgb	axi_gpio	GPIO
0x4003_0000	64K	gpio_A_0_6	axi_gpio	GPIO
0x4004_0000	64K	gpio_B_0_6	axi_gpio	GPIO
0x4005_0000	64K	gpio_C_0_6	axi_gpio	GPIO
0x4006_0000	64K	gpio_D_0_6	axi_gpio	GPIO
0x4007_0000	64K	INT_0_3	axi_gpio	Interrupt
0x4120_0000	64K	axi_intc	axi_intc	System
0x41C0_0000	64K	timer_0	axi_timer	Timer
0x41C1_0000	64K	PWM_0	axi_timer	PWM
0x41C2_0000	64K	PWM_1	axi_timer	PWM
0x41C3_0000	64K	PWM_2	axi_timer	PWM
0x41C4_0000	64K	timer_1	axi_timer	Timer
0x41C5_0000	64K	timer_2	axi_timer	Timer
0x44A0_0000	64K	uart_USB	axi_uart16550	Communication
0x44A1_0000	64K	uart_1	axi_uart16550	Communication
0x44A2_0000	64K	axi_quad_spi_0	axi_quad_spi	Memory
0x44A3_0000	64K	xadc_wiz_0	xadc_wiz	ADC
0x6000_0000	32M	axi_emc_0	axi_emc	Memory

Report

成功大學
COPYRIGHT 2002 NATIONAL CHENG KUNG UNIVERSITY

Utilization Post-Synthesis | **Post-Implementation**

Graph | Table

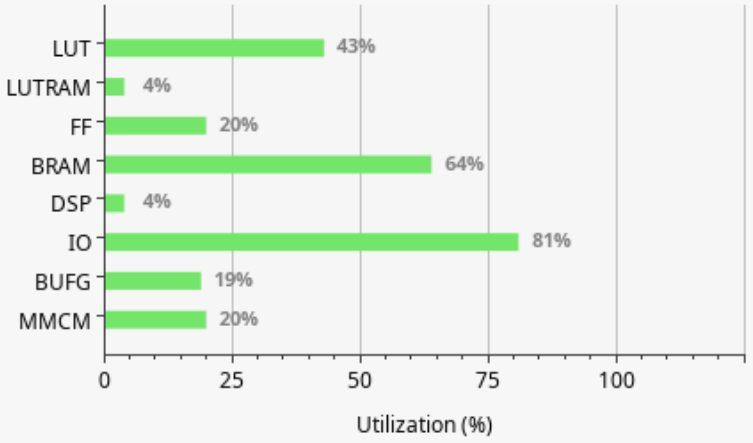

Utilization Post-Synthesis | **Post-Implementation**

Graph | **Table**

Resource	Utilization	Available	Utilization %
LUT	8954	20800	43.05
LUTRAM	429	9600	4.47
FF	8369	41600	20.12
BRAM	32	50	64.00
DSP	4	90	4.44
IO	86	106	81.13
BUFG	6	32	18.75
MMCM	1	5	20.00

Timing **Setup** | Hold | Pulse Width

Worst Negative Slack (WNS):	0.616 ns
Total Negative Slack (TNS):	0 ns
Number of Failing Endpoints:	0
Total Number of Endpoints:	20847

Implemented Timing Report

Power Summary | **On-Chip**

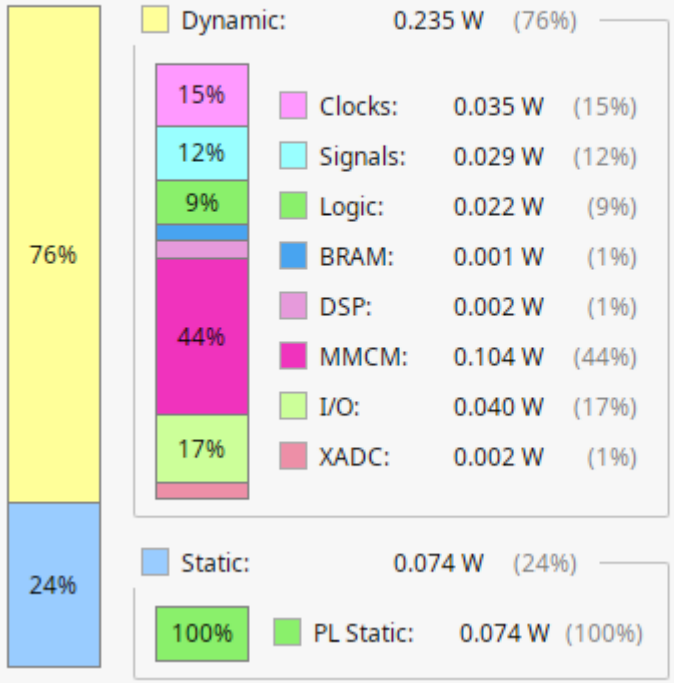

Software Design Flow

成功大學
COPYRIGHT 2002 NATIONAL CHENG KUNG UNIVERSITY

Ripes

File Edit View Help

1 ms

Editor
Processor
Cache
Memory
I/O

Source code

Input type: Assembly C Executable code

View mode: Binary Disassembled

Current input source: Executable (ELF)

File: /tmp/Ripes.aibzpC

Note: Enabling the editor will clear any currently loaded program from the simulator

Enable editor

```
10318:  fcf42e23  sw x15 -36 x8
1031c:  000137b7  lui x15 0x13
10320:  9e87a783  lw x15 -1560 x15
10324:  fcf42623  sw x15 -52 x8
10328:  000137b7  lui x15 0x13
1032c:  9ec7a783  lw x15 -1556 x15
10330:  fcf42423  sw x15 -56 x8
10334:  06400793  addi x15 x0 100
10338:  fcf42223  sw x15 -60 x8
1033c:  00100793  addi x15 x0 1
10340:  fcf42823  sw x15 -48 x8
10344:  1640006f  jal x0 356
10348:  000137b7  lui x15 0x13
1034c:  9c878513  addi x10 x15 -1592
10350:  e61ff0ef  jal x1 -416 <printString>
10354:  fd042503  lw x10 -48 x8
10358:  e29ff0ef  jal x1 -472 <printInt>
1035c:  000137b7  lui x15 0x13
10360:  9b078513  addi x10 x15 -1616
10364:  e4dff0ef  jal x1 -436 <printString>
10368:  fd442703  lw x14 -44 x8
1036c:  000077b7  lui x15 0x7
10370:  bdb78793  addi x15 x15 -1061
10374:  02f707b3  mul x15 x14 x15
10378:  faf42e23  sw x15 -68 x8
1037c:  fbc42703  lw x14 -68 x8
10380:  000127b7  lui x15 0x12
10384:  28f78793  addi x15 x15 655          WB
10388:  02f767b3  rem x15 x14 x15           MEM
1038c:  fcf42a23  sw x15 -44 x8             EX
10390:  fd442503  lw x10 -44 x8             ID
10394:  655010ef  jal x1 7764 <__floatsisf> IF
```

Console Memory

Console

```
Running RanPI...
        Iteration: 1
```

gpr

Name	Alias	Value
x0	zero	0x00000000
x1	ra	0x00010368
x2	sp	0x7fffff80
x3	gp	0x00013810
x4	tp	0x00000000
x5	t0	0x000100ac
x6	t1	0x0000000f
x7	t2	0x00000000
x8	s0	0x7ffffff0
x9	s1	0x00000000
x10	a0	0x000129b0
x11	a1	0x7ffffff4
x12	a2	0x00000000
x13	a3	0x00000000
x14	a4	0x03237061
x15	a5	0x00012000
x16	a6	0x00000000
x17	a7	0x00000004
x18	s2	0x00000000
x19	s3	0x00000000
x20	s4	0x00000000
x21	s5	0x00000000
x22	s6	0x00000000
x23	s7	0x00000000
x24	s8	0x00000000
x25	s9	0x00000000
x26	s10	0x00000000

Display type: Hex

Processor: 5-stage processor ISA: RV32IMC

Software Design Flow

成功大學
COPYRIGHT 2002 NATIONAL CHENG KUNG UNIVERSITY

Ripes

File Edit View Help

1 ms

Editor
Processor
Cache
Memory
I/O

Memory viewer

Address	Word	Byte 0	Byte 1	Byte 2	Byte 3
0x00000084	0x00013444	0x44	0x34	0x01	0x00
0x00000080	0x00000000	0x00	0x00	0x00	0x00
0x0000007c	0x00070003	0x03	0x00	0x07	0x00
0x00000078	0x00000000	0x00	0x00	0x00	0x00
0x00000074	0x00013438	0x38	0x34	0x01	0x00
0x00000070	0x00000000	0x00	0x00	0x00	0x00
0x0000006c	0x00060003	0x03	0x00	0x06	0x00
0x00000068	0x00000000	0x00	0x00	0x00	0x00
0x00000064	0x00013010	0x10	0x30	0x01	0x00
0x00000060	0x00000000	0x00	0x00	0x00	0x00
0x0000005c	0x00050003	0x03	0x00	0x05	0x00
0x00000058	0x00000000	0x00	0x00	0x00	0x00
0x00000054	0x0001300c	0x0c	0x30	0x01	0x00
0x00000050	0x00000000	0x00	0x00	0x00	0x00
0x0000004c	0x00040003	0x03	0x00	0x04	0x00
0x00000048	0x00000000	0x00	0x00	0x00	0x00
0x00000044	0x00013004	0x04	0x30	0x01	0x00
0x00000040	0x00000000	0x00	0x00	0x00	0x00
0x0000003c	0x00030003	0x03	0x00	0x03	0x00
0x00000038	0x00000000	0x00	0x00	0x00	0x00
0x00000034	0x00013000	0x00	0x30	0x01	0x00
0x00000030	0x00000000	0x00	0x00	0x00	0x00
0x0000002c	0x00020003	0x03	0x00	0x02	0x00
0x00000028	0x00000000	0x00	0x00	0x00	0x00
0x00000024	0x000129b0	0xb0	0x29	0x01	0x00
0x00000020	0x00000000	0x00	0x00	0x00	0x00
0x0000001c	0x00010003	0x03	0x00	0x01	0x00

Display type: Hex Go to register: Go to section:

Memory map

Name	Size	Range
.symtab	1632	0x00000000 - 0x0000065f
.text	10552	0x00010074 - 0x000129ab
.rodata	576	0x000129b0 - 0x00012bef
.eh_frame	4	0x00013000 - 0x00013003
.init_array	8	0x00013004 - 0x0001300b
.fini_array	4	0x0001300c - 0x0001300f
.data	1064	0x00013010 - 0x00013437
.sdata	12	0x00013438 - 0x00013443
.bss	0	0x00013444 - 0x00013443

Processor: 5-stage processor ISA: RV32IMC

Software Design Flow for Debug

成功大學
COPYRIGHT 2002 NATIONAL CHENG KUNG UNIVERSITY

Two development approaches:

1. Xilinx Vitis + Embedded SW Libraries
   - Official IDE with BSP auto-generation
   - Includes drivers for all AXI peripherals (GPIO, UART, Timer, SPI, EMC)

2. RISC-V GNU Toolchain
   - Standalone GCC cross-compiler (riscv32-unknown-elf / riscv64-unknown-elf)
   - Full control over linker scripts, startup code, and register-level access
   - No dependency on Xilinx toolchain

Both target the MicroBlaze RISC-V soft processor running on the Cmod A7-35T.

AMD Vitis

riscv-collab/**riscv-gnu-toolchain**

GNU toolchain for RISC-V, including GCC

100 Contributors | 29 Issues | 4k Stars | 1k Forks

Software Design Flow for Debug

成功大學
COPYRIGHT 2002 NATIONAL CHENG KUNG UNIVERSITY

XSDB (Xilinx System Debugger)

- Command-line debug interface over JTAG
- Connects to MicroBlaze via MDM (MicroBlaze Debug Module)
- Capabilities:
  - Download ELF directly to BRAM/SRAM — no Flash needed
  - Halt, step, and resume CPU execution
  - Read/write memory and registers in real time
- Enables rapid code-test-fix cycles during development
- No bootloader required

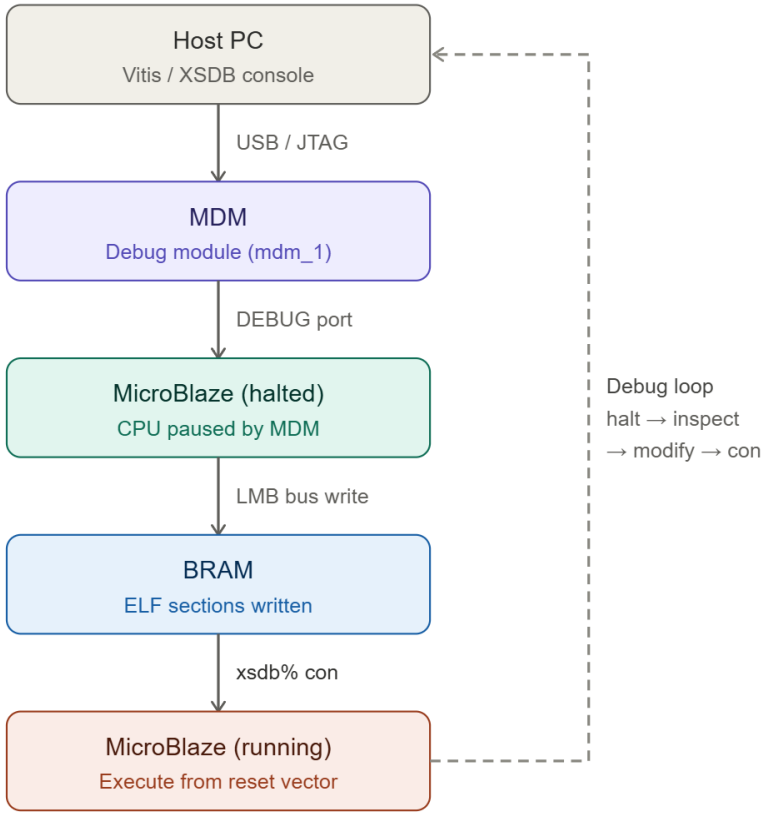

Standalone Boot Sequence

成功大學
COPYRIGHT 2002 NATIONAL CHENG KUNG UNIVERSITY

?

Issue to Address

成功大學
COPYRIGHT 2002 NATIONAL CHENG KUNG UNIVERSITY

- Interrupt (GPIO / Timer)
- GPIO input
- uart 16550 Baud Rate 更改
- XADC 五個channel讀值
- QSPI 內建 Bitstream
- EMC SRAM 使用
- Memory Hier 設計
- Standalone Boot Sequence流程