Cmod A7-35T Power Specification

1. Overview

The Cmod A7-35T uses a **Linear Technologies LTC3569** triple-output buck regulator (IC10) to generate all onboard supply voltages from a single input rail called **VU**.

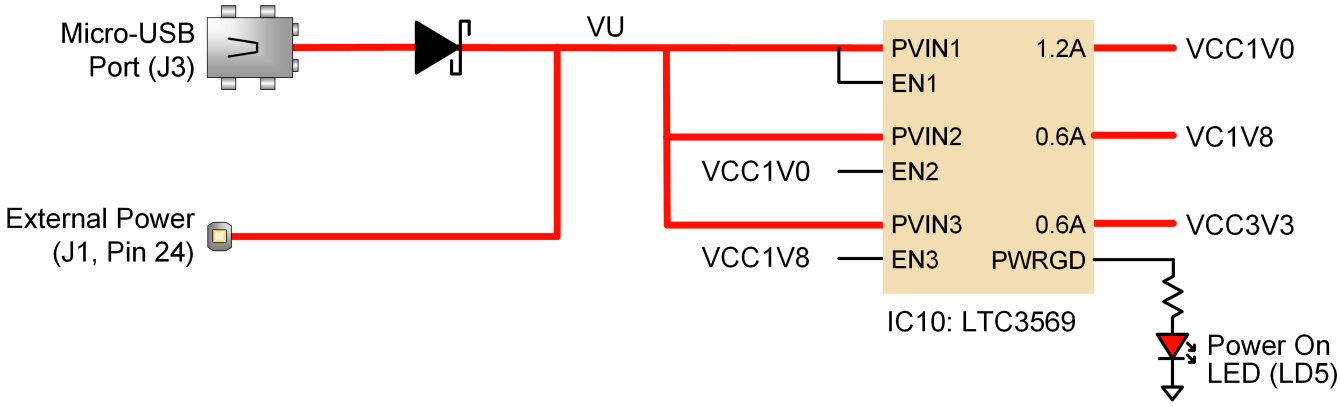

Figure 1. Cmod A7 Power Supply (from Digilent Reference Manual)

2. Power Input Options

The board can be powered from either of the following sources:

Source	Connector	Schematic Net	Min Voltage	Recommended	Max Voltage
USB	J3 (Micro-USB)	USB5V0	4.5 V	5.0 V	5.5 V
External Supply	J1 Pin 24 (DIP)	VU	3.32 V*	5.0 V	5.5 V

> * The minimum external voltage on VU depends on the current drawn from the VCC3V3 rail via the Pmod header:
>
> - 0 mA drawn → minimum 3.32 V
> - 100 mA drawn → minimum 3.38 V
> - 250 mA drawn → minimum 3.48 V

GND reference is on **J1 Pin 25**.

3. Output Power Rails

All three rails are generated by the LTC3569 from the VU input.

Rail	Typical Voltage	Min / Max Voltage	Max Current	Powered Devices
VCC1V0	1.00 V	0.95 V / 1.05 V	1.2 A	FPGA Core, Block RAM

Rail	Typical Voltage	Min / Max Voltage	Max Current	Powered Devices
VCC1V8	1.80 V	1.71 V / 1.89 V	0.6 A	FPGA AUX, ADC, USB Core
VCC3V3	3.30 V	3.135 V / 3.465 V	0.6 A	SRAM, USB Controller, Pmod, LEDs, Buttons, FPGA User I/O

Power-Up Sequence

The LTC3569 enable pins are daisy-chained to enforce a sequential startup:

1. **VCC1V0** starts first (EN1 tied high)
2. **VCC1V8** starts after VCC1V0 is stable (EN2 driven by VCC1V0)
3. **VCC3V3** starts after VCC1V8 is stable (EN3 driven by VCC1V8)

The **PWRGD** (Power Good) output drives the Power On LED (LD5).

---

4. VU Pin Behavior

Condition	VU Pin Function
USB connected	VU is an **output** — driven by USB 5V through a Schottky diode (expect ~5 V with small drop)
USB not connected	VU is an **input** — accepts external power supply (3.32–5.5 V)

---

5. Dual Power Source (USB + External)

It is possible to power the board from both USB and VU simultaneously, **but only if a Schottky diode is added in series with the external supply on the VU pin** to prevent current backflow.

Without the additional diode, **do not connect both sources at the same time**.

---

6. Warnings

- When a USB host is attached, the VU pin is driven to USB voltage (4.5–5.5 V). Any external power source on VU **must be disconnected first** before plugging in USB, or the external supply may be damaged.
- This is **especially dangerous with battery power sources**, as batteries cannot tolerate reverse current.
- The FPGA I/O pins on the DIP connector have **no series resistors**. Do not exceed the absolute maximum voltage ratings specified in the Artix-7 datasheet.

---

7. Quick Reference for External Power Design

Parameter	Value
Input Connector	J1 Pin 24 (VU) + Pin 25 (GND)
Recommended Input Voltage	5.0 V
Acceptable Input Range	3.32 – 5.5 V
Total Max Current (all rails)	~2.4 A (1.2 + 0.6 + 0.6)
Power Good Indicator	LD5 (LED)
Regulator IC	LTC3569
Protection Required for Dual Supply	Schottky diode in series with VU