Cmod A7-35T Pin Specification

1. DIP Connector Overview

The Cmod A7-35T has a 48-pin DIP connector (J1). All digital I/O pins operate at **LVCMOS33** (3.3 V logic level) with **no series resistors**.

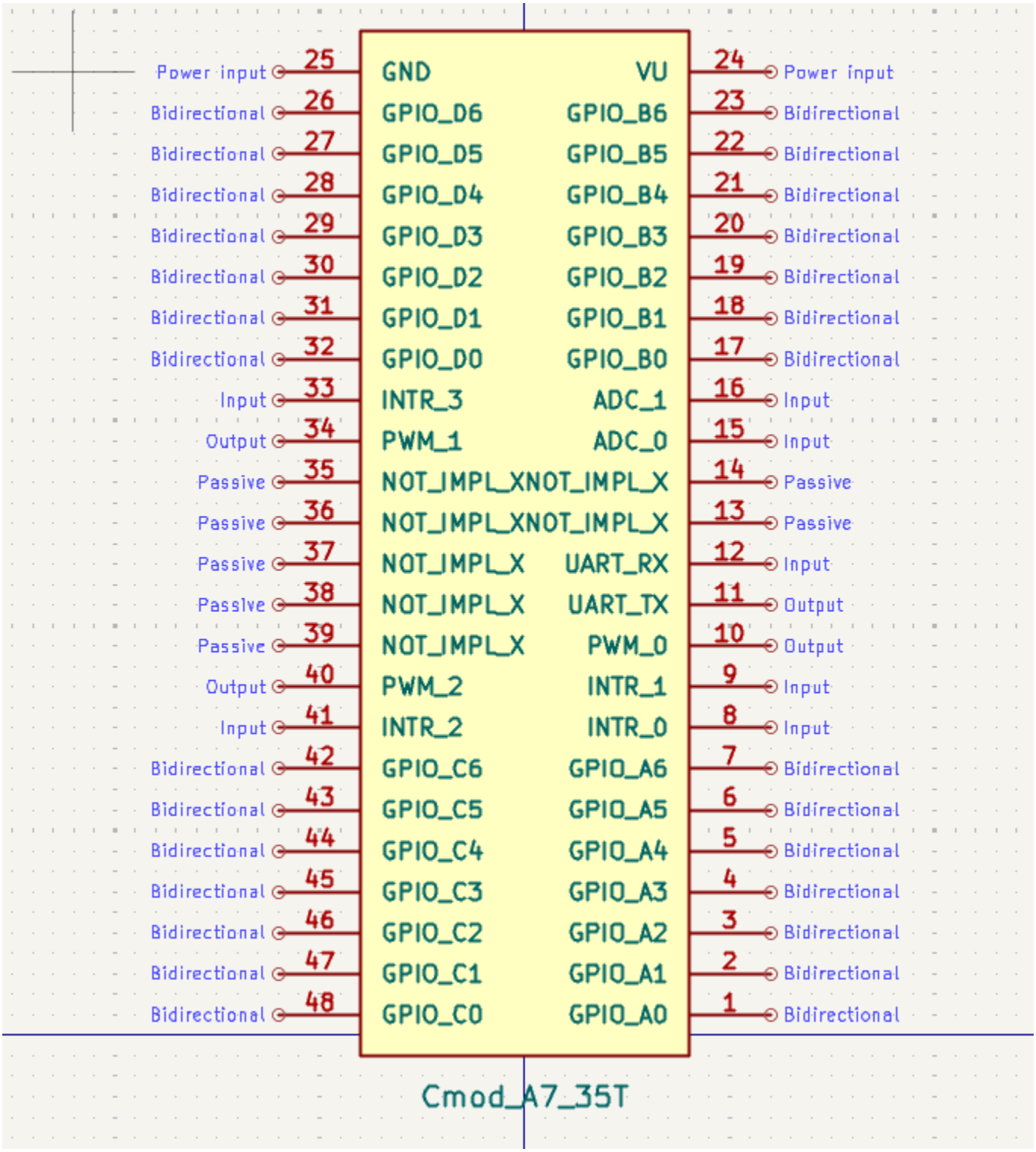

Figure 1. U1 Cmod A7-35T DIP Pinout (custom schematic symbol)

Category	Count

Category	Count
GPIO (4 groups × 7-bit)	28
External Interrupts	4
PWM Outputs	3
UART 1 (TX + RX)	2
Analog Inputs (XADC)	2
Not Implemented	7
Power (VU + GND)	2
Total	**48**

---

2. Pin Map — Left Side (Pin 1–24)

DIP Pin	Signal Name	FPGA Pin	Direction	Function
1	GPIO_A0	M3	I/O	General purpose GPIO, Group A bit 0
2	GPIO_A1	L3	I/O	General purpose GPIO, Group A bit 1
3	GPIO_A2	A16	I/O	General purpose GPIO, Group A bit 2
4	GPIO_A3	K3	I/O	General purpose GPIO, Group A bit 3
5	GPIO_A4	C15	I/O	General purpose GPIO, Group A bit 4
6	GPIO_A5	H1	I/O	General purpose GPIO, Group A bit 5
7	GPIO_A6	A15	I/O	General purpose GPIO, Group A bit 6
8	INTR_0	B15	Input	External interrupt input 0
9	INTR_1	A14	Input	External interrupt input 1
10	PWM_0	J3	Output	PWM output channel 0 (axi_timer)
11	UART_TX	J1	Output	UART 1 transmit
12	UART_RX	K2	Input	UART 1 receive
13	NOT_IMPL	L1	—	Not implemented (pio[13])
14	NOT_IMPL	L2	—	Not implemented (pio[14])
15	ADC_0	G3 / G2	Analog	XADC VAUX4 (ain_p[15] / ain_n[15])
16	ADC_1	H2 / J2	Analog	XADC VAUX12 (ain_p[16] / ain_n[16])
17	GPIO_B0	M1	I/O	General purpose GPIO, Group B bit 0
18	GPIO_B1	N3	I/O	General purpose GPIO, Group B bit 1
19	GPIO_B2	P3	I/O	General purpose GPIO, Group B bit 2

DIP Pin	Signal Name	FPGA Pin	Direction	Function
20	GPIO_B3	M2	I/O	General purpose GPIO, Group B bit 3
21	GPIO_B4	N1	I/O	General purpose GPIO, Group B bit 4
22	GPIO_B5	N2	I/O	General purpose GPIO, Group B bit 5
23	GPIO_B6	P1	I/O	General purpose GPIO, Group B bit 6
24	**VU**	—	Power	Power input (ext) / Power output (USB)

3. Pin Map — Right Side (Pin 25–48)

DIP Pin	Signal Name	FPGA Pin	Direction	Function
25	**GND**	—	Power	Ground reference
26	GPIO_D6	W2	I/O	General purpose GPIO, Group D bit 6
27	GPIO_D5	U1	I/O	General purpose GPIO, Group D bit 5
28	GPIO_D4	T2	I/O	General purpose GPIO, Group D bit 4
29	GPIO_D3	T1	I/O	General purpose GPIO, Group D bit 3
30	GPIO_D2	R2	I/O	General purpose GPIO, Group D bit 2
31	GPIO_D1	T3	I/O	General purpose GPIO, Group D bit 1
32	GPIO_D0	R3	I/O	General purpose GPIO, Group D bit 0
33	INTR_3	V2	Input	External interrupt input 3
34	PWM_1	W3	Output	PWM output channel 1 (axi_timer)
35	NOT_IMPL	V3	—	Not implemented (pio[35])
36	NOT_IMPL	W5	—	Not implemented (pio[36])
37	NOT_IMPL	V4	—	Not implemented (pio[37])
38	NOT_IMPL	U4	—	Not implemented (pio[38])
39	NOT_IMPL	V5	—	Not implemented (pio[39])
40	PWM_2	W4	Output	PWM output channel 2 (axi_timer)
41	INTR_2	U5	Input	External interrupt input 2
42	GPIO_C6	U2	I/O	General purpose GPIO, Group C bit 6
43	GPIO_C5	W6	I/O	General purpose GPIO, Group C bit 5
44	GPIO_C4	U3	I/O	General purpose GPIO, Group C bit 4
45	GPIO_C3	U7	I/O	General purpose GPIO, Group C bit 3
46	GPIO_C2	W7	I/O	General purpose GPIO, Group C bit 2

DIP Pin	Signal Name	FPGA Pin	Direction	Function
47	GPIO_C1	U8	I/O	General purpose GPIO, Group C bit 1
48	GPIO_C0	V8	I/O	General purpose GPIO, Group C bit 0

4. GPIO Groups — AXI Address Map

Each GPIO group is controlled by an AXI GPIO IP instance accessible from the MicroBlaze RISC-V processor.

Group	Width	AXI Base Address	HDL Port Name	DIP Pins
A	7-bit	0x4003_0000	`gpio_A_tri_io[6:0]`	1–7
B	7-bit	0x4004_0000	`gpio_B_tri_io[6:0]`	17–23
C	7-bit	0x4005_0000	`gpio_C_tri_io[6:0]`	42–48
D	7-bit	0x4006_0000	`gpio_D_tri_io[6:0]`	26–32

5. Interrupt Inputs — AXI Address Map

Signal	DIP Pin	FPGA Pin	AXI Base Address	HDL Port Name
INTR_0	8	B15	0x4007_0000	`intr_tri_i[0]`
INTR_1	9	A14	0x4007_0000	`intr_tri_i[1]`
INTR_2	41	U5	0x4007_0000	`intr_tri_i[2]`
INTR_3	33	V2	0x4007_0000	`intr_tri_i[3]`

All 4 interrupts are grouped into a single 4-bit AXI GPIO instance (INT_0_3) with interrupt capability enabled (`C_INTERRUPT_PRESENT = 1`).

6. PWM Outputs — AXI Address Map

Signal	DIP Pin	FPGA Pin	AXI Base Address	IP Instance
PWM_0	10	J3	0x41C1_0000	PWM_0 (axi_timer)
PWM_1	34	W3	0x41C2_0000	PWM1 (axi_timer)
PWM_2	40	W4	0x41C3_0000	PWM_2 (axi_timer)

7. UART Interfaces

Interface	TX Pin	RX Pin	TX FPGA	RX FPGA	AXI Base Address	Connection

Interface	TX Pin	RX Pin	TX FPGA	RX FPGA	AXI Base Address	Connection
UART 0 (USB)	J18	J17	J18	J17	0x44A0_0000	Via Micro-USB (J3), no DIP pin
UART 1 (External)	DIP 11	DIP 12	J1	K2	0x44A1_0000	Exposed on DIP connector

Both are AXI UART16550 instances (16550-compatible).

---

8. Analog Inputs (XADC)

Signal	DIP Pin	FPGA Pin (P/N)	XADC Channel
ADC_0	15	G3 / G2	VAUX4
ADC_1	16	H2 / J2	VAUX12

XADC AXI base address: **0x44A3_0000**. The sequencer also monitors on-chip temperature, VCCINT, and VCCAUX.

Analog Input Circuit

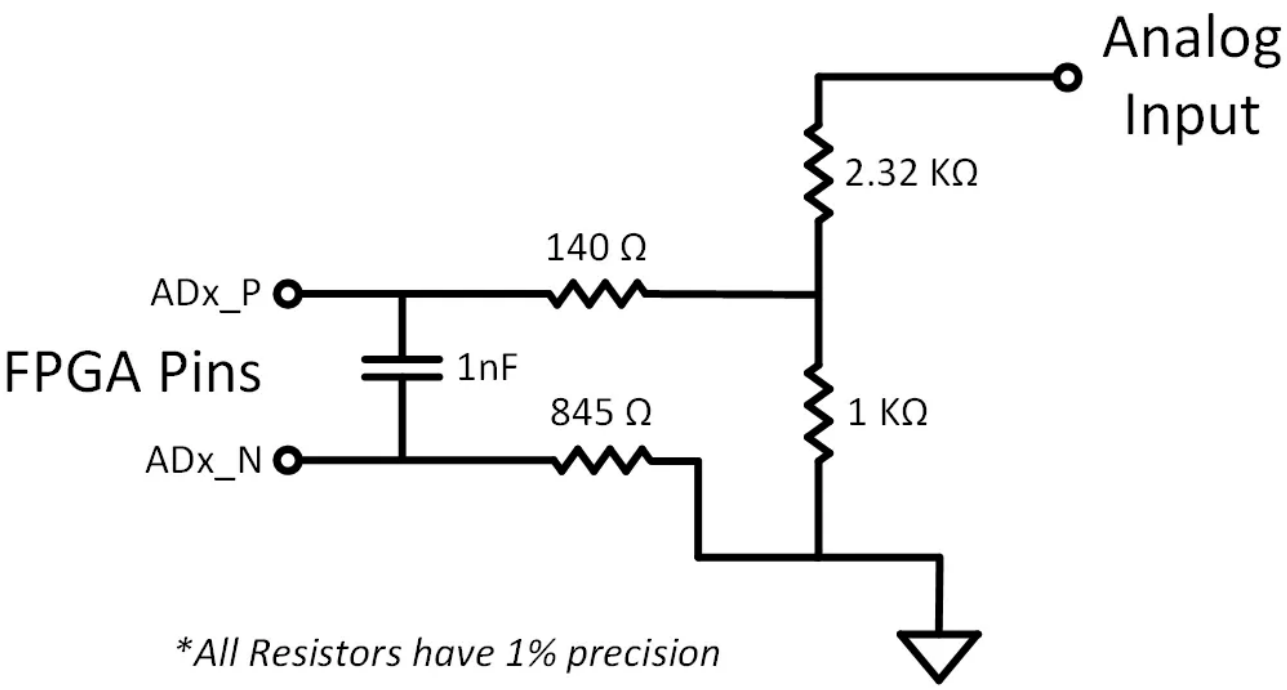

Figure 2. On-board voltage divider circuit for XADC analog inputs (from Digilent Reference Manual)

The XADC expects an input range of 0–1 V. The board includes a resistive voltage divider (2.32 KΩ / 1 KΩ, all 1% precision) that scales the DIP pin voltage down to the FPGA's acceptable range. A 140 Ω series resistor and 1 nF capacitor are placed on the differential pair for filtering. The ADx_N path has an 845 Ω series resistor.

Parameter	Value
Max input voltage on DIP pin 15/16	**3.3 V** (relative to GND on pin 25)
Voltage at FPGA after divider	0–1 V
Divider ratio	1 KΩ / (2.32 KΩ + 1 KΩ) ≈ 0.301
Resistor tolerance	1%

> **Note:** Pins 15 and 16 are routed through on-board voltage dividers. If used as analog inputs, they must **not** be assigned as digital I/O in the constraints file. Do not exceed 3.3 V on these pins.

---

9. Not Implemented Pins

These FPGA pins are physically connected to the DIP header but not assigned in the current design. They are available for future use.

DIP Pin	FPGA Pin	Digilent Schematic Name
13	L1	pio[13]
14	L2	pio[14]
35	V3	pio[35]
36	W5	pio[36]
37	V4	pio[37]
38	U4	pio[38]
39	V5	pio[39]

---

10. Internal Peripherals (No DIP Pin Exposure)

Peripheral	AXI Base Address	Description
Board LEDs	0x4000_0000	2-bit on-board LEDs (FPGA: A17, C16)
Board Button	0x4001_0000	1-bit push button (FPGA: A18)
Board RGB LED	0x4002_0000	On-board RGB LED (FPGA: B17, B16, C17)
Timer 0	0x41C0_0000	System timer with interrupt
Timer 1	0x41C4_0000	System timer with interrupt
Timer 2	0x41C5_0000	System timer with interrupt
AXI Interrupt Controller	0x4120_0000	6 interrupt sources
QSPI Flash	0x44A2_0000	On-board Quad-SPI flash
SRAM (EMC)	0x6000_0000	512 KB cellular RAM (32 MB address range)

---

11. Electrical Characteristics

Parameter	Value
I/O Standard	LVCMOS33 (3.3 V)
Series Resistance on DIP Pins	None
Max Input Voltage (digital I/O)	See Artix-7 datasheet (~3.75 V abs. max for LVCMOS33)
Analog Input Range (Pin 15, 16)	0–1 V (via on-board voltage divider)
Clock Source	12 MHz oscillator (FPGA pin L17), PLL → 100 MHz