National Cheng Kung University

RISC-V Microcontroller

Developed by Wei-Feng Huang, DICLAB, NCKU

Microcontroller Selection

成功大學
COPYRIGHT 2002 NATIONAL CHENG KUNG UNIVERSITY

- E203
  - RV32IM ISA with interrupt and exception support
  - Developed by Nuclei System Technology (China)
  - FreeRTOS support available
- MicroBlaze V
  - Xilinx
  - Configurable ISA with interrupt and exception support
  - JTAG support available
  - FreeRTOS support planned for 2026
  - Strong toolchain support (Vivado/Vitis integration, beginner-friendly)
- DICLAB's CPU (developing)
  - RV32IMB ISA with interrupt and exception support
  - FreeRTOS support targeted

MicroBlaze V high-end Peripheral

成功大學
COPYRIGHT 2002 NATIONAL CHENG KUNG UNIVERSITY

General Purpose

- Multichannel DMA
- Streaming FIFO
- Timer / Watchdog
- Mutex / Mailbox

I/O

- UART
- USB 2.0
- SPI
- GPIO
- PWM

Video

- HDMI Camera/Display Interface
- MIPI-CSI, MIPI-DSI
- Video DMA

Memory

- DDR
- Quad SPI
- SDRAM

Networking

- Ethernet Subsystem
- Controller Area Network

- External I/O is FPGA-configurable via GPIO ports.
- Onboard switches/LEDs/buttons are also supported.
- The right figure shows a Xilinx MicroBlaze V microcontroller reference design example.

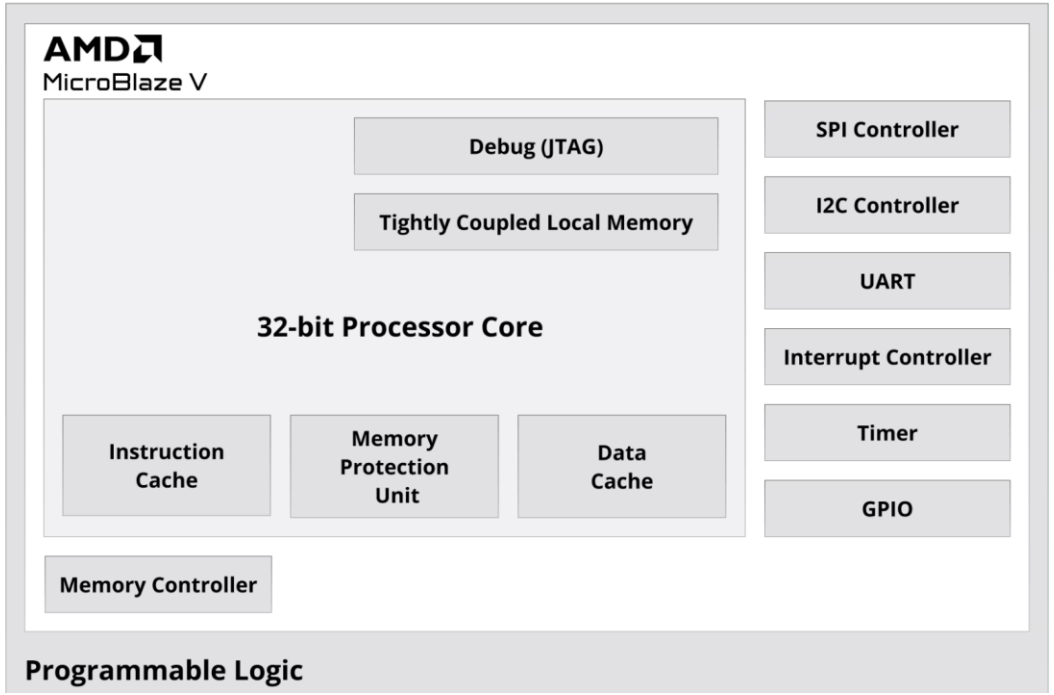

Our Microcontroller (temporary)

成功大學
COPYRIGHT 2002 NATIONAL CHENG KUNG UNIVERSITY

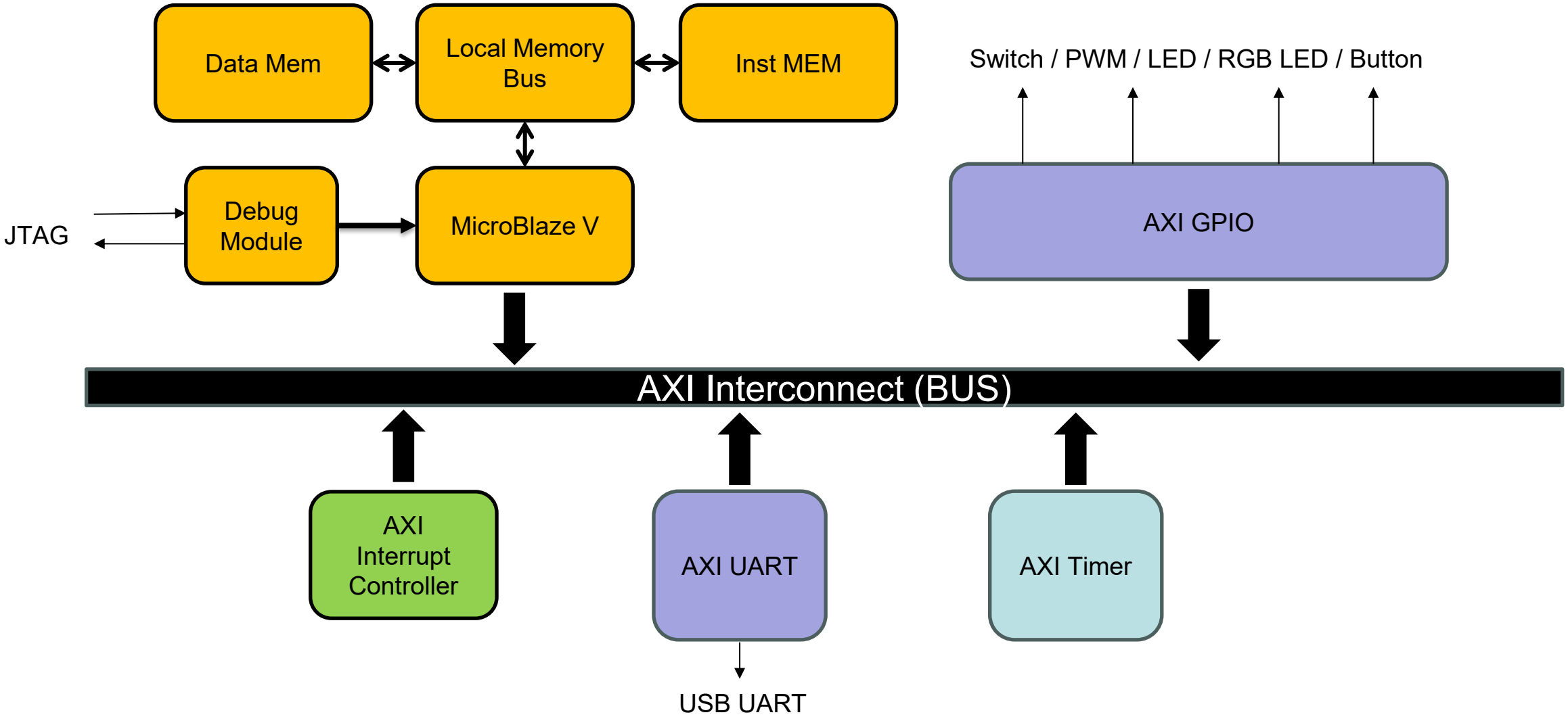

Block Design

成功大學
COPYRIGHT 2002 NATIONAL CHENG KUNG UNIVERSITY

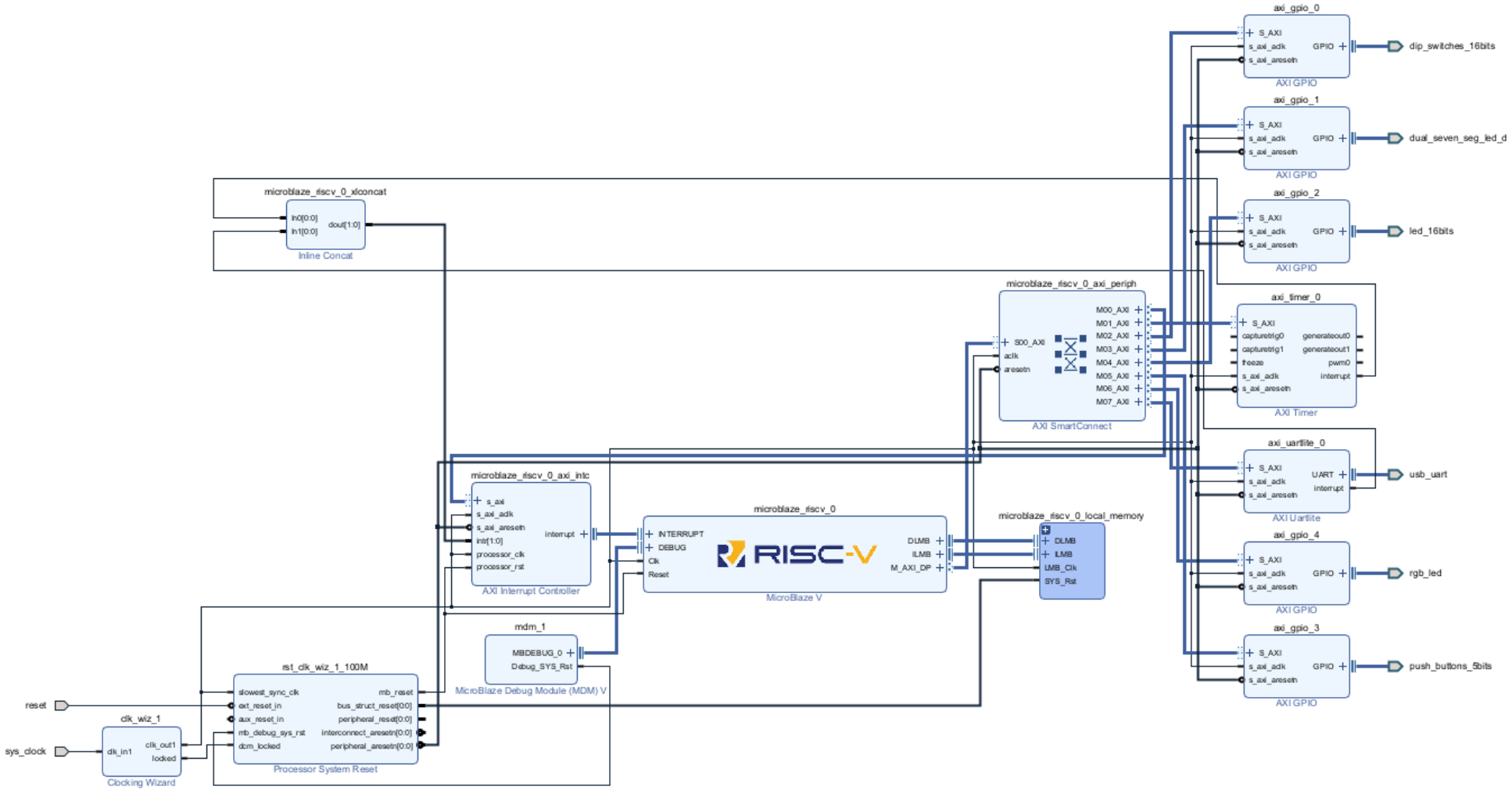

Memory-Mapped I/O vs SFR

成功大學
COPYRIGHT 2002 NATIONAL CHENG KUNG UNIVERSITY

- Memory-Mapped I/O (MMIO):
  - Peripherals are mapped into the memory address space
  - Accessed using normal load/store instructions
  - Easy to integrate and extend (add new devices by assigning new addresses)

- SFR (Special Function Registers) in traditional MCUs (e.g., PIC):
  - Peripheral control uses dedicated special registers
  - Often requires bank selection / bit-level control
  - Less flexible when scaling to more peripherals

Memory Map in our microcontroller

成功大學
COPYRIGHT 2002 NATIONAL CHENG KUNG UNIVERSITY

Name	Interface	Slave Segment	Master Base Address	Range	Master High Address
Network 0 (/microblaze_riscv_0/Data)					
/microblaze_riscv_0					
/microblaze_riscv_0/Data (32 address bits : 4G)					
/axi_gpio_0/S_AXI	S_AXI	Reg	0x4000_0000	64K	0x4000_FFFF
/axi_gpio_1/S_AXI	S_AXI	Reg	0x4001_0000	64K	0x4001_FFFF
/axi_gpio_2/S_AXI	S_AXI	Reg	0x4002_0000	64K	0x4002_FFFF
/axi_gpio_3/S_AXI	S_AXI	Reg	0x4003_0000	64K	0x4003_FFFF
/axi_gpio_4/S_AXI	S_AXI	Reg	0x4004_0000	64K	0x4004_FFFF
/axi_timer_0/S_AXI	S_AXI	Reg	0x41C0_0000	64K	0x41C0_FFFF
/axi_uartlite_0/S_AXI	S_AXI	Reg	0x4060_0000	64K	0x4060_FFFF
/microblaze_riscv_0_axi_intc/S_AXI	s_axi	Reg	0x4120_0000	64K	0x4120_FFFF
/microblaze_riscv_0_local_memory/dlmb_bram_if_cntlr/S	SLMB	Mem	0x0	64K	0xFFFF
Network 1 (/microblaze_riscv_0/Instruction)					
/microblaze_riscv_0					
/microblaze_riscv_0/Instruction (32 address bits : 4G)					
/microblaze_riscv_0_local_memory/ilmb_bram_if_cntlr/S	SLMB	Mem	0x0	64K	0xFFFF

Registers

There are four internal registers in the AXI GPIO design as shown in Table 4. The memory map of the AXI GPIO design is determined by setting the C_BASEADDR parameter. The internal registers of the AXI GPIO are at a fixed offset from the base address and are byte accessible.

Table 4: **Registers**

Base Address + Offset (hex)	Register Name	Access Type	Default Value (hex)	Description
C_BASEADDR + 0x00	GPIO_DATA	Read/Write	0x0	Channel 1 AXI GPIO Data Register
C_BASEADDR + 0x04	GPIO_TRI	Read/Write	0x0	Channel 1 AXI GPIO 3-state Register
C_BASEADDR + 0x08	GPIO2_DATA	Read/Write	0x0	Channel 2 AXI GPIO Data Register
C_BASEADDR + 0x0C	GPIO2_TRI	Read/Write	0x0	Channel 2 AXI GPIO 3-state Register

- Each mapped IP provides its own datasheet / product guide.
- The document specifies the internal register map (offsets from the base address) and explains how to use each register for configuration and I/O control.

Memory Architecture

成功大學
COPYRIGHT 2002 NATIONAL CHENG KUNG UNIVERSITY

CPU internal (MicroBlaze core):

MicroBlaze uses a Harvard-style internal structure, with separate instruction and data paths.

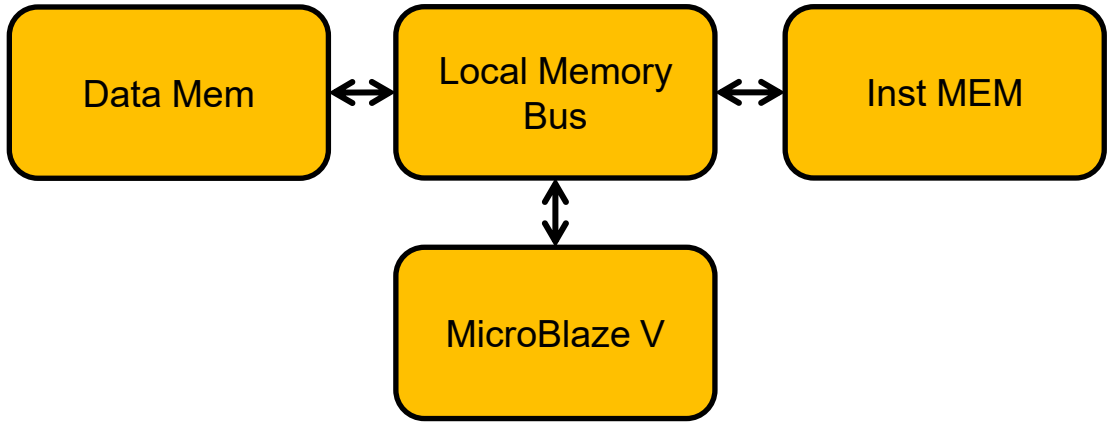

Modified Harvard Architecture

SOC Level:

The overall system looks more like a **von Neumann model**, because both instructions and data are placed in a **single unified memory address space** when accessing external memory and memory-mapped peripherals.

AXI Mapping

成功大學
COPYRIGHT 2002 NATIONAL CHENG KUNG UNIVERSITY

- Although each peripheral is mapped to a memory address range, this address region does not correspond to physical RAM.

- Instead, AXI address decoding and routing logic forwards these transactions to the target peripheral's register interface (MMIO).

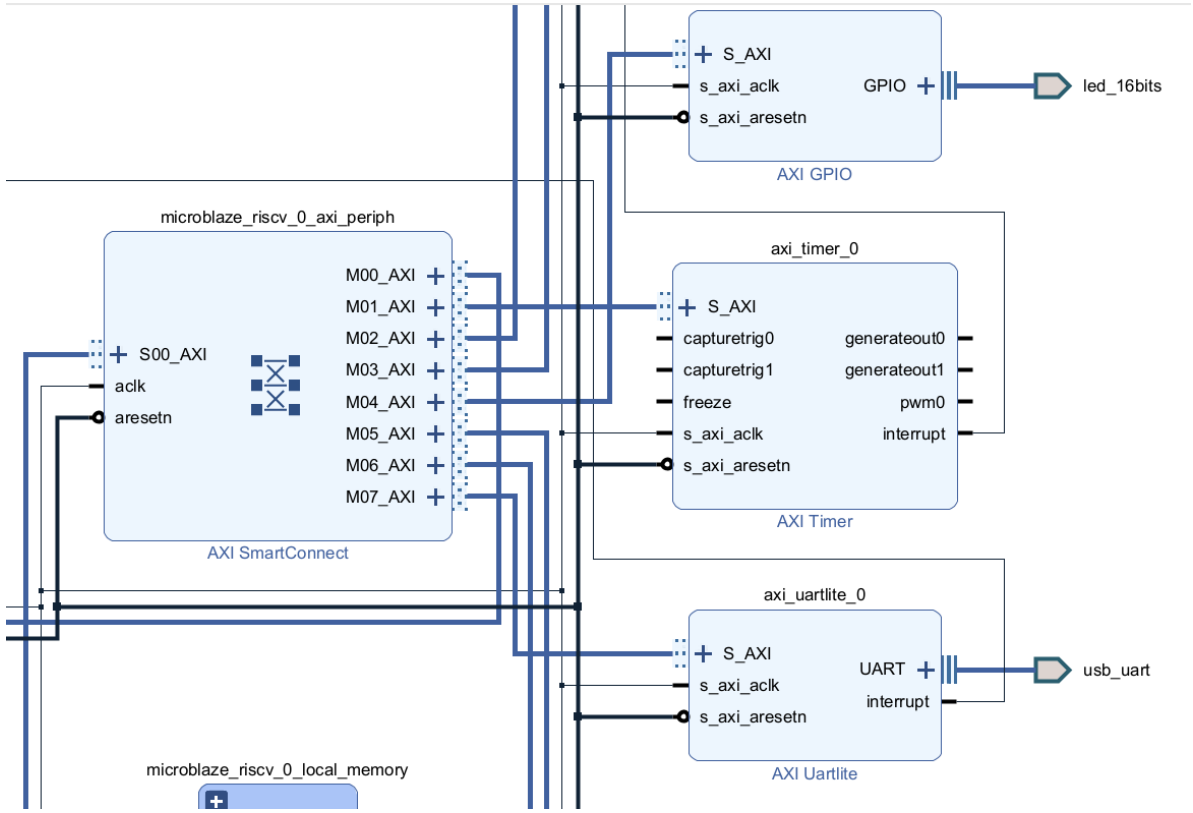

Resource Utilization

成功大學
COPYRIGHT 2002 NATIONAL CHENG KUNG UNIVERSITY

Resource	Utilization	Available	Utilization %
LUT	4117	63400	6.49
LUTRAM	139	19000	0.73
FF	3621	126800	2.86
BRAM	16	135	11.85
DSP	4	240	1.67
IO	55	210	26.19
BUFG	6	32	18.75
MMCM	1	6	16.67

Spartan-7 FPGAs

		I/O Optimization at the Lowest Cost and Highest Performance-per-Watt (1.0V, 0.95V)					
	Part Number	XC7S6	XC7S15	XC7S25	XC7S50	XC7S75	XC7S100
Logic Resources	Logic Cells	6,000	12,800	23,360	52,160	76,800	102,400
	Slices	938	2,000	3,650	8,150	12,000	16,000
	CLB Flip-Flops	7,500	16,000	29,200	65,200	96,000	128,000
Memory Resources	Max. Distributed RAM (Kb)	70	150	313	600	832	1,100
	Block RAM/FIFO w/ ECC (36 Kb each)	5	10	45	75	90	120
	Total Block RAM (Kb)	180	360	1,620	2,700	3,240	4,320
Clock Resources	Clock Mgmt Tiles (1 MMCM + 1 PLL)	2	2	3	5	8	8
I/O Resources	Max. Single-Ended I/O Pins	100	100	150	250	400	400
	Max. Differential I/O Pairs	48	48	72	120	192	192
Embedded Hard IP Resources	DSP Slices	10	20	80	120	140	160
	Analog Mixed Signal (AMS) / XADC	0	0	1	1	1	1
	Configuration AES / HMAC Blocks	0	0	1	1	1	1
Speed Grades	Commercial Temp (C)	-1,-2	-1,-2	-1,-2	-1,-2	-1,-2	-1,-2
	Industrial Temp (I)	-1,-2,-1L	-1,-2,-1L	-1,-2,-1L	-1,-2,-1L	-1,-2,-1L	-1,-2,-1L
	Expanded Temp (Q)	-1	-1	-1	-1	-1	-1

=1.6 * LUT

Tool Chain

成功大學
COPYRIGHT 2002 NATIONAL CHENG KUNG UNIVERSITY

- Vivado for FPGA Design (RTL → Bitstream)
- Vitis for Software Development (C/C++ → ELF)

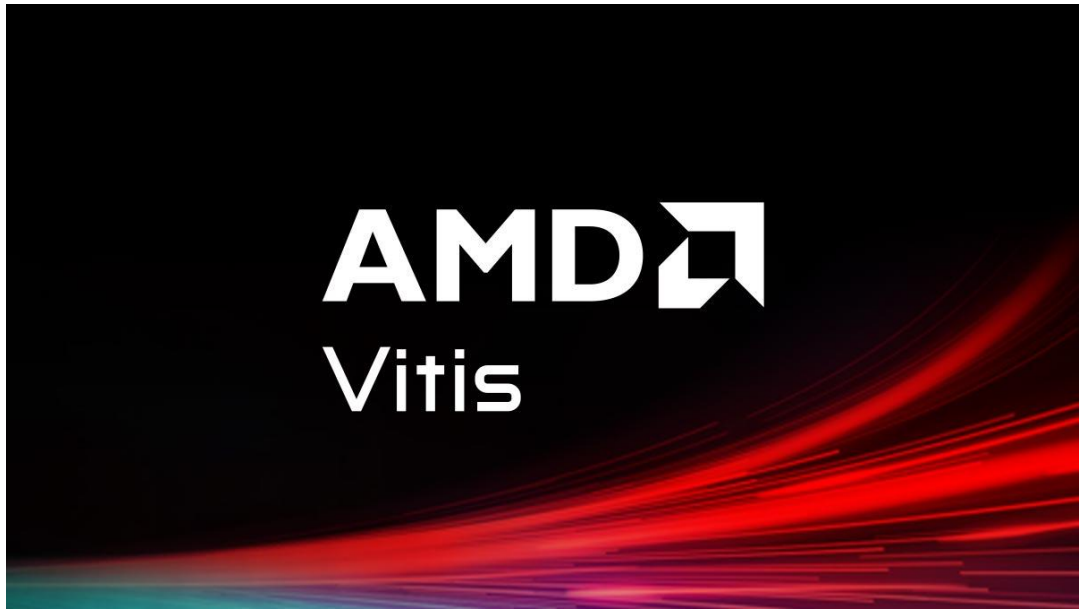

Design Flow

COPYRIGHT 2002 NATIONAL CHENG KUNG UNIVERSITY

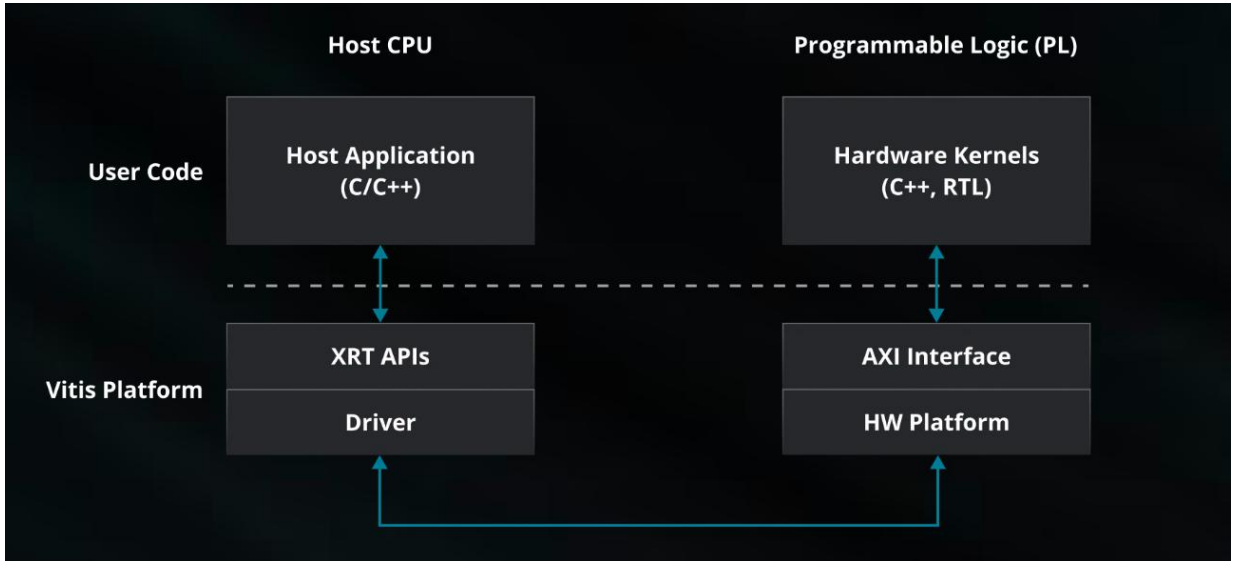

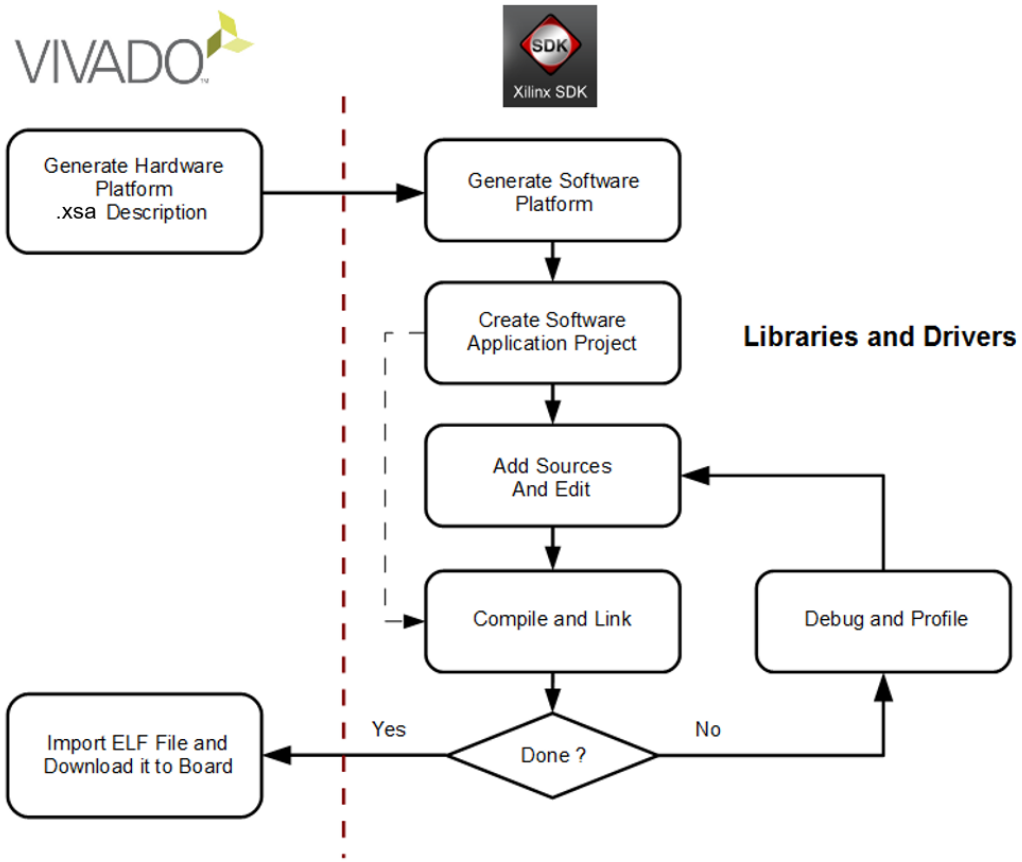

Program to FPGA and Debug - XSDB (via JTAG)

成功大學
COPYRIGHT 2002 NATIONAL CHENG KUNG UNIVERSITY

- XSDB (Xilinx System Debugger) communicates with the target board through JTAG (IEEE 1149.1), a standard interface for device programming and hardware debugging.
- It uses the MicroBlaze Debug Module (MDM) to halt/reset the CPU and access system memory.
- XSDB then downloads the .elf sections (e.g. .text, .data) into on-chip BRAM according to the ELF memory map.
- Finally, XSDB sets the program entry point (PC) and starts CPU execution.

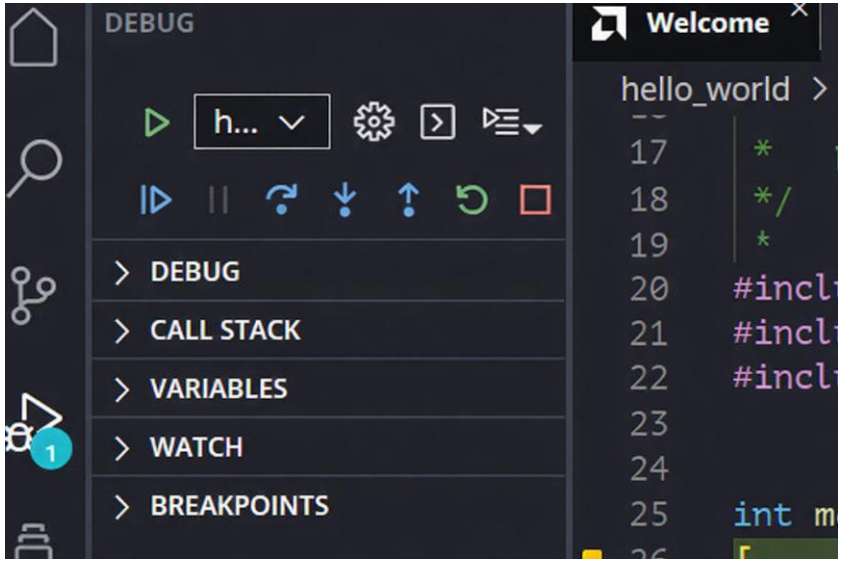

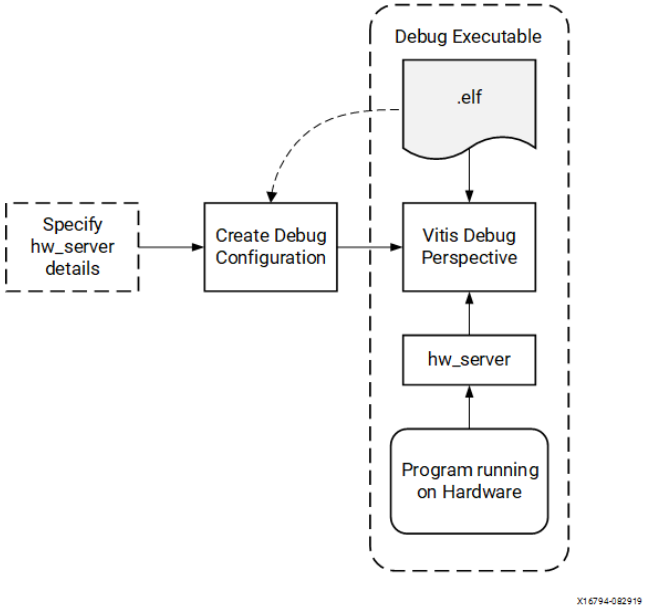

Software Template

成功大學
COPYRIGHT 2002 NATIONAL CHENG KUNG UNIVERSITY

- Dhystone
- Peripheral Test
- UART Test
- Monte Carlo
- Interrupt Service Routine

```
Microseconds for one run through Dhrystone: 10.9000
Dhrystones per Second:                      91743.0656
DMIPS/Sec:                                  52.2157
DMIPS/MHz:                                  0.5222

The Dhrystone App has run successfully
```

- **MicroBlaze V** (single-core) measured **0.522 DMIPS/MHz**.
- **Cortex-A9** (dual-core, hard-core) is commonly reported around **~2.5 DMIPS/MHz per core**, but in some practical cases it can drop to **~1.0 DMIPS/MHz** depending on memory/cache and system configuration.

Ripes

成功大學
COPYRIGHT 2002 NATIONAL CHENG KUNG UNIVERSITY

Ripes

File Edit View Help

1 ms

Editor
Processor
Cache
Memory
I/O

Source code

Input type: Assembly C Executable code

View mode: Binary Disassembled

Current input source: Executable (ELF)

File: /tmp/Ripes.aibzpC

Note: Enabling the editor will clear any currently loaded program from the simulator

Enable editor

```
10318:  fcf42e23  sw x15 -36 x8
1031c:  000137b7  lui x15 0x13
10320:  9e87a783  lw x15 -1560 x15
10324:  fcf42623  sw x15 -52 x8
10328:  000137b7  lui x15 0x13
1032c:  9ec7a783  lw x15 -1556 x15
10330:  fcf42423  sw x15 -56 x8
10334:  06400793  addi x15 x0 100
10338:  fcf42223  sw x15 -60 x8
1033c:  00100793  addi x15 x0 1
10340:  fcf42823  sw x15 -48 x8
10344:  1640006f  jal x0 356
10348:  000137b7  lui x15 0x13
1034c:  9c878513  addi x10 x15 -1592
10350:  e61ff0ef  jal x1 -416 <printString>
10354:  fd042503  lw x10 -48 x8
10358:  e29ff0ef  jal x1 -472 <printInt>
1035c:  000137b7  lui x15 0x13
10360:  9b078513  addi x10 x15 -1616
10364:  e4dff0ef  jal x1 -436 <printString>
10368:  fd442703  lw x14 -44 x8
1036c:  000077b7  lui x15 0x7
10370:  bdb78793  addi x15 x15 -1061
10374:  02f707b3  mul x15 x14 x15
10378:  faf42e23  sw x15 -68 x8
1037c:  fbc42703  lw x14 -68 x8
10380:  000127b7  lui x15 0x12
10384:  28f78793  addi x15 x15 655          WB
10388:  02f767b3  rem x15 x14 x15           MEM
1038c:  fcf42a23  sw x15 -44 x8             EX
10390:  fd442503  lw x10 -44 x8             ID
10394:  655010ef  jal x1 7764 <__floatsisf> IF
```

Console Memory

Console

```
Running RanPI...
        Iteration: 1
```

gpr

Name	Alias	Value
x0	zero	0x00000000
x1	ra	0x00010368
x2	sp	0x7fffff80
x3	gp	0x00013810
x4	tp	0x00000000
x5	t0	0x000100ac
x6	t1	0x0000000f
x7	t2	0x00000000
x8	s0	0x7ffffff0
x9	s1	0x00000000
x10	a0	0x000129b0
x11	a1	0x7ffffff4
x12	a2	0x00000000
x13	a3	0x00000000
x14	a4	0x03237061
x15	a5	0x00012000
x16	a6	0x00000000
x17	a7	0x00000004
x18	s2	0x00000000
x19	s3	0x00000000
x20	s4	0x00000000
x21	s5	0x00000000
x22	s6	0x00000000
x23	s7	0x00000000
x24	s8	0x00000000
x25	s9	0x00000000
x26	s10	0x00000000

Display type: Hex

Processor: 5-stage processor ISA: RV32IMC

Ripes

成功大學
COPYRIGHT 2002 NATIONAL CHENG KUNG UNIVERSITY

Ripes

File Edit View Help

1 ms

Editor
Processor
Cache
Memory
I/O

Memory viewer

Address	Word	Byte 0	Byte 1	Byte 2	Byte 3
0x00000084	0x00013444	0x44	0x34	0x01	0x00
0x00000080	0x00000000	0x00	0x00	0x00	0x00
0x0000007c	0x00070003	0x03	0x00	0x07	0x00
0x00000078	0x00000000	0x00	0x00	0x00	0x00
0x00000074	0x00013438	0x38	0x34	0x01	0x00
0x00000070	0x00000000	0x00	0x00	0x00	0x00
0x0000006c	0x00060003	0x03	0x00	0x06	0x00
0x00000068	0x00000000	0x00	0x00	0x00	0x00
0x00000064	0x00013010	0x10	0x30	0x01	0x00
0x00000060	0x00000000	0x00	0x00	0x00	0x00
0x0000005c	0x00050003	0x03	0x00	0x05	0x00
0x00000058	0x00000000	0x00	0x00	0x00	0x00
0x00000054	0x0001300c	0x0c	0x30	0x01	0x00
0x00000050	0x00000000	0x00	0x00	0x00	0x00
0x0000004c	0x00040003	0x03	0x00	0x04	0x00
0x00000048	0x00000000	0x00	0x00	0x00	0x00
0x00000044	0x00013004	0x04	0x30	0x01	0x00
0x00000040	0x00000000	0x00	0x00	0x00	0x00
0x0000003c	0x00030003	0x03	0x00	0x03	0x00
0x00000038	0x00000000	0x00	0x00	0x00	0x00
0x00000034	0x00013000	0x00	0x30	0x01	0x00
0x00000030	0x00000000	0x00	0x00	0x00	0x00
0x0000002c	0x00020003	0x03	0x00	0x02	0x00
0x00000028	0x00000000	0x00	0x00	0x00	0x00
0x00000024	0x000129b0	0xb0	0x29	0x01	0x00
0x00000020	0x00000000	0x00	0x00	0x00	0x00
0x0000001c	0x00010003	0x03	0x00	0x01	0x00

Display type: Hex Go to register: Go to section:

Memory map

Name	Size	Range
.symtab	1632	0x00000000 - 0x0000065f
.text	10552	0x00010074 - 0x000129ab
.rodata	576	0x000129b0 - 0x00012bef
.eh_frame	4	0x00013000 - 0x00013003
.init_array	8	0x00013004 - 0x0001300b
.fini_array	4	0x0001300c - 0x0001300f
.data	1064	0x00013010 - 0x00013437
.sdata	12	0x00013438 - 0x00013443
.bss	0	0x00013444 - 0x00013443

Processor: 5-stage processor ISA: RV32IMC

Issues to Address

成功大學
COPYRIGHT 2002 NATIONAL CHENG KUNG UNIVERSITY

i. Full Assembly Boot Chain in Vitis (How to Implement)
   a. start.S : reset entry + stack + jump
   b. main.S : your main logic (or C main if mixed mode)
   c. lscript.ld : defines memory regions & entry address

ii. FPGA Board Selection
   a. Spartan-series without DDR FPGA boards
   b. Xilinx part number ≤ 35

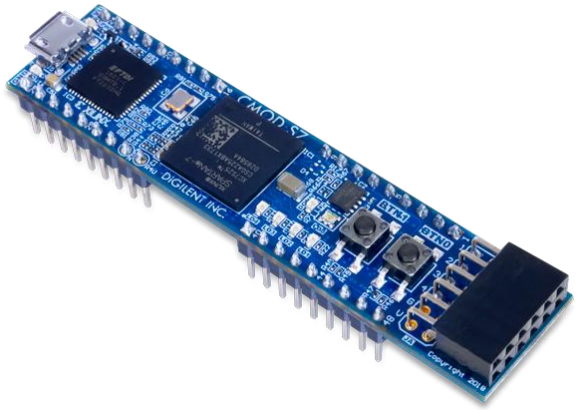

Cmod S7

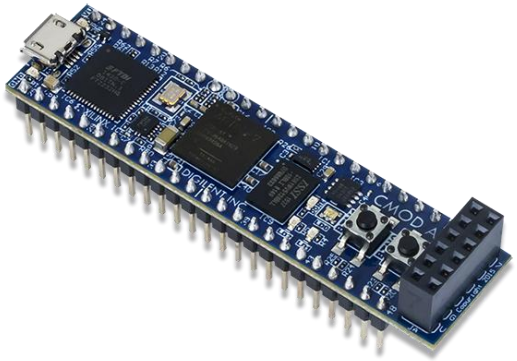

Cmod A7