成功大學
COPYRIGHT 2002 NATIONAL CHENG KUNG UNIVERSITY

National Cheng Kung University

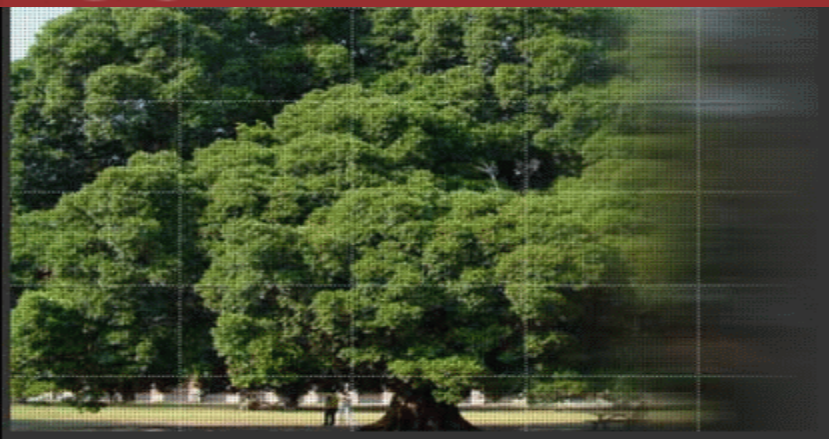

RISC-V Microcontroller On Cmod-A7-35T

Developed by Wei-Feng Huang, DICLAB, NCKU

Outline

成功大學
COPYRIGHT 2002 NATIONAL CHENG KUNG UNIVERSITY

- FPGA Selection and Spec
- Microcontroller Overview
- MDM / GPIO / Interrupt System / Timer & PWM / XADC / UART
- Memory Hierarchy
- Hardware Report
- Software Design Flow
- JTAG Debug Flow
- Standalone Boot Sequence

- FPGA Selection and Spec
- Microcontroller Overview
- MDM / GPIO / Interrupt System / Timer & PWM / XADC / UART
- Memory Hierarchy
- Hardware Report
- Software Design Flow
- JTAG Debug Flow
- Standalone Boot Sequence

FPGA Selection and Spec

成功大學
COPYRIGHT 2002 NATIONAL CHENG KUNG UNIVERSITY

- Board: Cmod-A7-35T
- Chip: xc7a35tcpg236-1
- Breadboard-friendly 48-pin DIP connector
- All 48 DIP pins at LVCMOS33 (3.3 V logic level)
- No series resistors — direct connection to FPGA I/O
- Analog pins: 0–3.3 V input, scaled to 0–1 V via on-board voltage divider
- TWD: 3,092

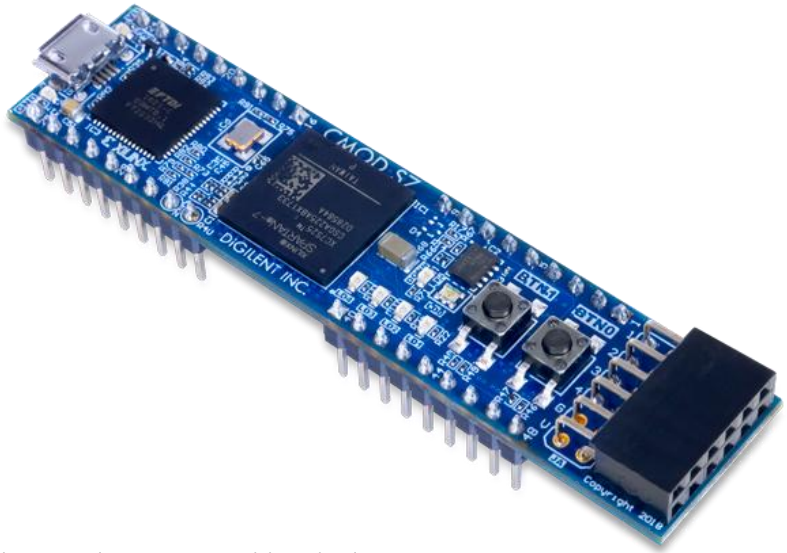

FPGA Selection and Spec

COPYRIGHT 2002 NATIONAL CHENG KUNG UNIVERSITY

UART / JTAG
FTDI FT2232HQ

NOR Flash 4MB:
Micron-N25Q032A (32Mbit / 4MB) or
Macronix-MX25L3233FZBI-08G/Q (32Mbit / 4MB)

Micro-USB

PMOD

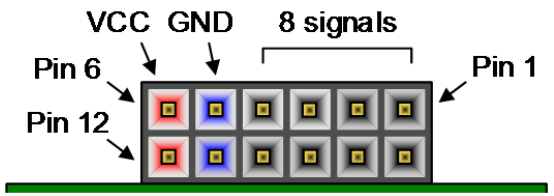

FPGA:
XC7A35T-1CPG236C

SRAM 512KB:
IS61WV5128BLL-10BLI (512KB)

FPGA Selection and Spec

$$V_{DIV} = V_{AIN} \times \frac{R_2}{R_1 + R_2} = V_{AIN} \times \frac{1\,k\Omega}{2.32\,k\Omega + 1\,k\Omega} = V_{AIN} \times 0.301$$

$$V_{DIV} = 3.3 \times 0.301 = 0.994\,V$$

$$V_{measured} = V_{ADx_P} - V_{ADx_N} \approx V_{DIV} - 0 = 0.994\,V$$

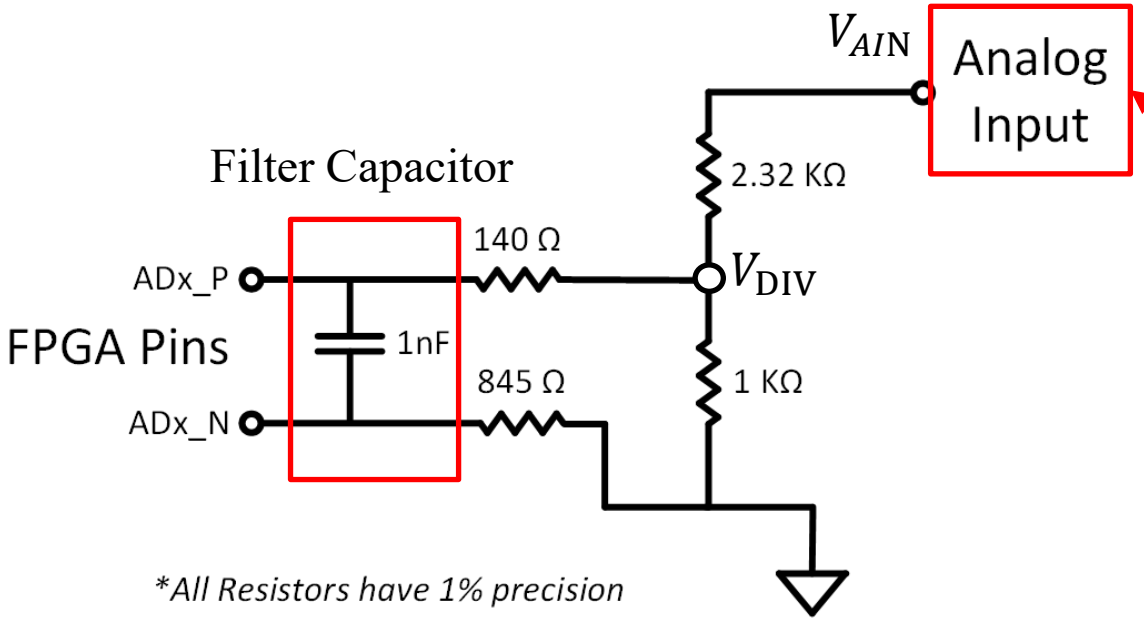

DIP pin:

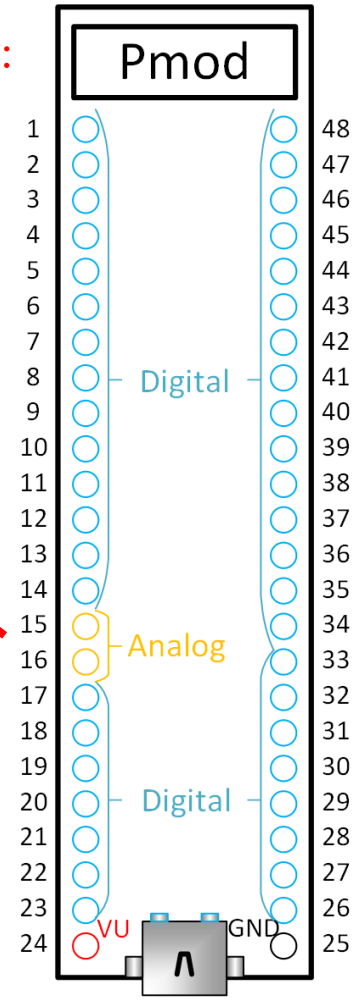

- FPGA Selection and Spec
- Microcontroller Overview
- MDM / GPIO / Interrupt System / Timer & PWM / XADC / UART
- Memory Hierarchy
- Hardware Report
- Software Design Flow
- JTAG Debug Flow
- Standalone Boot Sequence

Microcontroller Overview

成功大學
COPYRIGHT 2002 NATIONAL CHENG KUNG UNIVERSITY

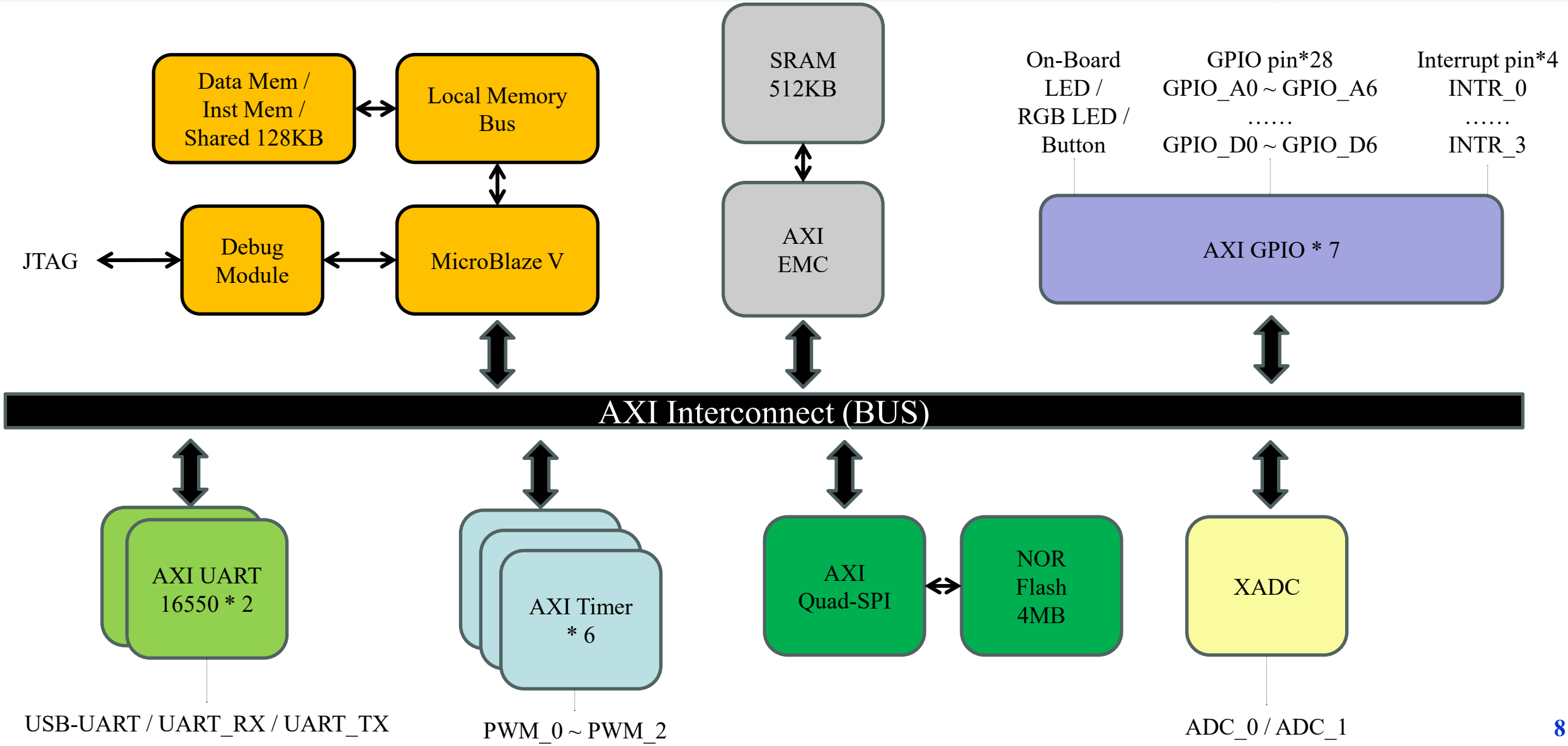

Instruction Path vs Data Path

成功大學
COPYRIGHT 2002 NATIONAL CHENG KUNG UNIVERSITY

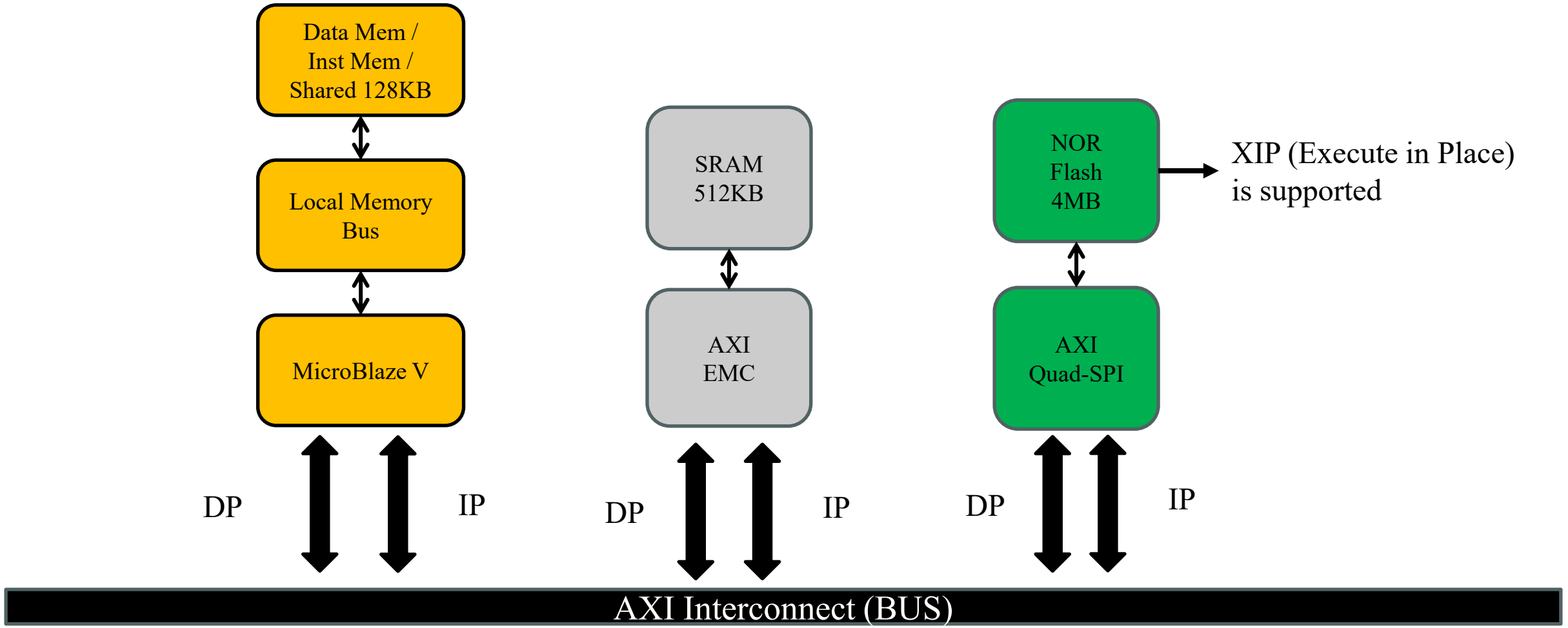

Instruction Network / Data Network

成功大學
COPYRIGHT 2002 NATIONAL CHENG KUNG UNIVERSITY

Name	Interface	Slave Segment	Master Base Address	Range	Master High Address
Network 0 (/microblaze_riscv_0/Data, /microblaze_riscv_0/Instruction)					
/microblaze_riscv_0					
/microblaze_riscv_0/Data (32 address bits : 4G)					
/axi_emc_0/S_AXI_MEM	S_AXI_MEM	MEM0	0x6000_0000	32M	0x61FF_FFFF
/axi_quad_spi_0/AXI_LITE	AXI_LITE	Reg	0x44A2_0000	64K	0x44A2_FFFF
/board_button/S_AXI	S_AXI	Reg	0x4001_0000	64K	0x4001_FFFF
/board_led_2bits/S_AXI	S_AXI	Reg	0x4000_0000	64K	0x4000_FFFF
/board_rgb/S_AXI	S_AXI	Reg	0x4002_0000	64K	0x4002_FFFF
/gpio_A_0_6/S_AXI	S_AXI	Reg	0x4003_0000	64K	0x4003_FFFF
/gpio_B_0_6/S_AXI	S_AXI	Reg	0x4004_0000	64K	0x4004_FFFF
/gpio_C_0_6/S_AXI	S_AXI	Reg	0x4005_0000	64K	0x4005_FFFF
/gpio_D_0_6/S_AXI	S_AXI	Reg	0x4006_0000	64K	0x4006_FFFF
/INT_0_3/S_AXI	S_AXI	Reg	0x4007_0000	64K	0x4007_FFFF
/microblaze_riscv_0_axi_intc/S_AXI	s_axi	Reg	0x4120_0000	64K	0x4120_FFFF
/microblaze_riscv_0_local_memory/dlmb_bram_if_cntlr/S	SLMB	Mem	0x0	128K	0x1_FFFF
/PWM_0/S_AXI	S_AXI	Reg	0x41C1_0000	64K	0x41C1_FFFF
/PWM_1/S_AXI	S_AXI	Reg	0x41C2_0000	64K	0x41C2_FFFF
/PWM_2/S_AXI	S_AXI	Reg	0x41C3_0000	64K	0x41C3_FFFF
/timer_0/S_AXI	S_AXI	Reg	0x41C0_0000	64K	0x41C0_FFFF
/timer_1/S_AXI	S_AXI	Reg	0x41C4_0000	64K	0x41C4_FFFF
/timer_2/S_AXI	S_AXI	Reg	0x41C5_0000	64K	0x41C5_FFFF
/uart_1/S_AXI	S_AXI	Reg	0x44A1_0000	64K	0x44A1_FFFF
/uart_USB/S_AXI	S_AXI	Reg	0x44A0_0000	64K	0x44A0_FFFF
/xadc_wiz_0/s_axi_lite	s_axi_lite	Reg	0x44A3_0000	64K	0x44A3_FFFF
/microblaze_riscv_0/Instruction (32 address bits : 4G)					
/axi_emc_0/S_AXI_MEM	S_AXI_MEM	MEM0	0x6000_0000	32M	0x61FF_FFFF
/axi_quad_spi_0/AXI_LITE	AXI_LITE	Reg	0x44A2_0000	64K	0x44A2_FFFF
/microblaze_riscv_0_local_memory/ilmb_bram_if_cntlr/S	SLMB	Mem	0x0	128K	0x1_FFFF

Memory-Mapped I/O vs SFR

成功大學
COPYRIGHT 2002 NATIONAL CHENG KUNG UNIVERSITY

- Memory-Mapped I/O (MMIO):
  - Peripherals are mapped into the memory address space
  - Accessed using normal load/store instructions
  - Easy to integrate and extend (add new devices by assigning new addresses)

- SFR (Special Function Registers) in traditional MCUs (e.g., PIC):
  - Peripheral control uses dedicated special registers
  - Often requires bank selection / bit-level control
  - Less flexible when scaling to more peripherals

AXI Mapping

成功大學
COPYRIGHT 2002 NATIONAL CHENG KUNG UNIVERSITY

- Although each peripheral is mapped to a memory address range, this address region does not correspond to physical RAM.
- Instead, AXI address decoding and routing logic forwards these transactions to the target peripheral's register interface (MMIO).

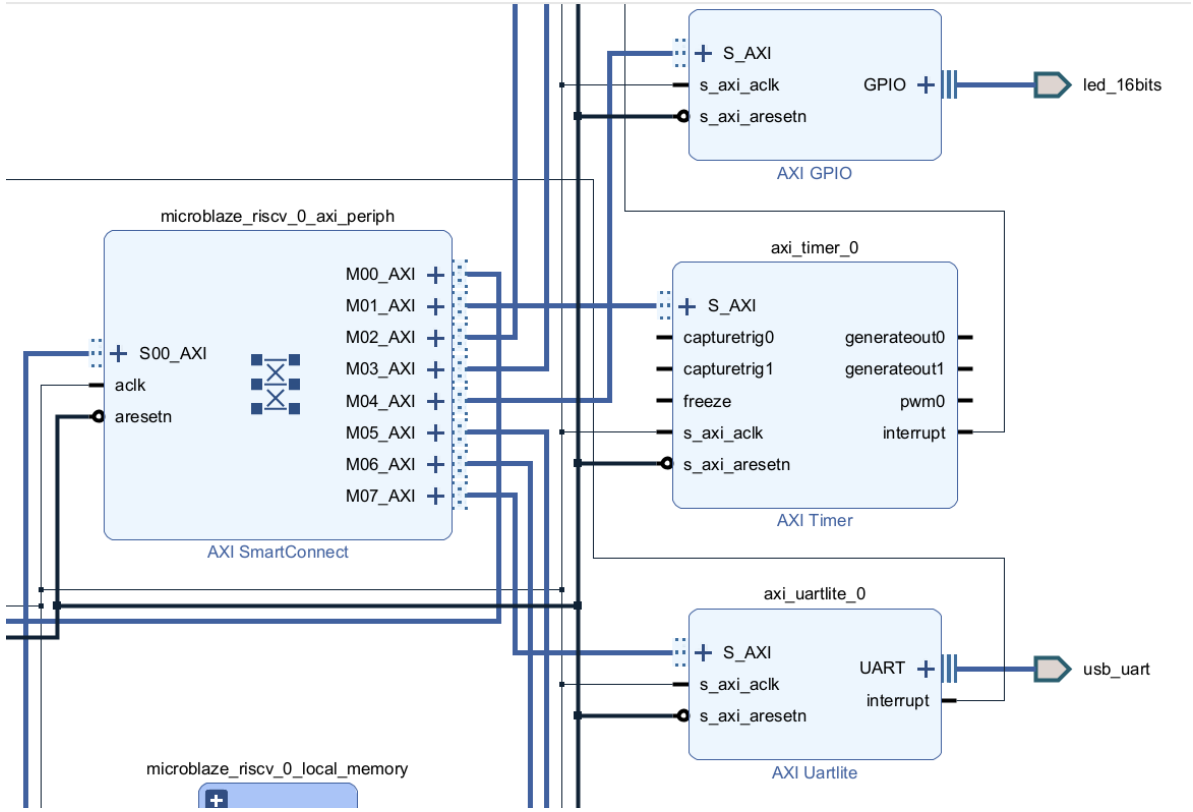

Microcontroller Overview

成功大學
COPYRIGHT 2002 NATIONAL CHENG KUNG UNIVERSITY

- Processor: MicroBlaze RISC-V, 32-bit, Single Core, 5-Stage Pipeline
- Clock: 100 MHz (12 MHz OSC → Clocking Wizard PLL)
- ISA Extensions: **RV32IM_Zba_Zbb_Zbc_Zbs**
- Local Memory: 128 KB BRAM (ILMB + DLMB)
- Cache: Disabled (I-Cache & D-Cache both off)
- Debug: MDM JTAG — breakpoints, register, memory R/W
- Interrupt: AXI INTC, 6 sources (3 Timer + 2 UART + 1 GPIO)

- FPGA Selection and Spec
- Microcontroller Overview
- MDM / GPIO / Interrupt System / Timer & PWM / XADC / UART
- Memory Hierarchy
- Hardware Report
- Software Design Flow
- JTAG Debug Flow
- Standalone Boot Sequence

MDM (MicroBlaze Debug Module)

成功大學
COPYRIGHT 2002 NATIONAL CHENG KUNG UNIVERSITY

- **MDM (MicroBlaze Debug Module)**
  - Hardware debug bridge: JTAG ↔ MicroBlaze RISC-V core
  - Connected to MicroBlaze via **DEBUG port**
- Debug Memory Access (RISC-V Debug Spec 0.13.2):
  - **Abstract Access** — debugger issues memory read/write commands directly through the Debug Module, without CPU involvement
  - **Program Buffer** — Debug Module halts the CPU, then injects load/store instructions for the CPU to execute on its own bus interface
- Data Path:
  - PC → USB → JTAG → **MDM** → CPU DEBUG port → LMB Bus / AXI Bus

GPIO

COPYRIGHT 2002 NATIONAL CHENG KUNG UNIVERSITY

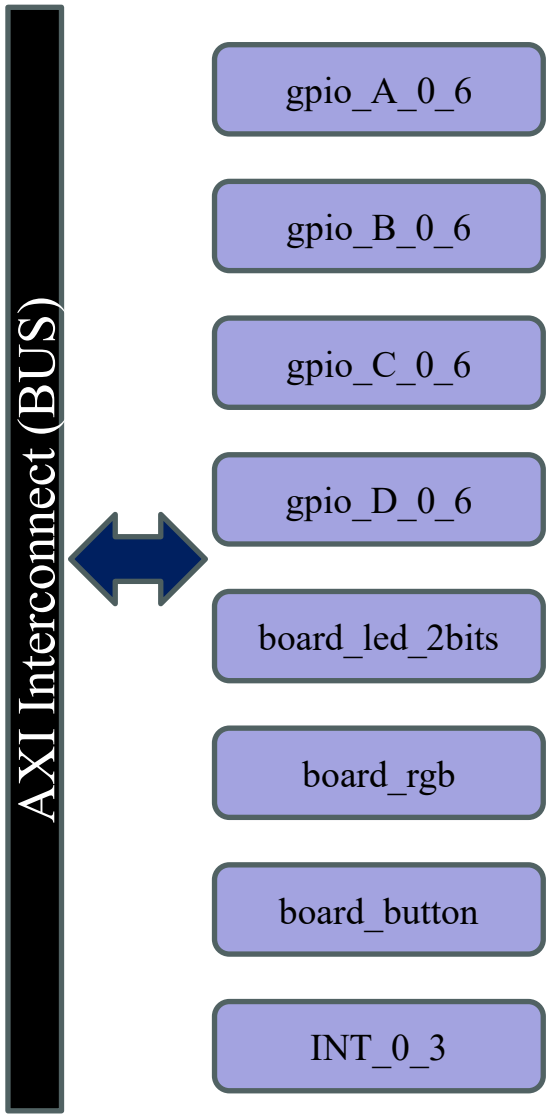

3.1 On-Board GPIO

Instance	AXI Base Address	Width	Direction	Connection	Description
`board_led_2bits`	`0x4000_0000`	2	Output	A17, C16	On-board LEDs × 2
`board_button`	`0x4001_0000`	1	Input	A18	On-board push button × 1
`board_rgb`	`0x4002_0000`	3	Output	B17, B16, C17	On-board RGB LED (R/G/B)

3.2 DIP Connector GPIO (4 Groups × 7-bit)

Instance	AXI Base Address	Width	DIP Pins	Description
`gpio_A_0_6`	`0x4003_0000`	7	Pin 1–7	GPIO Group A, bidirectional I/O
`gpio_B_0_6`	`0x4004_0000`	7	Pin 17–23	GPIO Group B, bidirectional I/O
`gpio_C_0_6`	`0x4005_0000`	7	Pin 42–48	GPIO Group C, bidirectional I/O
`gpio_D_0_6`	`0x4006_0000`	7	Pin 26–32	GPIO Group D, bidirectional I/O

3.3 External Interrupt Inputs (`INT_0_3`)

Parameter	Value
AXI Base Address	`0x4007_0000`
Width	4-bit (all inputs)
Interrupt Capability	Enabled (`C_INTERRUPT_PRESENT = 1`)

Timer & PWM

COPYRIGHT 2002 NATIONAL CHENG KUNG UNIVERSITY

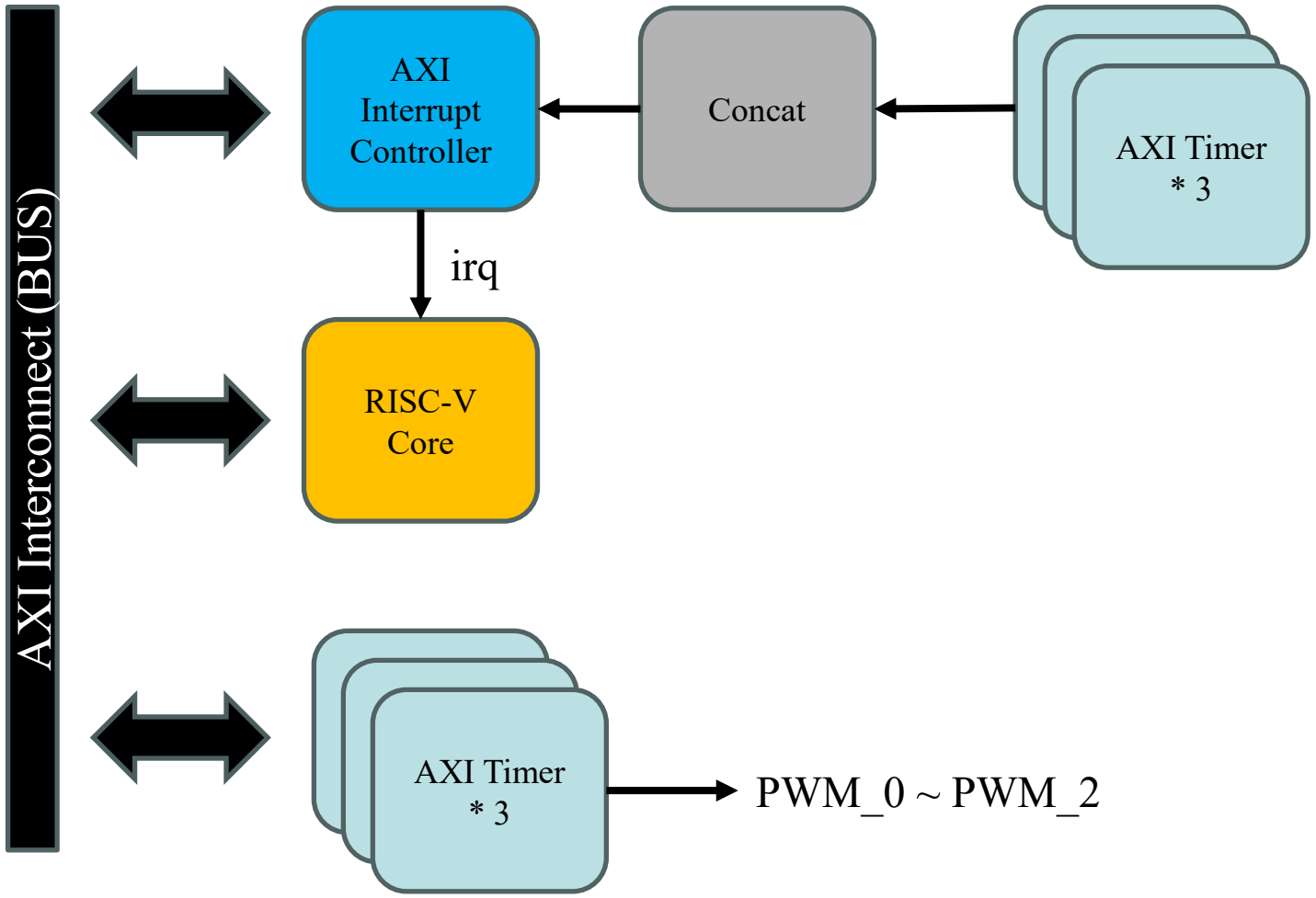

- 6 AXI Timer Instances — Two Roles:
  - 3 × System Timers (timer_0 / timer_1 / timer_2)
    - Connected to AXI Interrupt Controller
  - 3 × PWM Timers (PWM_0 / PWM1 / PWM_2)
    - Generate periodic interrupts for scheduling, timeout, or time measurement
    - Used for servo control (SG90)
- All 6 timers are the same IP, the difference is purely in how they are used — interrupt source vs. PWM output.

UART

成功大學
COPYRIGHT 2002 NATIONAL CHENG KUNG UNIVERSITY

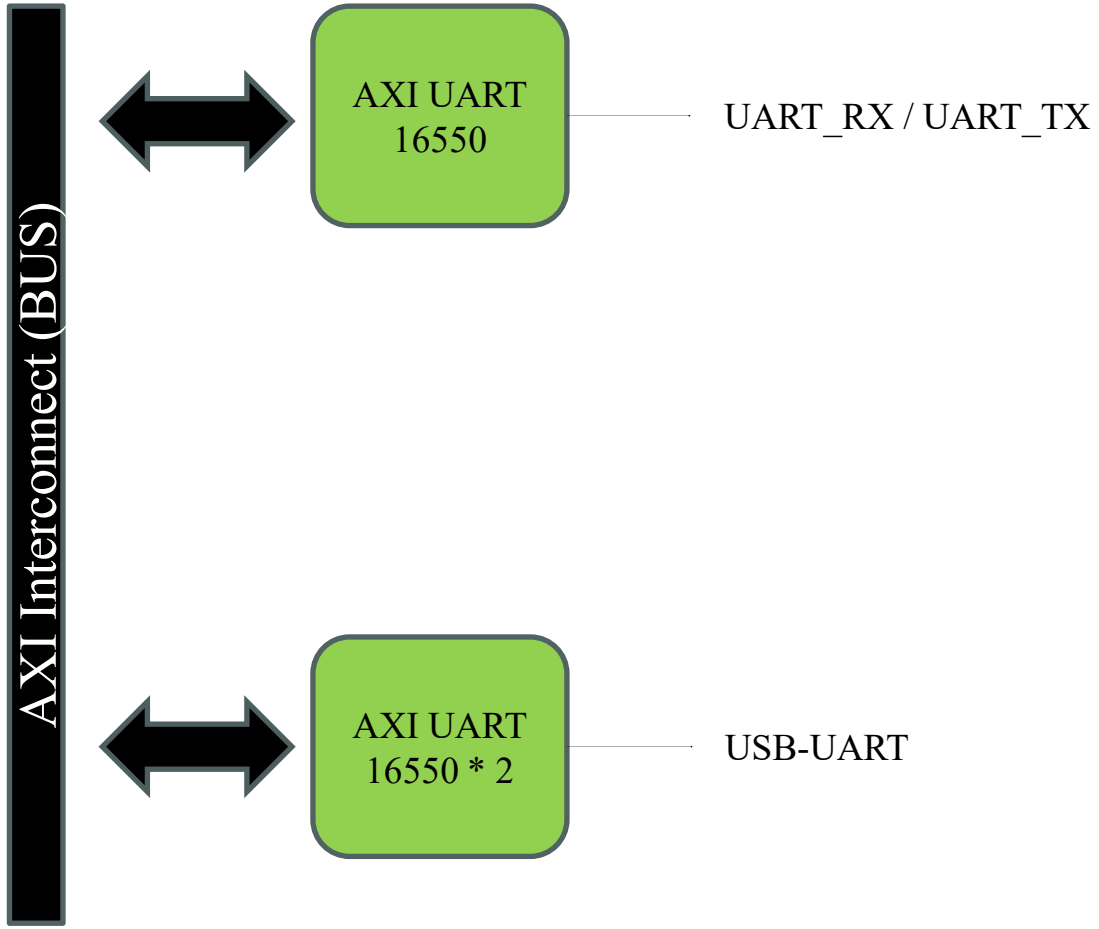

- 2 × AXI UART 16550 Instances:
  - uart_USB — Console / Debug
    - Connected to on-board USB-UART via Micro-USB (J3)
    - No DIP pin exposed — accessed through USB cable
  - uart_1 — External Communication
    - TX/RX routed to DIP Pin 11 / Pin 12
    - Available for connecting external devices (sensors, modules, another MCU)

XADC

成功大學
COPYRIGHT 2002 NATIONAL CHENG KUNG UNIVERSITY

- XADC — On-chip Analog-to-Digital Converter
  - Built-in 12-bit ADC inside Artix-7 FPGA
- Enabled Channels (Continuous Sequencer):
  - VAUX4 (DIP Pin 15) — external analog input
  - VAUX12 (DIP Pin 16) — external analog input
  - Temperature — on-chip die temperature
  - VCCINT — core voltage monitor (1.0 V)
  - VCCAUX — auxiliary voltage monitor (1.8 V)
- Key Specs:
  - Total conversion rate: 500 Kilo Samples Per Second (KSPS)
  - Per-channel effective rate: ~100 KSPS (500K ÷ 5 channels)
  - Input range: 0–1 V at FPGA pins (3.3 V on DIP pin scaled by on-board voltage divider)
  - Resolution: 12-bit (4096 levels)

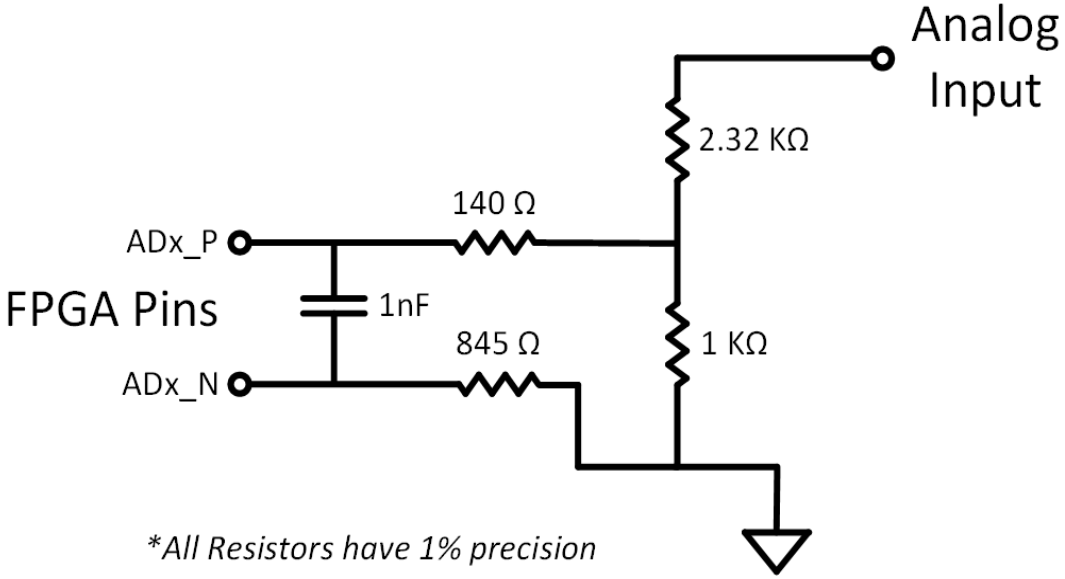

Interrupt System

COPYRIGHT 2002 NATIONAL CHENG KUNG UNIVERSITY

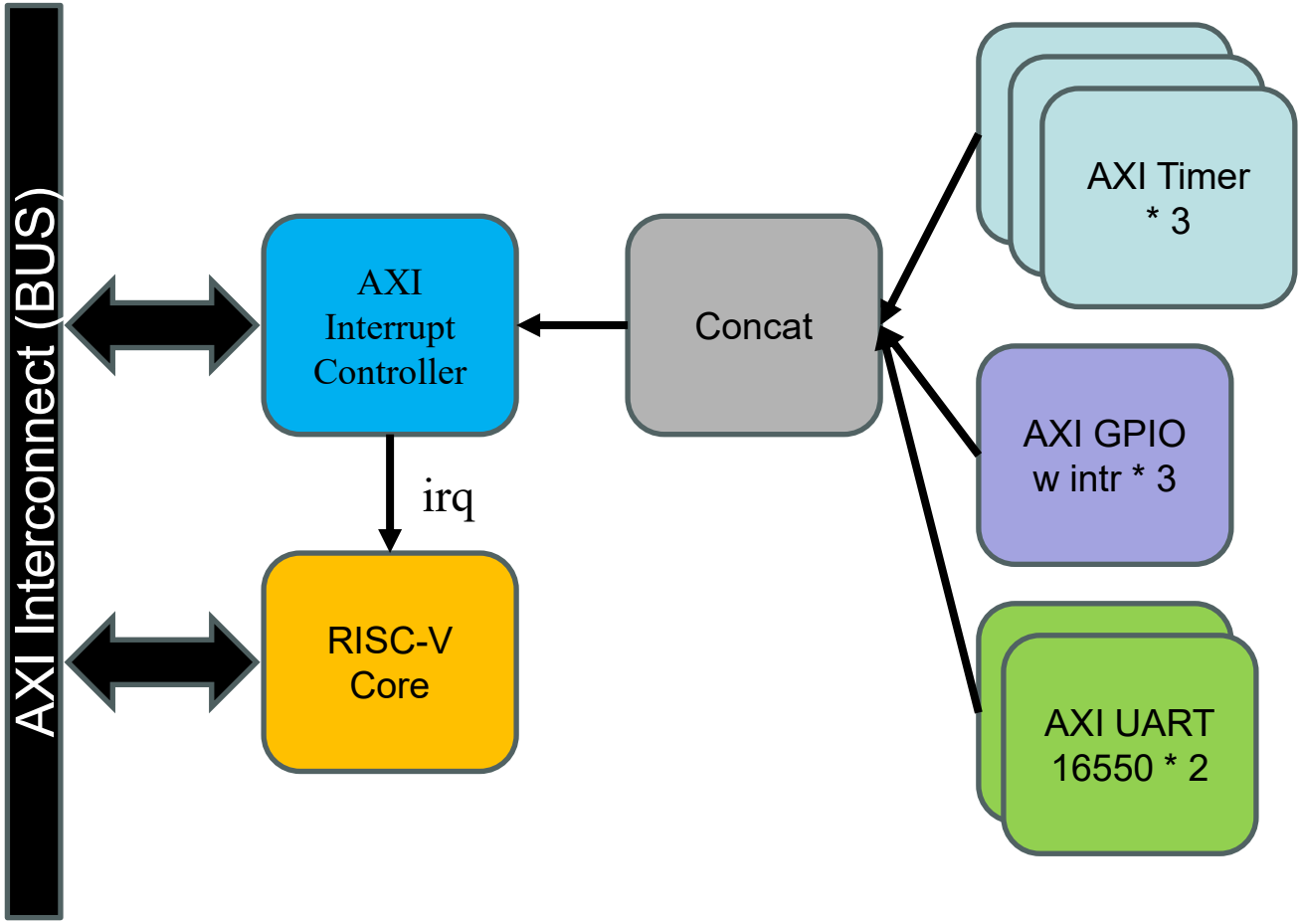

Interrupt handling flow (Normal Mode) :

1.Peripheral asserts interrupt line

2.Concat interrupt lines → AXI Interrupt Controller

3.AXI Interrupt Controller asserts IRQ → CPU

4.CPU jumps to fixed ISR entry point

5.Reads axi_intc register to identify source

6.Branches to corresponding handler

7.Handler processes the event

8.Clear peripheral interrupt first

9.Then clear axi_intc

10.Return from ISR, CPU resumes normal execution

- FPGA Selection and Spec
- Microcontroller Overview
- MDM / GPIO / Interrupt System / Timer & PWM / XADC / UART
- Memory Hierarchy
- Hardware Report
- Software Design Flow
- JTAG Debug Flow
- Standalone Boot Sequence

Memory Hierarchy

成功大學
COPYRIGHT 2002 NATIONAL CHENG KUNG UNIVERSITY

- FPGA Selection and Spec
- Microcontroller Overview
- MDM / GPIO / Interrupt System / Timer & PWM / XADC / UART
- Memory Hierarchy
- Hardware Report
- Software Design Flow
- JTAG Debug Flow
- Standalone Boot Sequence

Hardware Report

COPYRIGHT 2002 NATIONAL CHENG KUNG UNIVERSITY

Utilization Post-Synthesis | **Post-Implementation**

Graph | Table

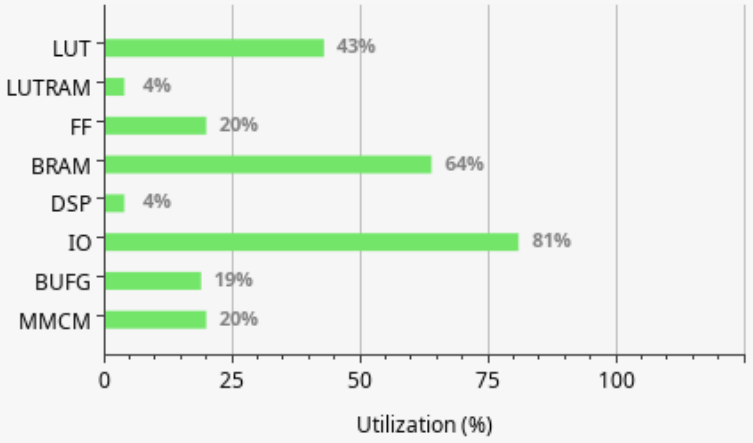

Utilization Post-Synthesis | **Post-Implementation**

Graph | **Table**

Resource	Utilization	Available	Utilization %
LUT	8954	20800	43.05
LUTRAM	429	9600	4.47
FF	8369	41600	20.12
BRAM	32	50	64.00
DSP	4	90	4.44
IO	86	106	81.13
BUFG	6	32	18.75
MMCM	1	5	20.00

Timing **Setup** | Hold | Pulse Width

Worst Negative Slack (WNS):	0.616 ns
Total Negative Slack (TNS):	0 ns
Number of Failing Endpoints:	0
Total Number of Endpoints:	20847

Implemented Timing Report

Power Summary | **On-Chip**

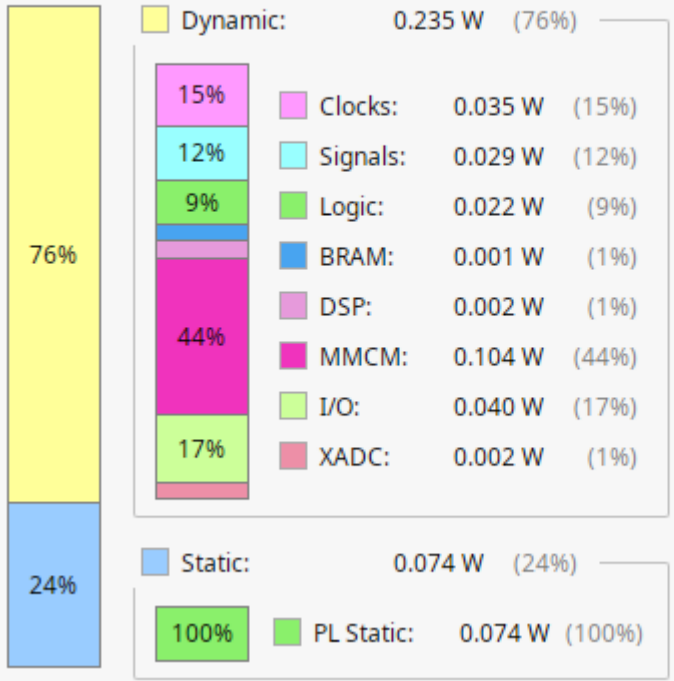

- FPGA Selection and Spec
- Microcontroller Overview
- MDM / GPIO / Interrupt System / Timer & PWM / XADC / UART
- Memory Hierarchy
- Hardware Report
- Software Design Flow
- JTAG Debug Flow
- Standalone Boot Sequence

Ripes

COPYRIGHT 2002 NATIONAL CHENG KUNG UNIVERSITY

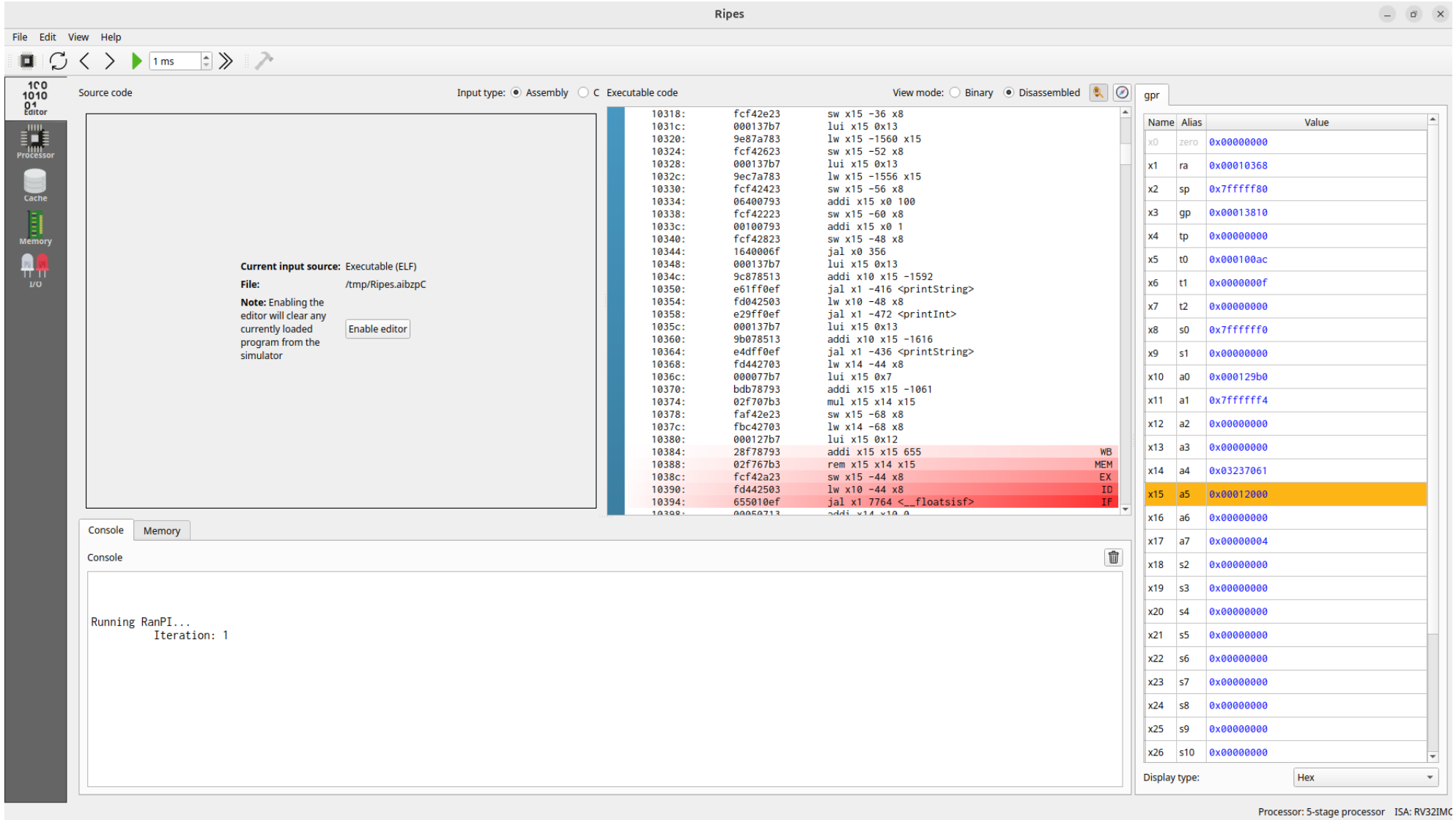

Ripes

成功大學
COPYRIGHT 2002 NATIONAL CHENG KUNG UNIVERSITY

Ripes

File Edit View Help

1 ms

Editor
Processor
Cache
Memory
I/O

Memory viewer

Address	Word	Byte 0	Byte 1	Byte 2	Byte 3
0x00000084	0x00013444	0x44	0x34	0x01	0x00
0x00000080	0x00000000	0x00	0x00	0x00	0x00
0x0000007c	0x00070003	0x03	0x00	0x07	0x00
0x00000078	0x00000000	0x00	0x00	0x00	0x00
0x00000074	0x00013438	0x38	0x34	0x01	0x00
0x00000070	0x00000000	0x00	0x00	0x00	0x00
0x0000006c	0x00060003	0x03	0x00	0x06	0x00
0x00000068	0x00000000	0x00	0x00	0x00	0x00
0x00000064	0x00013010	0x10	0x30	0x01	0x00
0x00000060	0x00000000	0x00	0x00	0x00	0x00
0x0000005c	0x00050003	0x03	0x00	0x05	0x00
0x00000058	0x00000000	0x00	0x00	0x00	0x00
0x00000054	0x0001300c	0x0c	0x30	0x01	0x00
0x00000050	0x00000000	0x00	0x00	0x00	0x00
0x0000004c	0x00040003	0x03	0x00	0x04	0x00
0x00000048	0x00000000	0x00	0x00	0x00	0x00
0x00000044	0x00013004	0x04	0x30	0x01	0x00
0x00000040	0x00000000	0x00	0x00	0x00	0x00
0x0000003c	0x00030003	0x03	0x00	0x03	0x00
0x00000038	0x00000000	0x00	0x00	0x00	0x00
0x00000034	0x00013000	0x00	0x30	0x01	0x00
0x00000030	0x00000000	0x00	0x00	0x00	0x00
0x0000002c	0x00020003	0x03	0x00	0x02	0x00
0x00000028	0x00000000	0x00	0x00	0x00	0x00
0x00000024	0x000129b0	0xb0	0x29	0x01	0x00
0x00000020	0x00000000	0x00	0x00	0x00	0x00
0x0000001c	0x00010003	0x03	0x00	0x01	0x00

Display type: Hex Go to register: Go to section:

Memory map

Name	Size	Range
.symtab	1632	0x00000000 – 0x0000065f
.text	10552	0x00010074 – 0x000129ab
.rodata	576	0x000129b0 – 0x00012bef
.eh_frame	4	0x00013000 – 0x00013003
.init_array	8	0x00013004 – 0x0001300b
.fini_array	4	0x0001300c – 0x0001300f
.data	1064	0x00013010 – 0x00013437
.sdata	12	0x00013438 – 0x00013443
.bss	0	0x00013444 – 0x00013443

Processor: 5-stage processor ISA: RV32IMC

Software Design Flow

成功大學
COPYRIGHT 2002 NATIONAL CHENG KUNG UNIVERSITY

- Two development approaches:
  - Xilinx Vitis + Embedded SW Libraries
    - Official IDE with BSP auto-generation
    - Includes drivers for all AXI peripherals (GPIO, UART, Timer, SPI, EMC)

AMD Vitis

  - RISC-V GNU Toolchain
    - Standalone GCC cross-compiler (riscv32-unknown-elf / riscv64-unknown-elf)
    - Full control over linker scripts, startup code, and register-level access
    - No dependency on Xilinx toolchain

riscv-collab/**riscv-gnu-toolchain**

GNU toolchain for RISC-V, including GCC

100 Contributors | 29 Issues | 4k Stars | 1k Forks

XSDB (Xilinx System Debugger)

成功大學
COPYRIGHT 2002 NATIONAL CHENG KUNG UNIVERSITY

- XSDB (Xilinx System Debugger)
  - Command-line debug interface over JTAG
  - Connects to MicroBlaze via MDM (MicroBlaze Debug Module)
  - Capabilities:
    - Download ELF directly to BRAM/SRAM/Flash — no Flash needed
    - Halt, step, and resume CPU execution
    - Read/write memory and registers in real time
    - Enables rapid code-test-fix cycles during development
    - No bootloader required

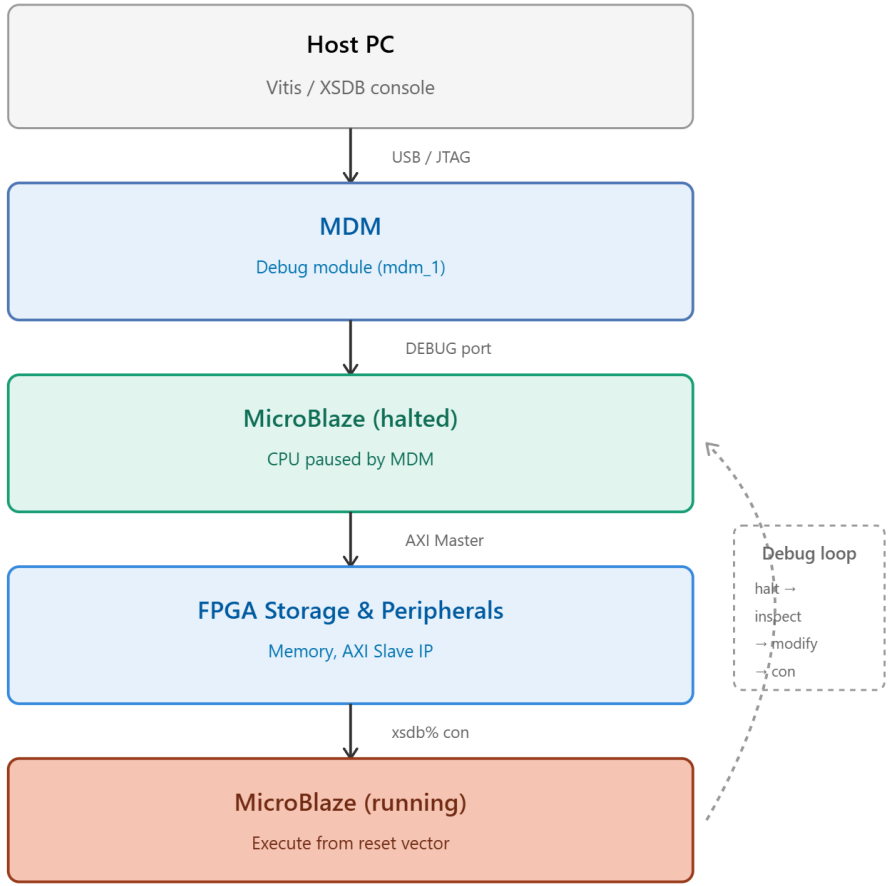

- FPGA Selection and Spec
- Microcontroller Overview
- MDM / GPIO / Interrupt System / Timer & PWM / XADC / UART
- Memory Hierarchy
- Hardware Report
- Software Design Flow
- JTAG Debug Flow
- Standalone Boot Sequence

JTAG Debug Flow

成功大學
COPYRIGHT 2002 NATIONAL CHENG KUNG UNIVERSITY

- RISC-V-MCU-on-Cmod-A7/Vitis-Software-Dev-Guide/JTAG-Debug-Mode/JTAG-Debug-Mode.md at main · ukp66482/RISC-V-MCU-on-Cmod-A7

- FPGA Selection and Spec
- Microcontroller Overview
- MDM / GPIO / Interrupt System / Timer & PWM / XADC / UART
- Memory Hierarchy
- Hardware Report
- Software Design Flow
- JTAG Debug Flow
- Standalone Boot Sequence

Standalone Boot Sequence

成功大學
COPYRIGHT 2002 NATIONAL CHENG KUNG UNIVERSITY

Reference

成功大學
COPYRIGHT 2002 NATIONAL CHENG KUNG UNIVERSITY

- The RISC-V Instruction Set Manual, Volume I :: RISC-V Ratified Specifications Library
- The RISC-V Instruction Set Manual, Volume II :: RISC-V Ratified Specifications Library
- riscv-debug-release.pdf
- Introduction • MicroBlaze V Processor Reference Guide (UG1629) • Reader • AMD Technical Information Portal
- Introduction • MicroBlaze Debug Module V (MDM V) LogiCORE IP Product Guide (PG428) • Reader • AMD Technical Information Portal
- Getting Started with Vitis • Vitis Unified Software Platform Documentation: Embedded Software Development (UG1400) • Reader • AMD Technical Information Portal
- BSP and Libraries Overview • Standalone Library Documentation: BSP and Libraries Document Collection (UG643) • Reader • AMD Technical Information Portal

Issue to Address

成功大學
COPYRIGHT 2002 NATIONAL CHENG KUNG UNIVERSITY

- Interrupt (GPIO / Timer)
- GPIO input
- uart 16550 Baud Rate 更改
- XADC 五個channel讀值
- QSPI 內建 Bitstream
- EMC SRAM 使用
- Memory Hier 設計
- Standalone Boot Sequence流程