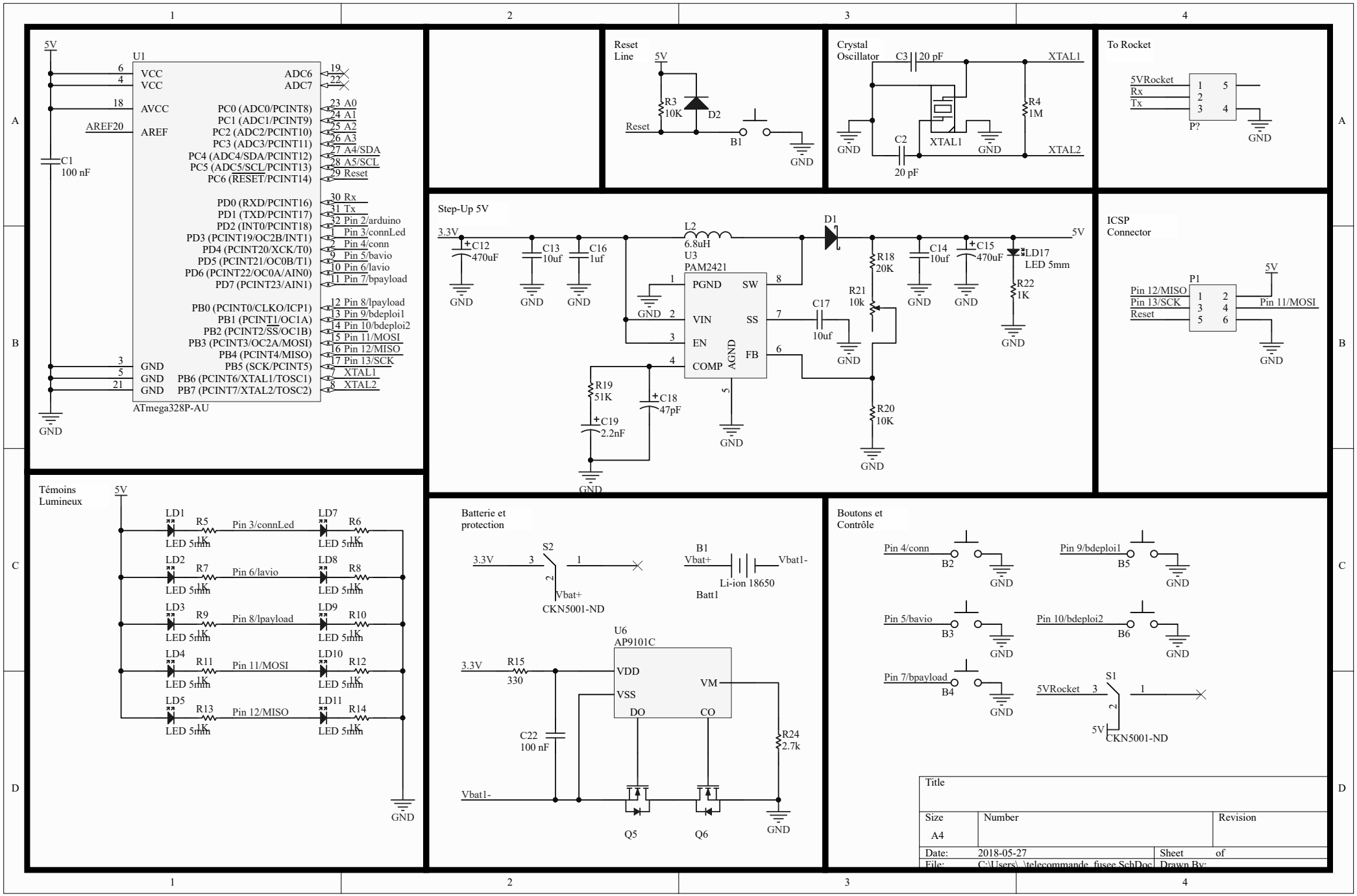
U1
ATmega328P-AU
VCC
VCC
AVCC
AREF
GND
GND
GND
ADC6
ADC7
PC0 (ADC0/PCINT8)
PC1 (ADC1/PCINT9)
PC2 (ADC2/PCINT10)
PC3 (ADC3/PCINT11)
PC4 (ADC4/SDA/PCINT12)
PC5 (ADC5/SCL/PCINT13)
PC6 (RESET/PCINT14)
PD0 (RXD/PCINT16)
PD1 (TXD/PCINT17)
PD2 (INT0/PCINT18)
PD3 (PCINT19/OC2B/INT1)
PD4 (PCINT20/XCK/T0)
PD5 (PCINT21/OC0B/T1)
PD6 (PCINT22/OC0A/AIN0)
PD7 (PCINT23/AIN1)
PB0 (PCINT0/CLKO/ICP1)
PB1 (PCINT1/OC1A)
PB2 (PCINT2/SS/OC1B)
PB3 (PCINT3/OC2A/MOSI)
PB4 (PCINT4/MISO)
PB5 (SCK/PCINT5)
PB6 (PCINT6/XTAL1/TOSC1)
PB7 (PCINT7/XTAL2/TOSC2)
A0
A1
A2
A3
A4/SDA
A5/SCL
Reset
Rx
Tx
Pin 2/arduino
Pin 3/connLed
Pin 4/conn
Pin 5/bavio
Pin 6/lavio
Pin 7/bpayload
Pin 8/lpayload
Pin 9/bdeploi1
Pin 10/bdeploi2
Pin 11/MOSI
Pin 12/MISO
Pin 13/SCK
XTAL1
XTAL2
AREF20
C1
100 nF
Reset Line
R3
10K
D2
B1
Crystal Oscillator
C3
20 pF
C2
20 pF
XTAL1
XTAL2
R4
1M
To Rocket
5VRocket
Rx
Tx
P?
Step-Up 5V
3.3V
C12
470uF
C13
10uf
C16
1uf
L2
6.8uH
U3
PAM2421
PGND
VIN
EN
COMP
SW
SS
FB
AGND
D1
R18
20K
R21
10k
R20
10K
C14
10uf
C15
470uF
LD17
LED 5mm
R22
1K
C17
10uf
R19
51K
C18
47pF
C19
2.2nF
ICSP Connector
P1
Pin 12/MISO
Pin 13/SCK
Reset
Pin 11/MOSI
Témoins Lumineux
LD1
R5
Pin 3/connLed
LD7
R6
LED 5mm
1K
LD2
R7
Pin 6/lavio
LD8
R8
LD3
R9
Pin 8/lpayload
LD9
R10
LD4
R11
Pin 11/MOSI
LD10
R12
LD5
R13
Pin 12/MISO
LD11
R14
Batterie et protection
S2
Vbat+
CKN5001-ND
B1
Vbat+
Vbat1-
Li-ion 18650
Batt1
U6
AP9101C
VDD
VSS
DO
VM
CO
R15
330
C22
100 nF
R24
2.7k
Vbat1-
Q5
Q6
Boutons et Contrôle
Pin 4/conn
B2
Pin 9/bdeploi1
B5
Pin 5/bavio
B3
Pin 10/bdeploi2
B6
Pin 7/bpayload
B4
5VRocket
S1
CKN5001-ND
Title
Size
A4
Number
Revision
Date:
2018-05-27
Sheet
of
File:
C:\Users\...\telecommande_fusee.SchDoc
Drawn By: