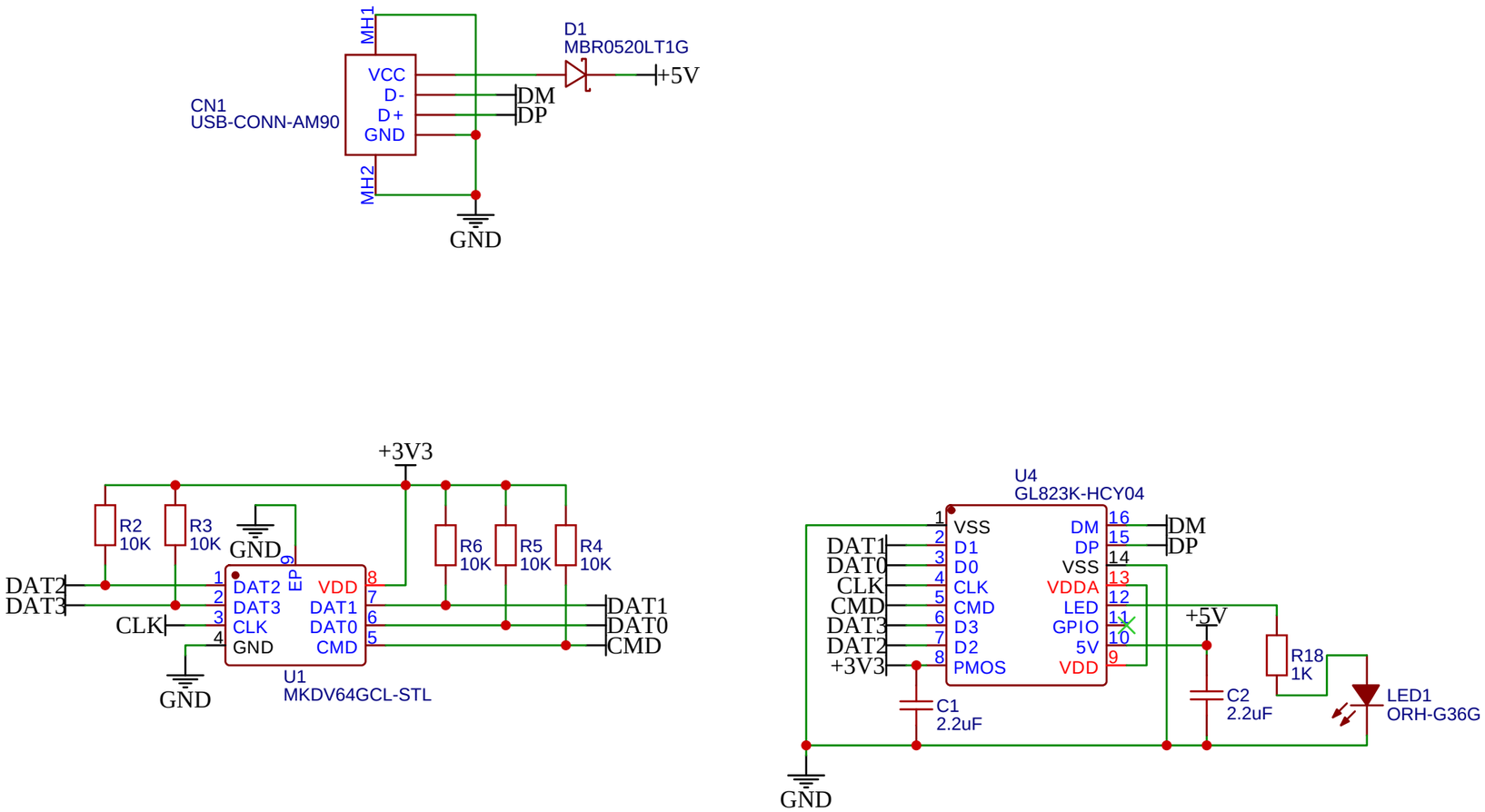

TITLE: DIY USB FLASH DRIVE	REV: 1.0
EasyEDA	Company: UI42
	Sheet: 1/1
	Date: 2021-09-05 Drawn By: U L 42