Technical Laboratory Report: Amplifier

Ulker Aliyeva, Nazile Aliyeva
Verified by: Physics Teacher Azerbaijan Telman Askeraliyev (Fizika Muellimi, Azerbaijan, Baku)

What is an Amplifier?

An ampilfier is an electronic device that increases the power, voltage, or current of an input signal. It takes a weak audio, radio, or other signal and boosts it to a higher level.

- **Amplifies:** *Power, Voltage, or Current*
- **Used in:** Audio Equipment, Radios, Communication Systems
- **Applications:** Speakers, Televisions, Transmitters

Enhances the signal strength for better performance.

What is an Amplifier?

An **amplifier** is an electronic device that increases the strength of a signal. It takes a weak input signal (such as sound, radio waves, or electrical signals) and produces a stronger output signal without changing the original information.

How an Amplifier Works

An amplifier works by using an external power source to boost the input signal. The basic process is:

- A **weak input signal** enters the amplifier
- The amplifier uses energy from a power supply
- It produces a **stronger (amplified) output signal**

The key idea:
The shape of the signal stays the same, but its amplitude (strength) increases.

Key Types of Amplifiers

1. Voltage Amplifier

•Increases voltage

•Used in sensors and signal processing

2. Current Amplifier

•Increases current

•Used in power control circuits

3. Power Amplifier

•Increases overall power (voltage × current)

•Used in speakers and audio systems

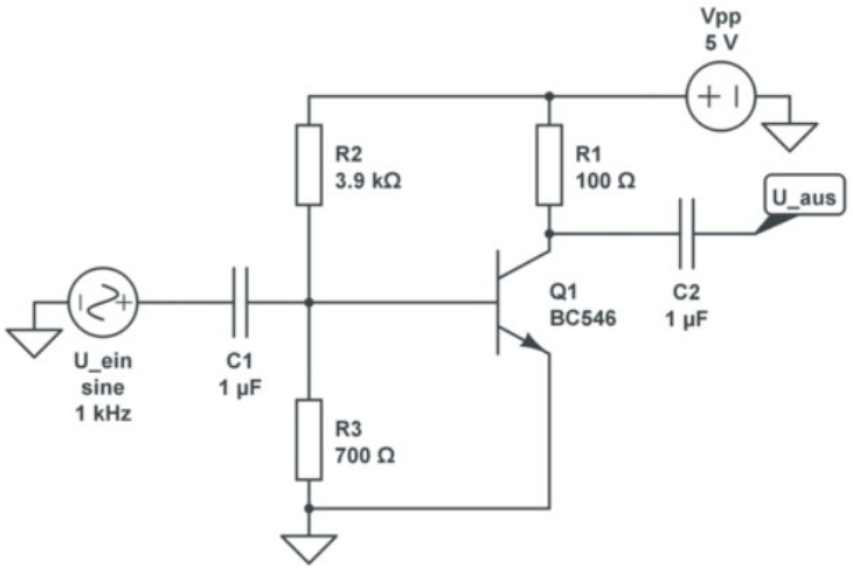

Main Components

Most amplifiers are built using:

- **Transistors** – act as the main amplifying element
- **Resistors** – control current and voltage
- **Capacitors** – filter and stabilize signals
- **Power Supply** – provides energy for amplification

Important Terms

- **Gain**: How much the signal is amplified
Gain = Output SignaI / Input Signal

- **Input Signal**: The original weak signal

- **Output Signal**: The amplified (stronger) signal

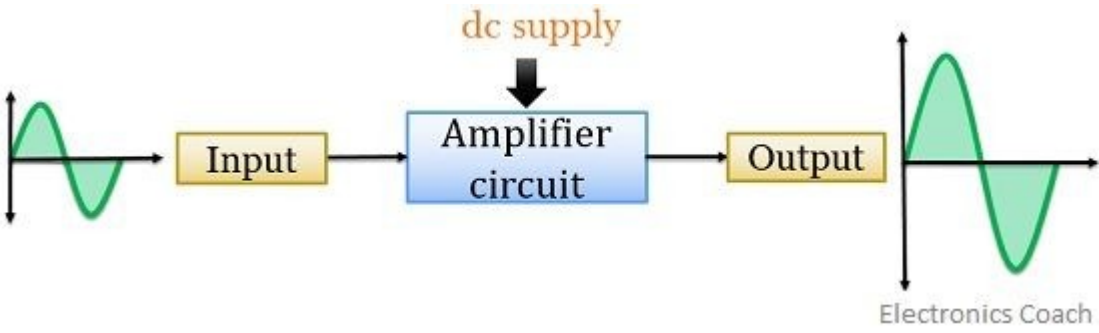

Applications of Amplifiers

Amplifiers are used everywhere in electronics:

- 🎧 Audio systems (speakers, headphones)
- □ Radios and communication systems
- 📺 Televisions
- □ Mobile phones
- □ Microphones