Technical Laboratory Report: Transistor

Ulker Aliyeva, Nazile Aliyeva, Fazil Isgender, Ali Shukurov

Verified by: Physics Teacher Azerbaijan Telman Askeraliyev (Fizika Muellimi, Azerbaijan, Baku)

THE TRANSISTOR

A transistor is a three-terminal semiconductor device used to amplify or switch electronic signals.

Structure

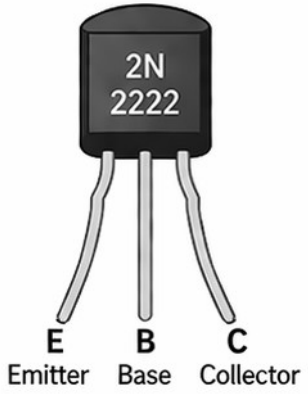

(TO-92 package)

Symbol (NPN)

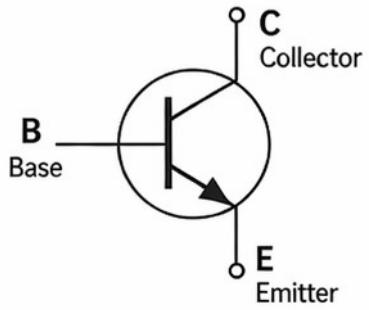

Symbol (PNP)

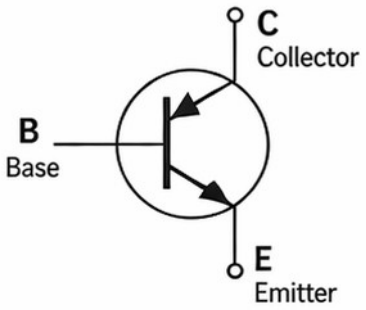

Terminals

Emitter (E): emits charge carriers.

Base (B): controls the current.

Collector (C): collects charge carriers.

Types

NPN: Most common type.

PNP: Works with opposite polarities.

Key Idea

A small current into the Base controls a much larger current between Collector and Emitter.

How It Works (NPN)

OFF (Cutoff)

No current in the base ($I_B \approx 0$) → No current flows between collector and emitter ($I_C \approx 0$).

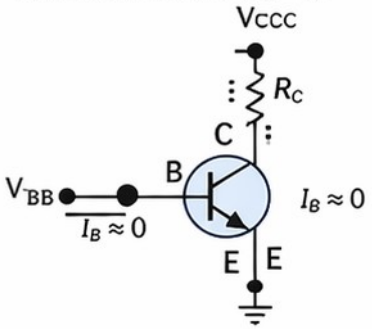

The transistor is **OFF.**

ON (Active)

A small base current (I_B) flows → A larger collector current (I_C) flows.

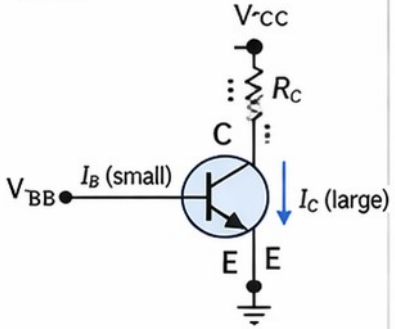

The transistor is **ON.**

Amplification

The collector current is roughly β (h_{FE}) times the base current.

$$I_C \approx \beta \times I_B$$

Where β is the current gain (typically 50 to 300).

Applications

- Amplifiers (increase signal strength)
- Switches (turn circuits ON/OFF)
- Oscillators, signal processing, and more.

Transistor – How Does It Work?

transistor is a semiconductor device used to **switch** or **amplify** electrical signals.

Basic Working Principle (BJT example)

A transistor has **three terminals**:

- **Emitter (E)** – sends charge carriers
- **Base (B)** – controls the device
- **Collector (C)** – receives carriers

☞ Key idea:

A **small current at the Base controls a much larger current** flowing from Collector to Emitter.

Modes of Operation

- **Cutoff (OFF)** → No base current → no current flows
- **Active (Amplification)** → small base current → large collector current
- **Saturation (ON)** → maximum current flows

Key Terms to Know

Voltage (V) – electrical potential difference

Current (I) – flow of charge (A)

Resistance (R) – opposition to current (Ω)

Gain (β or hFE) – amplification factor

Semiconductor – material with controllable conductivity (e.g. silicon)

PN Junction – boundary between P-type and N-type materials

Biasing – applying voltage to operate a transistor properly

Types of Transistors

1. BJT (Bipolar Junction Transistor)

Small **base current** controls large **collector-emitter current**

2. FET (Field Effect Transistor)

Voltage at the **gate** controls current between **drain** and **source**

3. MOSFET (Most Popular Type)

Voltage at the **gate** controls current between **drain** and **source**

What Do We Use Transistors For?

1. Amplification

It can take a small input signal and make it stronger.

Example: boosting weak audio signals in speakers, microphones, and radios.

2. Switching

It can act like an electronic switch (ON/OFF).

Example: controlling current in computers, microcontrollers, and digital circuits.

Where we use transistors:

Computers and CPUs (billions of transistors inside chips)

Amplifiers (audio systems, radios)

Power regulation circuits

Logic gates (building blocks of digital electronics)
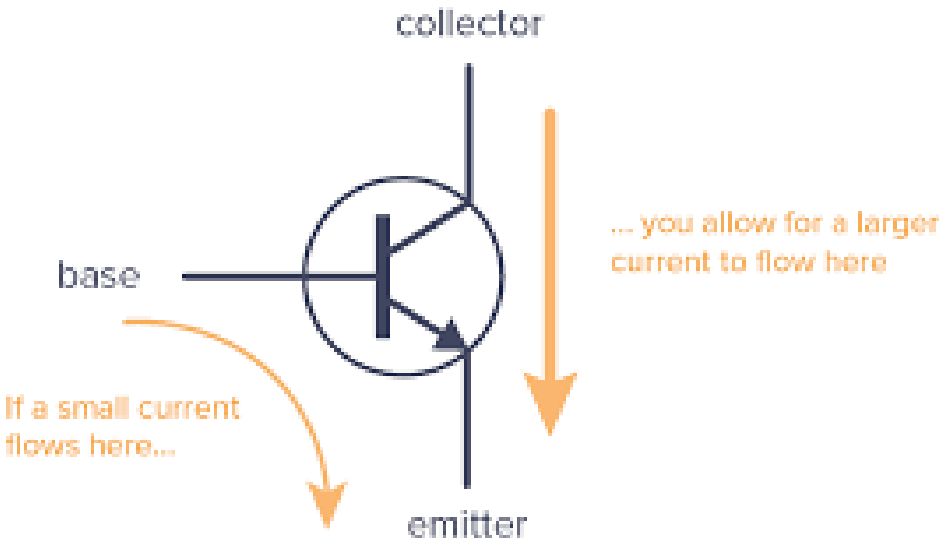
Signal processing devices