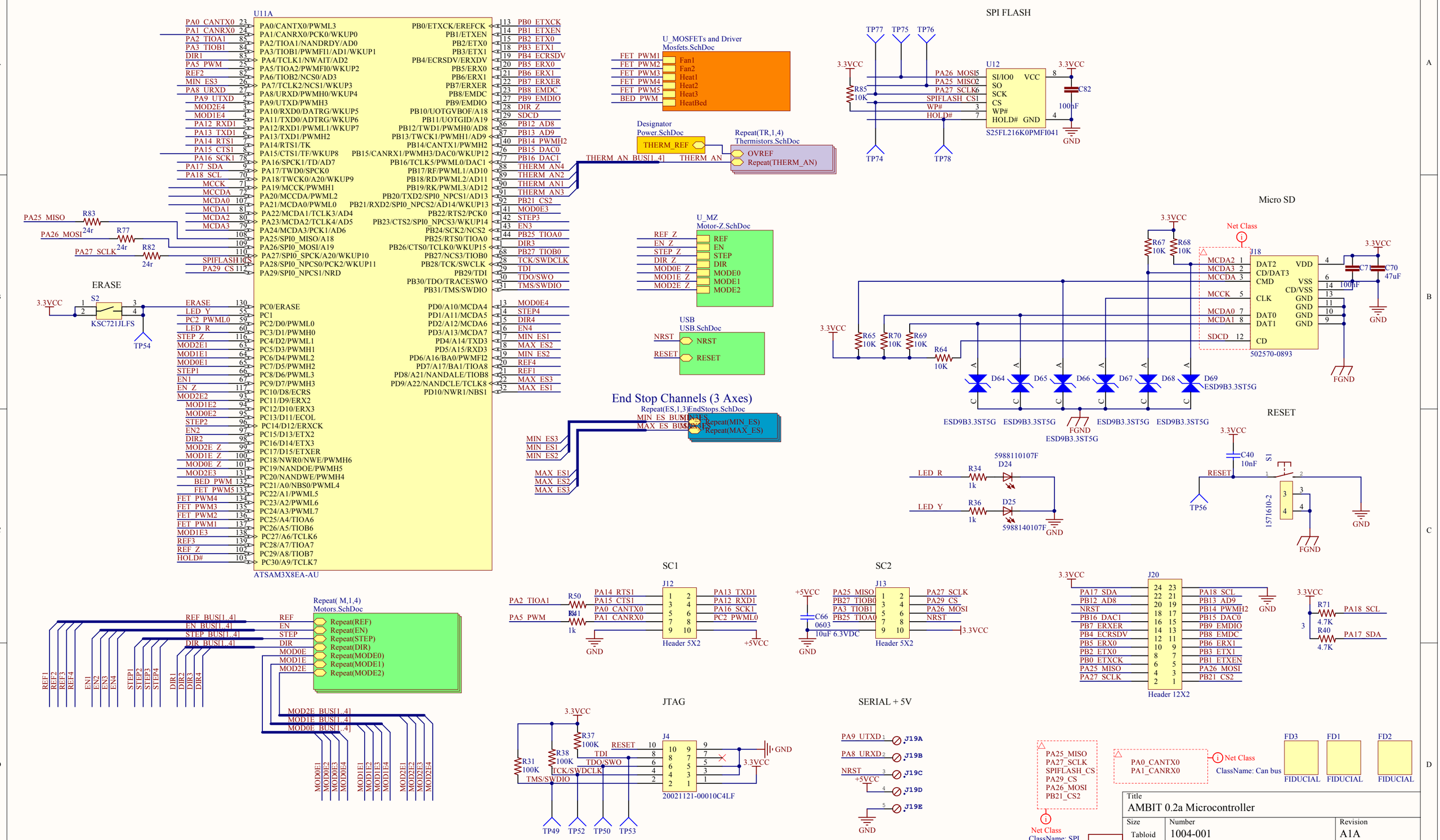
U11A
ATSAM3X8EA-AU
ERASE
S2
KSC721JLFS
TP54
3.3VCC
SPI FLASH
U12
S25FL216K0PMFI041
TP77
TP75
TP76
TP74
TP78
R85
10K
C82
100nF
GND
U_MOSFETs and Driver
Mosfets.SchDoc
Fan1
Fan2
Heat1
Heat2
Heat3
HeatBed
Designator
Power.SchDoc
THERM_REF
Repeat(TR,1,4)
Thermistors.SchDoc
OVREF
Repeat(THERM_AN)
THERM_AN_BUS[1..4]
THERM_AN
U_MZ
Motor-Z.SchDoc
REF
EN
STEP
DIR
MODE0
MODE1
MODE2
USB
USB.SchDoc
NRST
RESET
End Stop Channels (3 Axes)
Repeat(ES,1,3)EndStops.SchDoc
Repeat(MIN_ES)
Repeat(MAX_ES)
Micro SD
Net Class
J18
502570-0893
R67
10K
R68
10K
R65
10K
R70
10K
R69
10K
R64
10K
C71
100nF
C70
47uF
FGND
D64
D65
D66
D67
D68
D69
ESD9B3.3ST5G
RESET
C40
10nF
S1
1571610-2
TP56
LED_R
LED_Y
R34
1k
R36
1k
D24
D25
5988110107F
5988140107F
SC1
J12
Header 5X2
R50
R41
1k
+5VCC
SC2
J13
C66
0603
10uF 6.3VDC
J20
Header 12X2
R71
4.7K
R40
4.7K
JTAG
J4
20021121-00010C4LF
R37
100K
R38
100K
R31
100K
TP49
TP52
TP50
TP53
SERIAL + 5V
J19A
J19B
J19C
J19D
J19E
Net Class
ClassName: SPI
Net Class
ClassName: Can bus
FD3
FD1
FD2
FIDUCIAL
Title
AMBIT 0.2a Microcontroller
Size
Tabloid
Number
1004-001
Revision
A1A
Date: 11/12/2015
Sheet 1 of 8
File: C:\Users\..\Microcontroller.SchDoc
Drawn By: UltiMachine

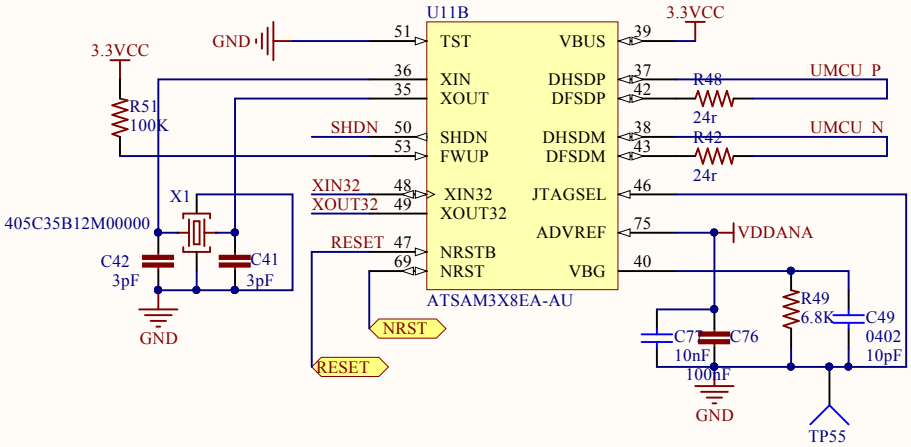

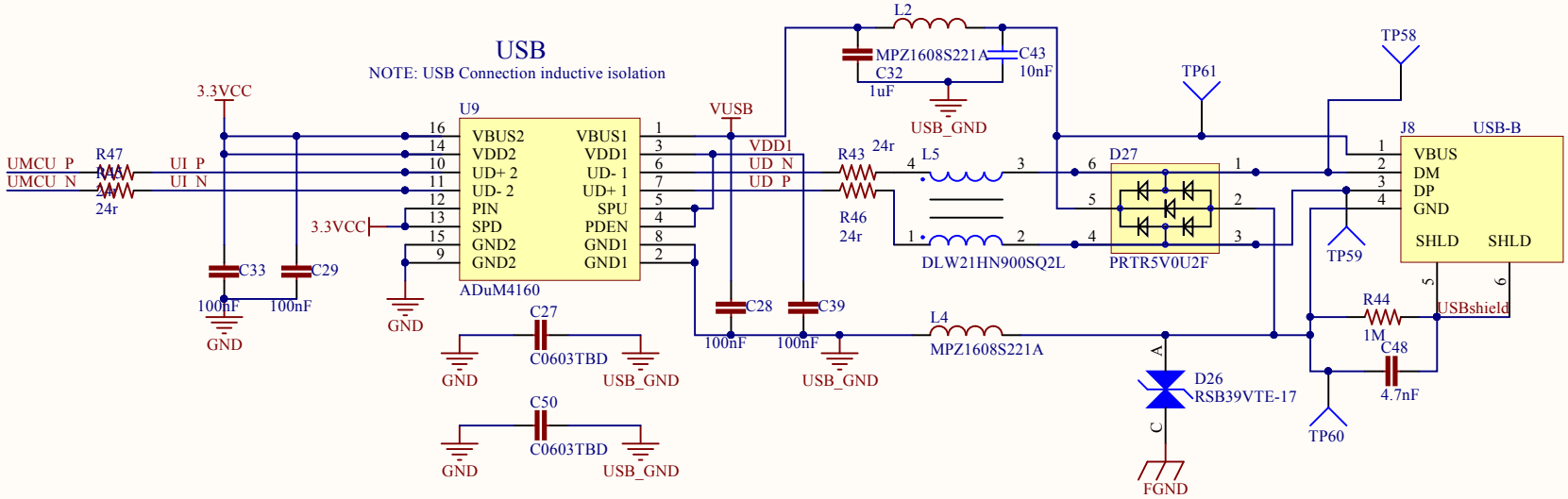

Title		
AMBIT 0.2a USB		
Size: Letter	Number: 1004-001	Revision: A1A
Date: 11/12/2015		Sheet 2 of 8
File: C:\Users\..\USB.SchDoc		Drawn By: UltiMachine

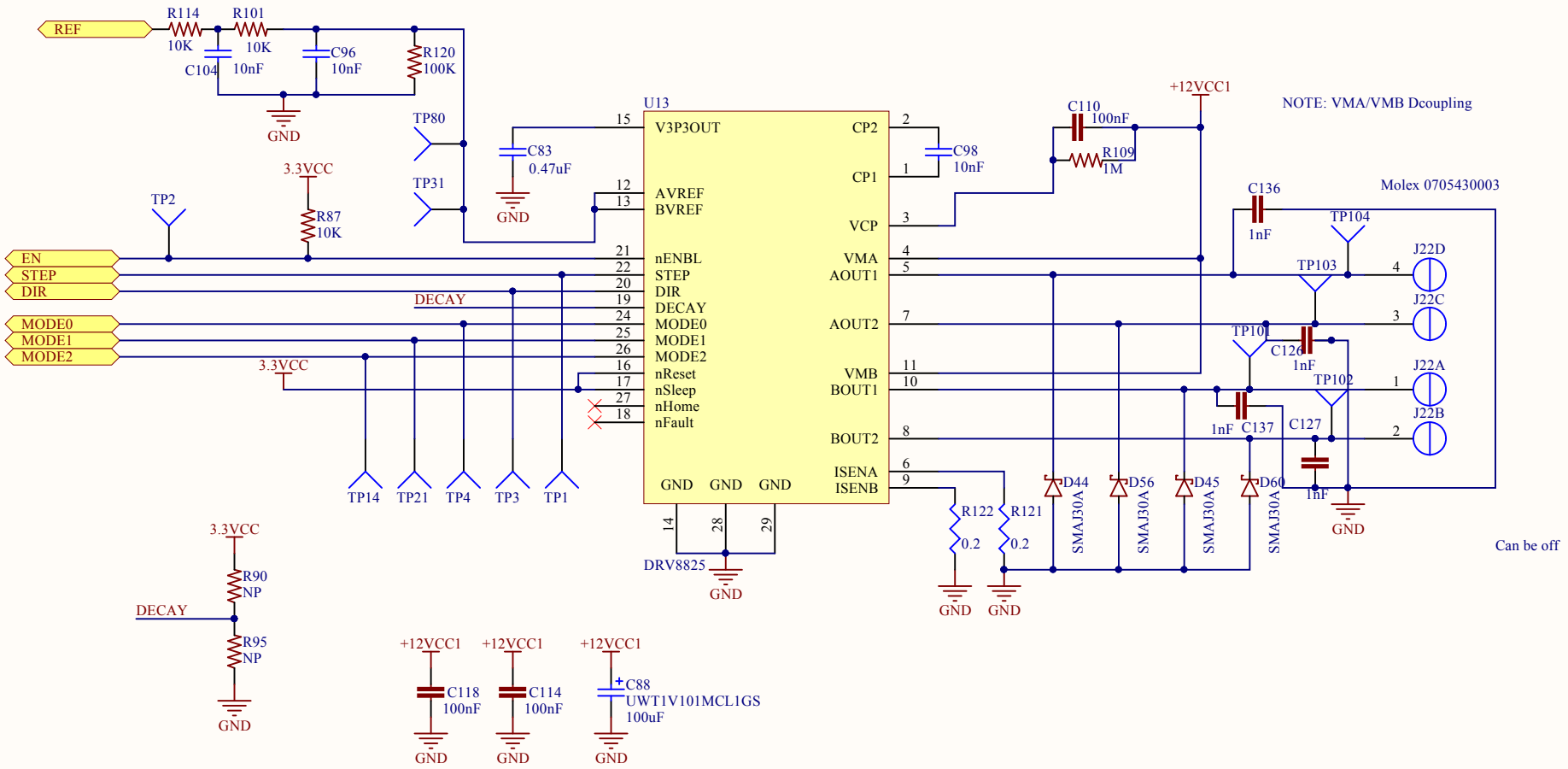

Title		
AMBIT 0.2a Motors		
Size: Letter	Number: 1004-001	Revision: A1A
Date: 11/12/2015		Sheet 3 of 8
File: C:\Users\..\Motors.SchDoc		Drawn By: UltiMachine

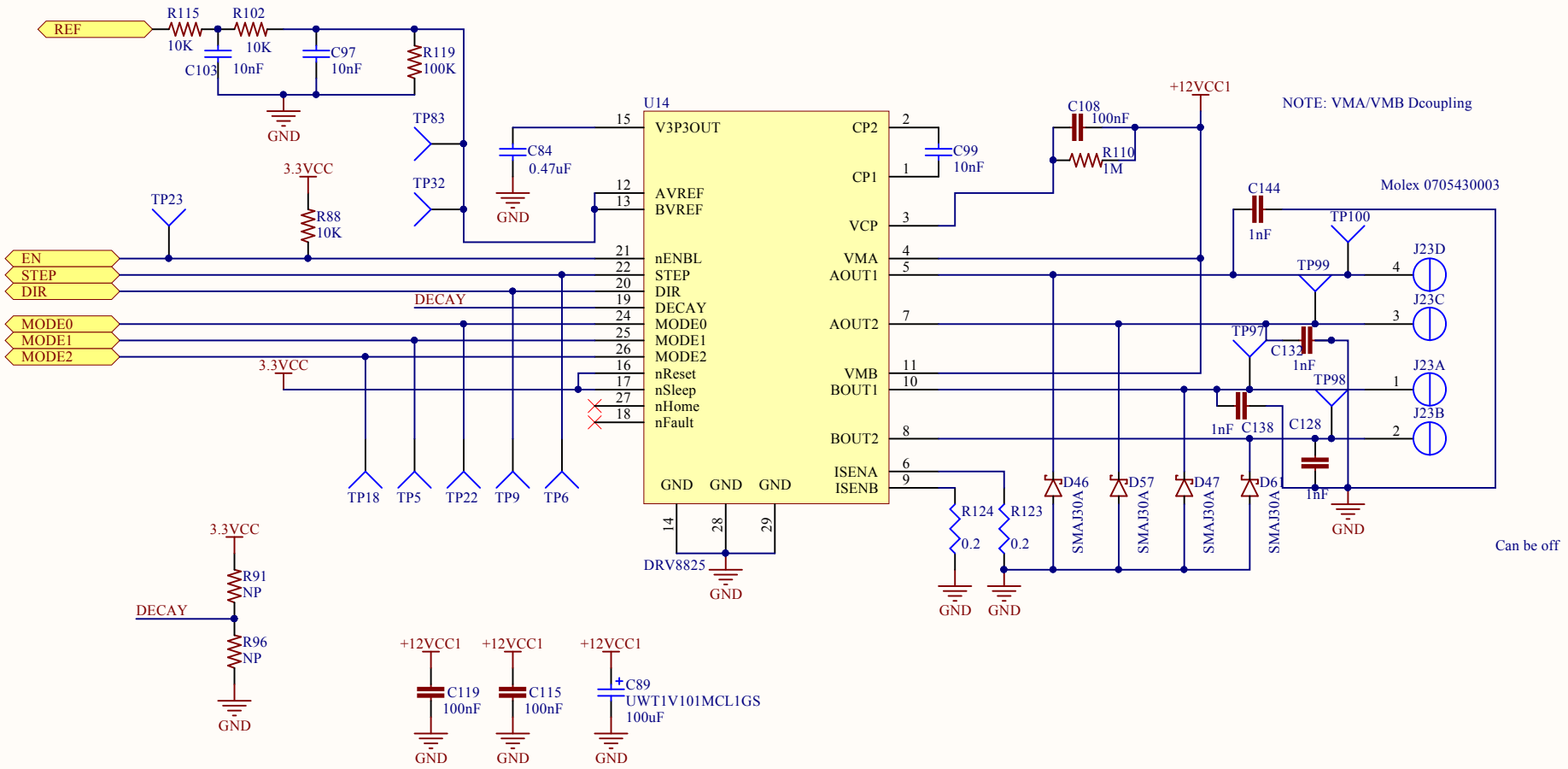

Title		
AMBIT 0.2a Motors		
Size: Letter	Number: 1004-001	Revision: A1A
Date: 11/12/2015		Sheet 3 of 8
File: C:\Users\..\Motors.SchDoc		Drawn By: UltiMachine

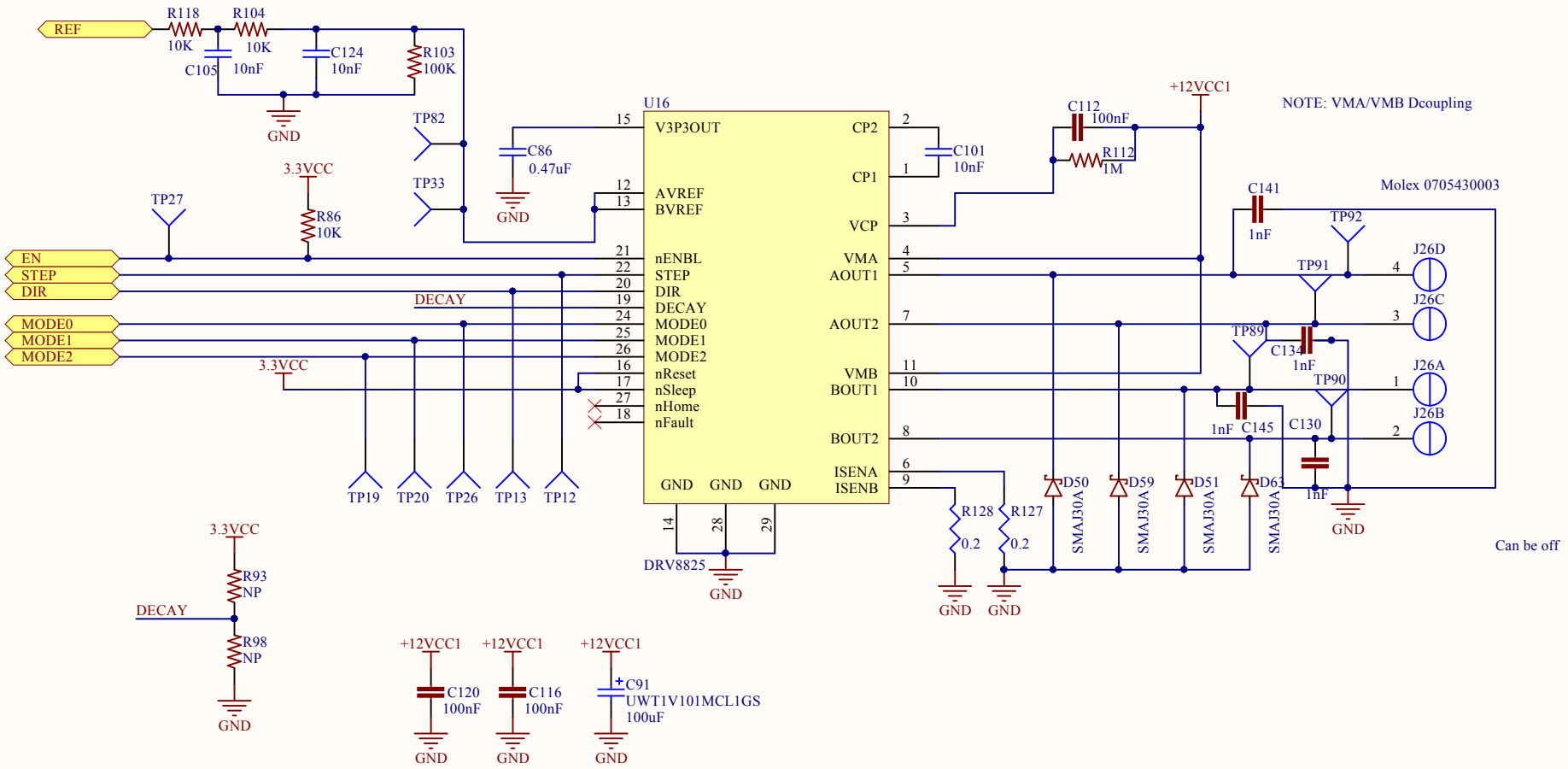

Title		
AMBIT 0.2a Motors		
Size: Letter	Number: 1004-001	Revision: A1A
Date: 11/12/2015		Sheet 3 of 8
File: C:\Users\..\Motors.SchDoc		Drawn By: UltiMachine

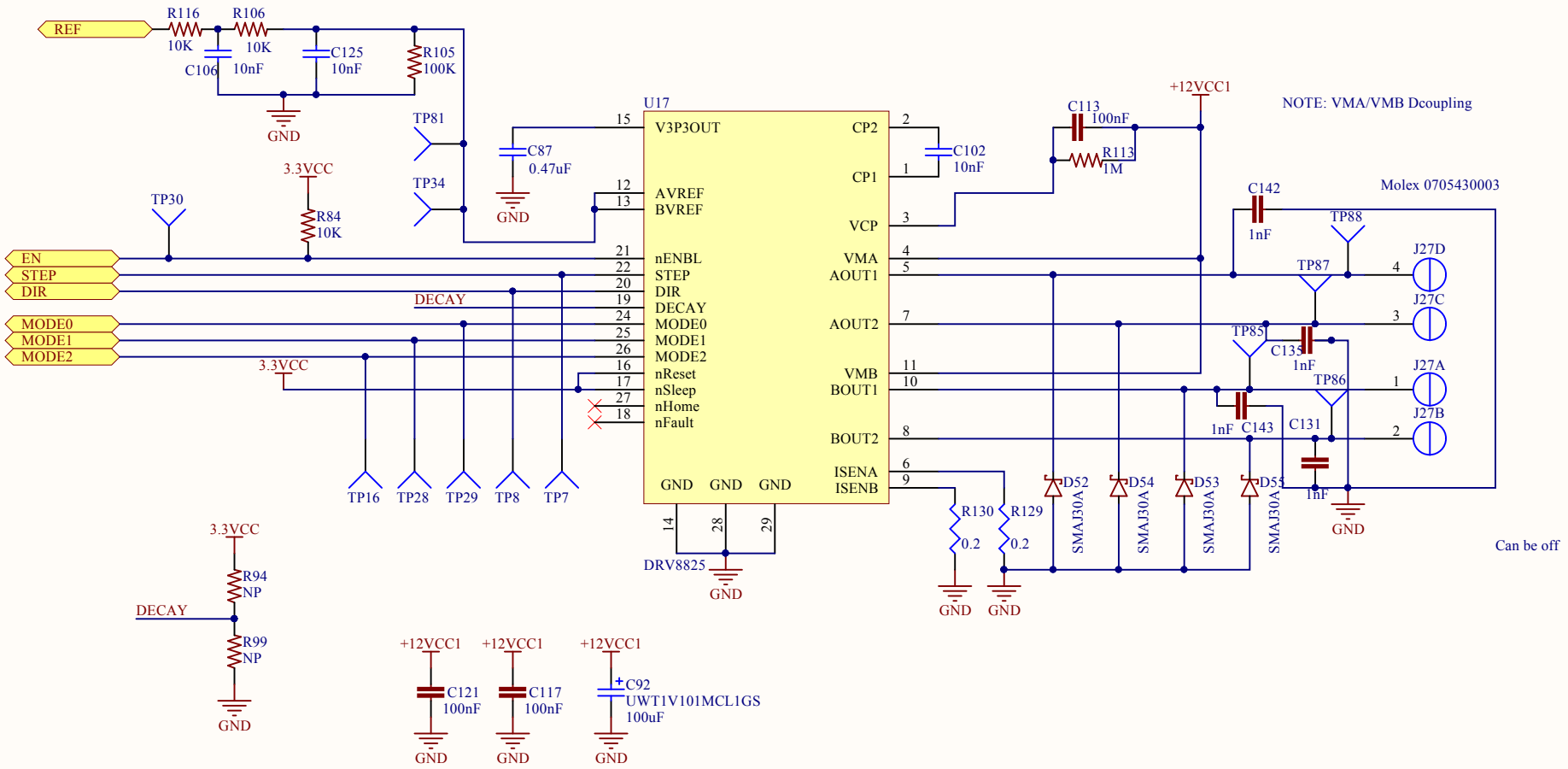

Title		
AMBIT 0.2a Motors		
Size: Letter	Number: 1004-001	Revision: A1A
Date: 11/12/2015		Sheet 3 of 8
File: C:\Users\..\Motors.SchDoc		Drawn By: UltiMachine

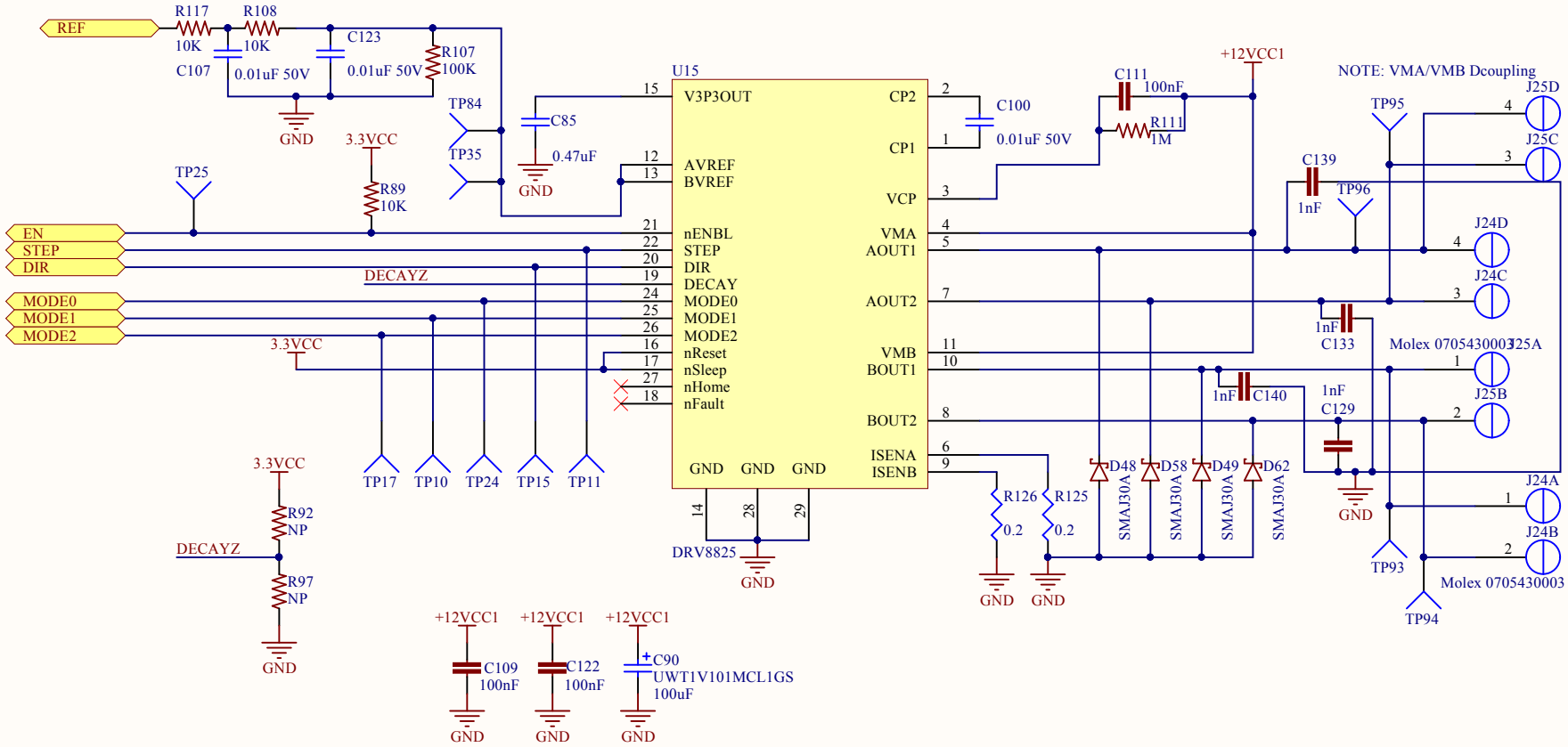

Title	AMBIT 0.2a Motor-Z	
Size: Letter	Number: 1004-001	Revision: A1A
Date: 11/12/2015		Sheet 4 of 8
File: C:\Users\..\Motor-Z.SchDoc		Drawn By: UltiMachine

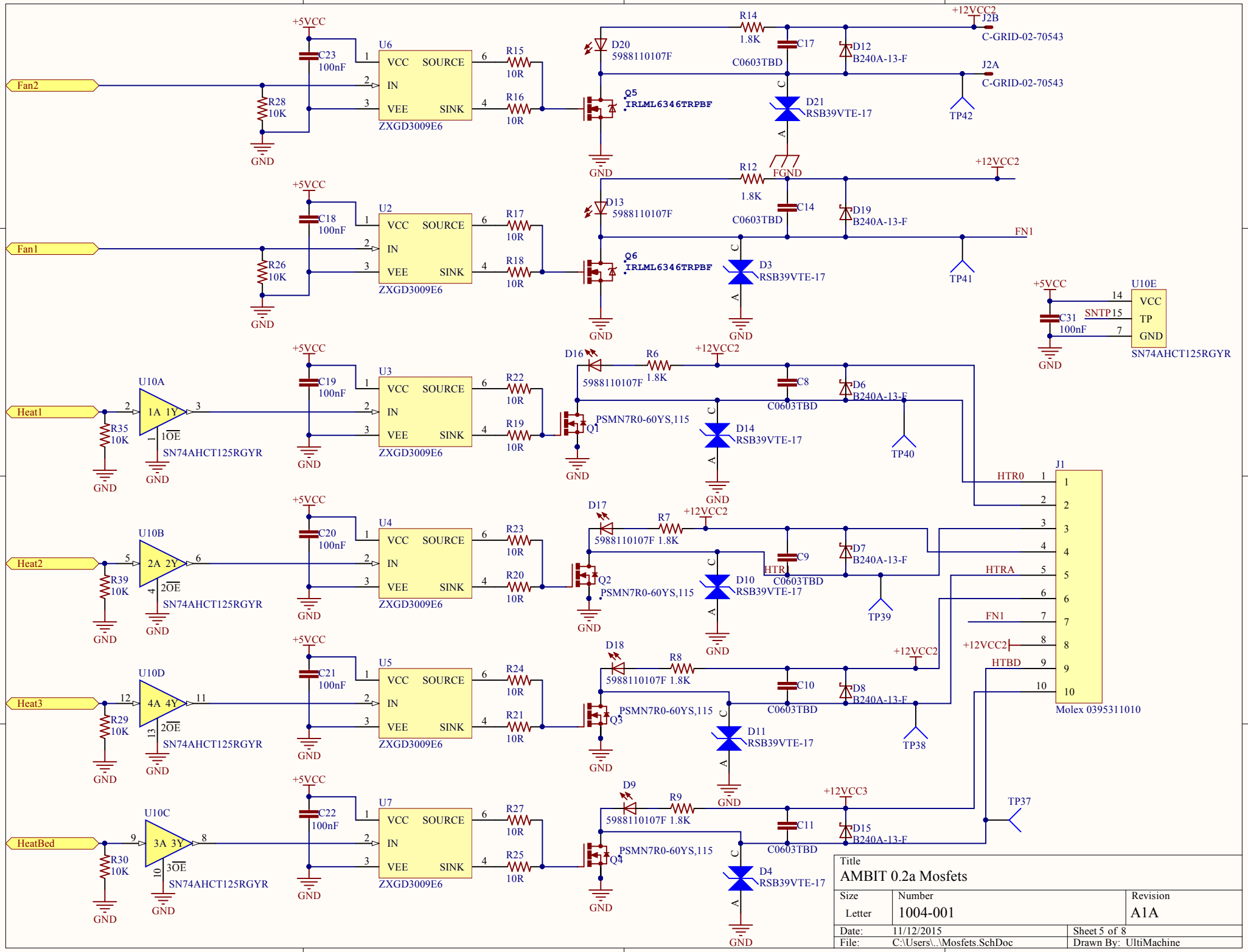

Title	AMBIT 0.2a Mosfets	
Size: Letter	Number: 1004-001	Revision: A1A
Date: 11/12/2015		Sheet 5 of 8
File: C:\Users\..\Mosfets.SchDoc		Drawn By: UltiMachine

Thermistor Channel

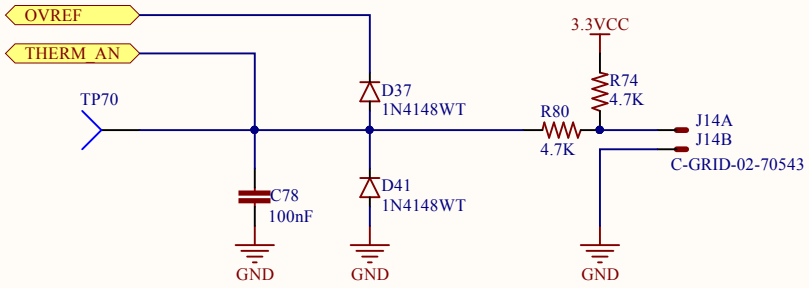

Title	AMBIT 0.2a Thermistors	
Size: Letter	Number: 1004-001	Revision: A1A
Date: 11/12/2015		Sheet 6 of 8
File: C:\Users\..\Thermistors.SchDoc		Drawn By: UltiMachine

Thermistor Channel

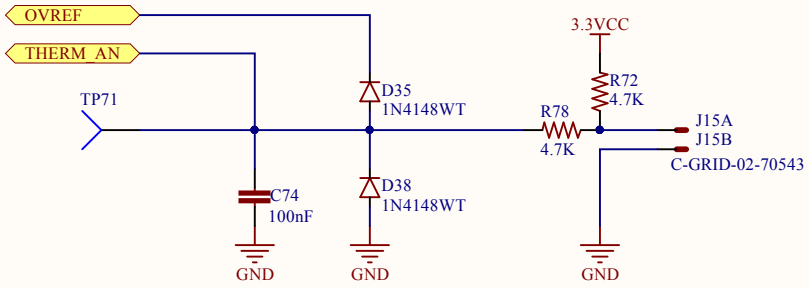

Title	AMBIT 0.2a Thermistors	
Size: Letter	Number: 1004-001	Revision: A1A
Date: 11/12/2015		Sheet 6 of 8
File: C:\Users\..\Thermistors.SchDoc		Drawn By: UltiMachine

Thermistor Channel

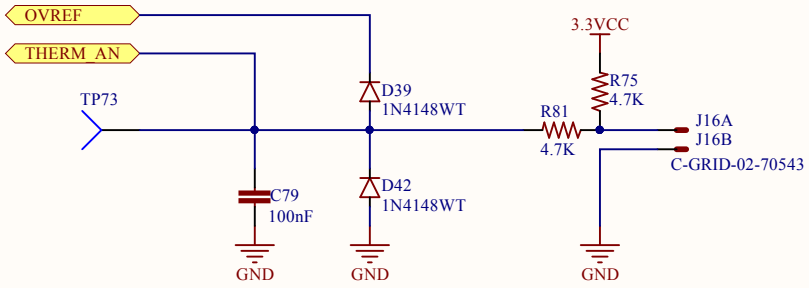

Title	AMBIT 0.2a Thermistors	
Size: Letter	Number: 1004-001	Revision: A1A
Date: 11/12/2015		Sheet 6 of 8
File: C:\Users\..\Thermistors.SchDoc		Drawn By: UltiMachine

Thermistor Channel

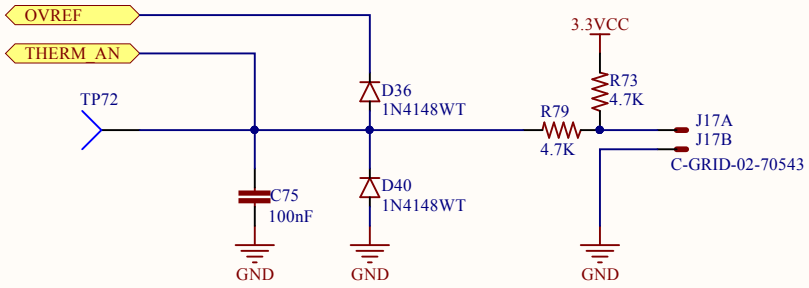

Title	AMBIT 0.2a Thermistors	
Size: Letter	Number: 1004-001	Revision: A1A
Date: 11/12/2015		Sheet 6 of 8
File: C:\Users\..\Thermistors.SchDoc		Drawn By: UltiMachine

End Stop Channel

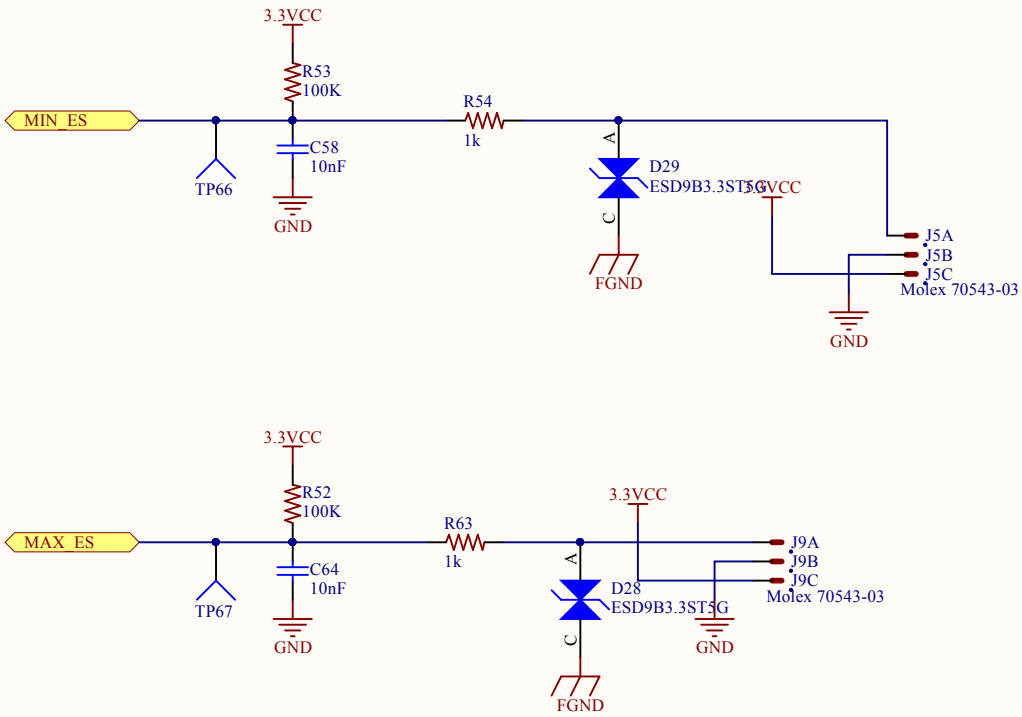

Title	AMBIT 0.2a Endstops	
Size: Letter	Number: 1004-001	Revision: A1A
Date: 11/12/2015		Sheet 7 of 8
File: C:\Users\..\EndStops.SchDoc		Drawn By: UltiMachine

End Stop Channel

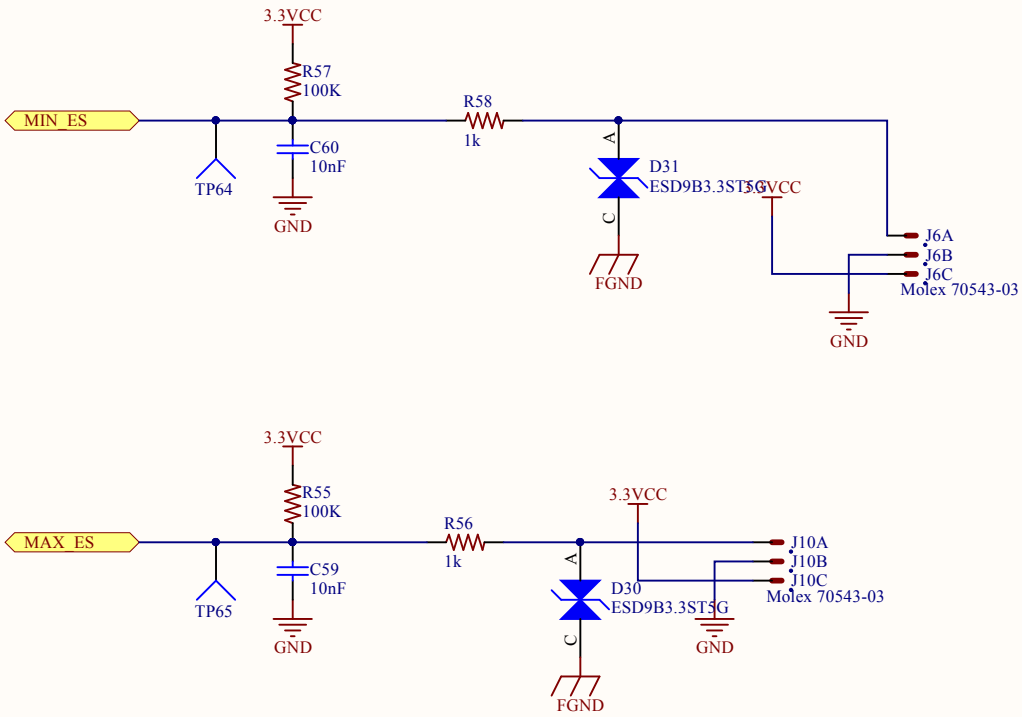

Title	AMBIT 0.2a Endstops	
Size: Letter	Number: 1004-001	Revision: A1A
Date: 11/12/2015		Sheet 7 of 8
File: C:\Users\..\EndStops.SchDoc		Drawn By: UltiMachine

End Stop Channel

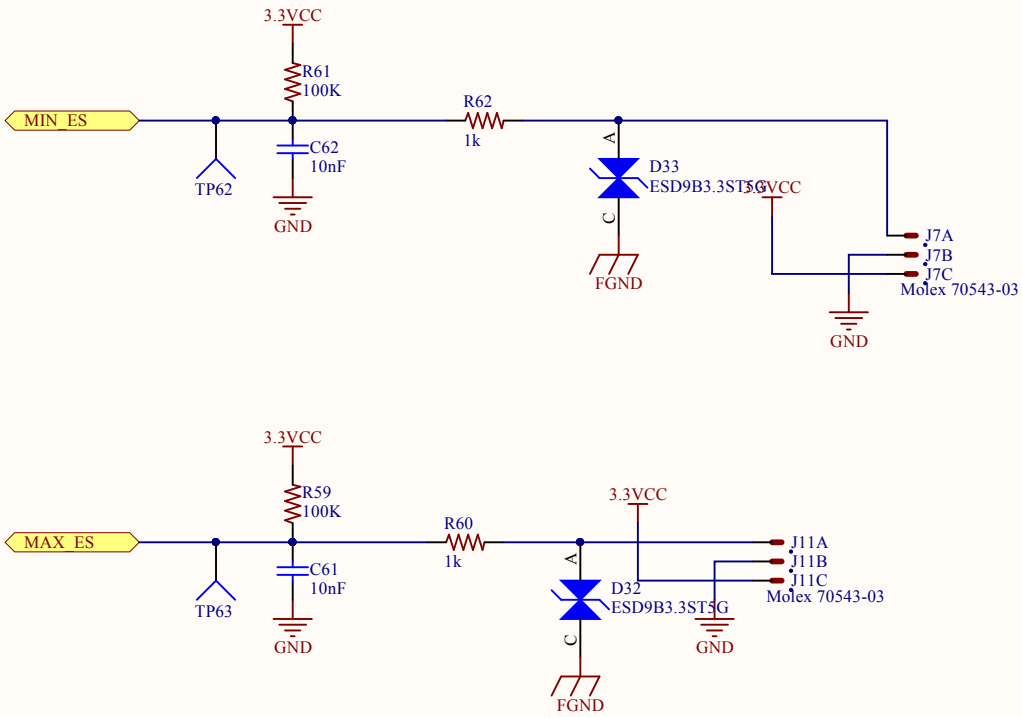

Title	AMBIT 0.2a Endstops	
Size: Letter	Number: 1004-001	Revision: A1A
Date: 11/12/2015		Sheet 7 of 8
File: C:\Users\..\EndStops.SchDoc		Drawn By: UltiMachine

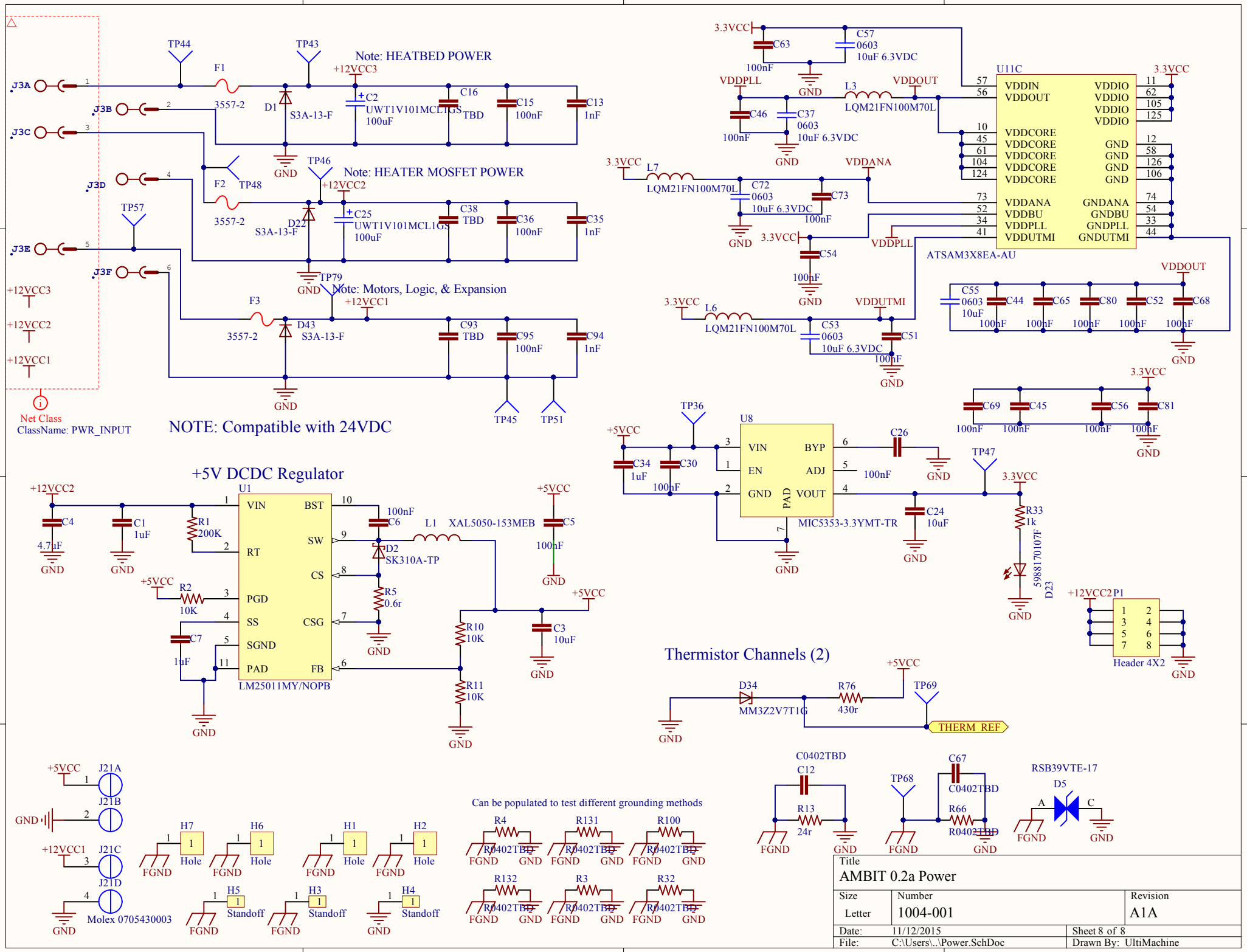
Note: HEATBED POWER
Note: HEATER MOSFET POWER
Note: Motors, Logic, & Expansion
NOTE: Compatible with 24VDC
Net Class
ClassName: PWR_INPUT
+5V DCDC Regulator
LM25011MY/NOPB
XAL5050-153MEB
SK310A-TP
ATSAM3X8EA-AU
MIC5353-3.3YMT-TR
Header 4X2
Thermistor Channels (2)
THERM_REF
Molex 0705430003
Can be populated to test different grounding methods
Title
AMBIT 0.2a Power
Size
Letter
Number
1004-001
Revision
A1A
Date: 11/12/2015
Sheet 8 of 8
File: C:\Users\..\Power.SchDoc
Drawn By: UltiMachine

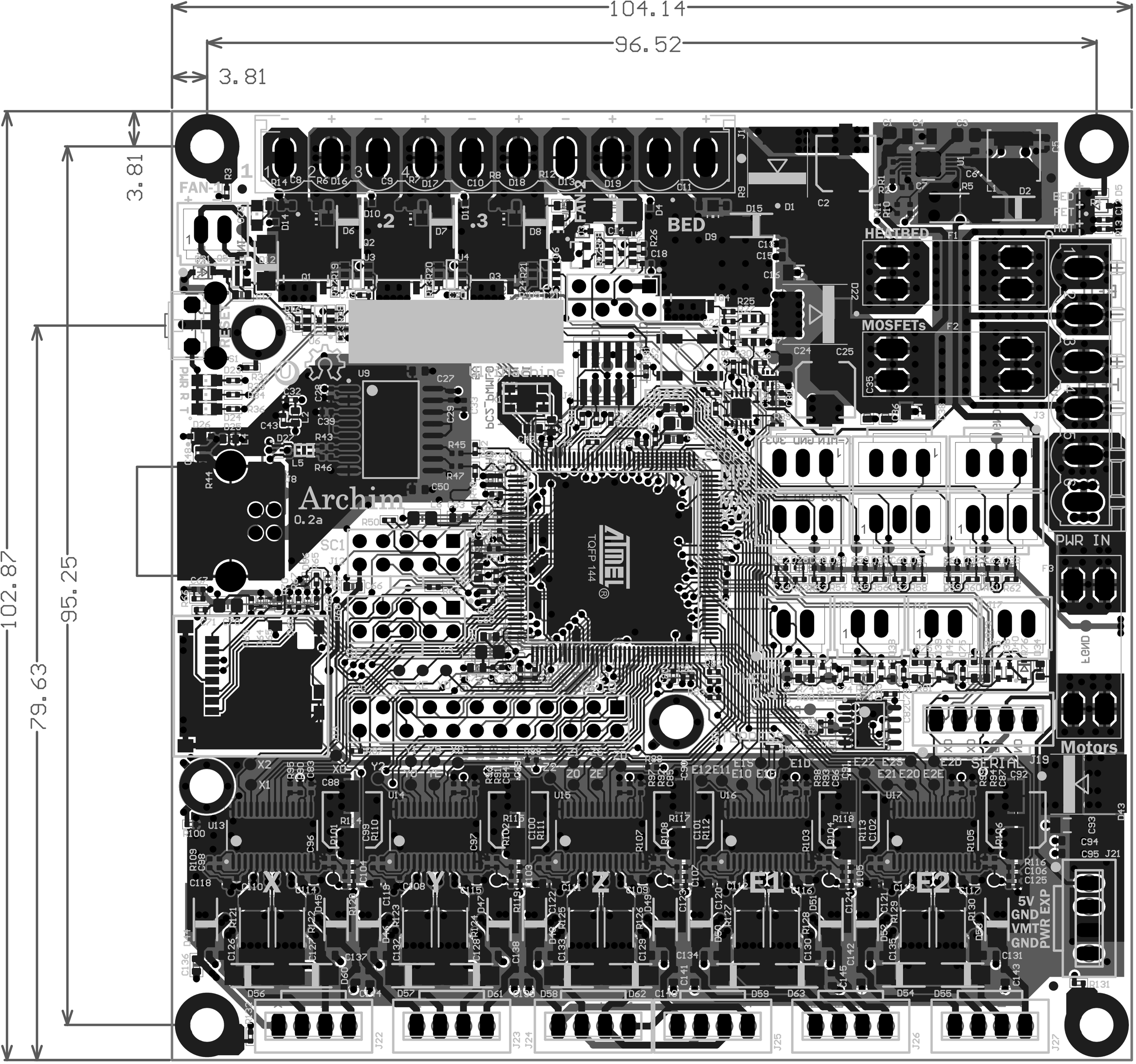
104.14
96.52
3.81
3.81
102.87
95.25
79.63
FAN-1
FAN-2
BED
HEATBED
MOSFETs
BED FET
HOT
PWR IN
Motors
SERIAL
Archim
0.2a
TQFP 144
X
Y
Z
E1
E2
5V
GND
VMT
GND
PWR EXP

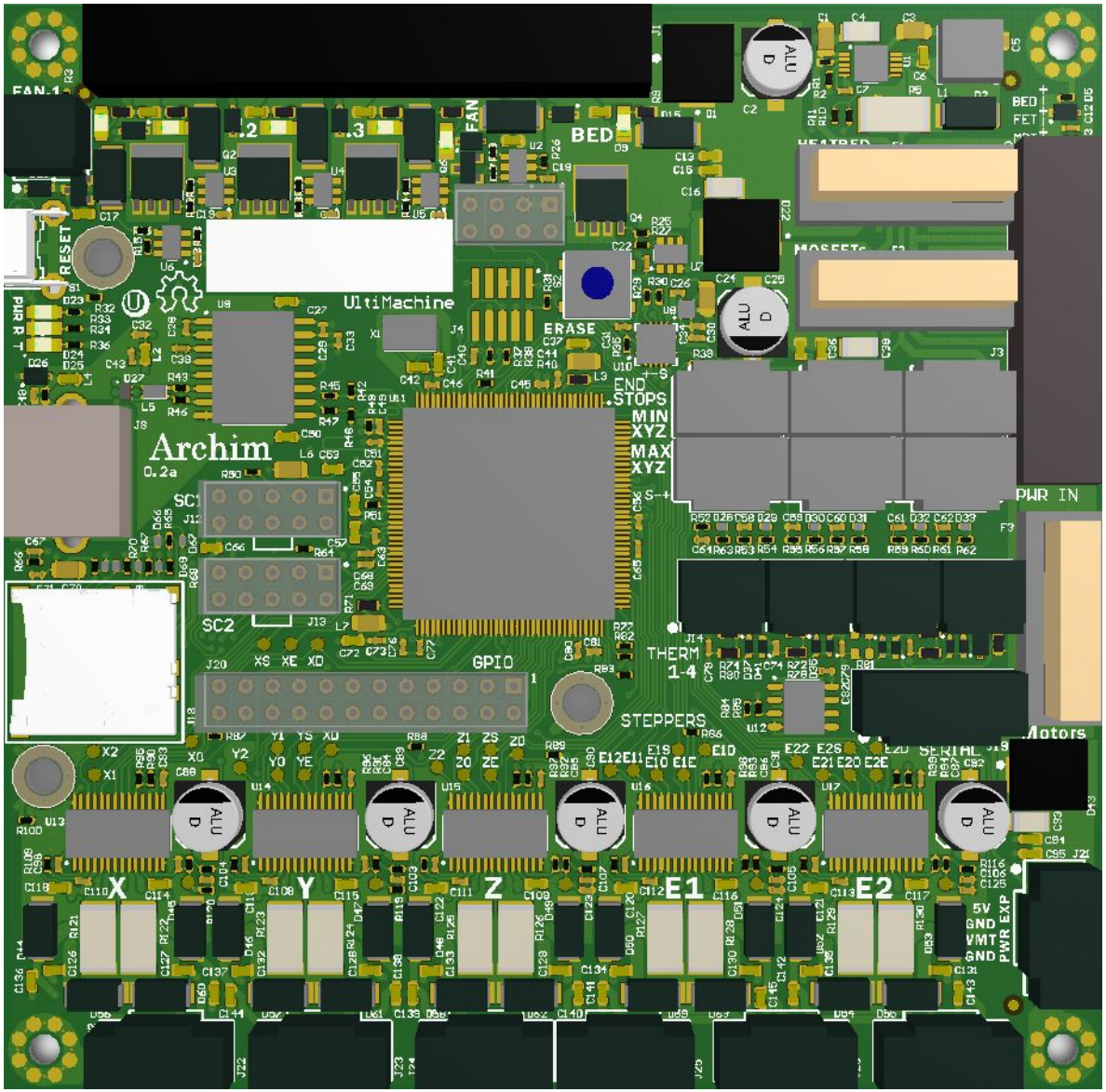
Archim
0.2a
UltiMachine
FAN
BED
ERASE
RESET
END STOPS
MIN XYZ
MAX XYZ
SC1
SC2
GPIO
THERM 1-4
STEPPERS
PWR IN
Motors
X
Y
Z
E1
E2
5V
GND
VMT
GND
PWR EXP