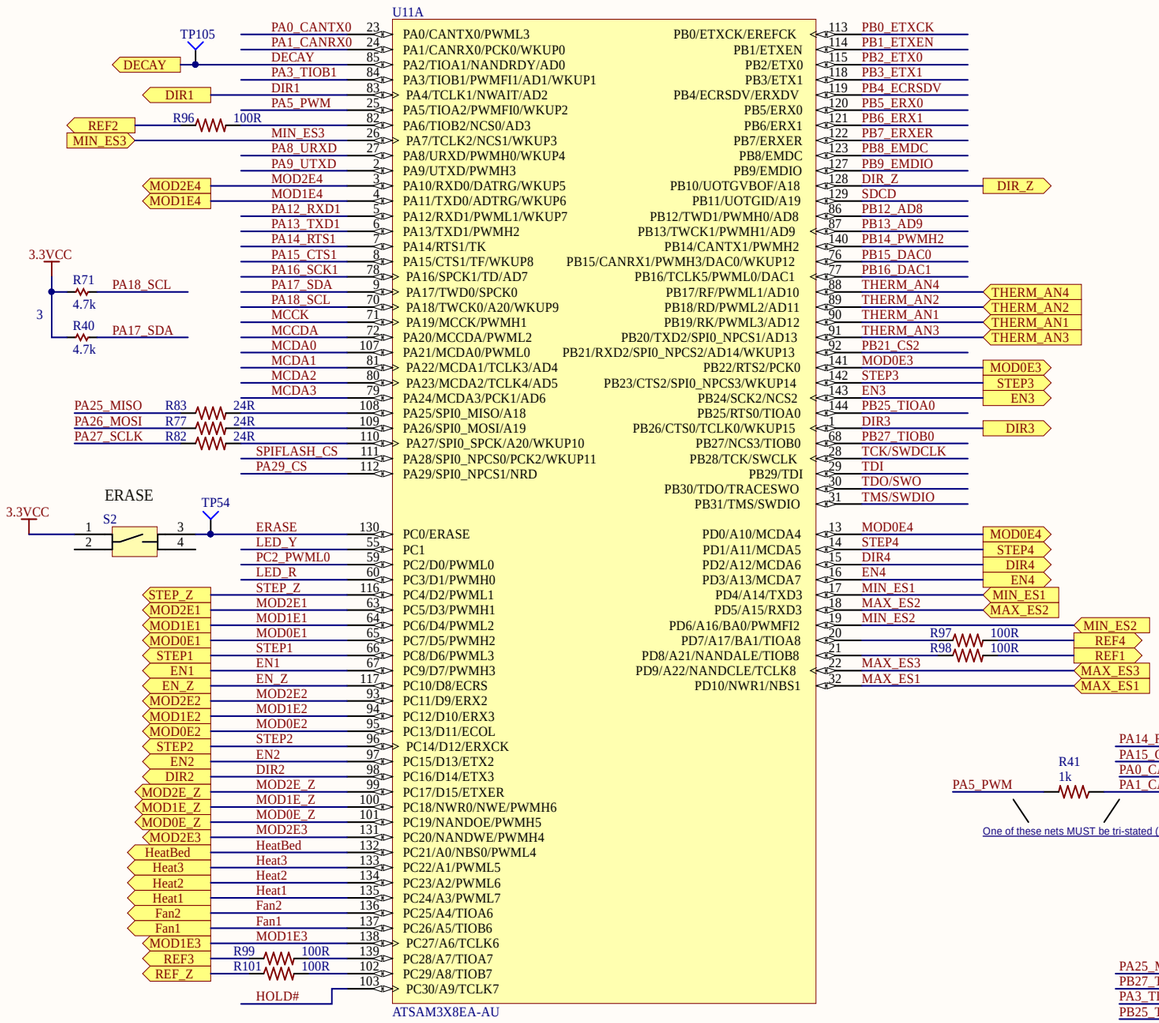

Title	Archim 0.4b Microcontroller		
Size	Number		Revision
Tabloid	1004-001		0.4b
Date:	1/24/2017	Sheet 1 of 11	
File:	C:\Users\..\Microcontroller.SchDoc	Drawn By:	UltiMachine

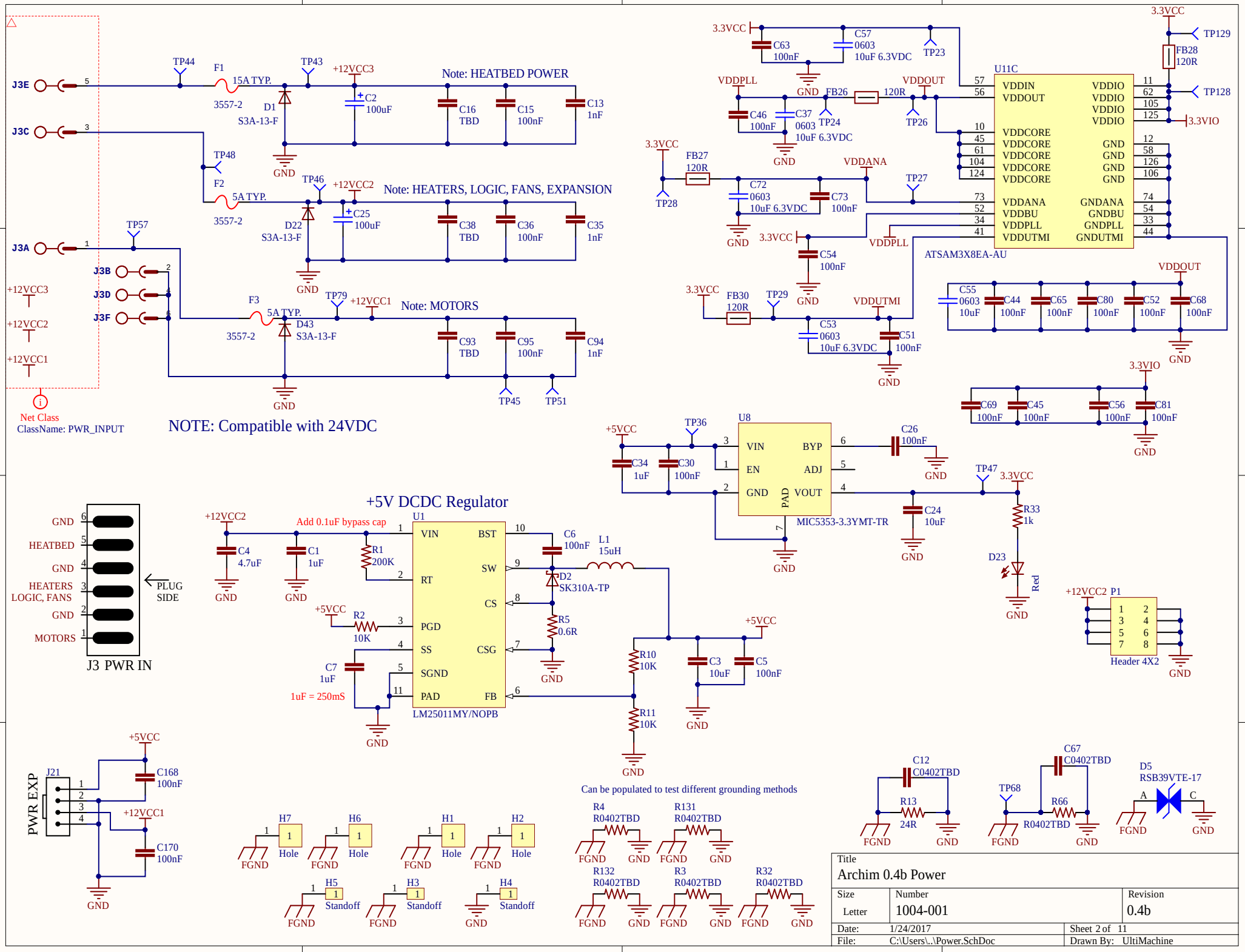

Title	Archim 0.4b Power	
Size: Letter	Number: 1004-001	Revision: 0.4b
Date: 1/24/2017		Sheet 2 of 11
File: C:\Users\..\Power.SchDoc		Drawn By: UltiMachine

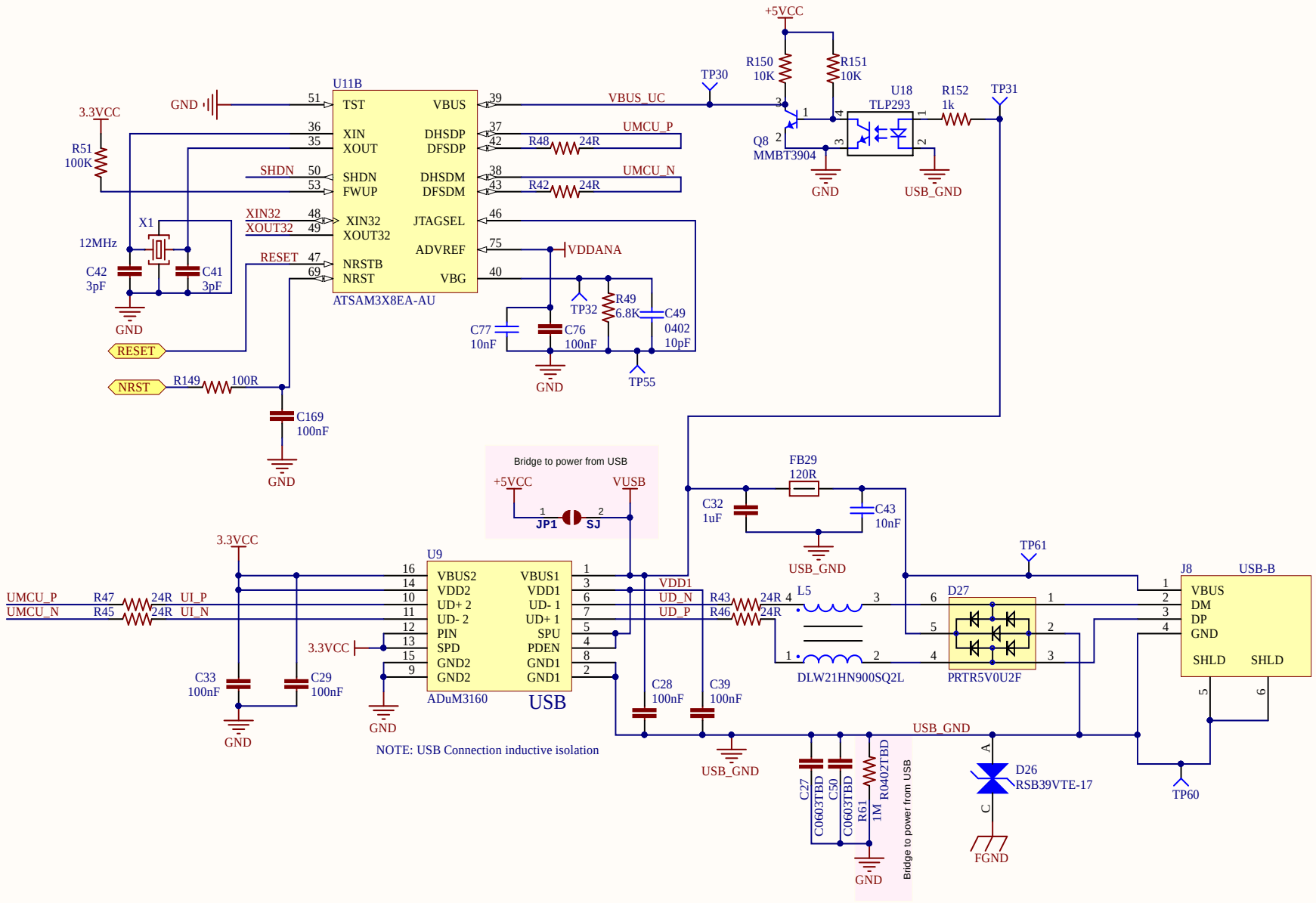

Title	Archim 0.4b USB	
Size: Letter	Number: 1004-001	Revision: 0.4b
Date: 1/24/2017		Sheet 3 of 11
File: C:\Users\..\USB.SchDoc		Drawn By: UltiMachine

End Stop Channels

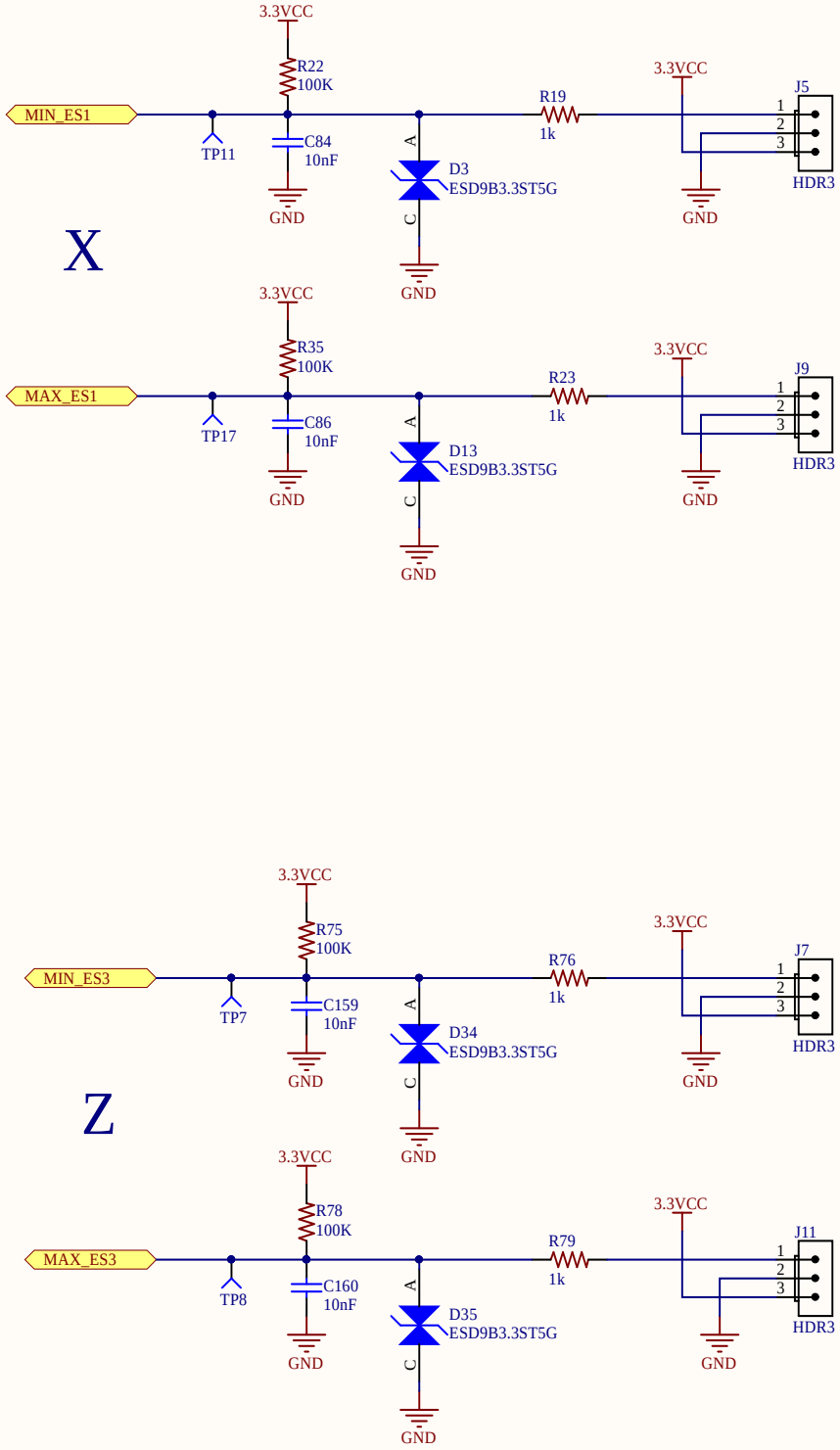

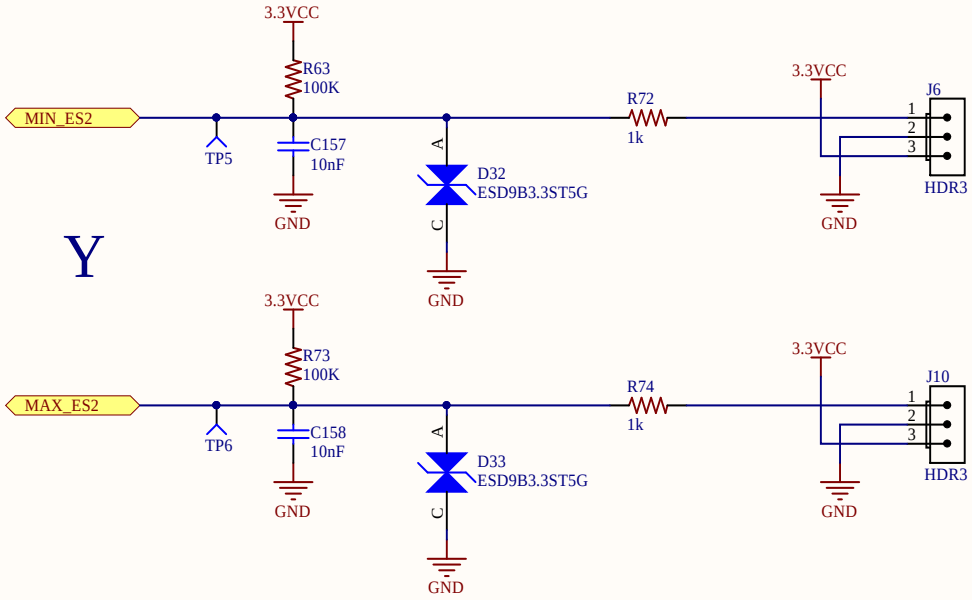

	X	Y	Z	
MIN	J5	J6	J7	Connector Layout
MAX	J9	J10	J11	

Title: Archim 0.4b Endstops		
Size: Letter	Number: 1004-001	Revision: 0.4b
Date: 1/24/2017		Sheet 4 of 11
File: C:\Users\..\EndStops.SchDoc		Drawn By: UltiMachine

Motor-X

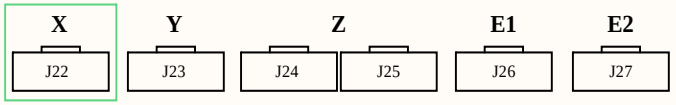

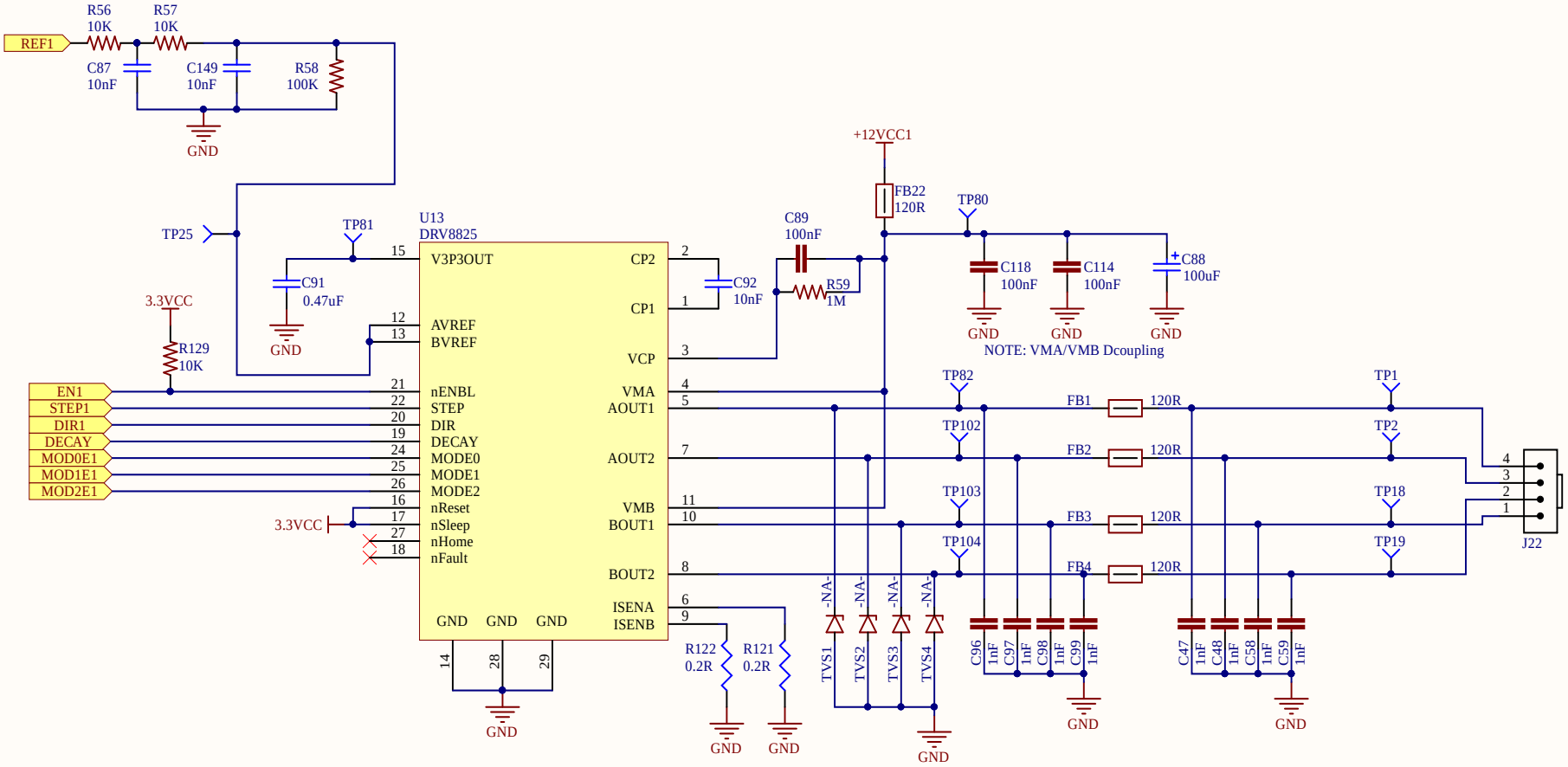

Title		
Archim 0.4b Motor-X		
Size: Letter	Number: 1004-001	Revision: 0.4b
Date: 1/24/2017		Sheet 5 of 11
File: C:\Users\..\Motor-X.SchDoc		Drawn By: UltiMachine

Motor-Y

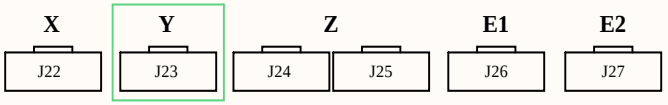

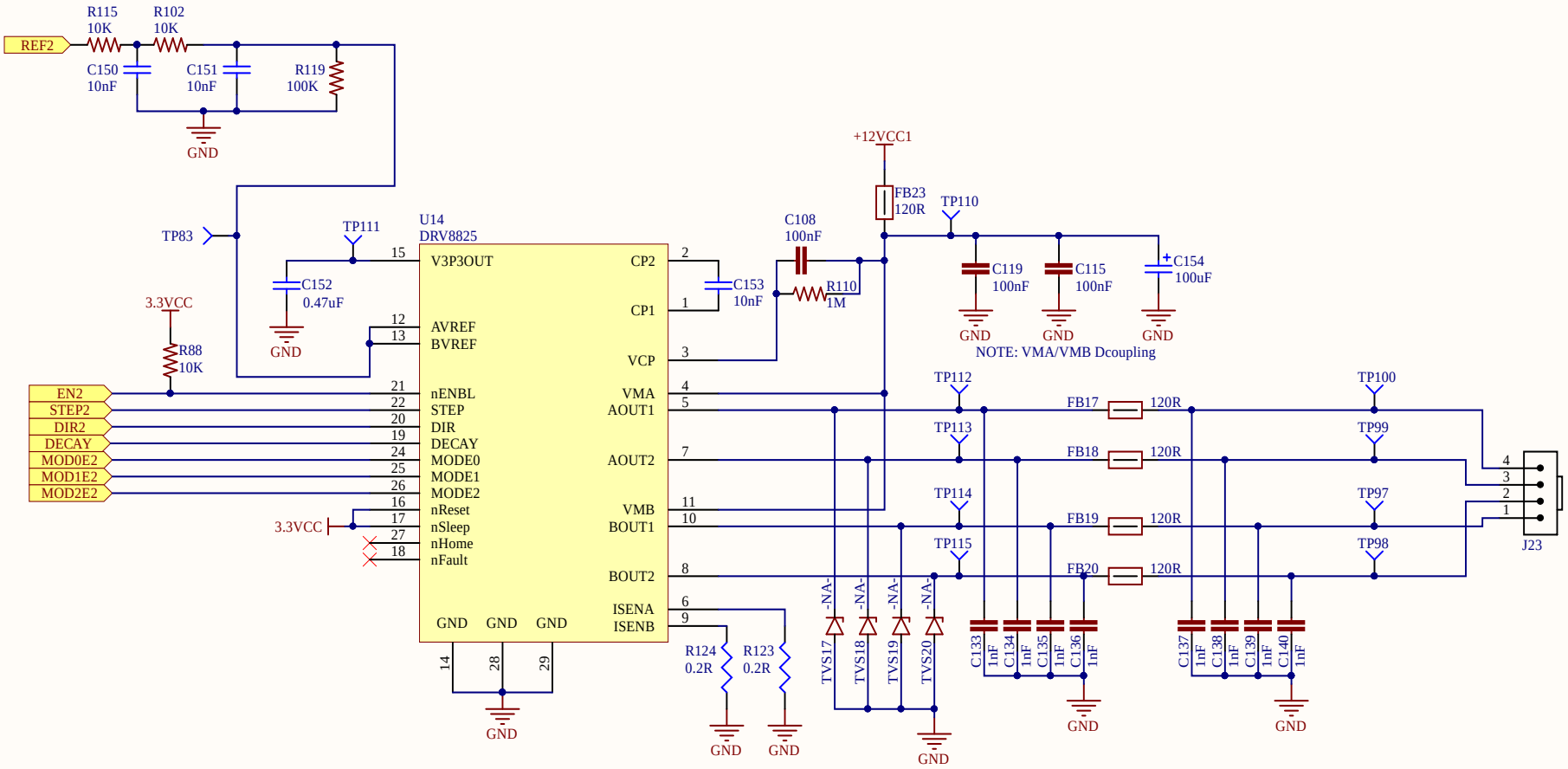

Title		
Archim 0.4b Motor-X		
Size: Letter	Number: 1004-001	Revision: 0.4b
Date: 1/24/2017		Sheet 6 of 11
File: C:\Users\..\Motor-Y.SchDoc		Drawn By: UltiMachine

Motor-Z

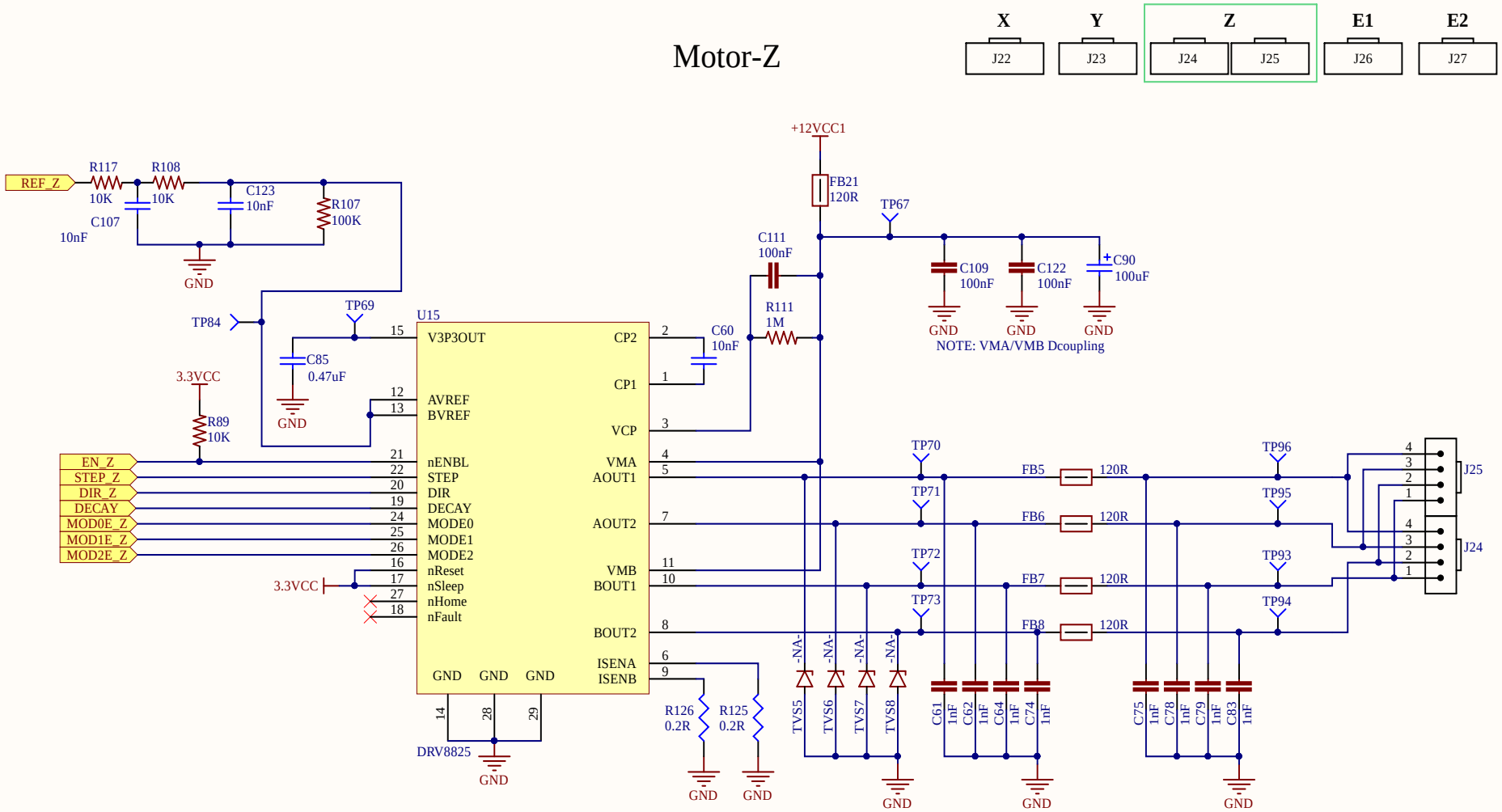

Title		
Archim 0.4b Motor-Z		
Size: Letter	Number: 1004-001	Revision: 0.4b
Date: 1/24/2017	Sheet 7 of 11	
File: C:\Users\..\Motor-Z.SchDoc	Drawn By: UltiMachine	

Motor-E1

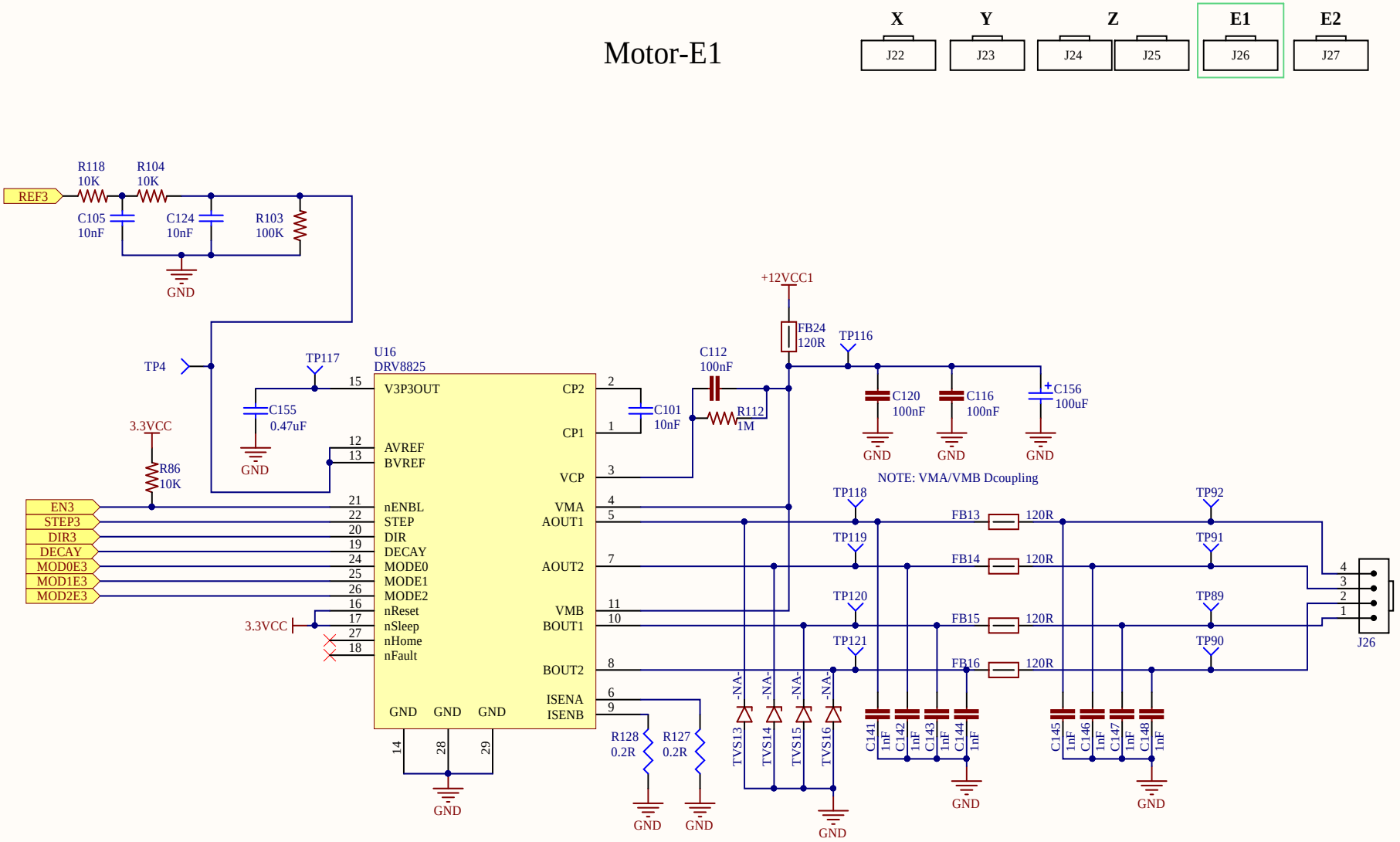

Title	Archim 0.4b Motor-X	
Size: Letter	Number: 1004-001	Revision: 0.4b
Date: 1/24/2017		Sheet 8 of 11
File: C:\Users\..\Motor-E1.SchDoc		Drawn By: UltiMachine

Motor-E2

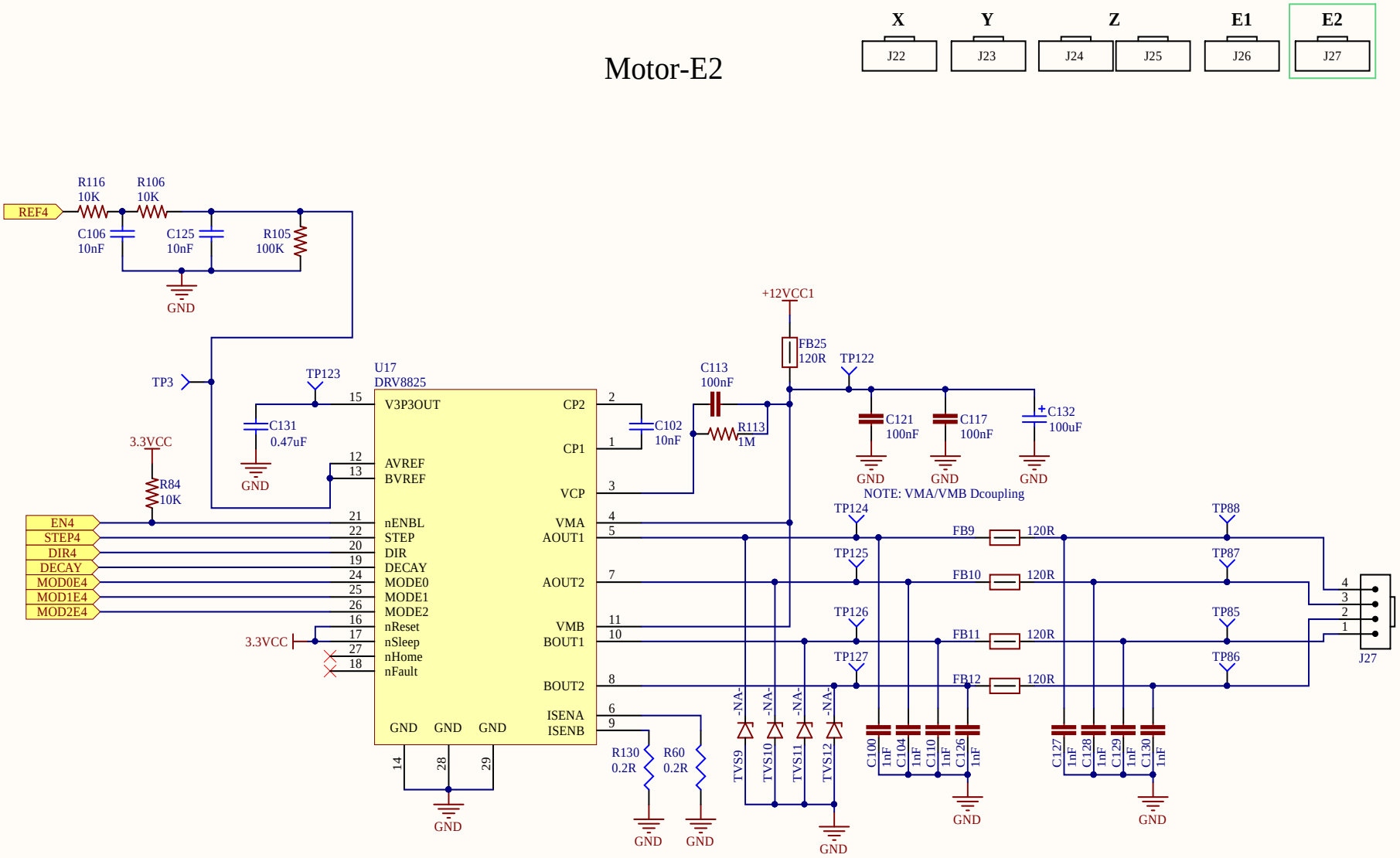

Title		
Archim 0.4b Motor-X		
Size: Letter	Number: 1004-001	Revision: 0.4b
Date: 1/24/2017		Sheet 9 of 11
File: C:\Users\..\Motor-E2.SchDoc		Drawn By: UltiMachine

Thermistor Channels

Thermistor Connector Layout

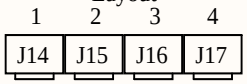

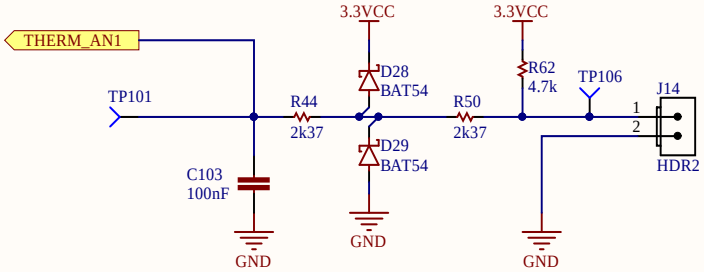

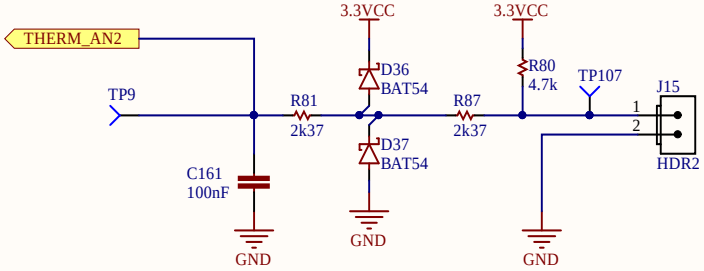

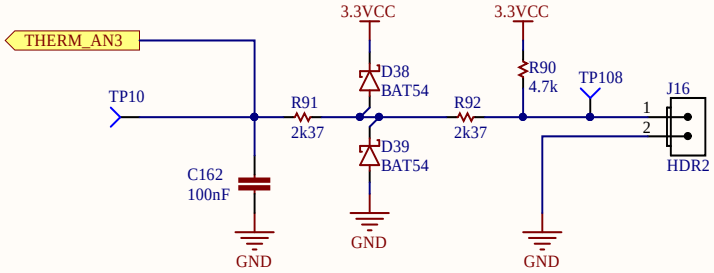

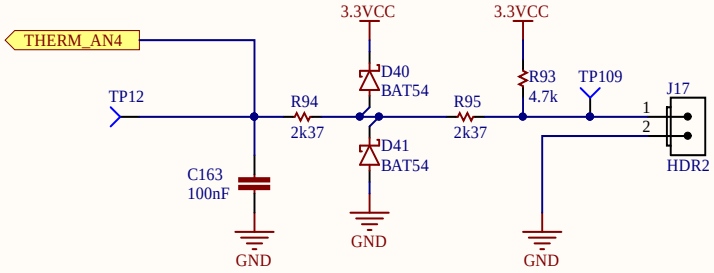

Title: Archim 0.4b Thermistors		
Size: Letter	Number: 1004-001	Revision: 0.4b
Date: 1/24/2017		Sheet 10 of 11
File: C:\Users\..\Thermistors.SchDoc		Drawn By: UltiMachine

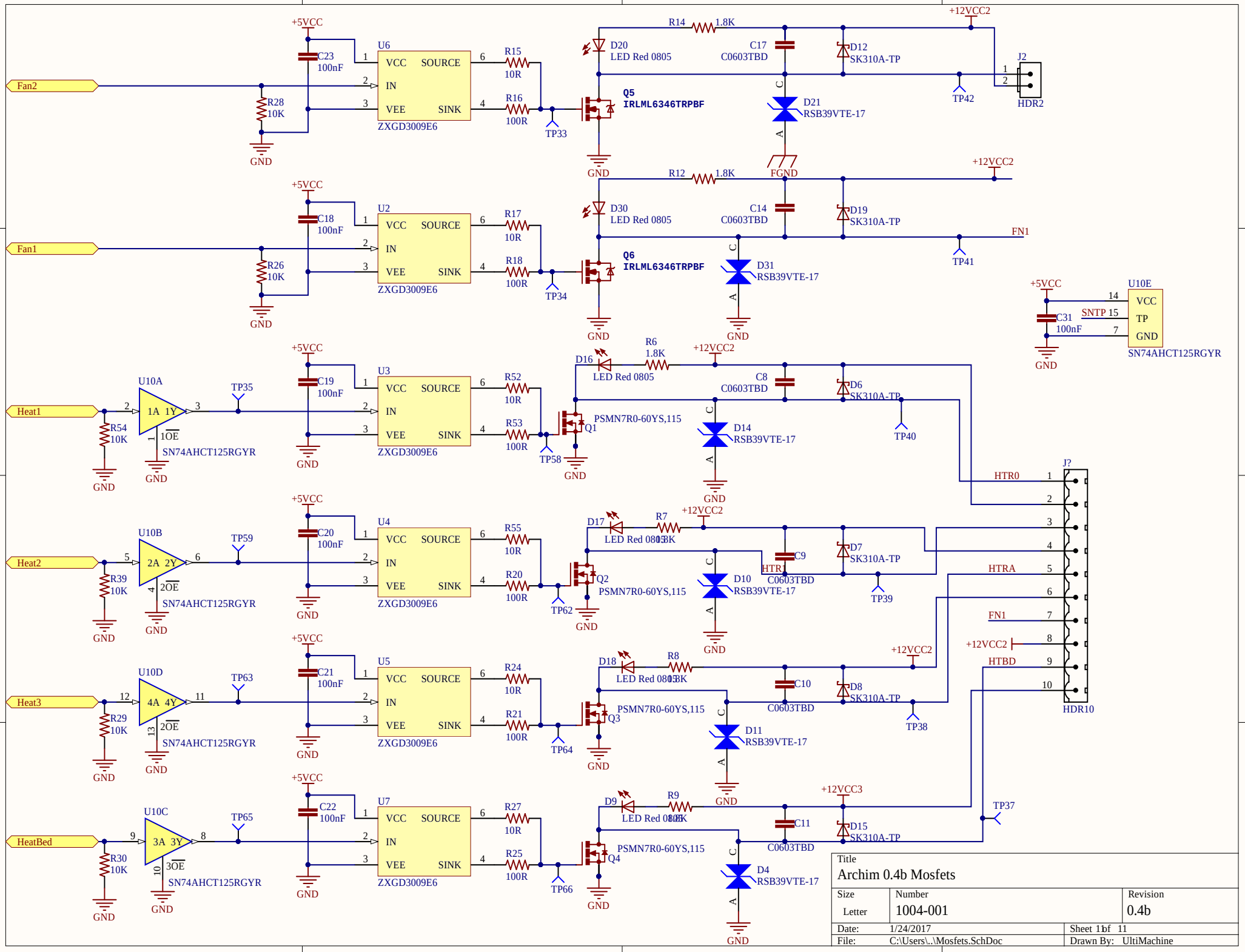

Title		
Archim 0.4b Mosfets		
Size: Letter	Number: 1004-001	Revision: 0.4b
Date: 1/24/2017	Sheet 11bf 11	
File: C:\Users\..\Mosfets.SchDoc	Drawn By: UltiMachine	