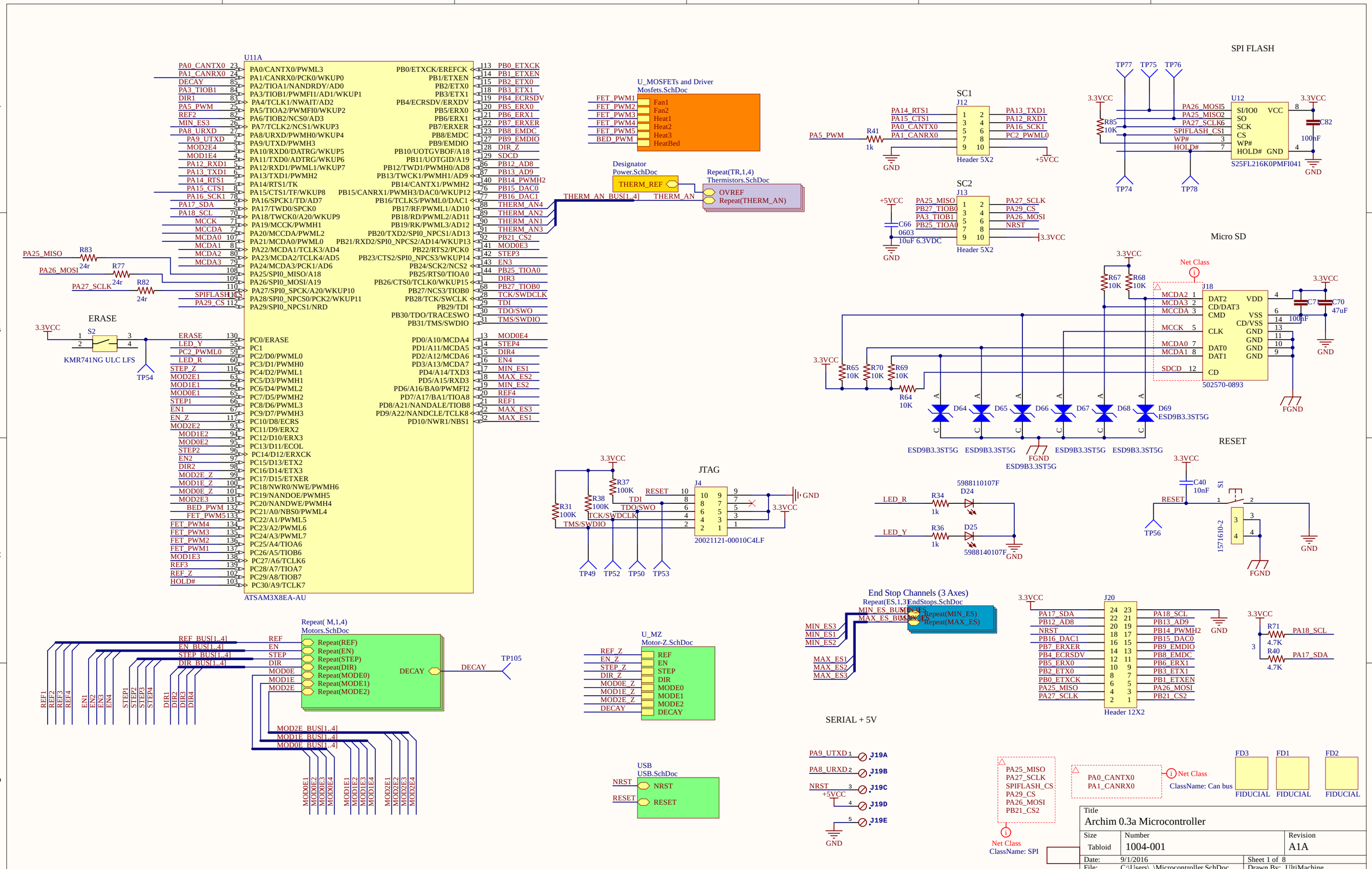
U11A
ATSAM3X8EA-AU
ERASE
KMR741NG ULC LFS
U_MOSFETs and Driver Mosfets.SchDoc
Fan1
Fan2
Heat1
Heat2
Heat3
HeatBed
Designator Power.SchDoc
THERM_REF
Repeat(TR,1,4) Thermistors.SchDoc
OVREF
Repeat(THERM_AN)
THERM_AN_BUS[1..4]
SC1
J12
Header 5X2
SC2
J13
Header 5X2
SPI FLASH
U12
S25FL216K0PMFI041
Micro SD
J18
502570-0893
RESET
5988110107F
JTAG
J4
20021121-00010C4LF
Repeat(M,1,4) Motors.SchDoc
U_MZ Motor-Z.SchDoc
End Stop Channels (3 Axes)
Repeat(ES,1,3) EndStops.SchDoc
J20
Header 12X2
SERIAL + 5V
USB USB.SchDoc
Net Class
ClassName: Can bus
ClassName: SPI
FIDUCIAL
Title
Archim 0.3a Microcontroller
Size
Tabloid
Number
1004-001
Revision
A1A
Date: 9/1/2016
Sheet 1 of 8
File: C:\Users\..\Microcontroller.SchDoc
Drawn By: UltiMachine

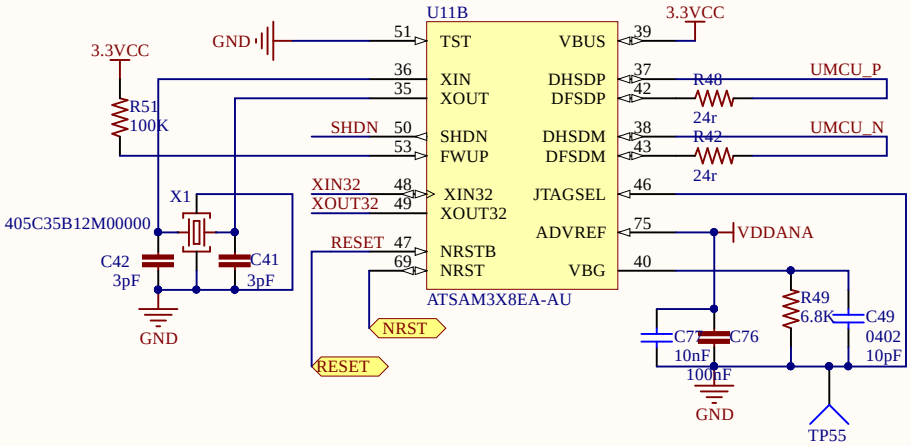

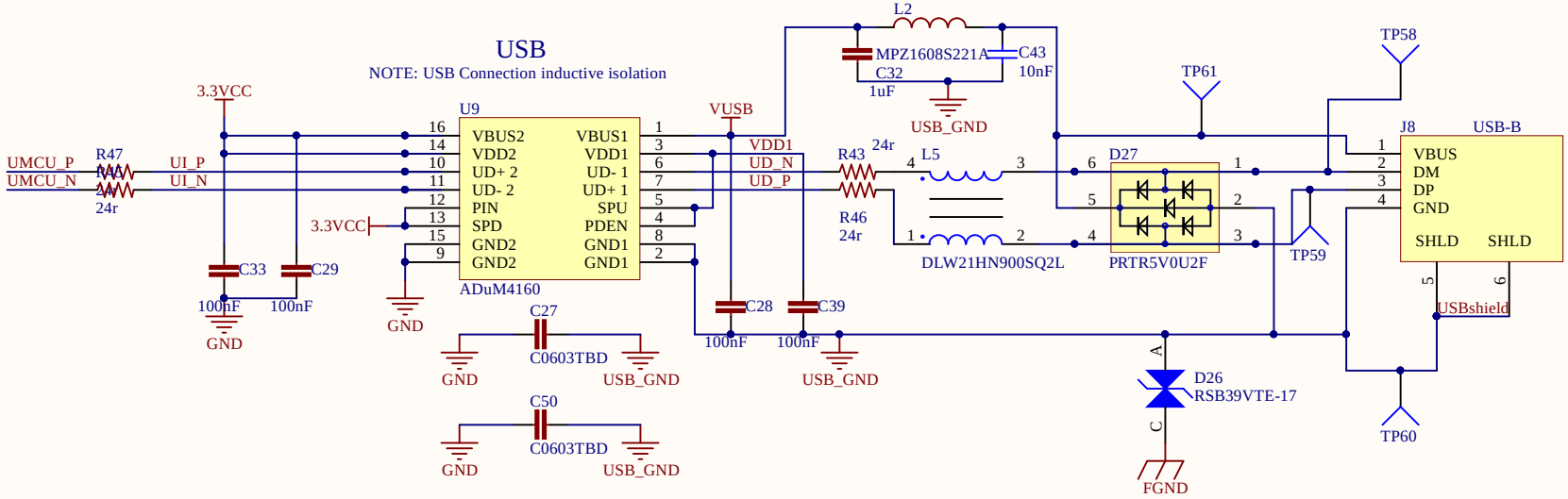

Title		
Archim 0.3a USB		
Size: Letter	Number: 1004-001	Revision: A1A
Date: 9/1/2016		Sheet 2 of 8
File: C:\Users\..\USB.SchDoc		Drawn By: UltiMachine

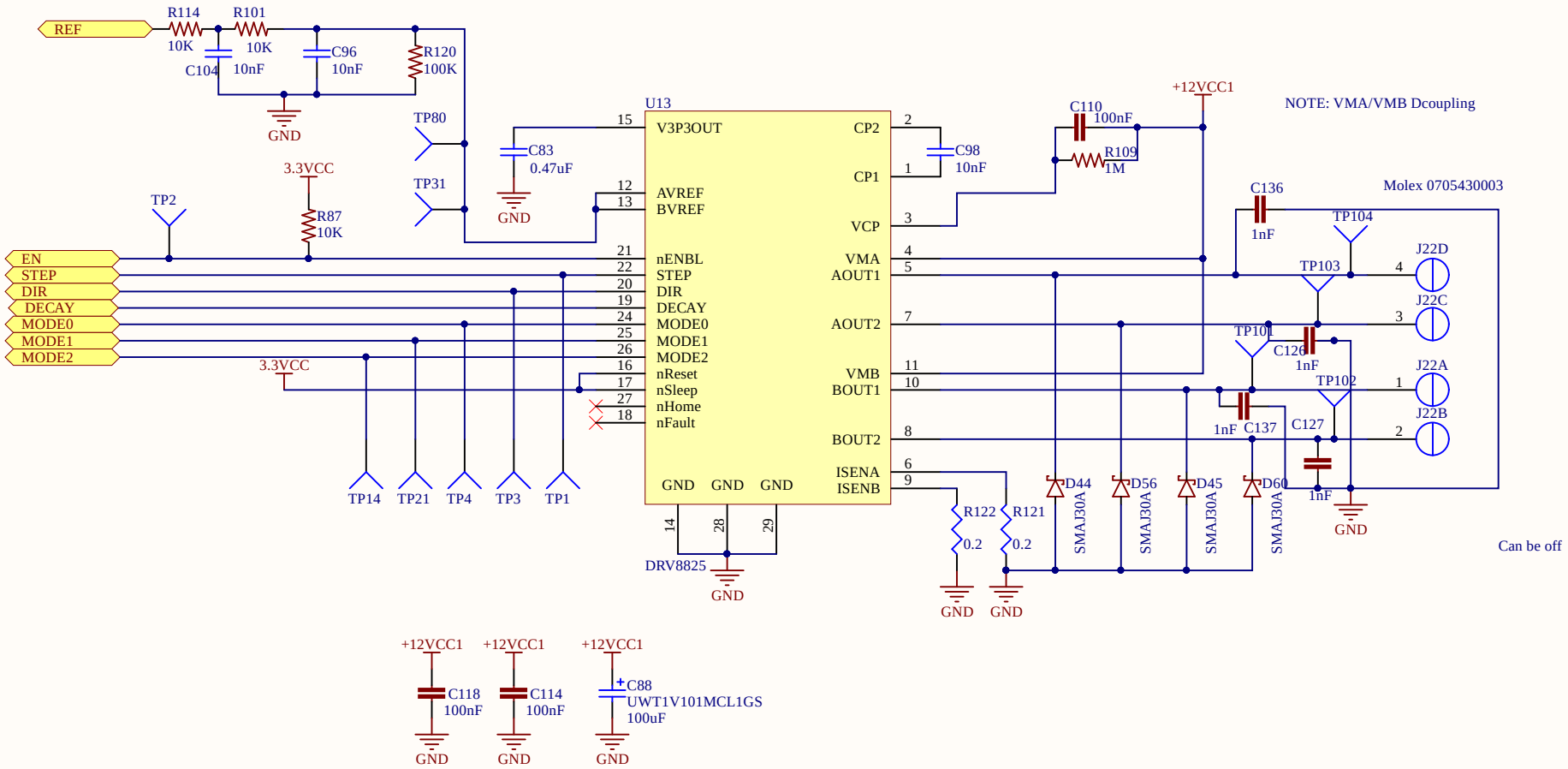

Title	Archim 0.3a Motors	
Size: Letter	Number: 1004-001	Revision: A1A
Date: 9/1/2016		Sheet 3 of 8
File: C:\Users\..\Motors.SchDoc		Drawn By: UltiMachine

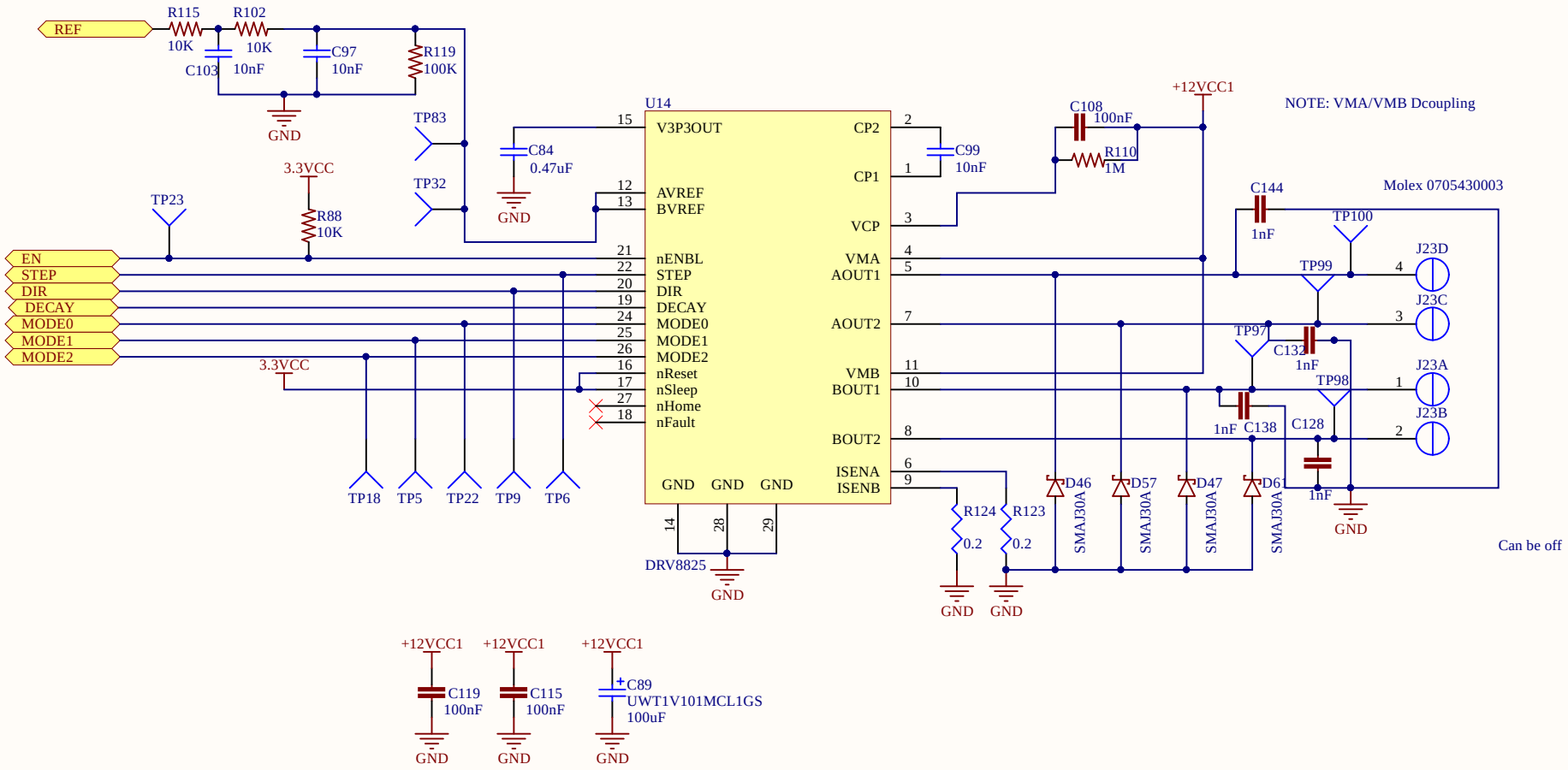

Title	Archim 0.3a Motors	
Size: Letter	Number: 1004-001	Revision: A1A
Date: 9/1/2016		Sheet 3 of 8
File: C:\Users\..\Motors.SchDoc		Drawn By: UltiMachine

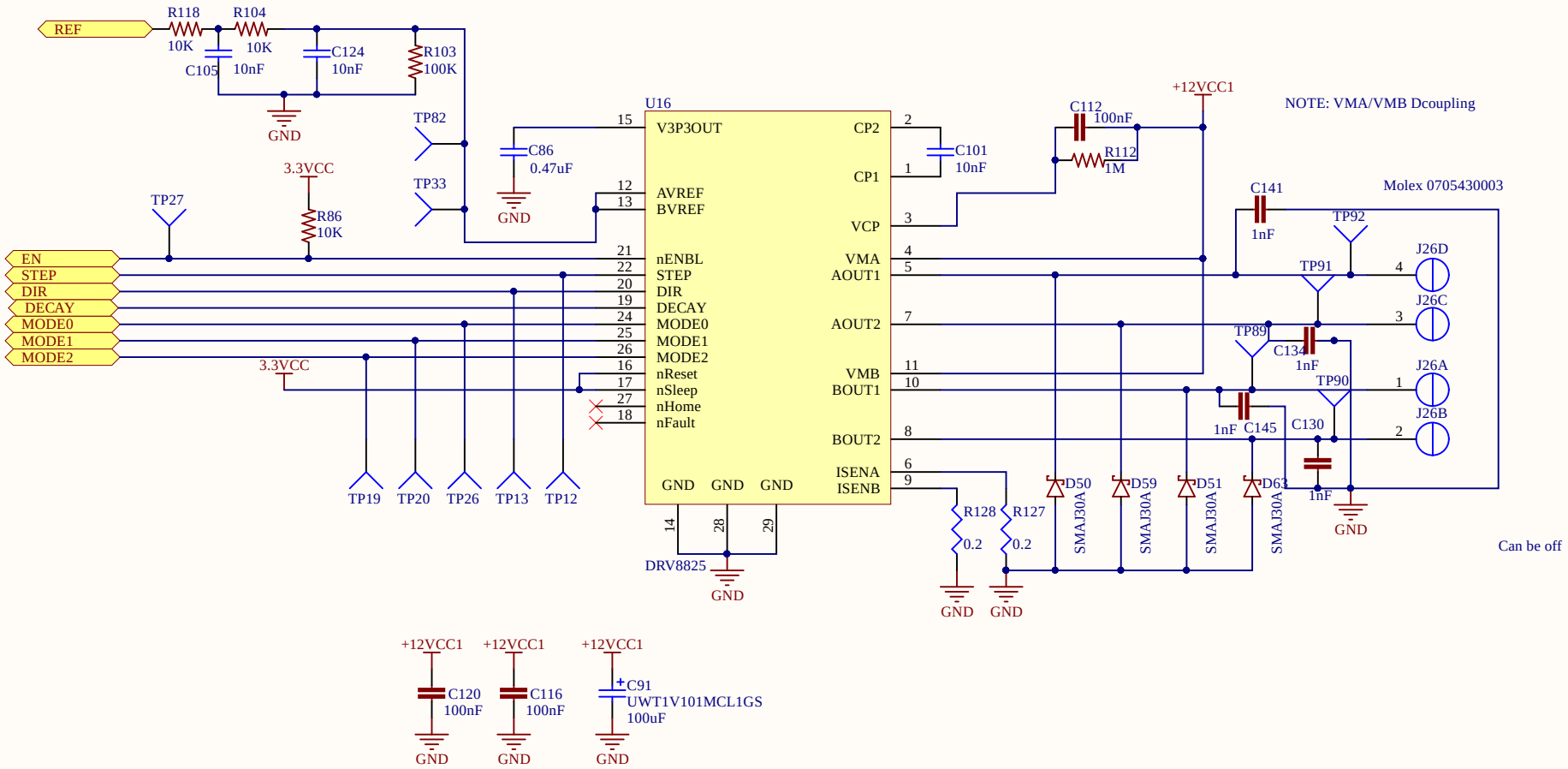

Title		
Archim 0.3a Motors		
Size: Letter	Number: 1004-001	Revision: A1A
Date: 9/1/2016		Sheet 3 of 8
File: C:\Users\..\Motors.SchDoc		Drawn By: UltiMachine

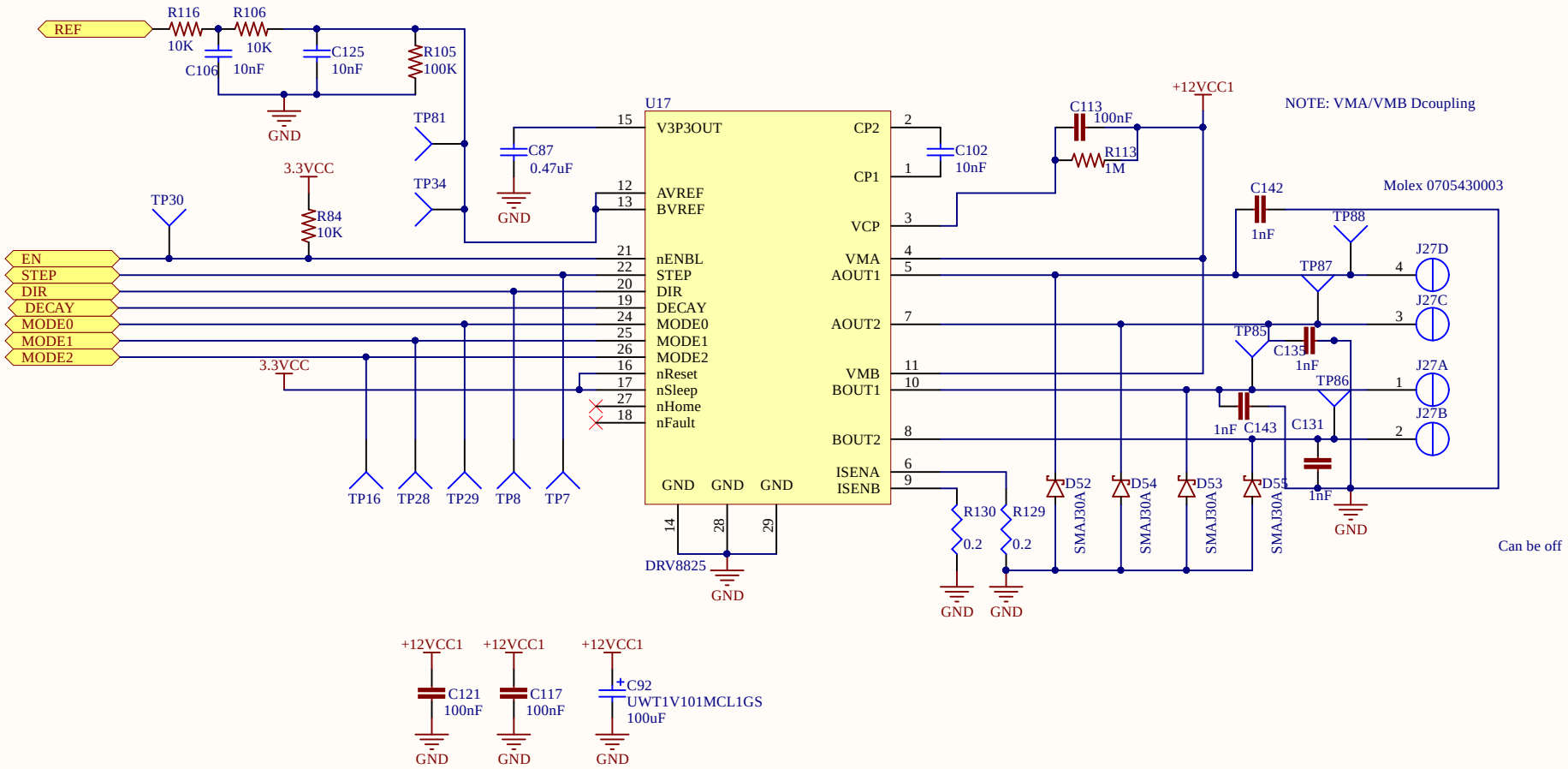

Title	Archim 0.3a Motors	
Size: Letter	Number: 1004-001	Revision: A1A
Date: 9/1/2016		Sheet 3 of 8
File: C:\Users\..\Motors.SchDoc		Drawn By: UltiMachine

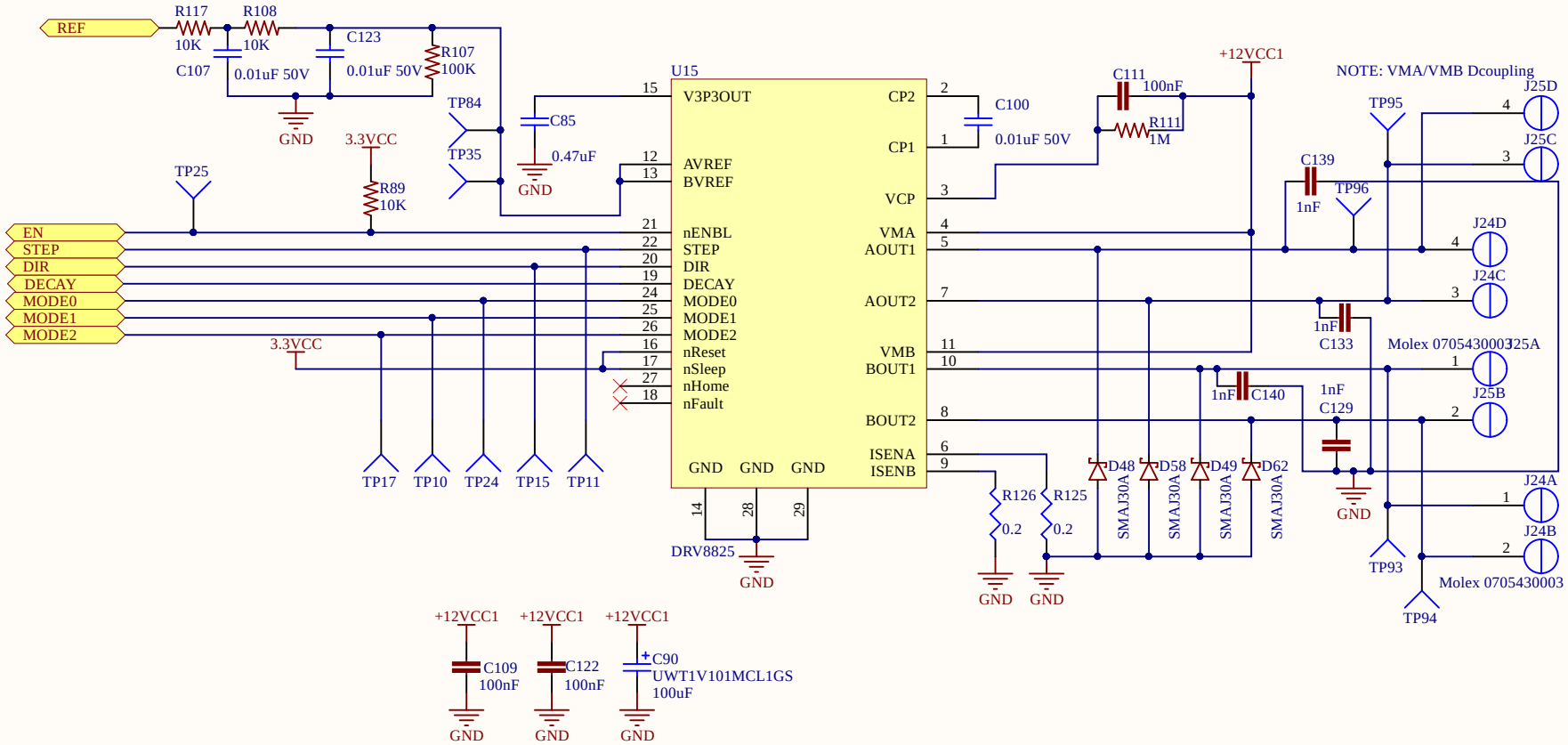

Title	Archim 0.3a Motor-Z	
Size: Letter	Number: 1004-001	Revision: A1A
Date: 9/1/2016		Sheet 4 of 8
File: C:\Users\..\Motor-Z.SchDoc		Drawn By: UltiMachine

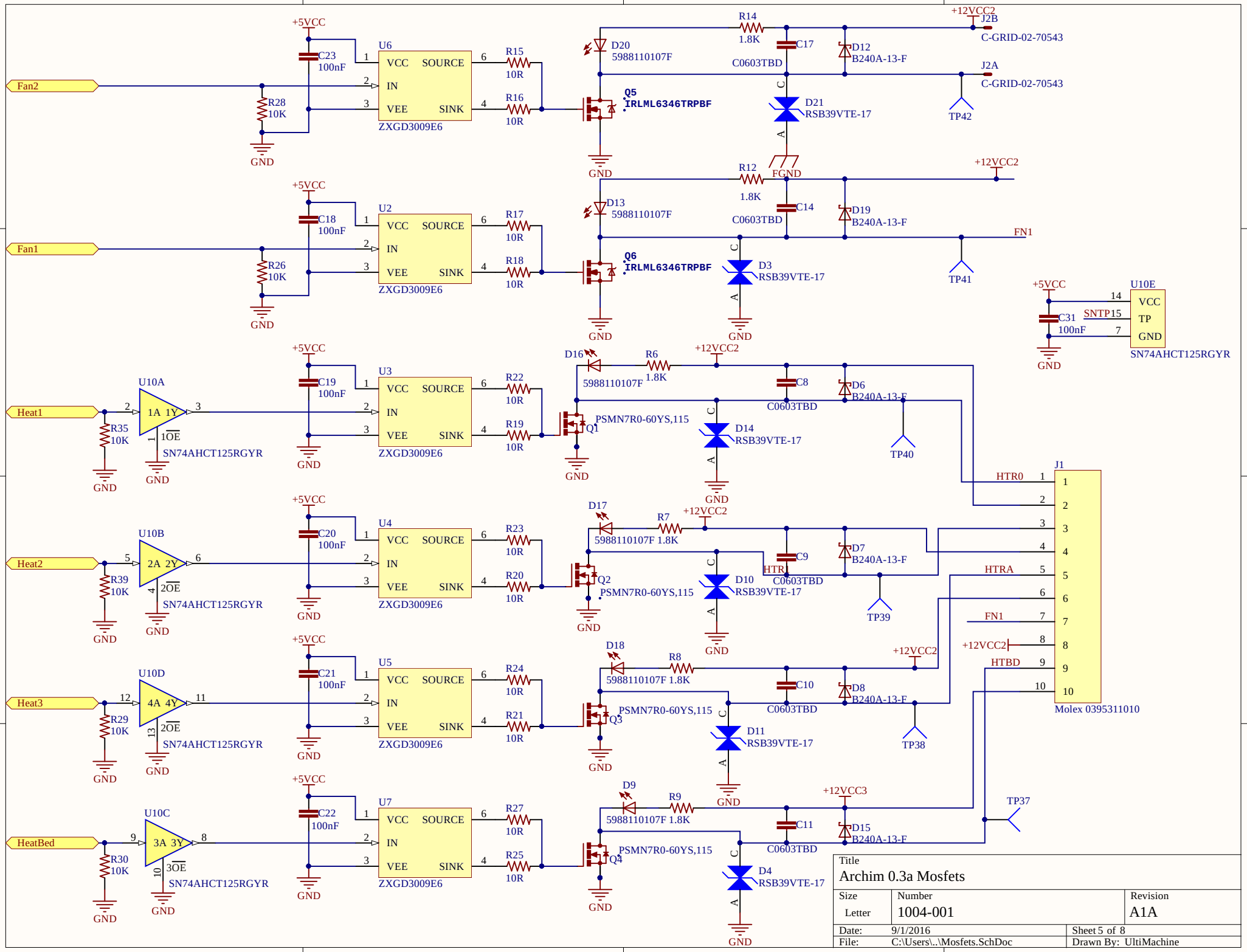

Title		
Archim 0.3a Mosfets		
Size: Letter	Number: 1004-001	Revision: A1A
Date: 9/1/2016		Sheet 5 of 8
File: C:\Users\..\Mosfets.SchDoc		Drawn By: UltiMachine

Thermistor Channel

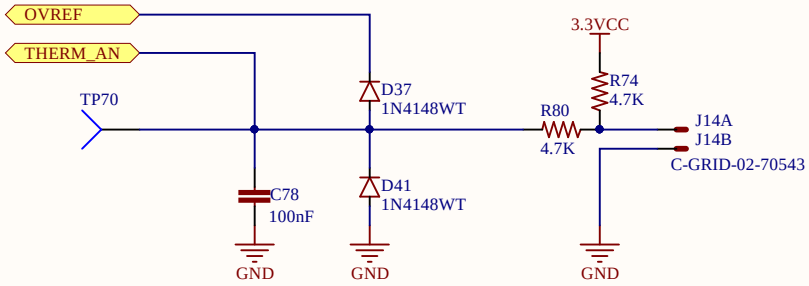

Title	Archim 0.3a Thermistors	
Size: Letter	Number: 1004-001	Revision: A1A
Date: 9/1/2016		Sheet 6 of 8
File: C:\Users\..\Thermistors.SchDoc		Drawn By: UltiMachine

Thermistor Channel

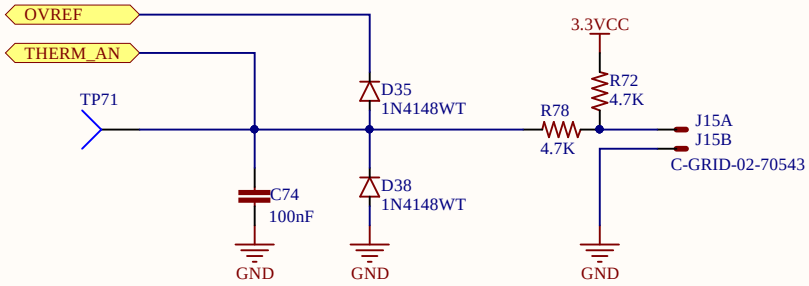

Title	Archim 0.3a Thermistors	
Size: Letter	Number: 1004-001	Revision: A1A
Date: 9/1/2016		Sheet 6 of 8
File: C:\Users\..\Thermistors.SchDoc		Drawn By: UltiMachine

Thermistor Channel

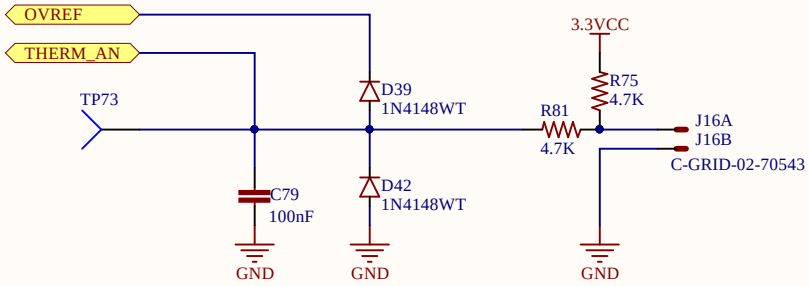

Title	Archim 0.3a Thermistors	
Size: Letter	Number: 1004-001	Revision: A1A
Date: 9/1/2016		Sheet 6 of 8
File: C:\Users\..\Thermistors.SchDoc		Drawn By: UltiMachine

Thermistor Channel

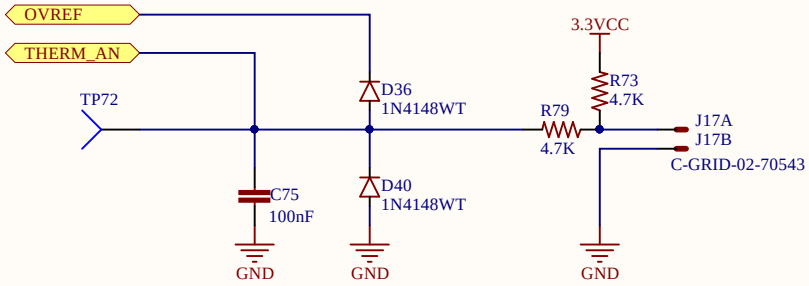

Title	Archim 0.3a Thermistors	
Size: Letter	Number: 1004-001	Revision: A1A
Date: 9/1/2016		Sheet 6 of 8
File: C:\Users\..\Thermistors.SchDoc		Drawn By: UltiMachine

End Stop Channel

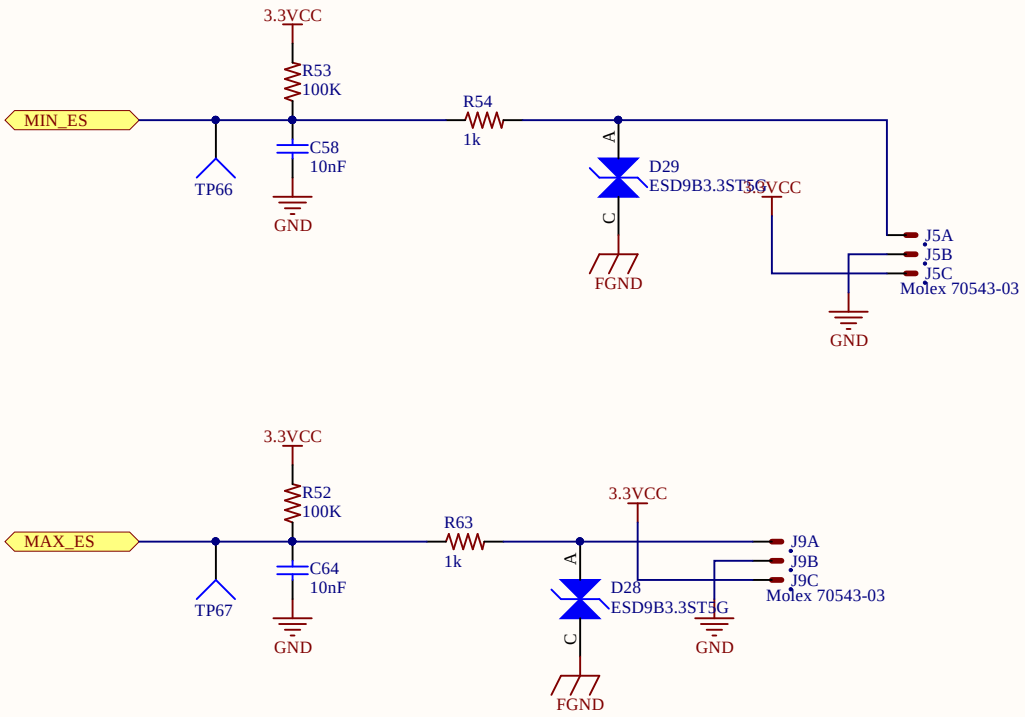

Title	Archim 0.3a Endstops	
Size: Letter	Number: 1004-001	Revision: A1A
Date: 9/1/2016		Sheet 7 of 8
File: C:\Users\..\EndStops.SchDoc		Drawn By: UltiMachine

End Stop Channel

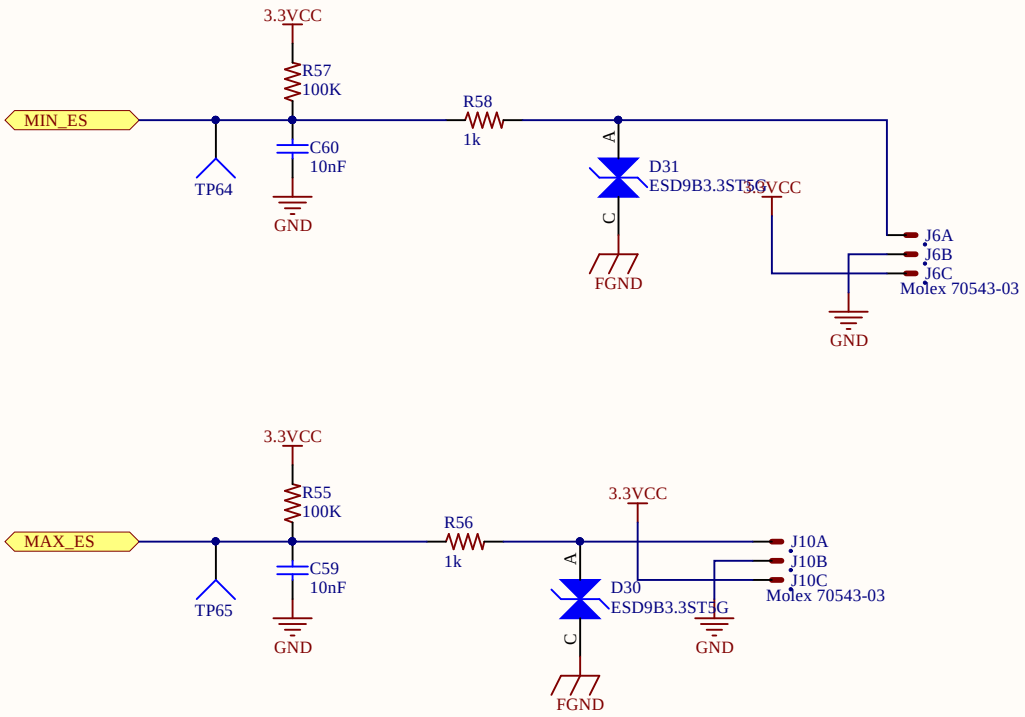

Title	Archim 0.3a Endstops	
Size: Letter	Number: 1004-001	Revision: A1A
Date: 9/1/2016		Sheet 7 of 8
File: C:\Users\..\EndStops.SchDoc		Drawn By: UltiMachine

End Stop Channel

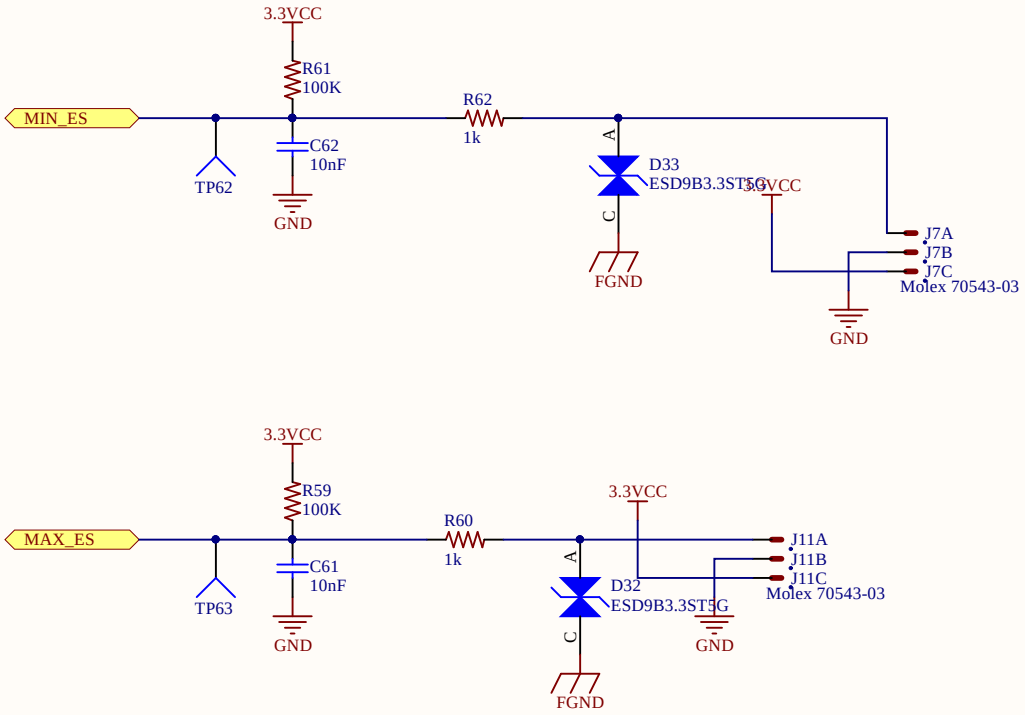

Title	Archim 0.3a Endstops	
Size: Letter	Number: 1004-001	Revision: A1A
Date: 9/1/2016		Sheet 7 of 8
File: C:\Users\..\EndStops.SchDoc		Drawn By: UltiMachine

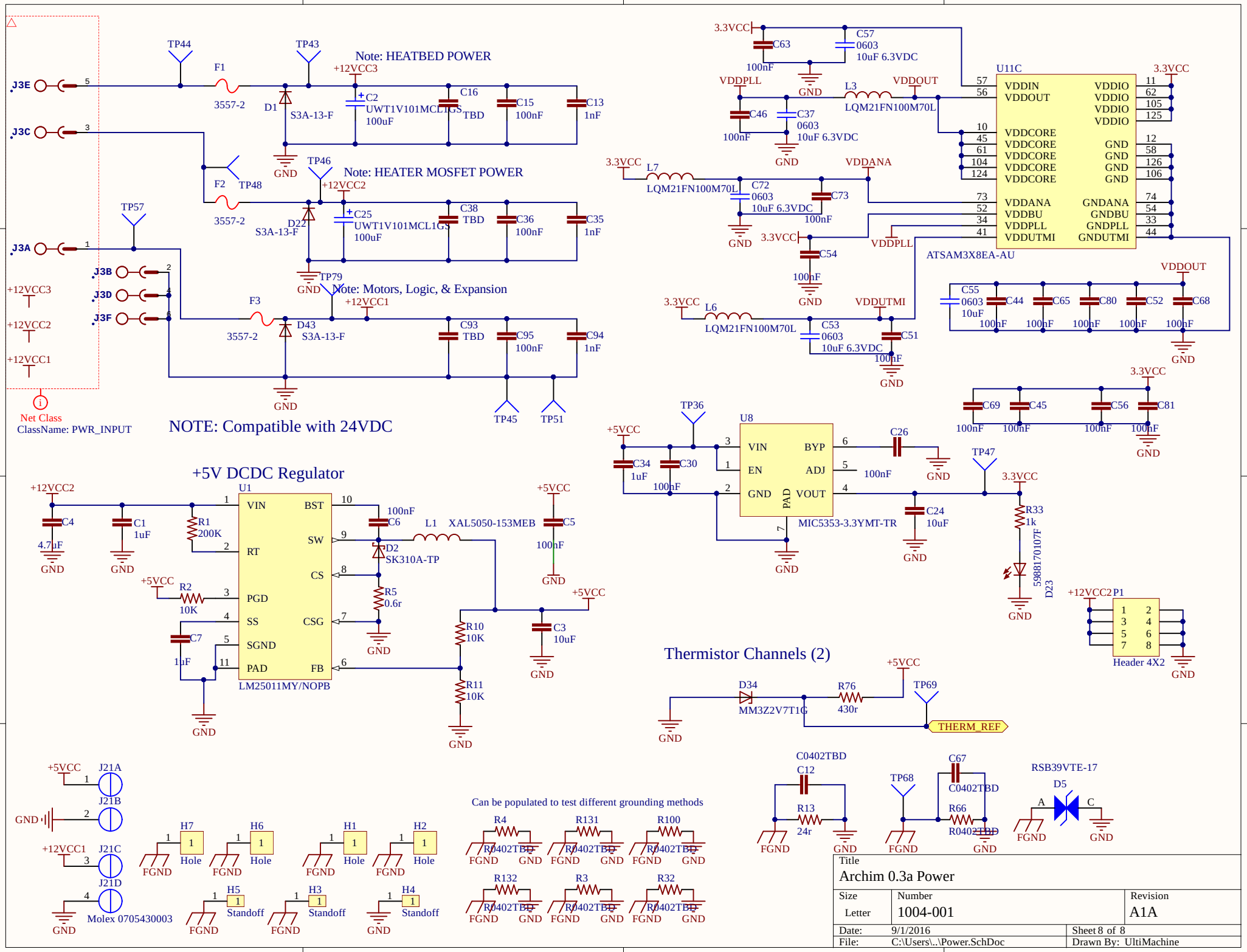
Note: HEATBED POWER
Note: HEATER MOSFET POWER
Note: Motors, Logic, & Expansion
NOTE: Compatible with 24VDC
Net Class
ClassName: PWR_INPUT
+5V DCDC Regulator
LM25011MY/NOPB
XAL5050-153MEB
SK310A-TP
Thermistor Channels (2)
MM3Z2V7T1G
THERM_REF
ATSAM3X8EA-AU
MIC5353-3.3YMT-TR
LQM21FN100M70L
Header 4X2
Molex 0705430003
Can be populated to test different grounding methods
Title
Archim 0.3a Power
Size
Letter
Number
1004-001
Revision
A1A
Date: 9/1/2016
Sheet 8 of 8
File: C:\Users\..\Power.SchDoc
Drawn By: UltiMachine

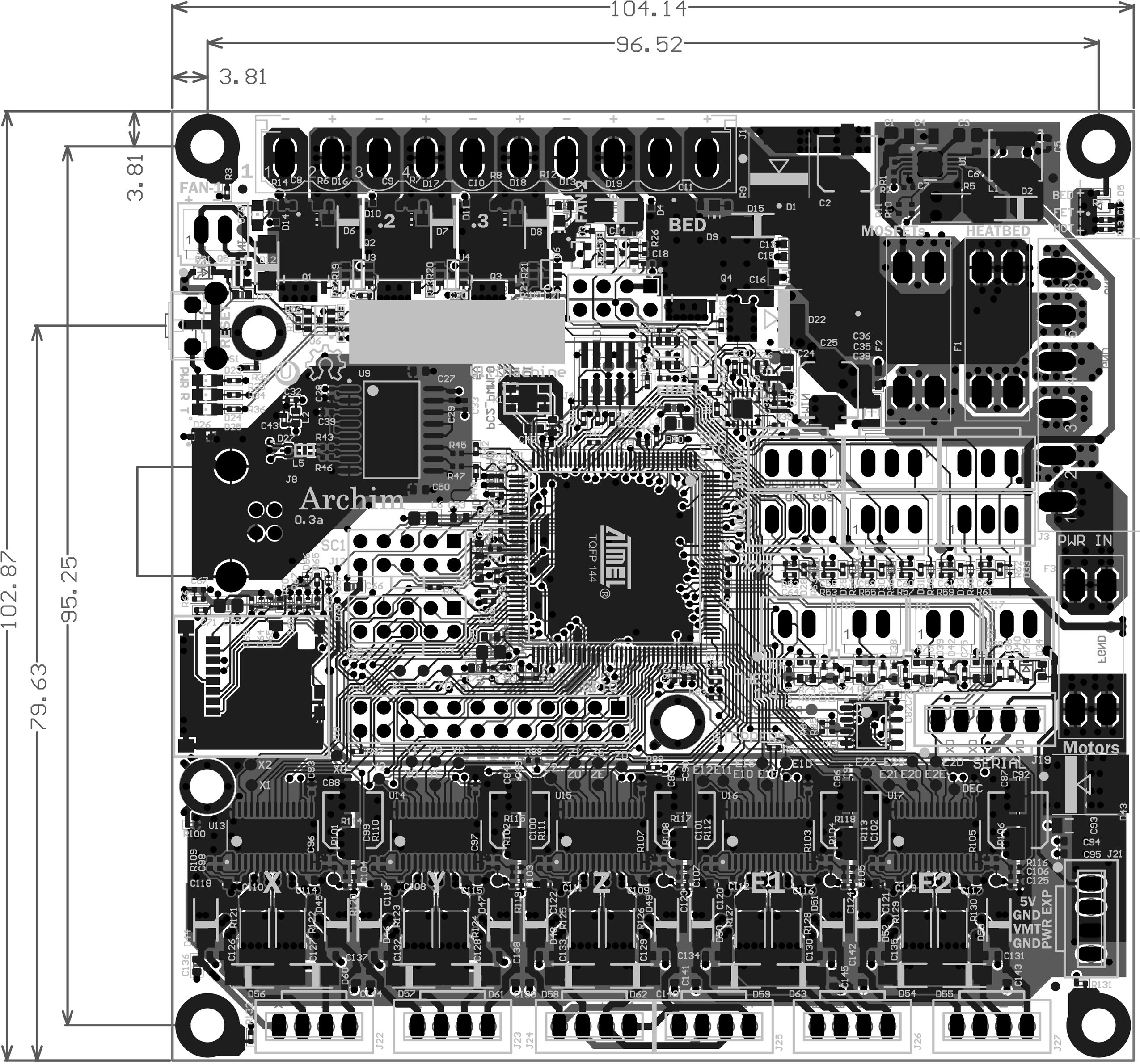
104.14
96.52
3.81
3.81
102.87
95.25
79.63
FAN-1
BED
MOSFETs
HEATBED
PWR IN
Motors
Archim
0.3a
TQFP 144
SERIAL
X
Y
Z
E1
E2
5V
GND
VMT
GND
PWR EXP

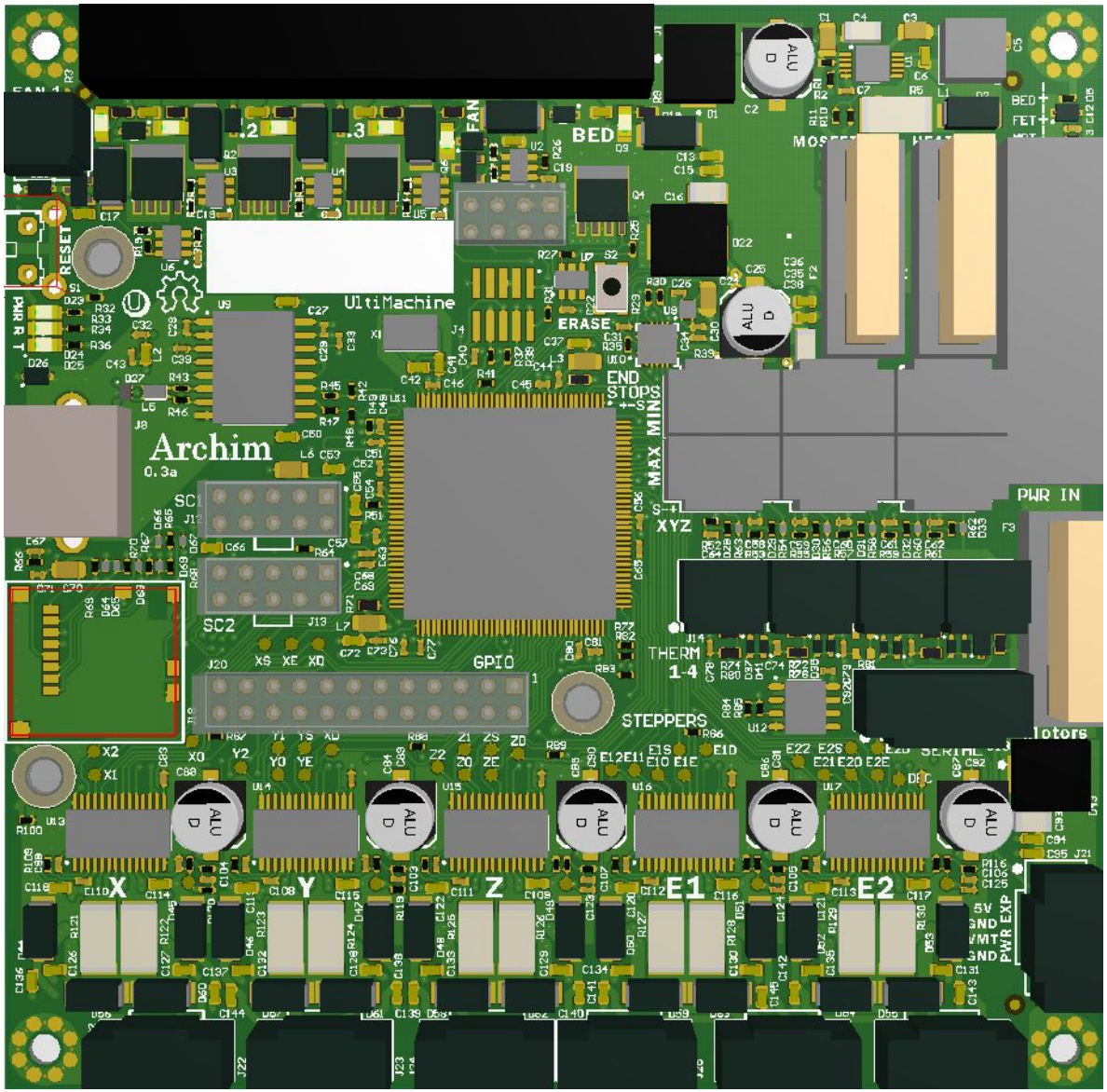
Archim
0.3a
UltiMachine
RESET
PWR
FAN
BED
ERASE
END STOPS
MAX MINS
XYZ
PWR IN
SC1
SC2
GPIO
THERM 1-4
STEPPERS
X
Y
Z
E1
E2
5V
GND
/M1
GND
PWR EXP