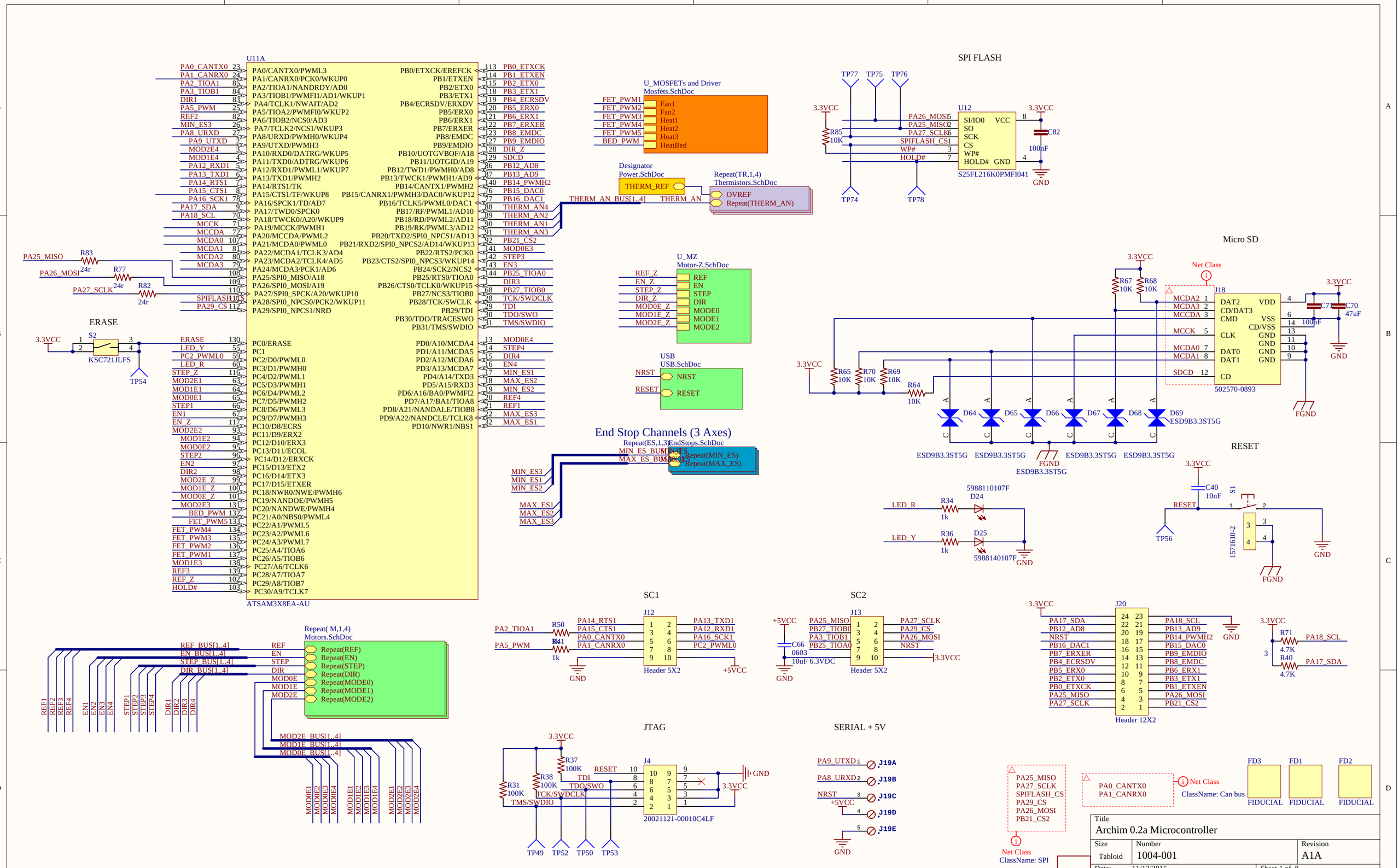
U11A
ATSAM3X8EA-AU
PA0_CANTX0 23 PA0/CANTX0/PWML3
PA1_CANRX0 24 PA1/CANRX0/PCK0/WKUP0
PA2_TIOA1 85 PA2/TIOA1/NANDRDY/AD0
PA3_TIOB1 84 PA3/TIOB1/PWMFI1/AD1/WKUP1
DIR1 83 PA4/TCLK1/NWAIT/AD2
PA5_PWM 25 PA5/TIOA2/PWMFI0/WKUP2
REF2 82 PA6/TIOB2/NCS0/AD3
MIN_ES3 26 PA7/TCLK2/NCS1/WKUP3
PA8_URXD 27 PA8/URXD/PWMH0/WKUP4
PA9_UTXD 2 PA9/UTXD/PWMH3
MOD2E4 3 PA10/RXD0/DATRG/WKUP5
MOD1E4 4 PA11/TXD0/ADTRG/WKUP6
PA12_RXD1 5 PA12/RXD1/PWML1/WKUP7
PA13_TXD1 6 PA13/TXD1/PWMH2
PA14_RTS1 7 PA14/RTS1/TK
PA15_CTS1 8 PA15/CTS1/TF/WKUP8
PA16_SCK1 78 PA16/SPCK1/TD/AD7
PA17_SDA 9 PA17/TWD0/SPCK0
PA18_SCL 70 PA18/TWCK0/A20/WKUP9
MCCK 71 PA19/MCCK/PWMH1
MCCDA 72 PA20/MCCDA/PWML2
MCDA0 107 PA21/MCDA0/PWML0
MCDA1 81 PA22/MCDA1/TCLK3/AD4
MCDA2 80 PA23/MCDA2/TCLK4/AD5
MCDA3 79 PA24/MCDA3/PCK1/AD6
108 PA25/SPI0_MISO/A18
109 PA26/SPI0_MOSI/A19
110 PA27/SPI0_SPCK/A20/WKUP10
SPIFLASH_CS 10 PA28/SPI0_NPCS0/PCK2/WKUP11
PA29_CS 11 PA29/SPI0_NPCS1/NRD
ERASE 130 PC0/ERASE
LED_Y 55 PC1
PC2_PWML0 59 PC2/D0/PWML0
LED_R 60 PC3/D1/PWMH0
STEP_Z 116 PC4/D2/PWML1
MOD2E1 63 PC5/D3/PWMH1
MOD1E1 64 PC6/D4/PWML2
MOD0E1 65 PC7/D5/PWMH2
STEP1 66 PC8/D6/PWML3
EN1 67 PC9/D7/PWMH3
EN_Z 117 PC10/D8/ECRS
MOD2E2 93 PC11/D9/ERX2
MOD1E2 94 PC12/D10/ERX3
MOD0E2 95 PC13/D11/ECOL
STEP2 96 PC14/D12/ERXCK
EN2 97 PC15/D13/ETX2
DIR2 98 PC16/D14/ETX3
MOD2E_Z 99 PC17/D15/ETXER
MOD1E_Z 100 PC18/NWR0/NWE/PWMH6
MOD0E_Z 101 PC19/NANDOE/PWMH5
MOD2E3 131 PC20/NANDWE/PWMH4
BED_PWM 132 PC21/A0/NBS0/PWML4
FET_PWM5 133 PC22/A1/PWML5
FET_PWM4 134 PC23/A2/PWML6
FET_PWM3 135 PC24/A3/PWML7
FET_PWM2 136 PC25/A4/TIOA6
FET_PWM1 137 PC26/A5/TIOB6
MOD1E3 138 PC27/A6/TCLK6
REF3 139 PC28/A7/TIOA7
REF_Z 102 PC29/A8/TIOB7
HOLD# 103 PC30/A9/TCLK7
PB0/ETXCK/EREFCK 113 PB0_ETXCK
PB1/ETXEN 114 PB1_ETXEN
PB2/ETX0 115 PB2_ETX0
PB3/ETX1 118 PB3_ETX1
PB4/ECRSDV/ERXDV 119 PB4_ECRSDV
PB5/ERX0 120 PB5_ERX0
PB6/ERX1 121 PB6_ERX1
PB7/ERXER 122 PB7_ERXER
PB8/EMDC 123 PB8_EMDC
PB9/EMDIO 127 PB9_EMDIO
PB10/UOTGVBOF/A18 128 DIR_Z
PB11/UOTGID/A19 129 SDCD
PB12/TWD1/PWMH0/AD8 86 PB12_AD8
PB13/TWCK1/PWMH1/AD9 87 PB13_AD9
PB14/CANTX1/PWMH2 140 PB14_PWMH2
PB15/CANRX1/PWMH3/DAC0/WKUP12 76 PB15_DAC0
PB16/TCLK5/PWML0/DAC1 77 PB16_DAC1
PB17/RF/PWML1/AD10 88 THERM_AN4
PB18/RD/PWML2/AD11 89 THERM_AN2
PB19/RK/PWML3/AD12 90 THERM_AN1
PB20/TXD2/SPI0_NPCS1/AD13 91 THERM_AN3
PB21/RXD2/SPI0_NPCS2/AD14/WKUP13 92 PB21_CS2
PB22/RTS2/PCK0 41 MOD0E3
PB23/CTS2/SPI0_NPCS3/WKUP14 42 STEP3
PB24/SCK2/NCS2 43 EN3
PB25/RTS0/TIOA0 44 PB25_TIOA0
PB26/CTS0/TCLK0/WKUP15 1 DIR3
PB27/NCS3/TIOB0 68 PB27_TIOB0
PB28/TCK/SWCLK 28 TCK/SWDCLK
PB29/TDI 29 TDI
PB30/TDO/TRACESWO 30 TDO/SWO
PB31/TMS/SWDIO 31 TMS/SWDIO
PD0/A10/MCDA4 13 MOD0E4
PD1/A11/MCDA5 14 STEP4
PD2/A12/MCDA6 5 DIR4
PD3/A13/MCDA7 6 EN4
PD4/A14/TXD3 7 MIN_ES1
PD5/A15/RXD3 8 MAX_ES2
PD6/A16/BA0/PWMFI2 9 MIN_ES2
PD7/A17/BA1/TIOA8 20 REF4
PD8/A21/NANDALE/TIOB8 21 REF1
PD9/A22/NANDCLE/TCLK8 32 MAX_ES3
PD10/NWR1/NBS1 52 MAX_ES1
PA25_MISO R83 24r
PA26_MOSI R77 24r
PA27_SCLK R82 24r
ERASE
3.3VCC
S2
KSC721JLFS
TP54
U_MOSFETs and Driver
Mosfets.SchDoc
FET_PWM1 Fan1
FET_PWM2 Fan2
FET_PWM3 Heat1
FET_PWM4 Heat2
FET_PWM5 Heat3
BED_PWM HeatBed
Designator
Power.SchDoc
THERM_REF
THERM_AN_BUS[1..4]
THERM_AN
Repeat(TR,1,4)
Thermistors.SchDoc
OVREF
Repeat(THERM_AN)
U_MZ
Motor-Z.SchDoc
REF_Z REF
EN_Z EN
STEP_Z STEP
DIR_Z DIR
MOD0E_Z MODE0
MOD1E_Z MODE1
MOD2E_Z MODE2
USB
USB.SchDoc
NRST NRST
RESET RESET
End Stop Channels (3 Axes)
Repeat(ES,1,3)
EndStops.SchDoc
MIN_ES_BUS[1..3]
MAX_ES_BUS[1..3]
Repeat(MIN_ES)
Repeat(MAX_ES)
MIN_ES3
MIN_ES1
MIN_ES2
MAX_ES1
MAX_ES2
MAX_ES3
SPI FLASH
TP77 TP75 TP76
3.3VCC
R85 10K
U12
SI/IO0 VCC
SO
SCK
CS
WP#
HOLD# GND
PA26_MOSI 5
PA25_MISO 2
PA27_SCLK 6
SPIFLASH_CS 1
WP# 3
HOLD# 7
8
4
C82 100nF
S25FL216K0PMFI041
GND
TP74 TP78
Micro SD
3.3VCC
R67 10K
R68 10K
Net Class
J18
MCDA2 1
MCDA3 2
MCCDA 3
MCCK 5
MCDA0 7
MCDA1 8
SDCD 12
DAT2
CD/DAT3
CMD
CLK
DAT0
DAT1
CD
VDD
VSS
CD/VSS
GND
C71 100nF
C70 47uF
502570-0893
FGND
R65 10K
R70 10K
R69 10K
R64 10K
D64 D65 D66 D67 D68 D69
ESD9B3.3ST5G
RESET
LED_R R34 1k D24 5988110107F
LED_Y R36 1k D25 5988140107F
C40 10nF
S1
157T610-2
TP56
SC1
J12
PA2_TIOA1 R50
PA5_PWM R41 1k
PA14_RTS1
PA15_CTS1
PA0_CANTX0
PA1_CANRX0
PA13_TXD1
PA12_RXD1
PA16_SCK1
PC2_PWML0
Header 5X2
+5VCC
GND
SC2
J13
+5VCC
C66 0603 10uF 6.3VDC
PA25_MISO
PB27_TIOB0
PA3_TIOB1
PB25_TIOA0
PA27_SCLK
PA29_CS
PA26_MOSI
NRST
3.3VCC
Header 5X2
J20
PA17_SDA
PB12_AD8
NRST
PB16_DAC1
PB7_ERXER
PB4_ECRSDV
PB5_ERX0
PB2_ETX0
PB0_ETXCK
PA25_MISO
PA27_SCLK
PA18_SCL
PB13_AD9
PB14_PWMH2
PB15_DAC0
PB9_EMDIO
PB8_EMDC
PB6_ERX1
PB3_ETX1
PB1_ETXEN
PA26_MOSI
PB21_CS2
Header 12X2
R71 4.7K
R40 4.7K
Repeat(M,1,4)
Motors.SchDoc
REF_BUS[1..4]
EN_BUS[1..4]
STEP_BUS[1..4]
DIR_BUS[1..4]
REF
EN
STEP
DIR
MOD0E
MOD1E
MOD2E
Repeat(REF)
Repeat(EN)
Repeat(STEP)
Repeat(DIR)
Repeat(MODE0)
Repeat(MODE1)
Repeat(MODE2)
REF1 REF2 REF3 REF4
EN1 EN2 EN3 EN4
STEP1 STEP2 STEP3 STEP4
DIR1 DIR2 DIR3 DIR4
MOD2E_BUS[1..4]
MOD1E_BUS[1..4]
MOD0E_BUS[1..4]
MOD0E1 MOD0E2 MOD0E3 MOD0E4
MOD1E1 MOD1E2 MOD1E3 MOD1E4
MOD2E1 MOD2E2 MOD2E3 MOD2E4
JTAG
3.3VCC
R37 100K
R38 100K
R31 100K
RESET
TDI
TDO/SWO
TCK/SWDCLK
TMS/SWDIO
J4
20021121-00010C4LF
GND
TP49 TP52 TP50 TP53
SERIAL + 5V
PA9_UTXD J19A
PA8_URXD J19B
NRST J19C
+5VCC J19D
J19E
GND
PA25_MISO
PA27_SCLK
SPIFLASH_CS
PA29_CS
PA26_MOSI
PB21_CS2
Net Class
ClassName: SPI
PA0_CANTX0
PA1_CANRX0
Net Class
ClassName: Can bus
FD3 FD1 FD2
FIDUCIAL
Title
Archim 0.2a Microcontroller
Size Tabloid
Number 1004-001
Revision A1A
Date: 11/13/2015
Sheet 1 of 8
File: C:\Users\..\Microcontroller.SchDoc
Drawn By: UltiMachine

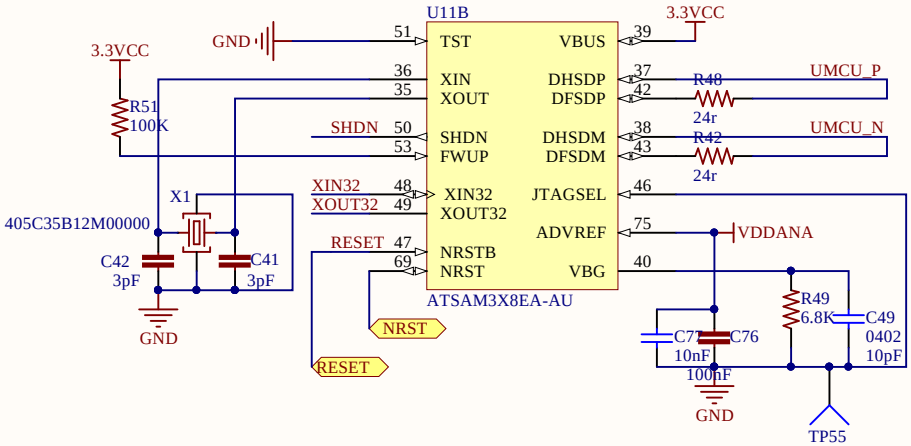

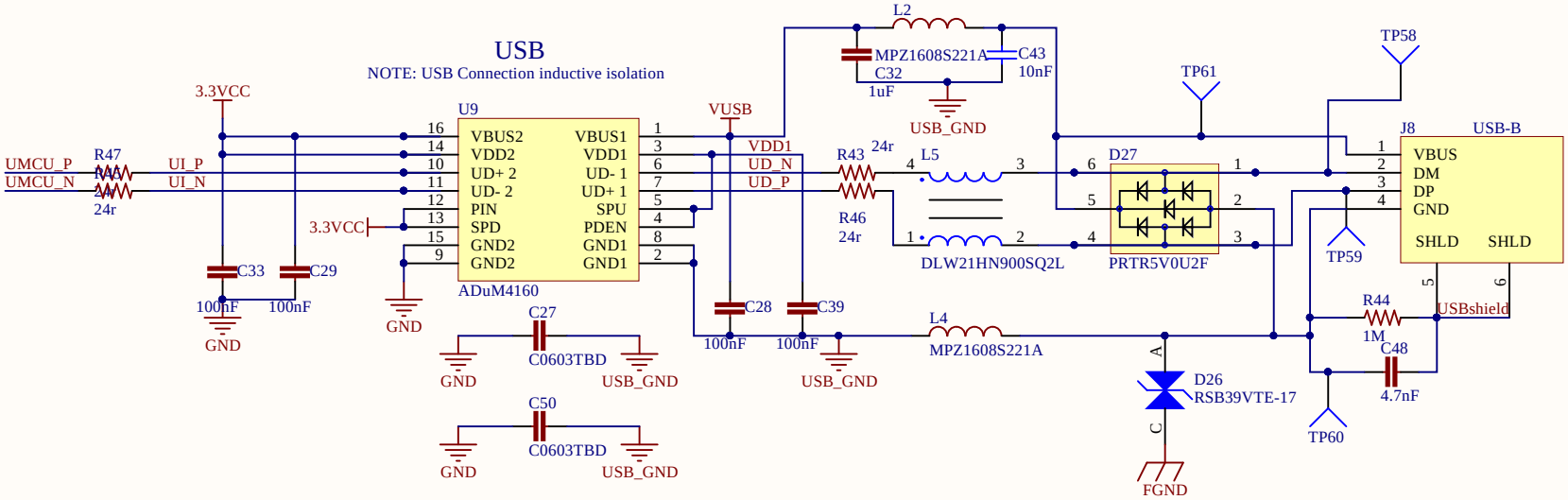

Title	Archim 0.2a USB	
Size: Letter	Number: 1004-001	Revision: A1A
Date: 11/13/2015		Sheet 2 of 8
File: C:\Users\..\USB.SchDoc		Drawn By: UltiMachine

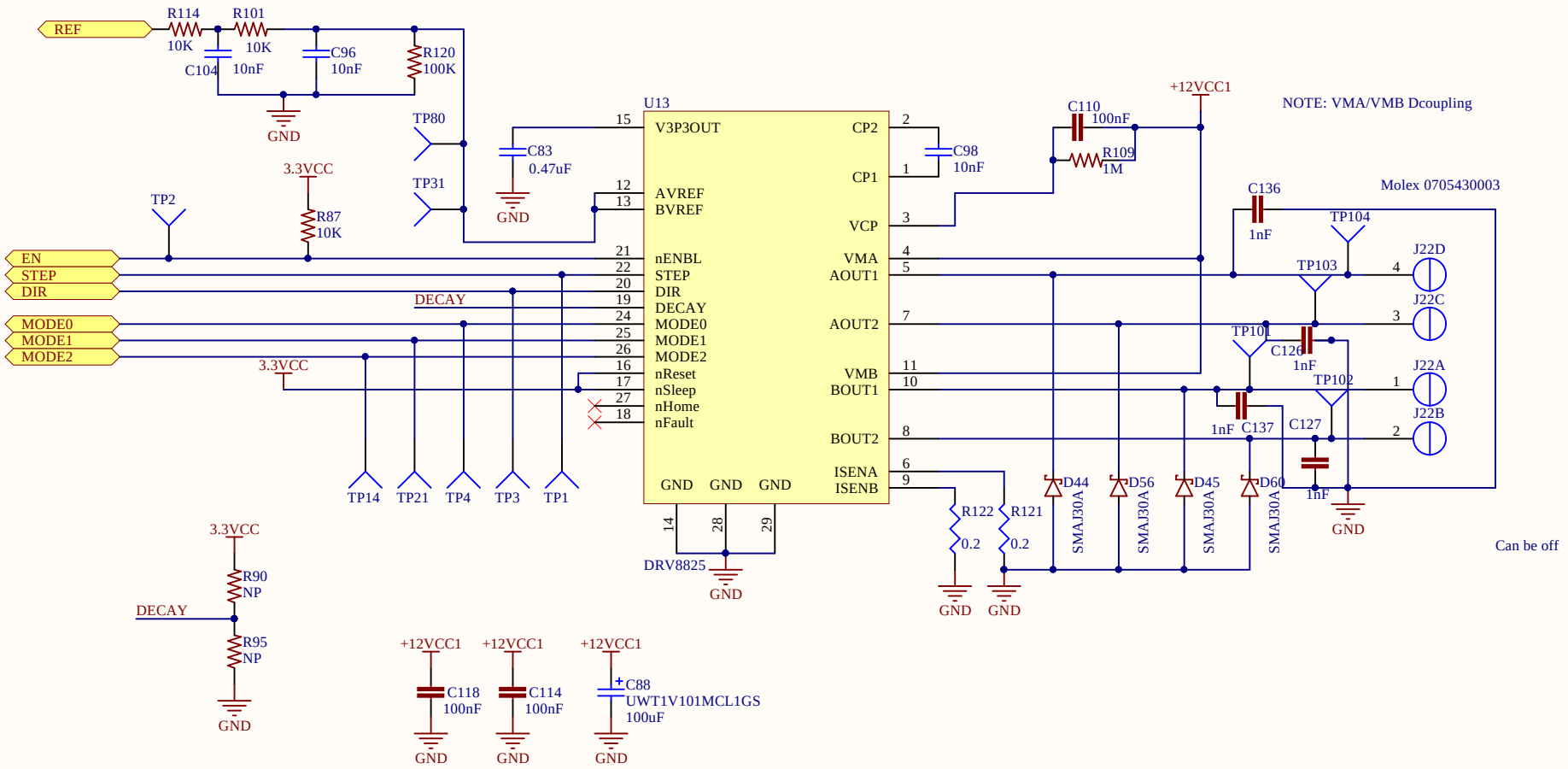

Title	Archim 0.2a Motors	
Size: Letter	Number: 1004-001	Revision: A1A
Date: 11/13/2015		Sheet 3 of 8
File: C:\Users\..\Motors.SchDoc		Drawn By: UltiMachine

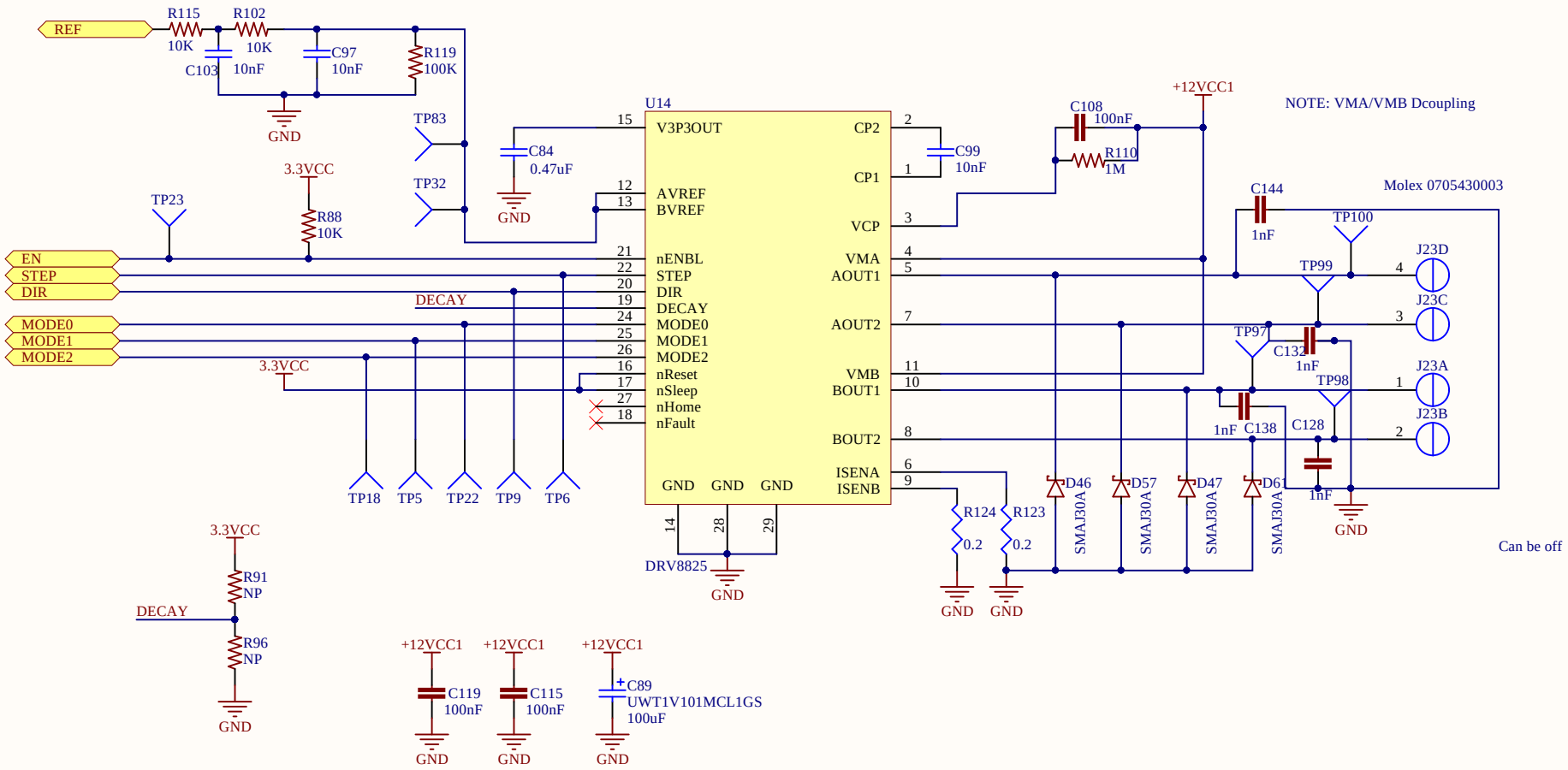

Title	Archim 0.2a Motors	
Size: Letter	Number: 1004-001	Revision: A1A
Date: 11/13/2015		Sheet 3 of 8
File: C:\Users\..\Motors.SchDoc		Drawn By: UltiMachine

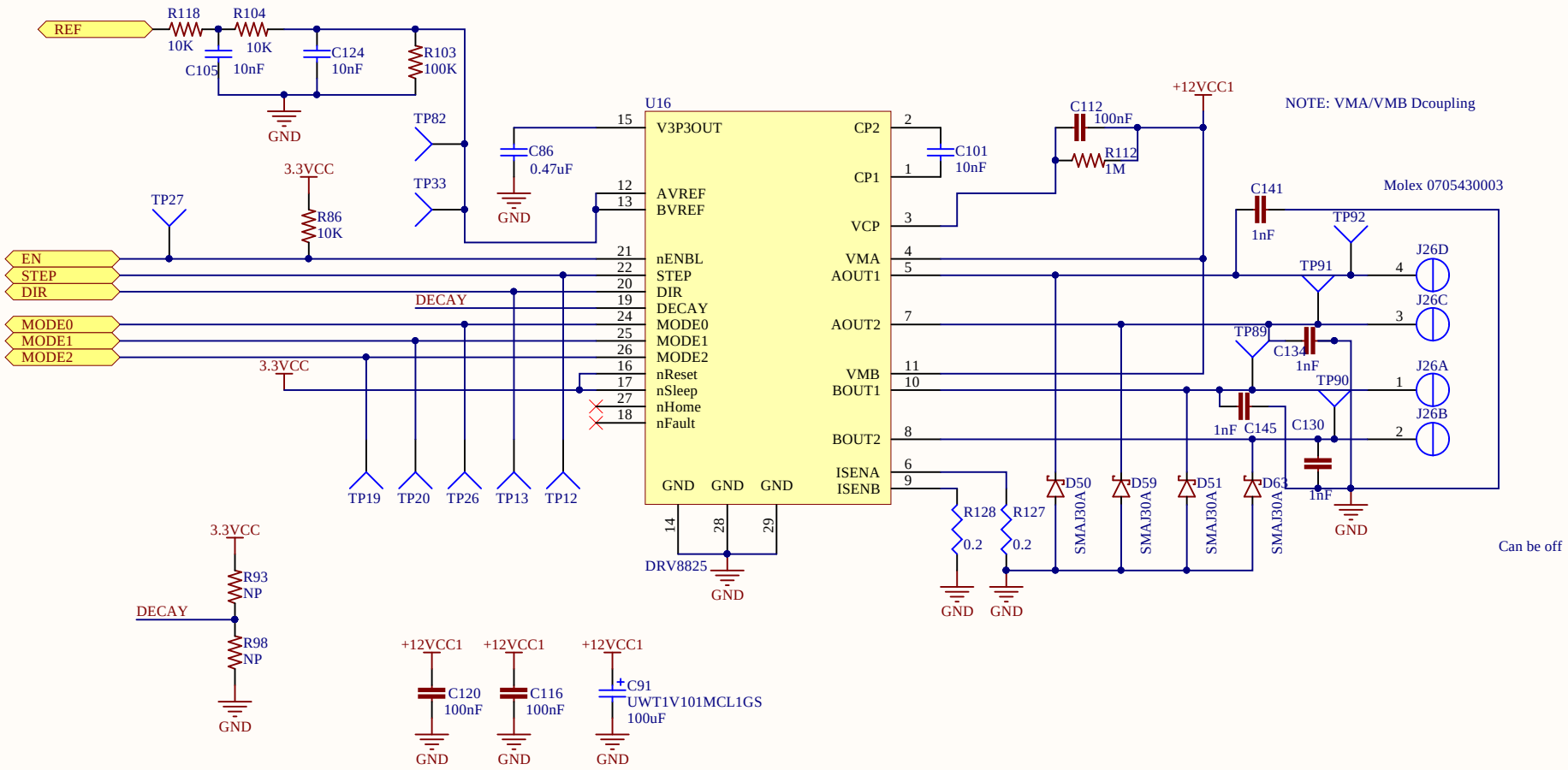

Title	Archim 0.2a Motors	
Size: Letter	Number: 1004-001	Revision: A1A
Date: 11/13/2015		Sheet 3 of 8
File: C:\Users\..\Motors.SchDoc		Drawn By: UltiMachine

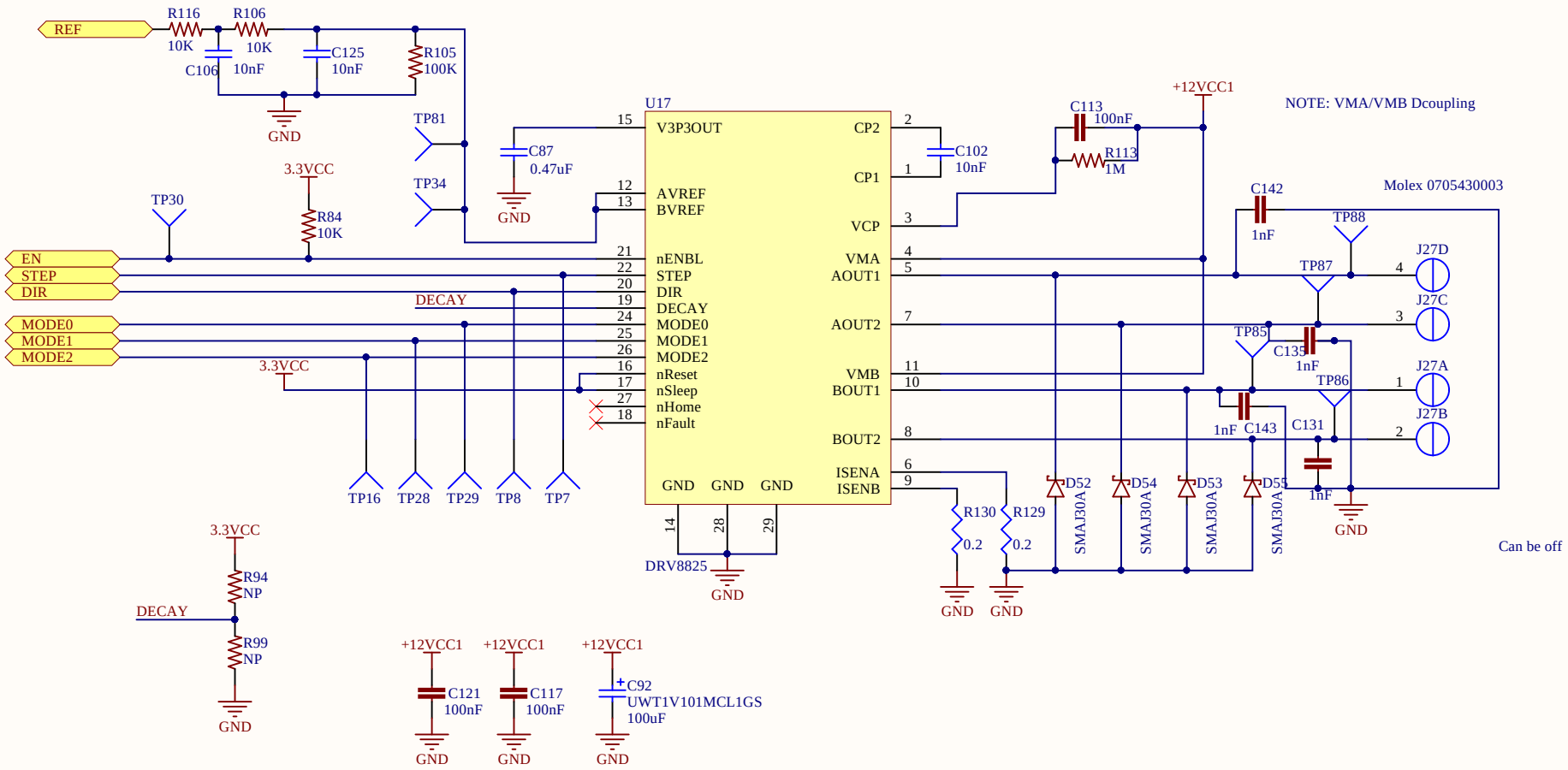

Title	Archim 0.2a Motors	
Size: Letter	Number: 1004-001	Revision: A1A
Date: 11/13/2015		Sheet 3 of 8
File: C:\Users\..\Motors.SchDoc		Drawn By: UltiMachine

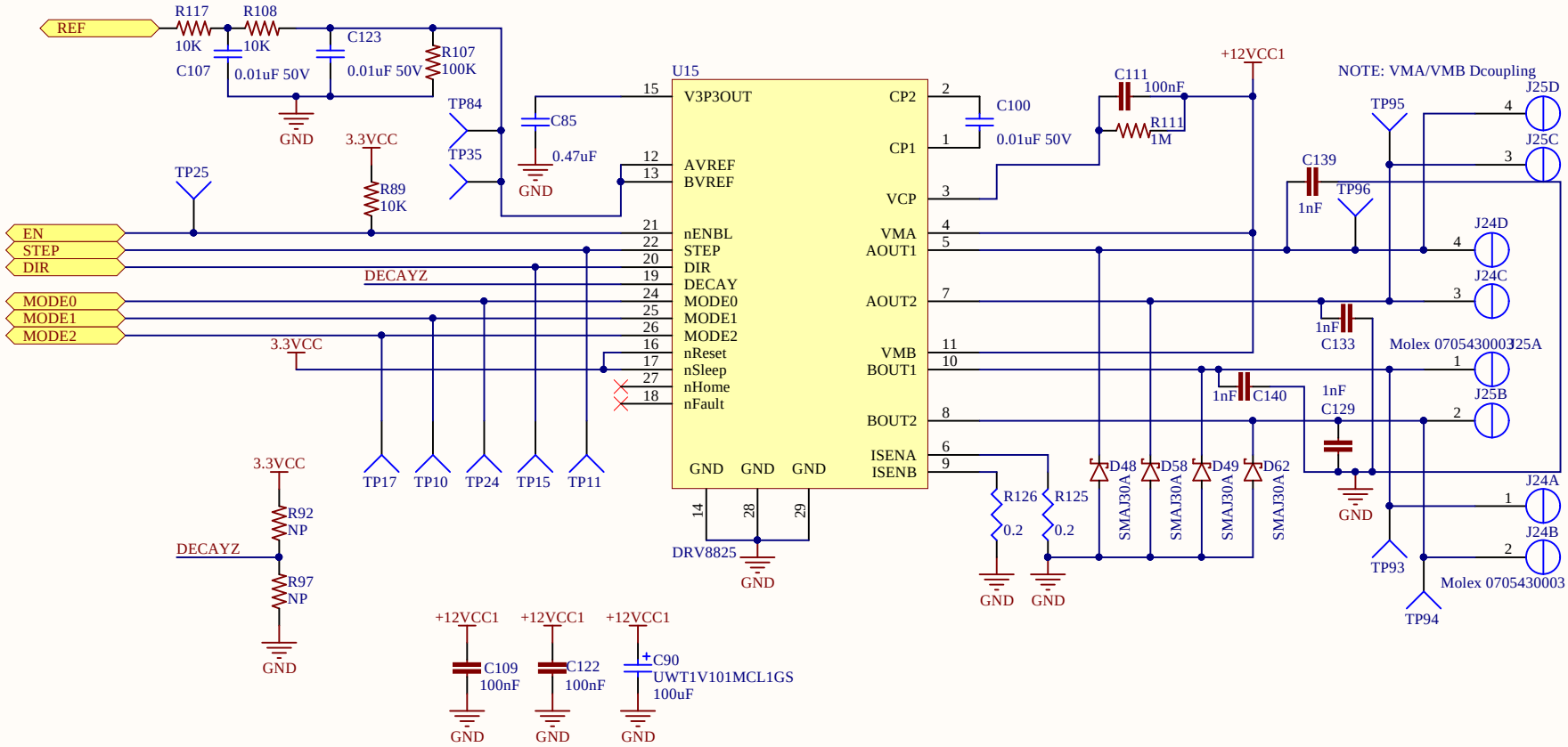

Title		
Archim 0.2a Motor-Z		
Size: Letter	Number: 1004-001	Revision: A1A
Date: 11/13/2015		Sheet 4 of 8
File: C:\Users\..\Motor-Z.SchDoc		Drawn By: UltiMachine

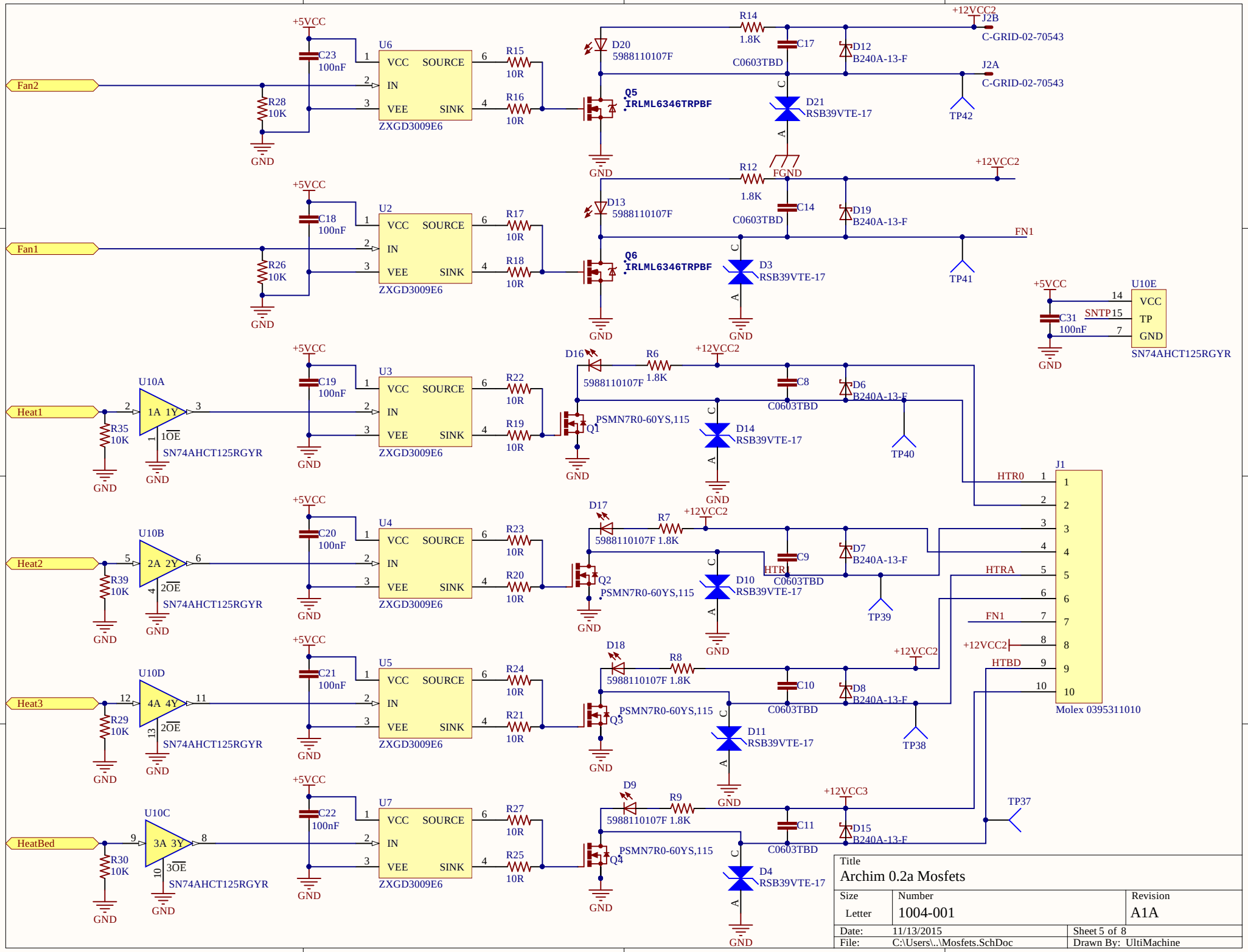
Fan2
Fan1
Heat1
Heat2
Heat3
HeatBed
U6
U2
U3
U4
U5
U7
VCC
SOURCE
IN
VEE
SINK
ZXGD3009E6
C23 100nF
C18 100nF
C19 100nF
C20 100nF
C21 100nF
C22 100nF
R28 10K
R26 10K
R35 10K
R39 10K
R29 10K
R30 10K
R15 10R
R16 10R
R17 10R
R18 10R
R22 10R
R19 10R
R23 10R
R20 10R
R24 10R
R21 10R
R27 10R
R25 10R
D20 5988110107F
D13 5988110107F
D16 5988110107F
D17 5988110107F
D18 5988110107F
D9 5988110107F
R14 1.8K
R12 1.8K
R6 1.8K
R7 1.8K
R8 1.8K
R9 1.8K
C17 C0603TBD
C14 C0603TBD
C8 C0603TBD
C9 C0603TBD
C10 C0603TBD
C11 C0603TBD
D12 B240A-13-F
D19 B240A-13-F
D6 B240A-13-F
D7 B240A-13-F
D8 B240A-13-F
D15 B240A-13-F
D21 RSB39VTE-17
D3 RSB39VTE-17
D14 RSB39VTE-17
D10 RSB39VTE-17
D11 RSB39VTE-17
D4 RSB39VTE-17
Q5 IRLML6346TRPBF
Q6 IRLML6346TRPBF
Q1 PSMN7R0-60YS,115
Q2 PSMN7R0-60YS,115
Q3 PSMN7R0-60YS,115
Q4 PSMN7R0-60YS,115
U10A
U10B
U10D
U10C
1A 1Y
2A 2Y
4A 4Y
3A 3Y
1OE
2OE
3OE
SN74AHCT125RGYR
U10E
VCC
TP
GND
SN74AHCT125RGYR
C31 100nF
SNTP
J1
Molex 0395311010
HTR0
HTRA
HTR1
HTBD
FN1
FGND
+5VCC
+12VCC2
+12VCC3
GND
J2B
J2A
C-GRID-02-70543
TP42
TP41
TP40
TP39
TP38
TP37
Title
Archim 0.2a Mosfets
Size
Letter
Number
1004-001
Revision
A1A
Date: 11/13/2015
Sheet 5 of 8
File: C:\Users\..\Mosfets.SchDoc
Drawn By: UltiMachine

Thermistor Channel

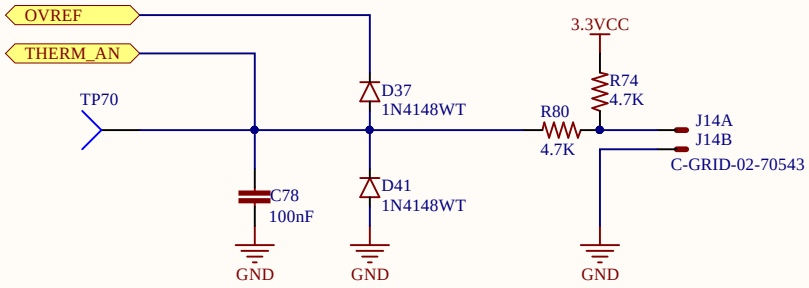

Title	Archim 0.2a Thermistors	
Size: Letter	Number: 1004-001	Revision: A1A
Date: 11/13/2015		Sheet 6 of 8
File: C:\Users\..\Thermistors.SchDoc		Drawn By: UltiMachine

Thermistor Channel

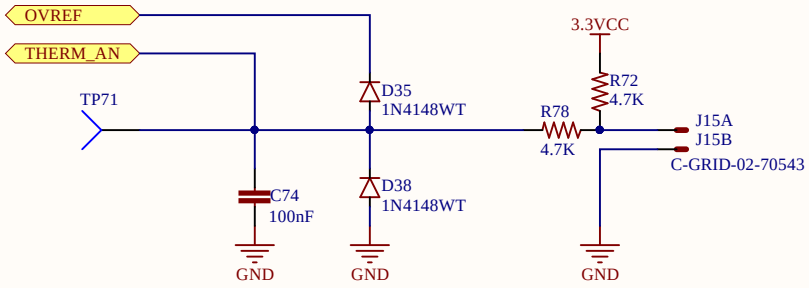

Title	Archim 0.2a Thermistors	
Size: Letter	Number: 1004-001	Revision: A1A
Date: 11/13/2015		Sheet 6 of 8
File: C:\Users\..\Thermistors.SchDoc		Drawn By: UltiMachine

Thermistor Channel

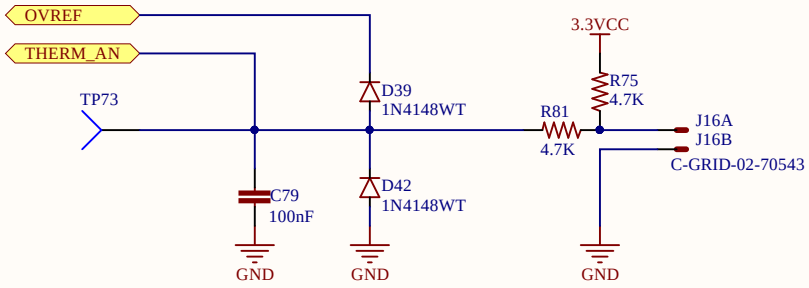

Title	Archim 0.2a Thermistors	
Size: Letter	Number: 1004-001	Revision: A1A
Date: 11/13/2015		Sheet 6 of 8
File: C:\Users\..\Thermistors.SchDoc		Drawn By: UltiMachine

Thermistor Channel

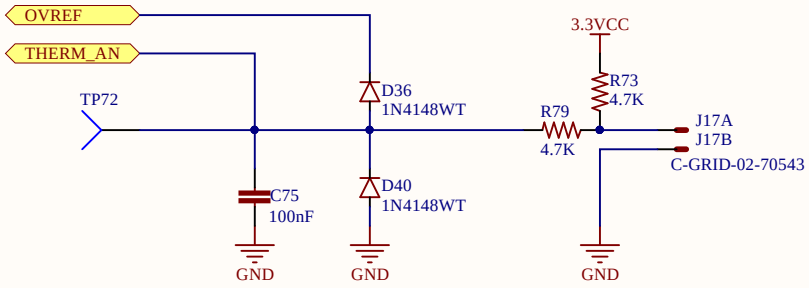

Title	Archim 0.2a Thermistors	
Size: Letter	Number: 1004-001	Revision: A1A
Date: 11/13/2015		Sheet 6 of 8
File: C:\Users\..\Thermistors.SchDoc		Drawn By: UltiMachine

End Stop Channel

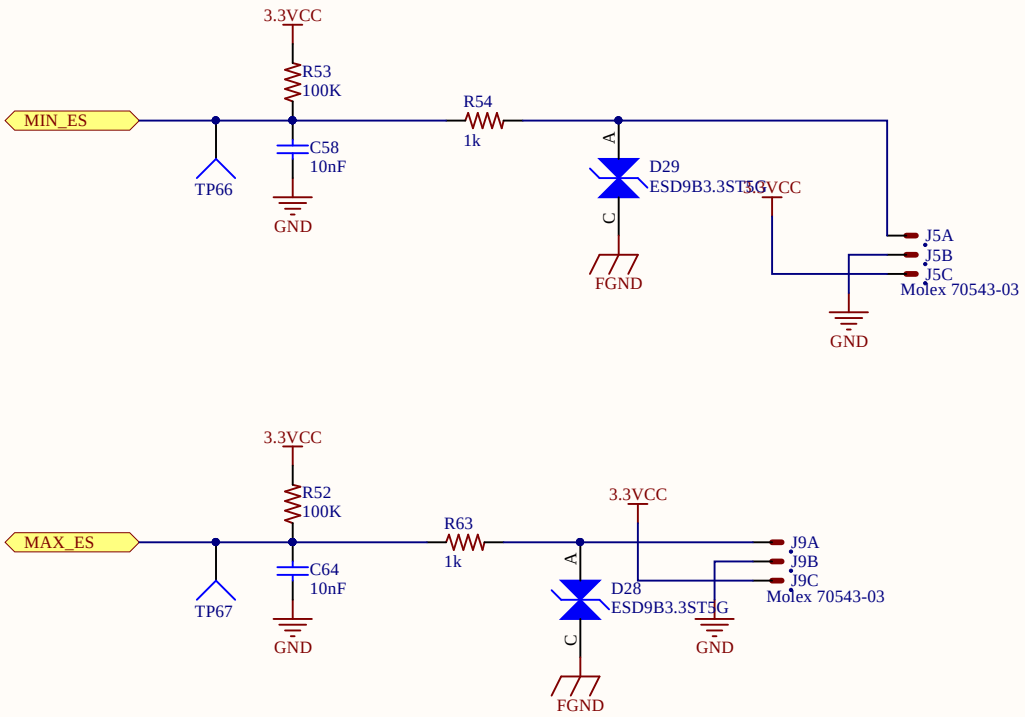

Title	Archim 0.2a Endstops	
Size: Letter	Number: 1004-001	Revision: A1A
Date: 11/13/2015		Sheet 7 of 8
File: C:\Users\..\EndStops.SchDoc		Drawn By: UltiMachine

End Stop Channel

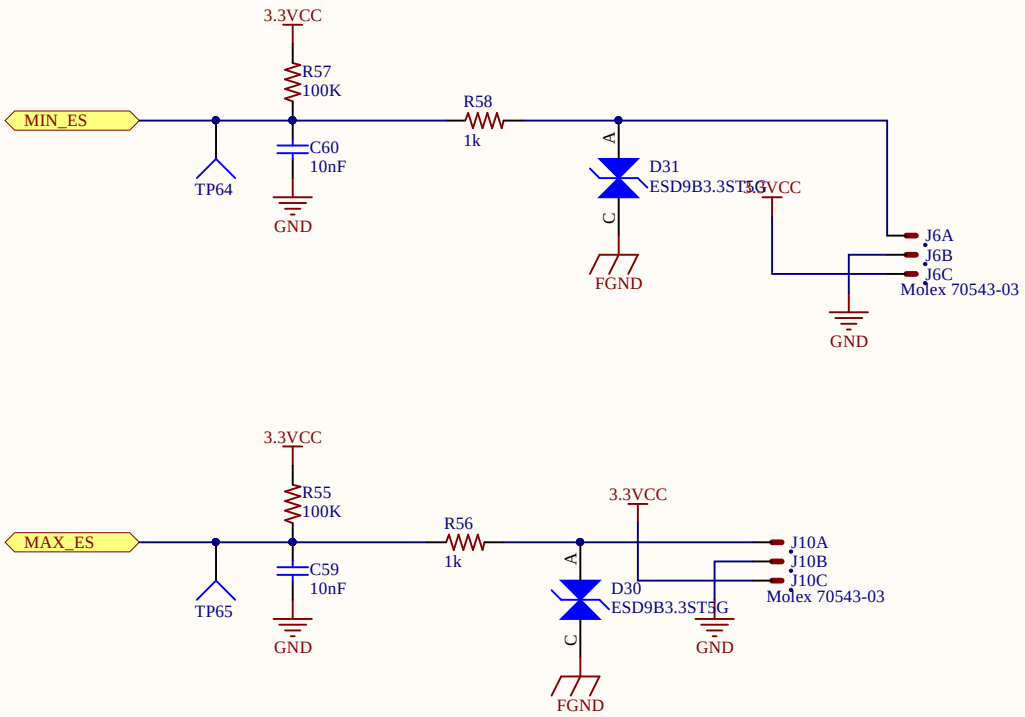

Title	Archim 0.2a Endstops	
Size: Letter	Number: 1004-001	Revision: A1A
Date: 11/13/2015		Sheet 7 of 8
File: C:\Users\..\EndStops.SchDoc		Drawn By: UltiMachine

End Stop Channel

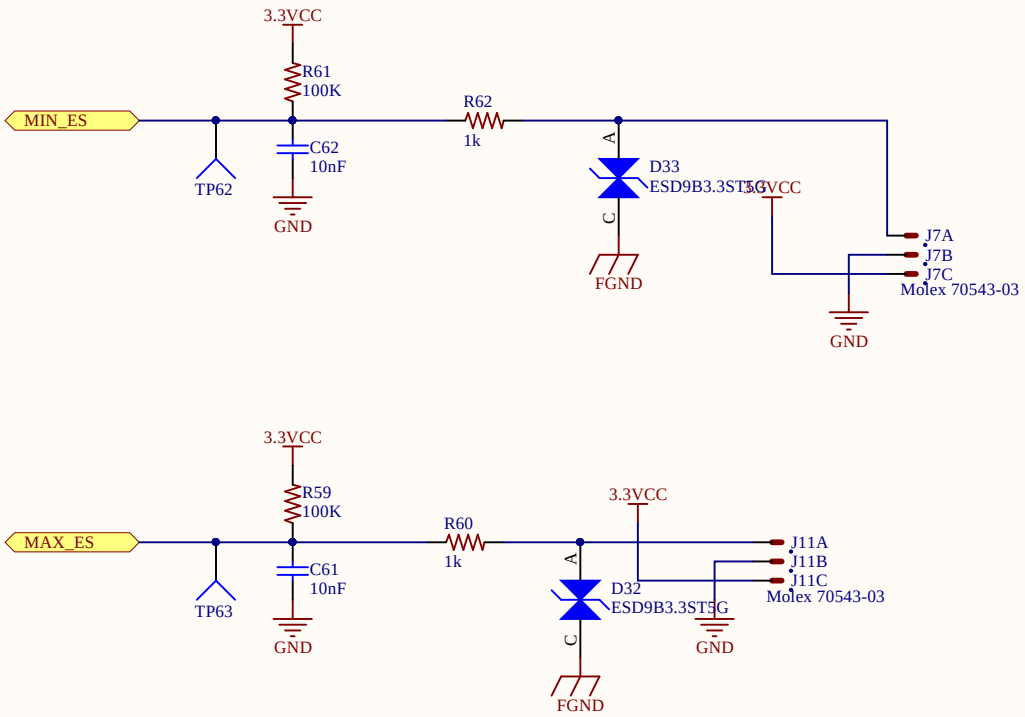

Title	Archim 0.2a Endstops	
Size: Letter	Number: 1004-001	Revision: A1A
Date: 11/13/2015		Sheet 7 of 8
File: C:\Users\..\EndStops.SchDoc		Drawn By: UltiMachine

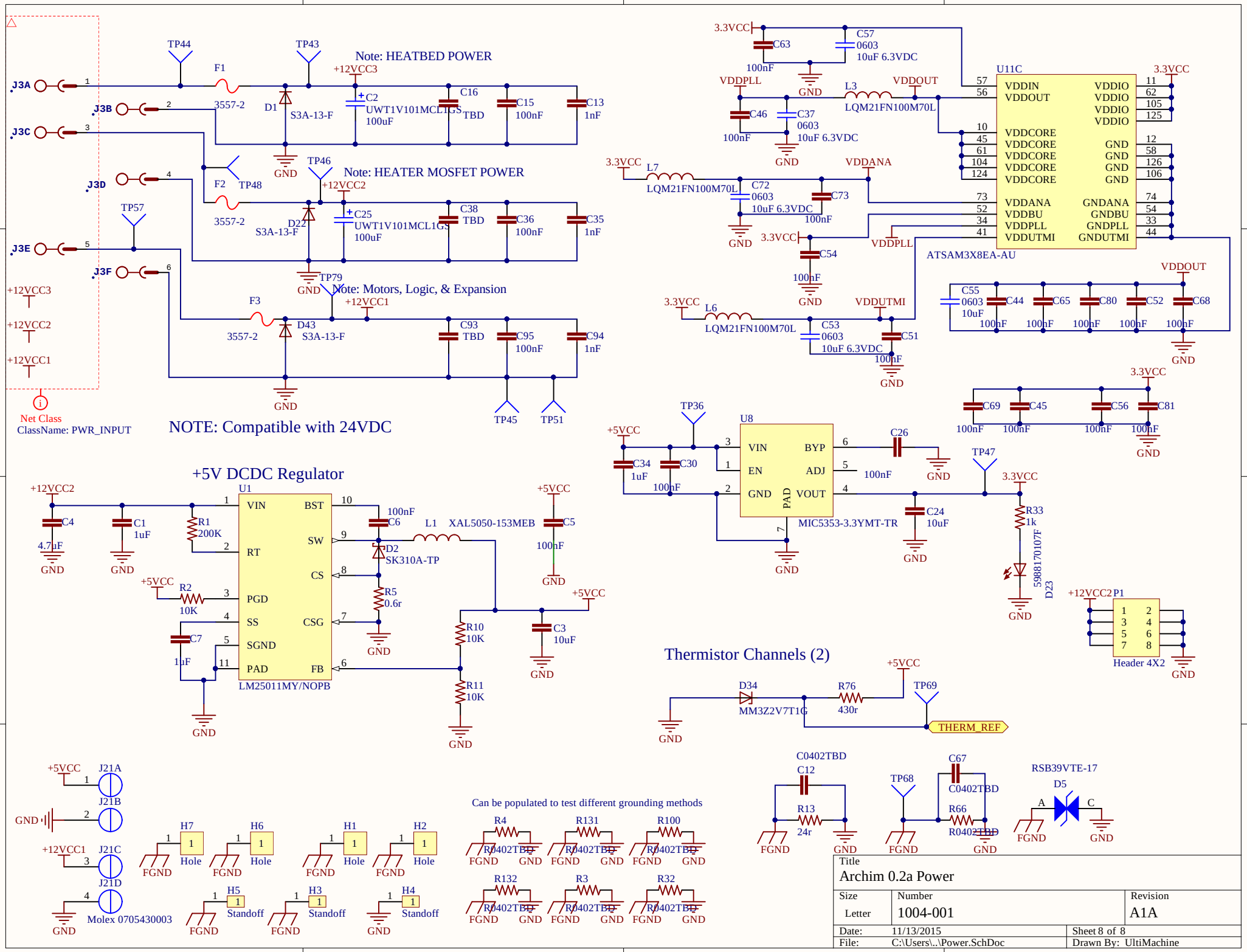
Note: HEATBED POWER
Note: HEATER MOSFET POWER
Note: Motors, Logic, & Expansion
NOTE: Compatible with 24VDC
Net Class
ClassName: PWR_INPUT
+5V DCDC Regulator
LM25011MY/NOPB
XAL5050-153MEB
SK310A-TP
Thermistor Channels (2)
MM3Z2V7T1G
THERM_REF
ATSAM3X8EA-AU
MIC5353-3.3YMT-TR
Header 4X2
Molex 0705430003
Can be populated to test different grounding methods
Title
Archim 0.2a Power
Size
Letter
Number
1004-001
Revision
A1A
Date: 11/13/2015
Sheet 8 of 8
File: C:\Users\..\Power.SchDoc
Drawn By: UltiMachine

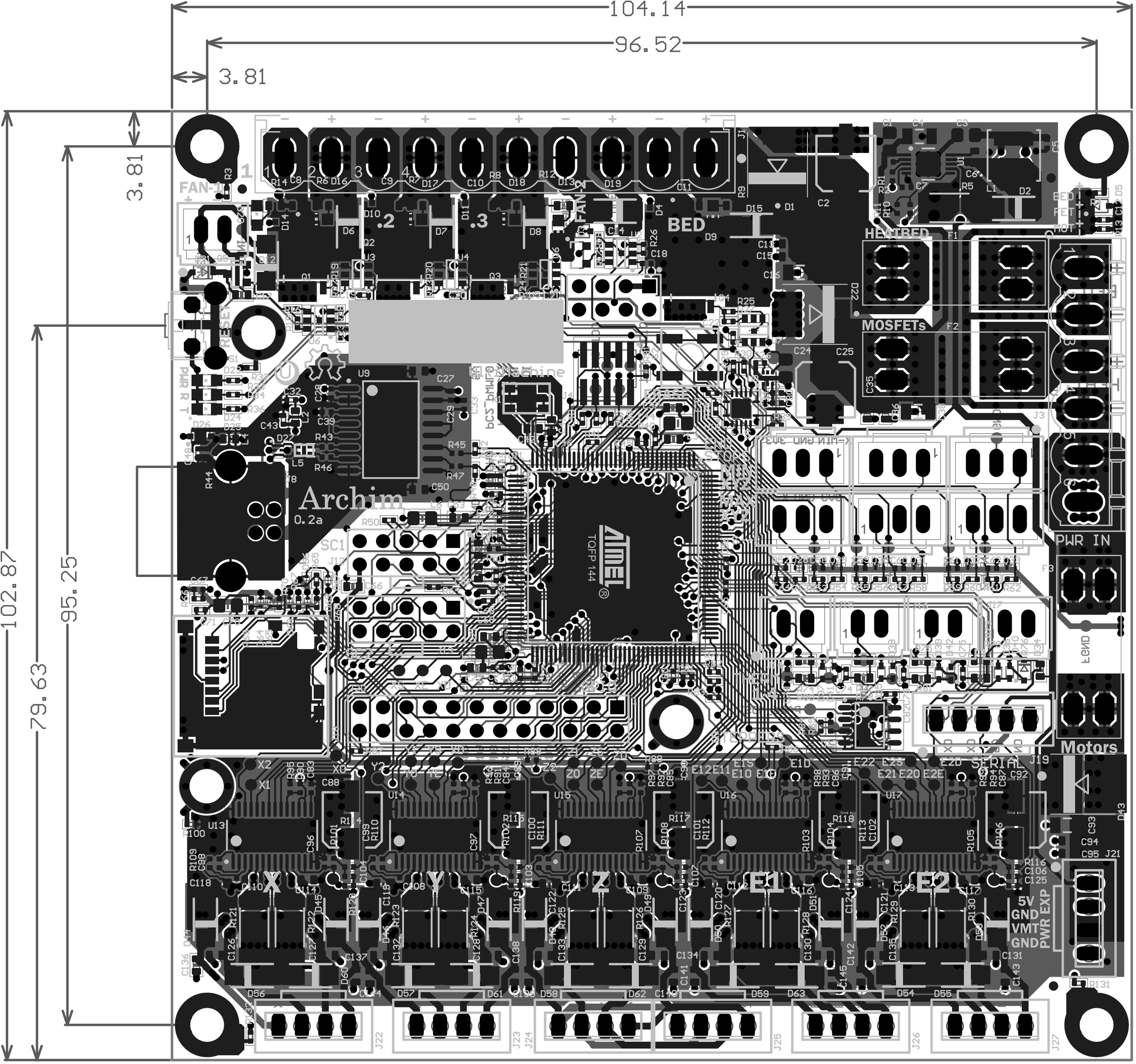
104.14
96.52
3.81
3.81
102.87
95.25
79.63
FAN-1
FAN-2
BED
HEATBED
MOSFETs
PWR IN
Motors
SERIAL
Archim
0.2a
TQFP 144
X
Y
Z
E1
E2
5V
GND
VMT
GND
PWR EXP

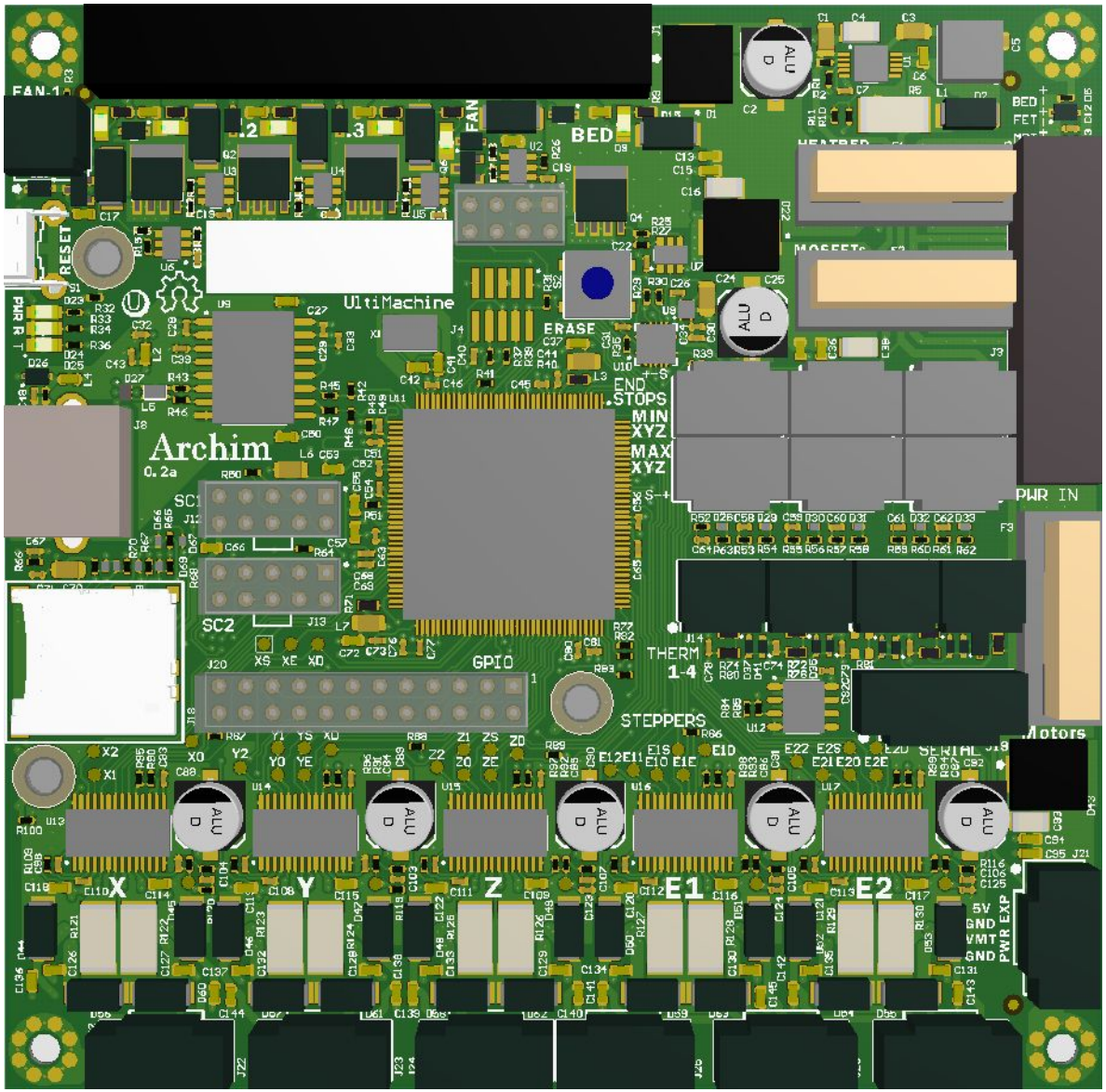
FAN-1
RESET
PWR
UltiMachine
Archim
0.2a
SC1
SC2
GPIO
ERASE
END STOPS
MIN XYZ
MAX XYZ
THERM 1-4
STEPPERS
BED
FAN
BED FET
HEATED
MOSFETs
PWR IN
Motors
SERIAL
X
Y
Z
E1
E2
5V
GND
VMT
GND
PWR EXP