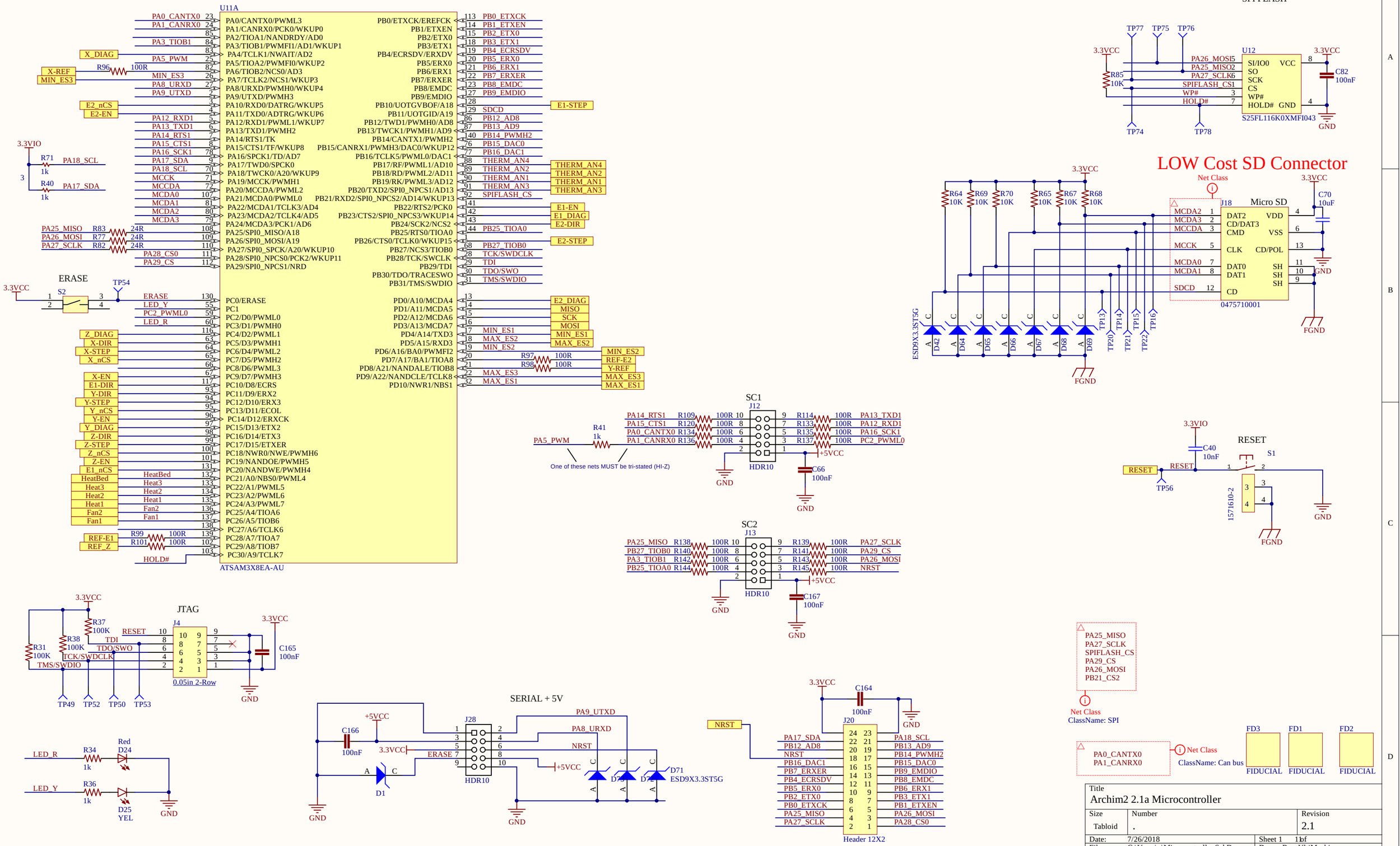
U11A
ATSAM3X8EA-AU
SPI FLASH
U12
S25FL116K0XMFI043
LOW Cost SD Connector
Micro SD
0475710001
ERASE
S2
SC1
J12
HDR10
SC2
J13
RESET
S1
JTAG
J4
0.05in 2-Row
SERIAL + 5V
J28
J20
Header 12X2
Net Class
ClassName: SPI
ClassName: Can bus
FIDUCIAL
Title
Archim2 2.1a Microcontroller
Size
Tabloid
Number
.
Revision
2.1
Date: 7/26/2018
Sheet 1 of 1
File: C:\Users\..\Microcontroller.SchDoc
Drawn By: UltiMachine

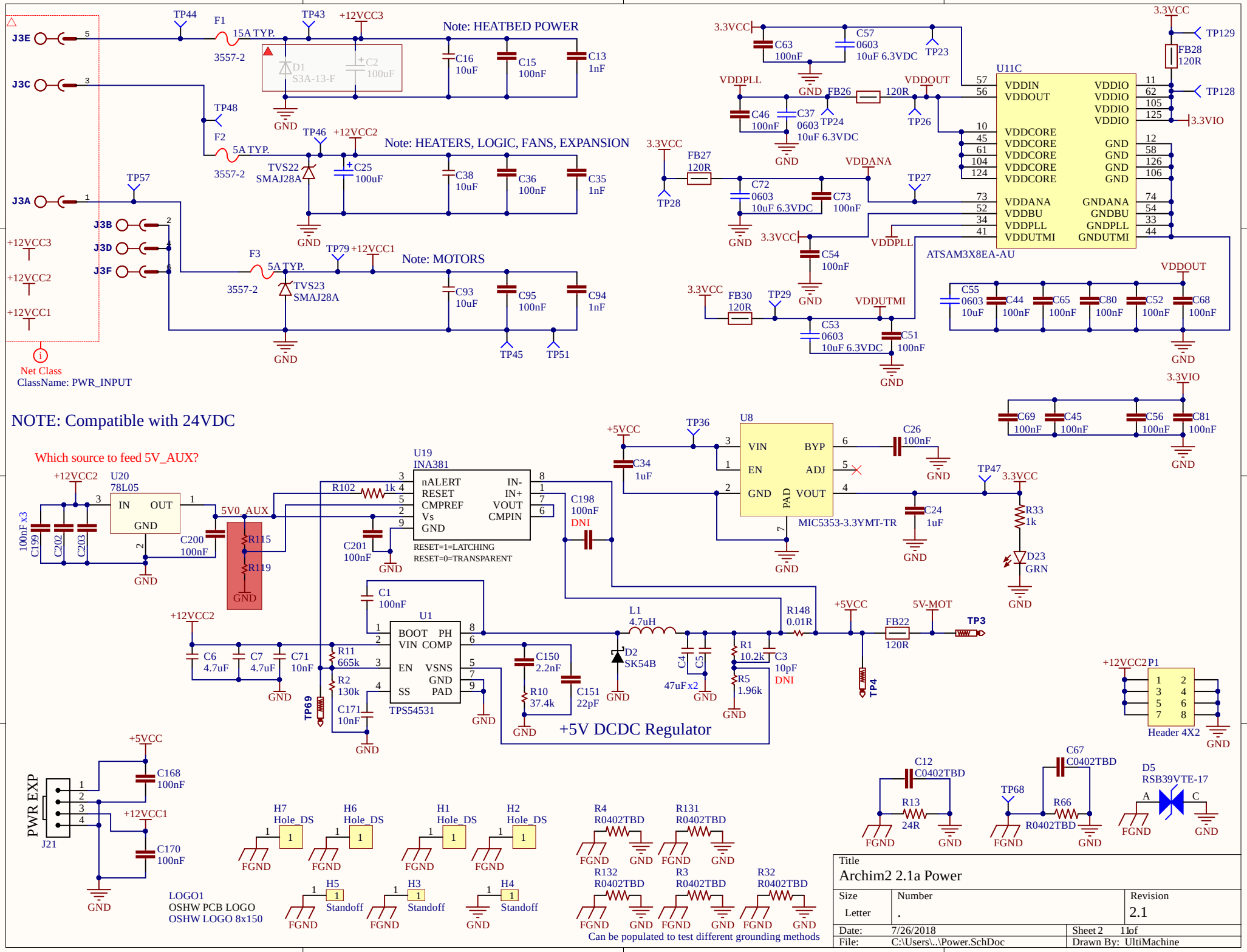
Note: HEATBED POWER
Note: HEATERS, LOGIC, FANS, EXPANSION
Note: MOTORS
J3E
J3C
J3A
J3B
J3D
J3F
F1 15A TYP.
F2 5A TYP.
F3 5A TYP.
3557-2
TVS22 SMAJ28A
TVS23 SMAJ28A
D1 S3A-13-F
C2 100uF
+12VCC3
+12VCC2
+12VCC1
Net Class
ClassName: PWR_INPUT
U11C
ATSAM3X8EA-AU
VDDIN
VDDOUT
VDDCORE
VDDANA
VDDBU
VDDPLL
VDDUTMI
VDDIO
GND
GNDANA
GNDBU
GNDPLL
GNDUTMI
3.3VCC
3.3VIO
VDDPLL
VDDOUT
VDDANA
VDDUTMI
FB28 120R
FB26 120R
FB27 120R
FB30 120R
NOTE: Compatible with 24VDC
Which source to feed 5V_AUX?
U20 78L05
IN OUT GND
5V0_AUX
U19 INA381
nALERT RESET CMPREF Vs GND
IN- IN+ VOUT CMPIN
RESET=1=LATCHING
RESET=0=TRANSPARENT
U8 MIC5353-3.3YMT-TR
VIN EN GND PAD BYP ADJ VOUT
U1 TPS54531
BOOT PH VIN COMP EN VSNS GND SS PAD
+5V DCDC Regulator
L1 4.7uH
D2 SK54B
R148 0.01R
5V-MOT
FB22 120R
TP3
TP4
TP69
D23 GRN
P1 Header 4X2
PWR EXP
J21
+5VCC
+12VCC1
LOGO1
OSHW PCB LOGO
OSHW LOGO 8x150
H7 Hole_DS
H6 Hole_DS
H1 Hole_DS
H2 Hole_DS
H5 Standoff
H3 Standoff
H4 Standoff
FGND
R4 R0402TBD
R131 R0402TBD
R132 R0402TBD
R3 R0402TBD
R32 R0402TBD
Can be populated to test different grounding methods
C12 C0402TBD
R13 24R
C67 C0402TBD
R66 R0402TBD
TP68
D5 RSB39VTE-17
Title
Archim2 2.1a Power
Size Letter
Number .
Revision 2.1
Date: 7/26/2018
Sheet 2 1of
File: C:\Users\..\Power.SchDoc
Drawn By: UltiMachine

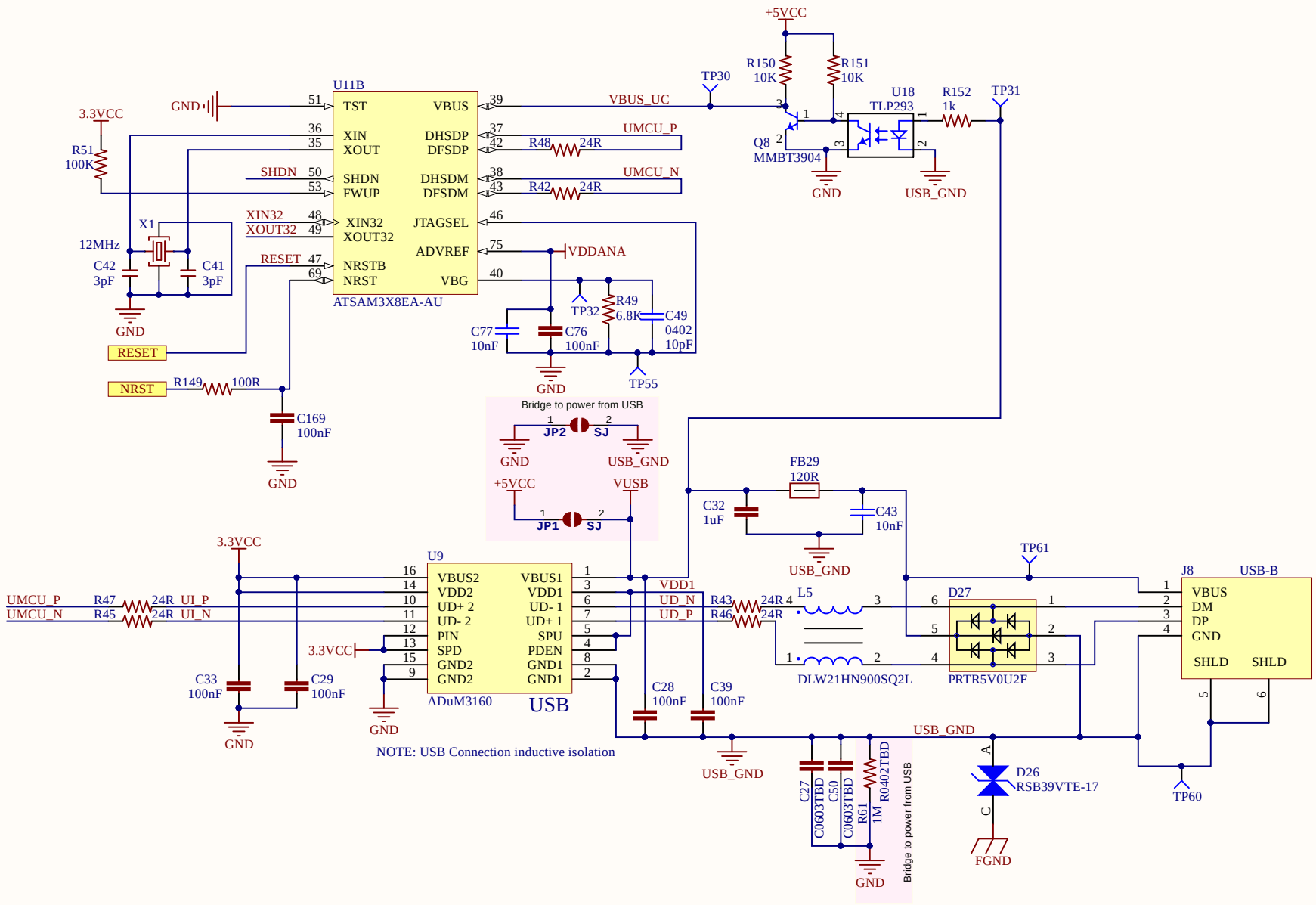

Title	Archim2 2.1a USB	
Size: Letter	Number: .	Revision: 2.1
Date: 7/26/2018	Sheet 3 1of	
File: C:\Users\..\USB.SchDoc	Drawn By: UltiMachine	

End Stop Channels

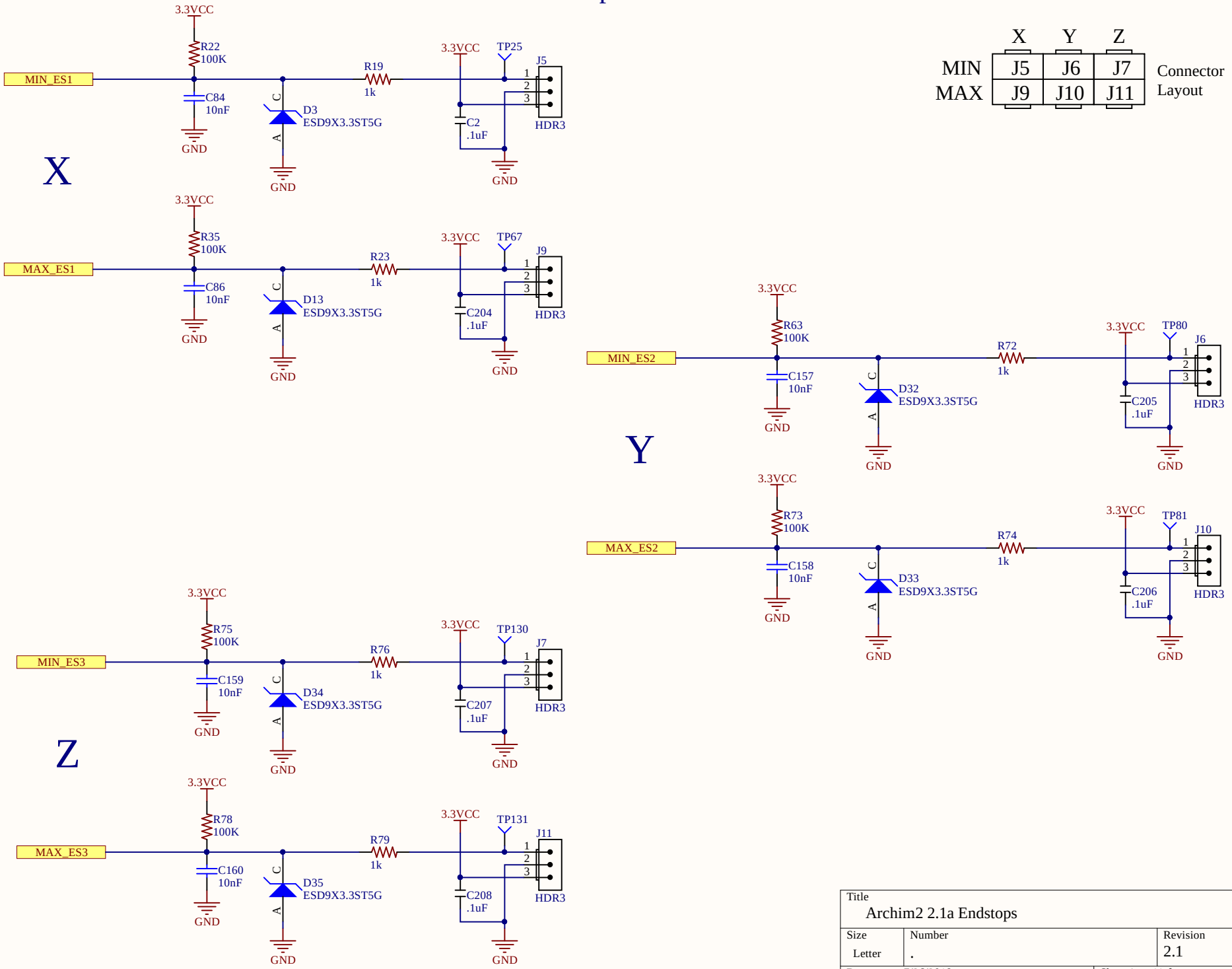

Title	Archim2 2.1a Endstops	
Size: Letter	Number: .	Revision: 2.1
Date: 7/26/2018	Sheet 4 1of	
File: C:\Users\..\EndStops.SchDoc	Drawn By: UltiMachine	

Motor-X

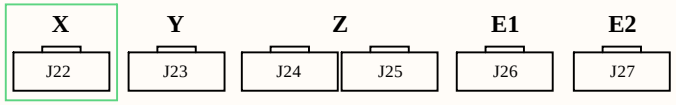

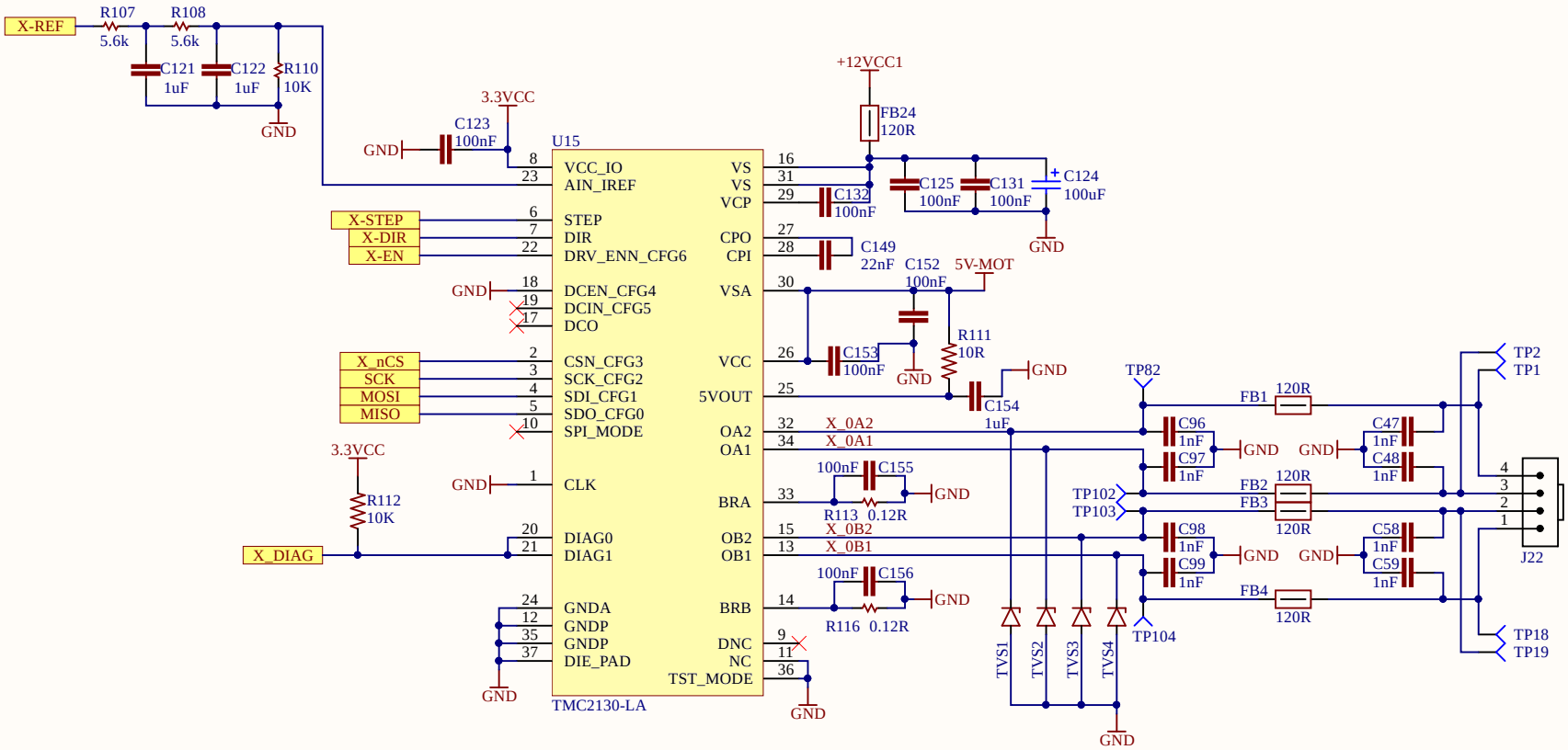

Title	Archim2 2.1a Motor-X	
Size: Letter	Number: .	Revision: 2.1
Date: 7/26/2018		Sheet 5 11of
File: C:\Users\..\Motor-X.SchDoc		Drawn By: UltiMachine

Motor-Y

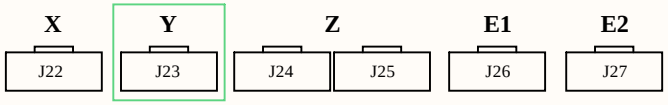

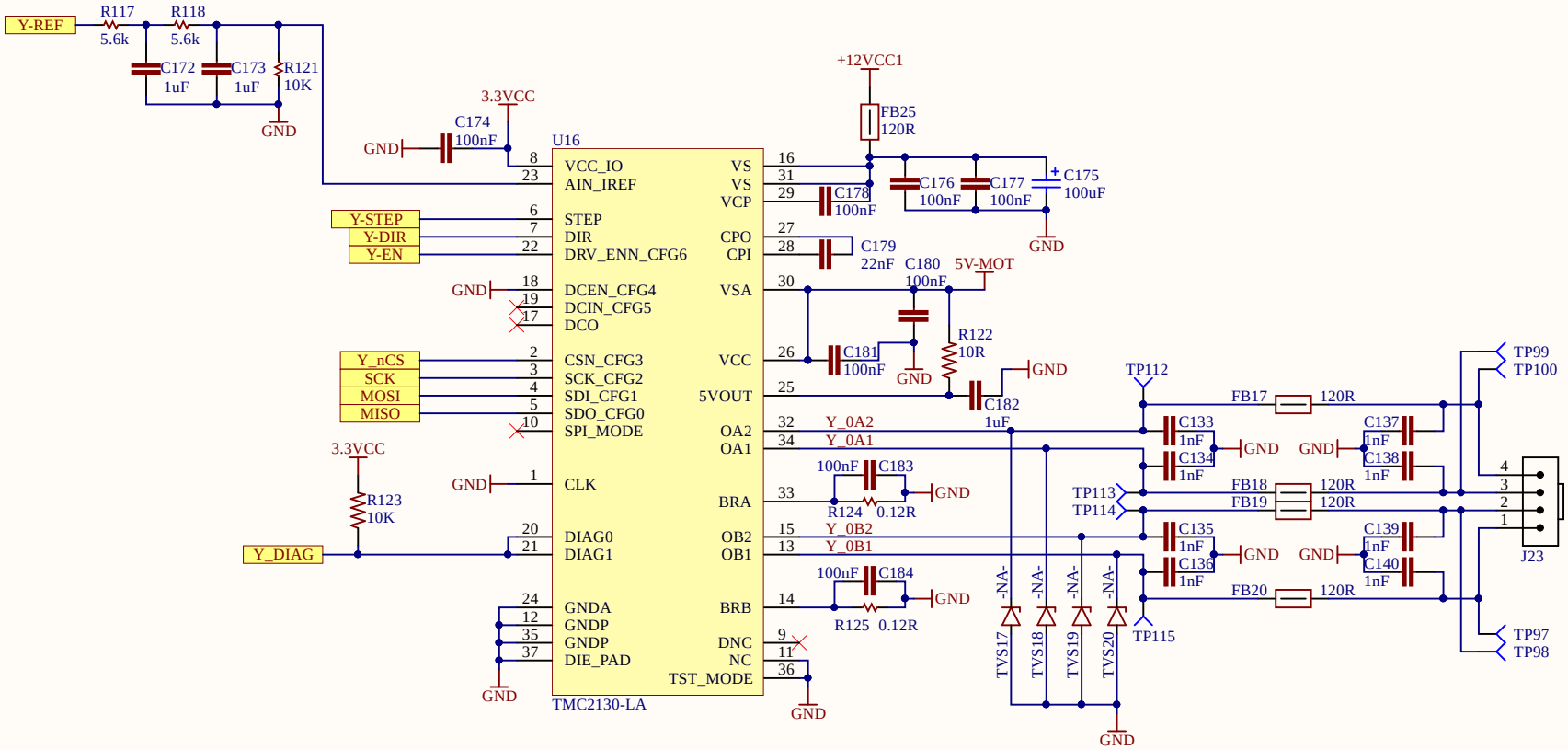

Title		
Archim2 2.1a Motor-Y		
Size: Letter	Number: .	Revision: 2.1
Date: 7/26/2018		Sheet 6 1of
File: C:\Users\..\Motor-Y.SchDoc		Drawn By: UltiMachine

Motor-Z

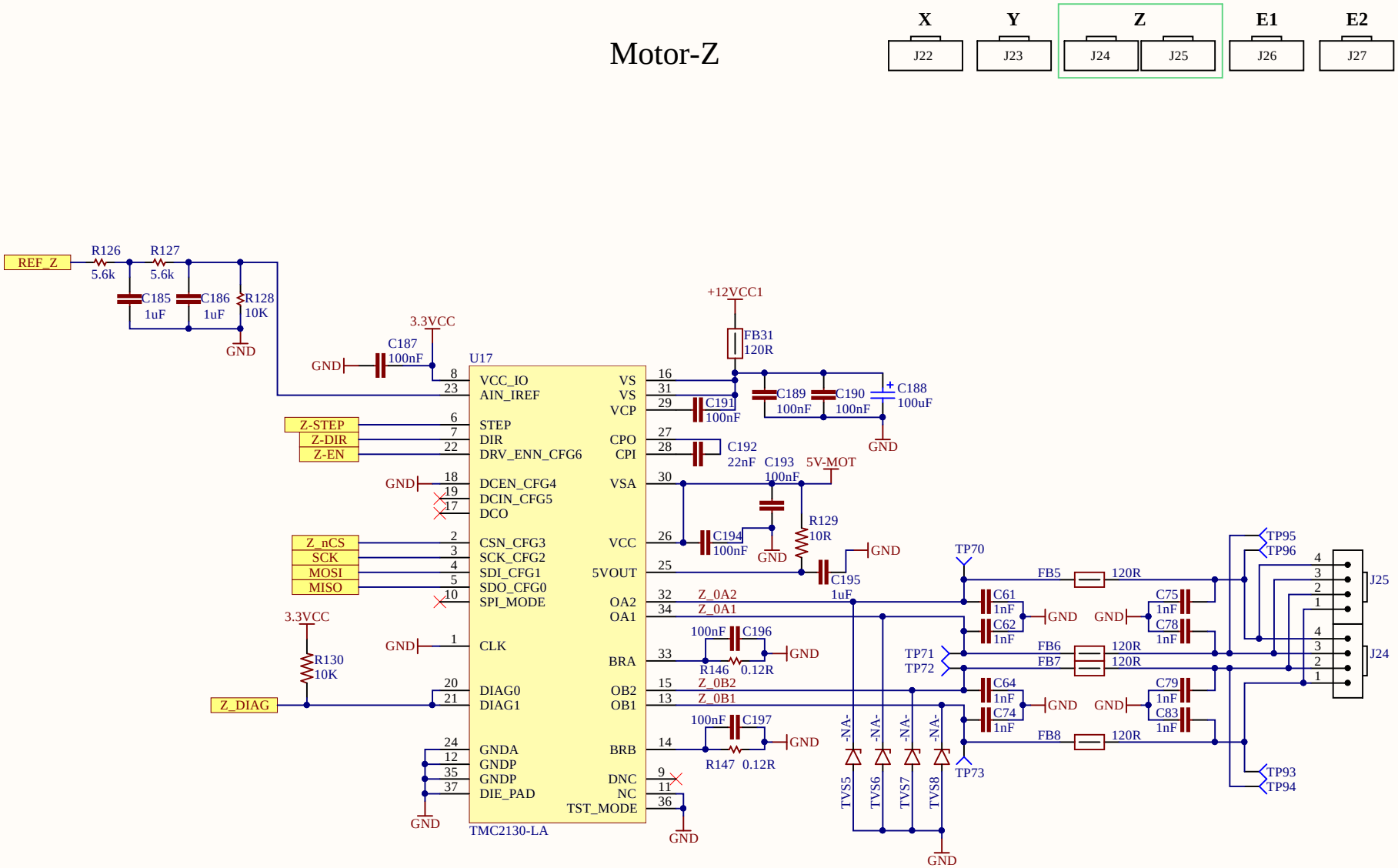

Title		
Archim2 2.1a Motor-Z		
Size: Letter	Number: .	Revision: 2.1
Date: 7/26/2018		Sheet 7 11of
File: C:\Users\..\Motor-Z.SchDoc		Drawn By: UltiMachine

Motor-E1

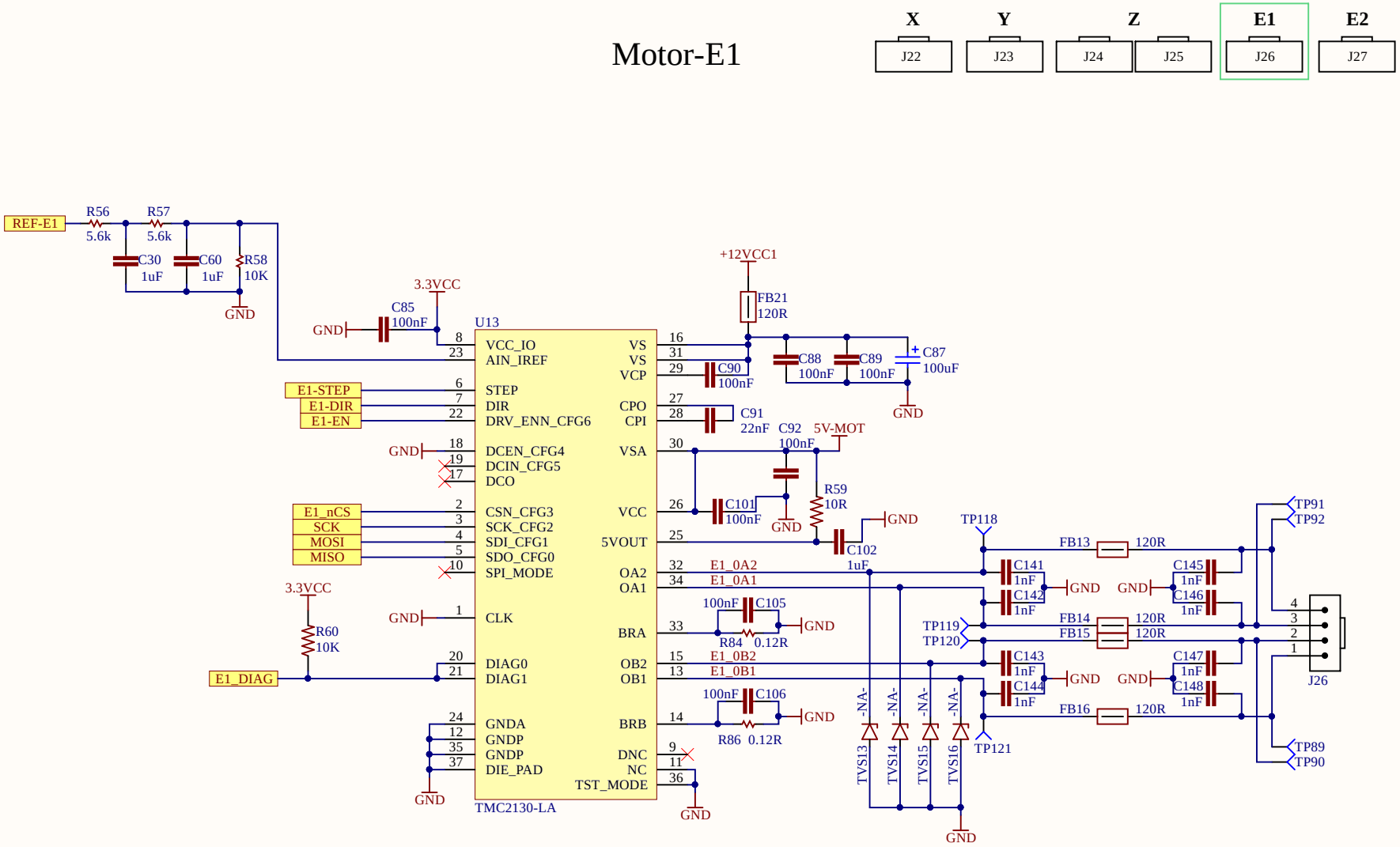

Title		
Archim2 2.1a Motor-E1		
Size: Letter	Number: .	Revision: 2.1
Date: 7/26/2018		Sheet 8 1of
File: C:\Users\..\Motor-E1.SchDoc		Drawn By: UltiMachine

Motor-E2

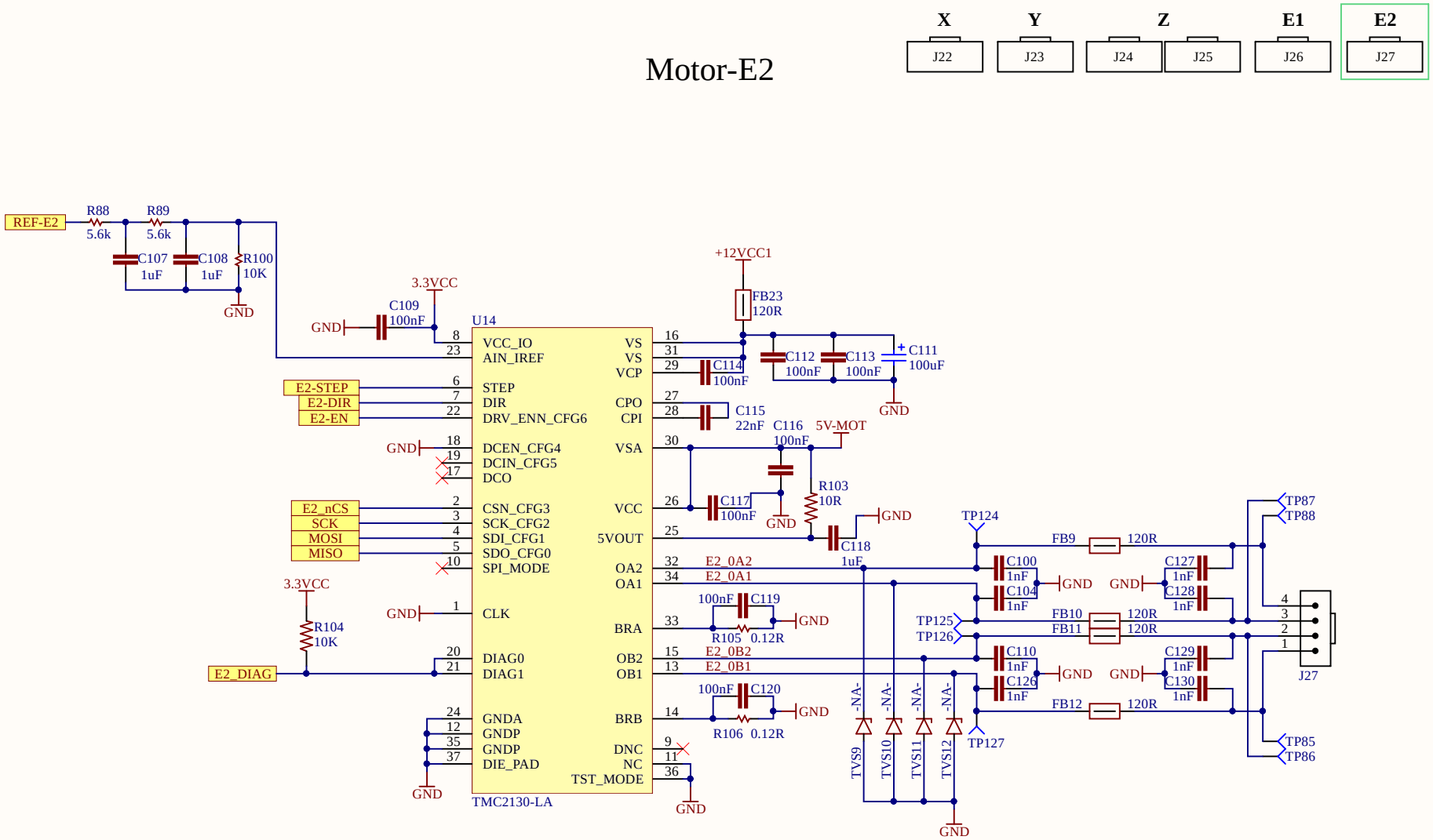

Title		
Archim2 2.1a Motor-E2		
Size: Letter	Number: .	Revision: 2.1
Date: 7/26/2018		Sheet 9 11of
File: C:\Users\..\Motor-E2.SchDoc		Drawn By: UltiMachine

Thermistor Channels

Thermistor Connector Layout

1	2	3	4
J14	J15	J16	J17

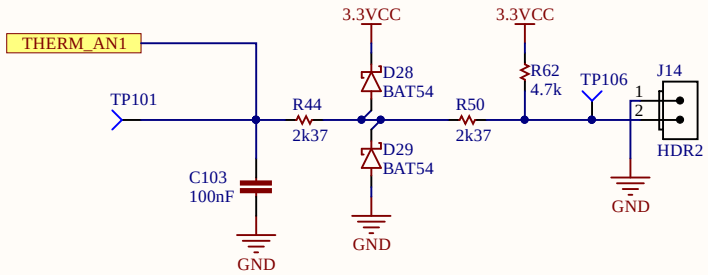

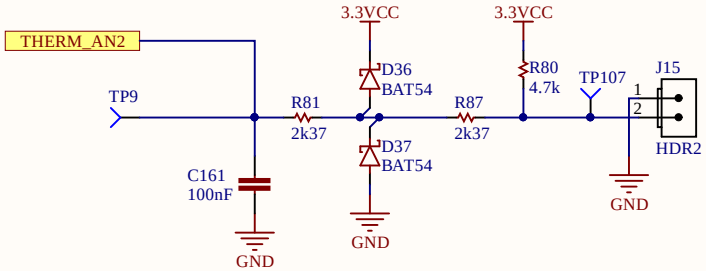

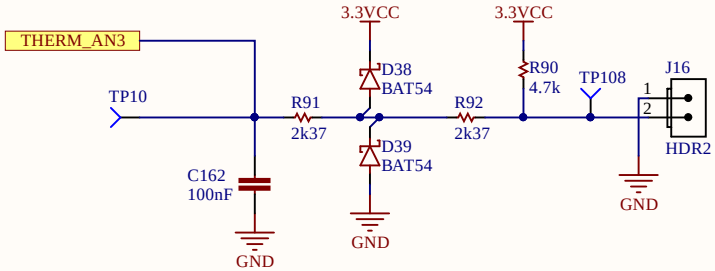

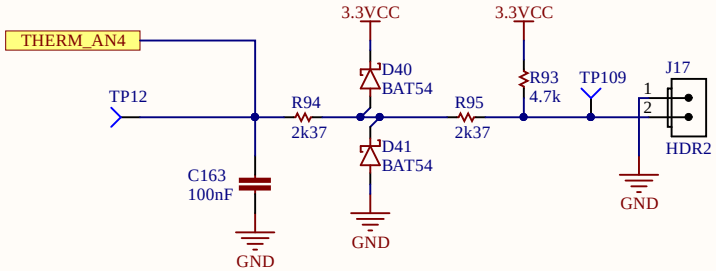

Title	Archim2 2.1a Thermistors	
Size: Letter	Number: .	Revision: 2.1
Date: 7/26/2018		Sheet 10 1of
File: C:\Users\..\Thermistors.SchDoc		Drawn By: UltiMachine

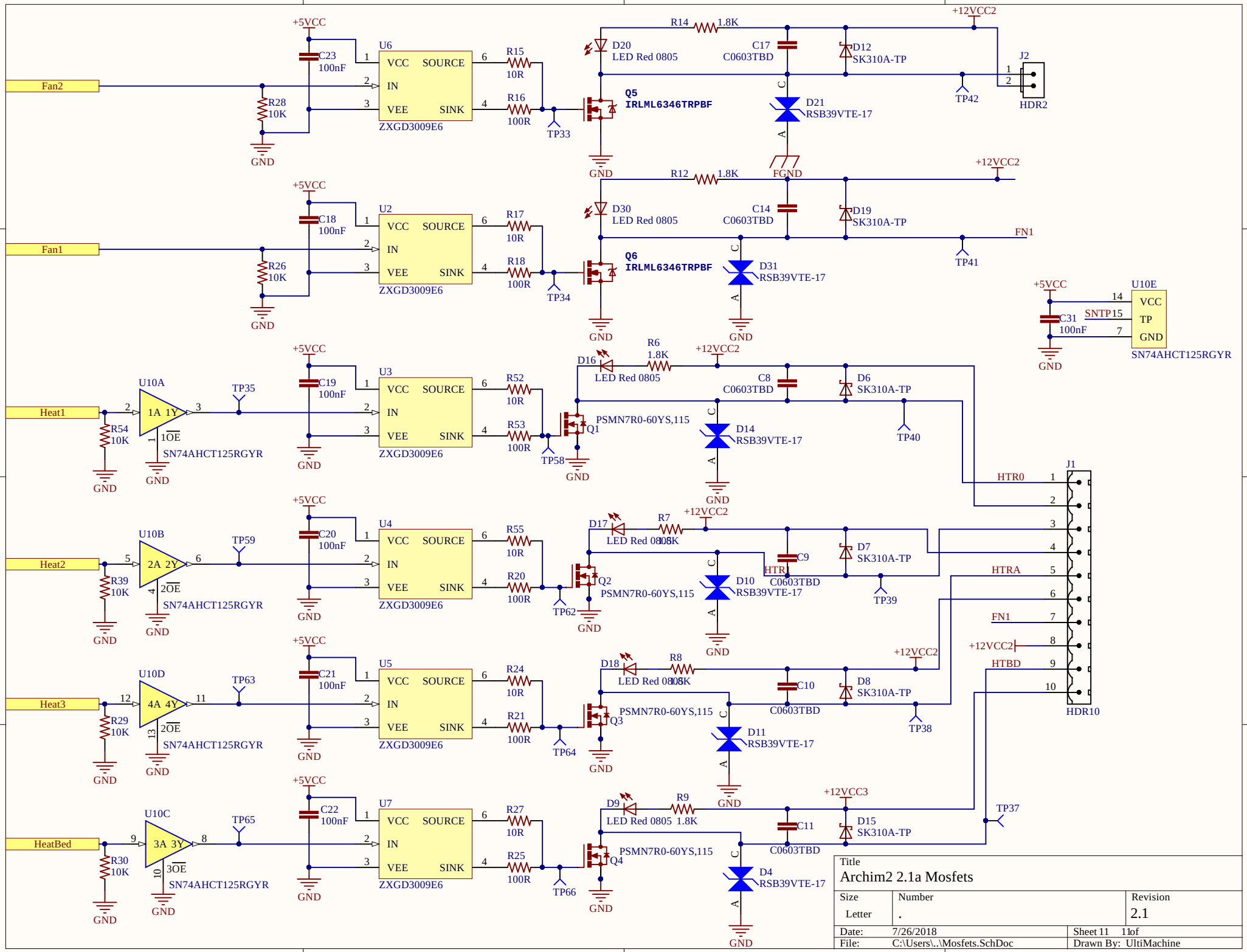
Fan2
Fan1
Heat1
Heat2
Heat3
HeatBed
+5VCC
+12VCC2
+12VCC3
U6
U2
U3
U4
U5
U7
VCC
SOURCE
IN
VEE
SINK
ZXGD3009E6
C23 100nF
C18 100nF
C19 100nF
C20 100nF
C21 100nF
C22 100nF
R28 10K
R26 10K
R54 10K
R39 10K
R29 10K
R30 10K
R15 10R
R16 100R
R17 10R
R18 100R
R52 10R
R53 100R
R55 10R
R20 100R
R24 10R
R21 100R
R27 10R
R25 100R
TP33
TP34
TP35
TP58
TP59
TP62
TP63
TP64
TP65
TP66
U10A
U10B
U10D
U10C
1A 1Y
2A 2Y
4A 4Y
3A 3Y
1OE
2OE
3OE
SN74AHCT125RGYR
Q5
IRLML6346TRPBF
Q6
IRLML6346TRPBF
Q1
Q2
Q3
Q4
PSMN7R0-60YS,115
D20
D30
D16
D17
D18
D9
LED Red 0805
R14 1.8K
R12 1.8K
R6 1.8K
R7 1.8K
R8 1.8K
R9 1.8K
C17 C0603TBD
C14 C0603TBD
C8 C0603TBD
C9 C0603TBD
C10 C0603TBD
C11 C0603TBD
D12 SK310A-TP
D19 SK310A-TP
D6 SK310A-TP
D7 SK310A-TP
D8 SK310A-TP
D15 SK310A-TP
D21 RSB39VTE-17
D31 RSB39VTE-17
D14 RSB39VTE-17
D10 RSB39VTE-17
D11 RSB39VTE-17
D4 RSB39VTE-17
TP42
TP41
TP40
TP39
TP38
TP37
J2
HDR2
J1
HDR10
HTR0
HTRA
HTRB
HTBD
FN1
FGND
GND
U10E
VCC
TP
GND
SN74AHCT125RGYR
C31 100nF
SNTP
Title
Archim2 2.1a Mosfets
Size
Letter
Number
.
Revision
2.1
Date: 7/26/2018
Sheet 11 of 11
File: C:\Users\..\Mosfets.SchDoc
Drawn By: UltiMachine

- Added 5V-MOT net

ST 78L05ABUTR, $0.105@2k5
Diodes Inc. AS78L05RTR-G1, $0.063@2k

Title			
Size A	Number		Revision
Date:	7/26/2018	Sheet	of
File:	C:\Users\..\TitlePage.SchDoc	Drawn By:	