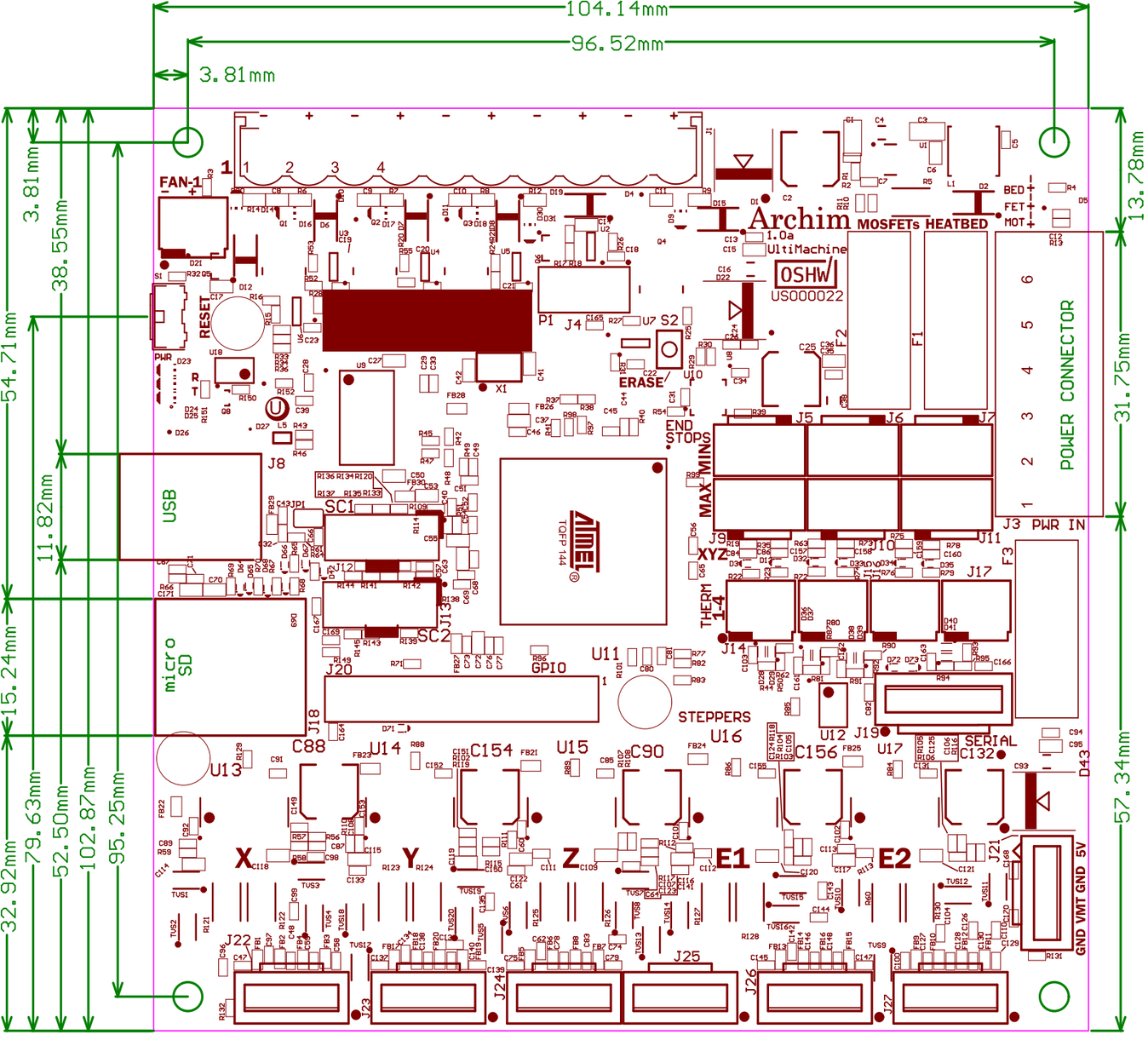
104.14mm
96.52mm
3.81mm
3.81mm
38.55mm
54.71mm
11.82mm
15.24mm
32.92mm
79.63mm
52.50mm
102.87mm
95.25mm
13.78mm
31.75mm
57.34mm
FAN-1
RESET
PWR
USB
micro SD
Archim
1.0a
UltiMachine
OSHW
US000022
MOSFETs HEATBED
BED
FET
MOT
POWER CONNECTOR
J3 PWR IN
ERASE
END STOPS
MAX
MIN
XYZ
THERM 1-4
GPIO
STEPPERS
SERIAL
GND VMT GND 5V
X
Y
Z
E1
E2
TQFP 144

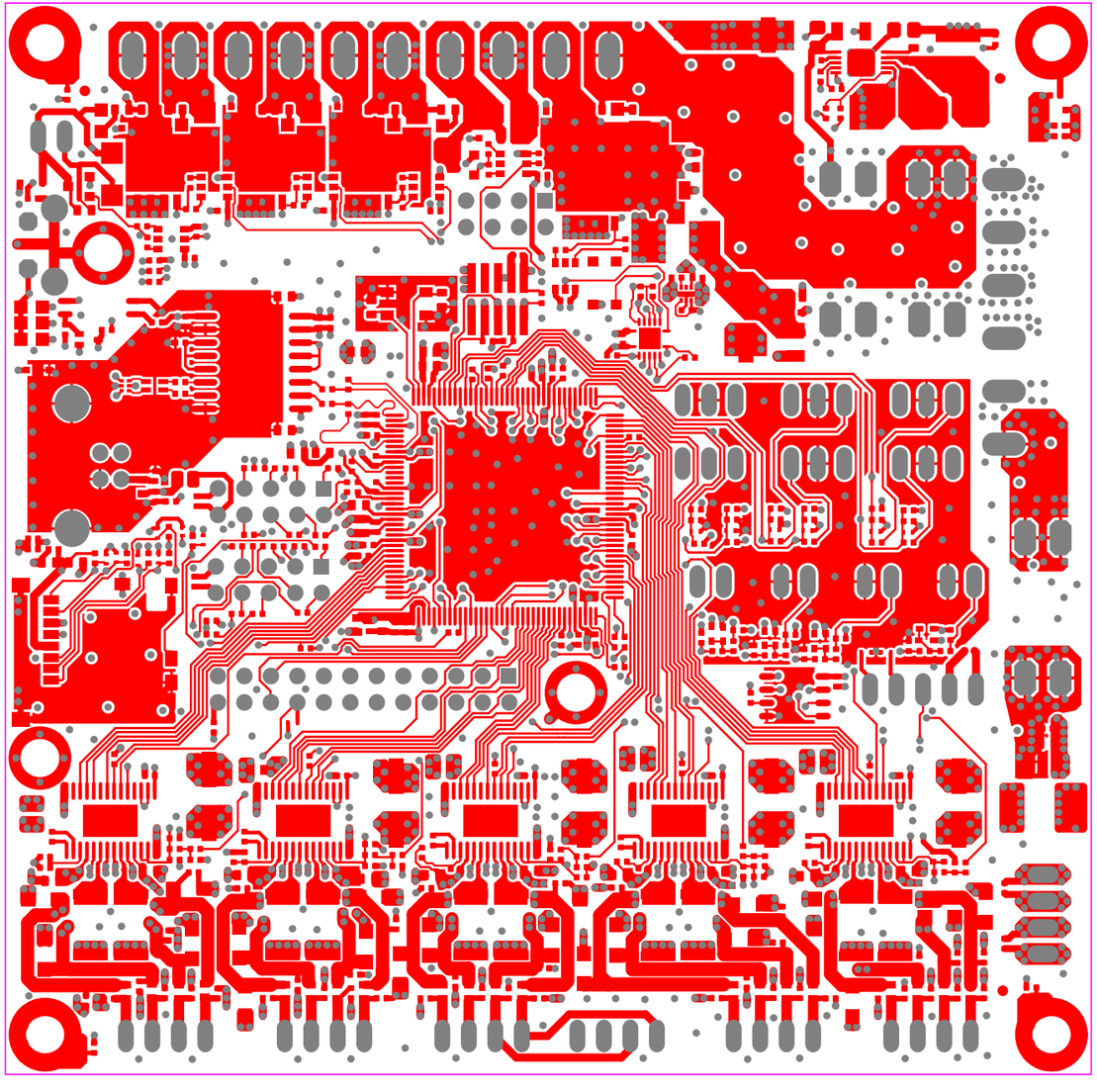

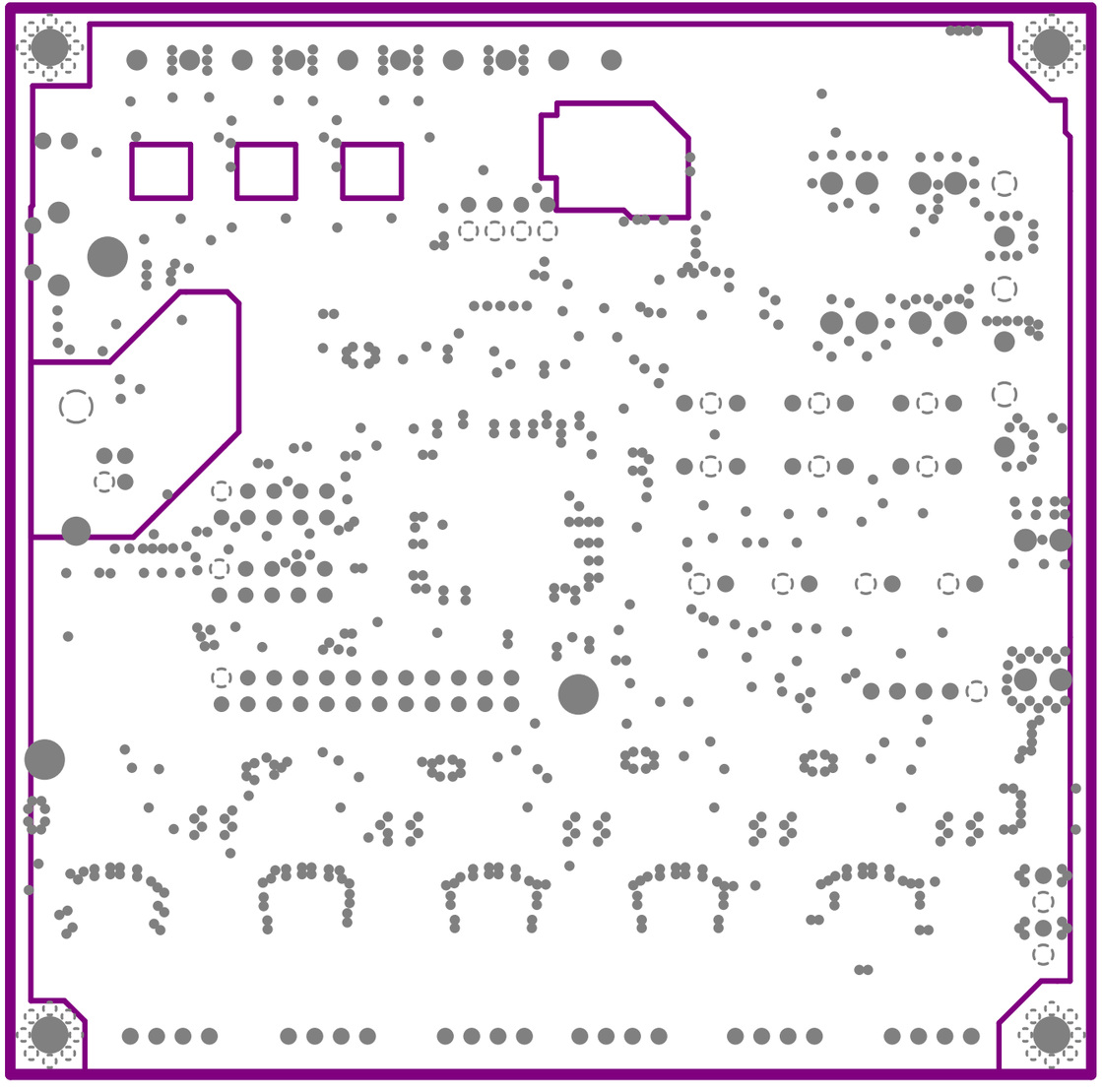

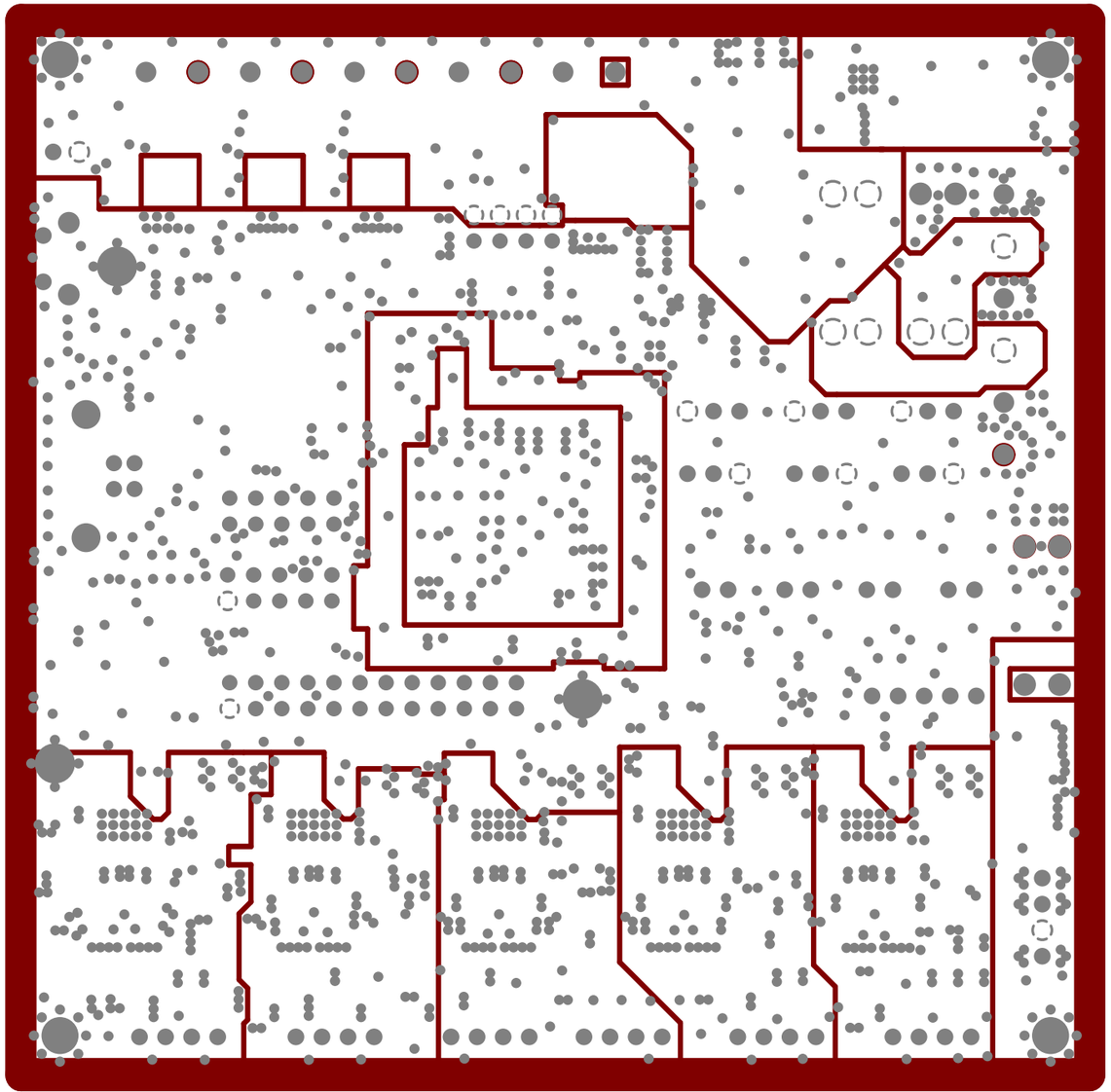

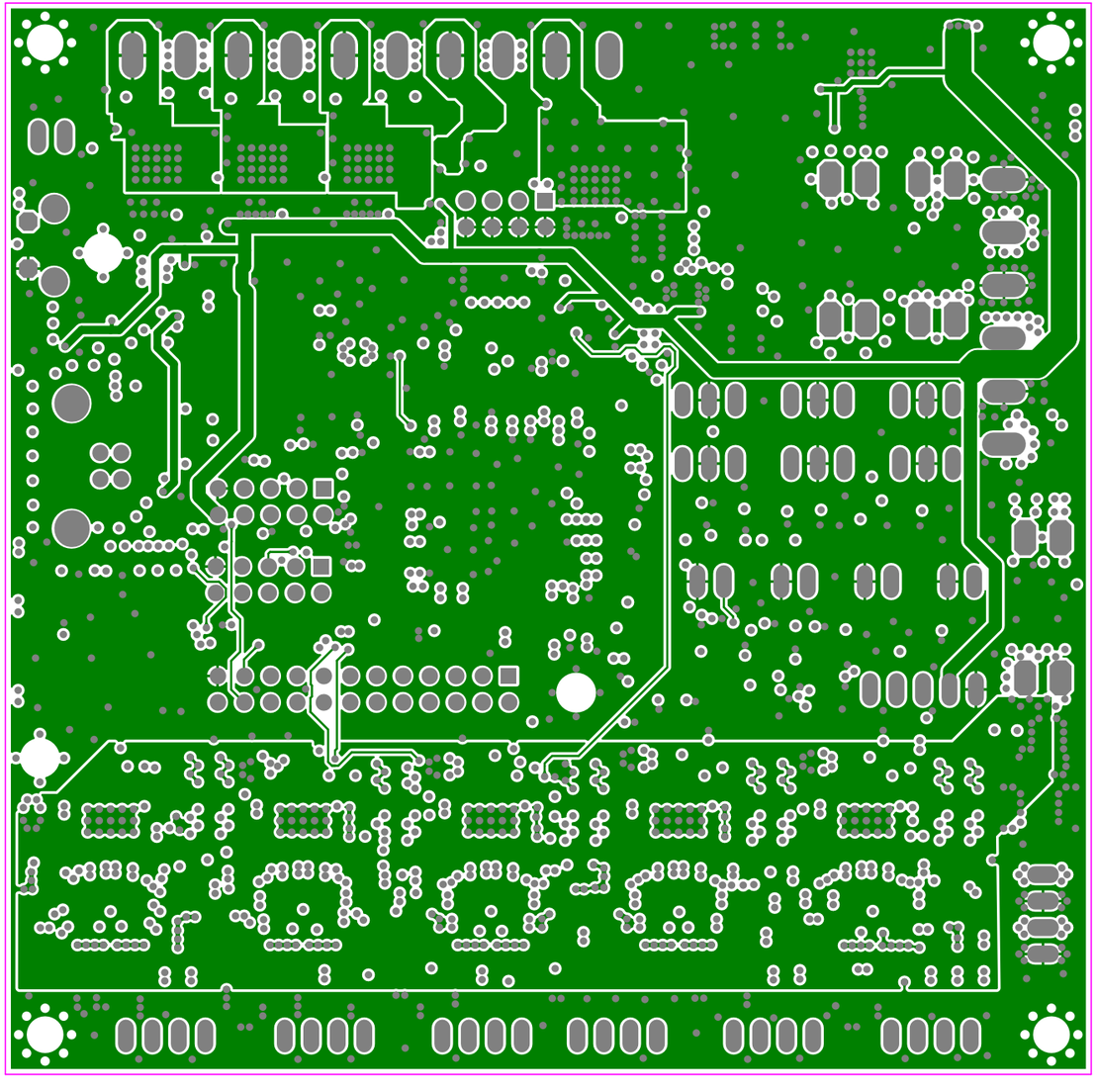

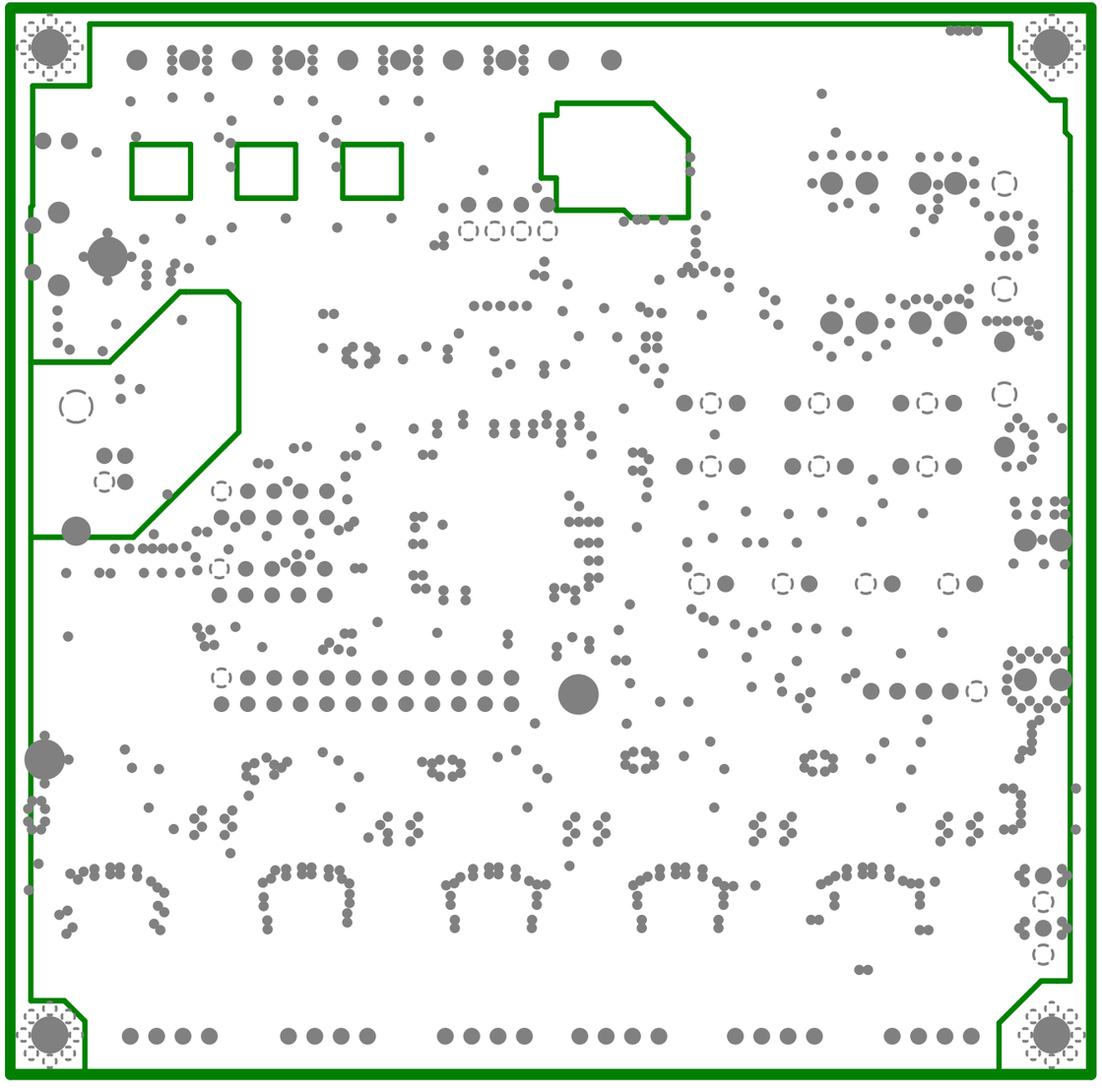

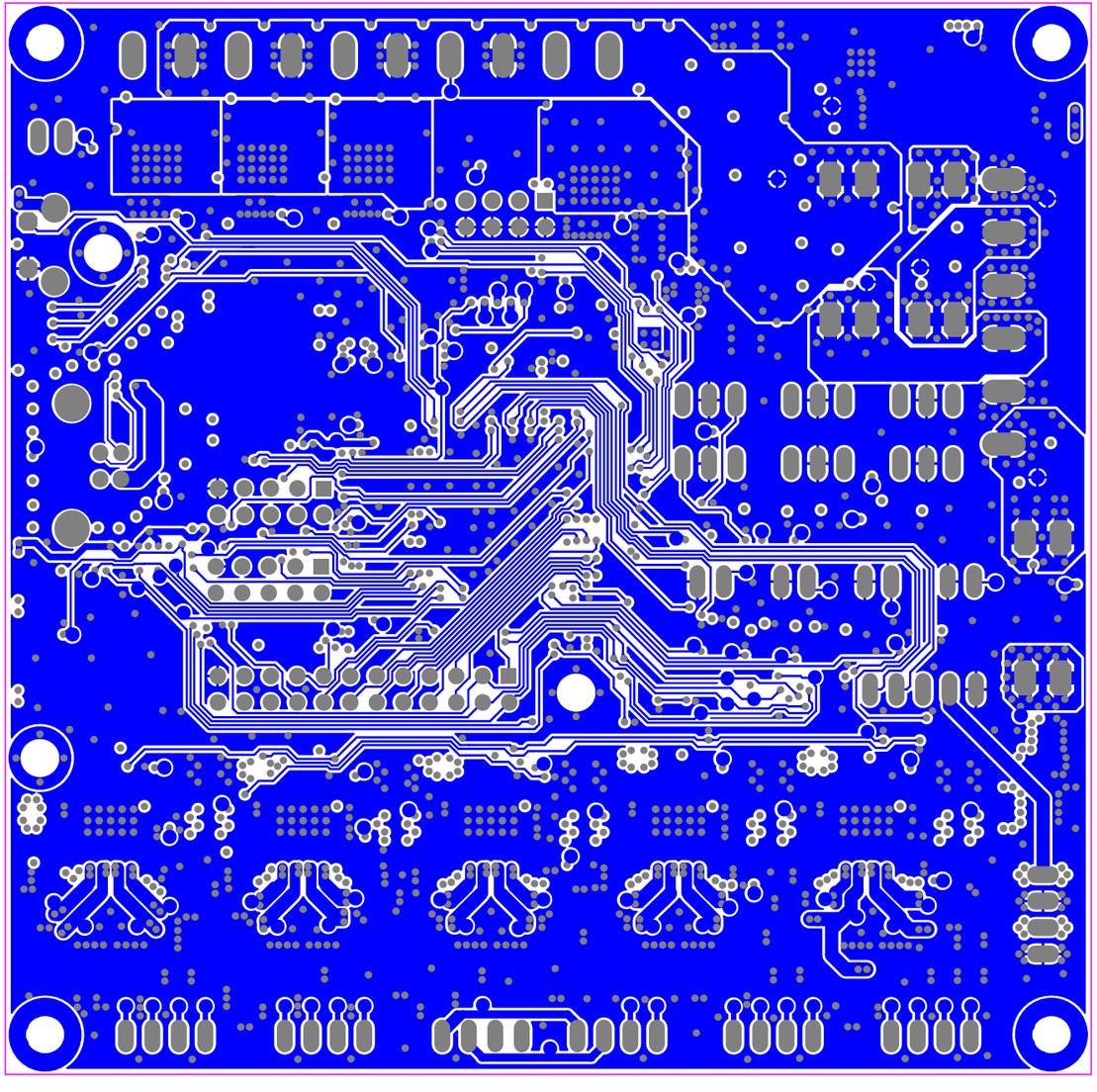

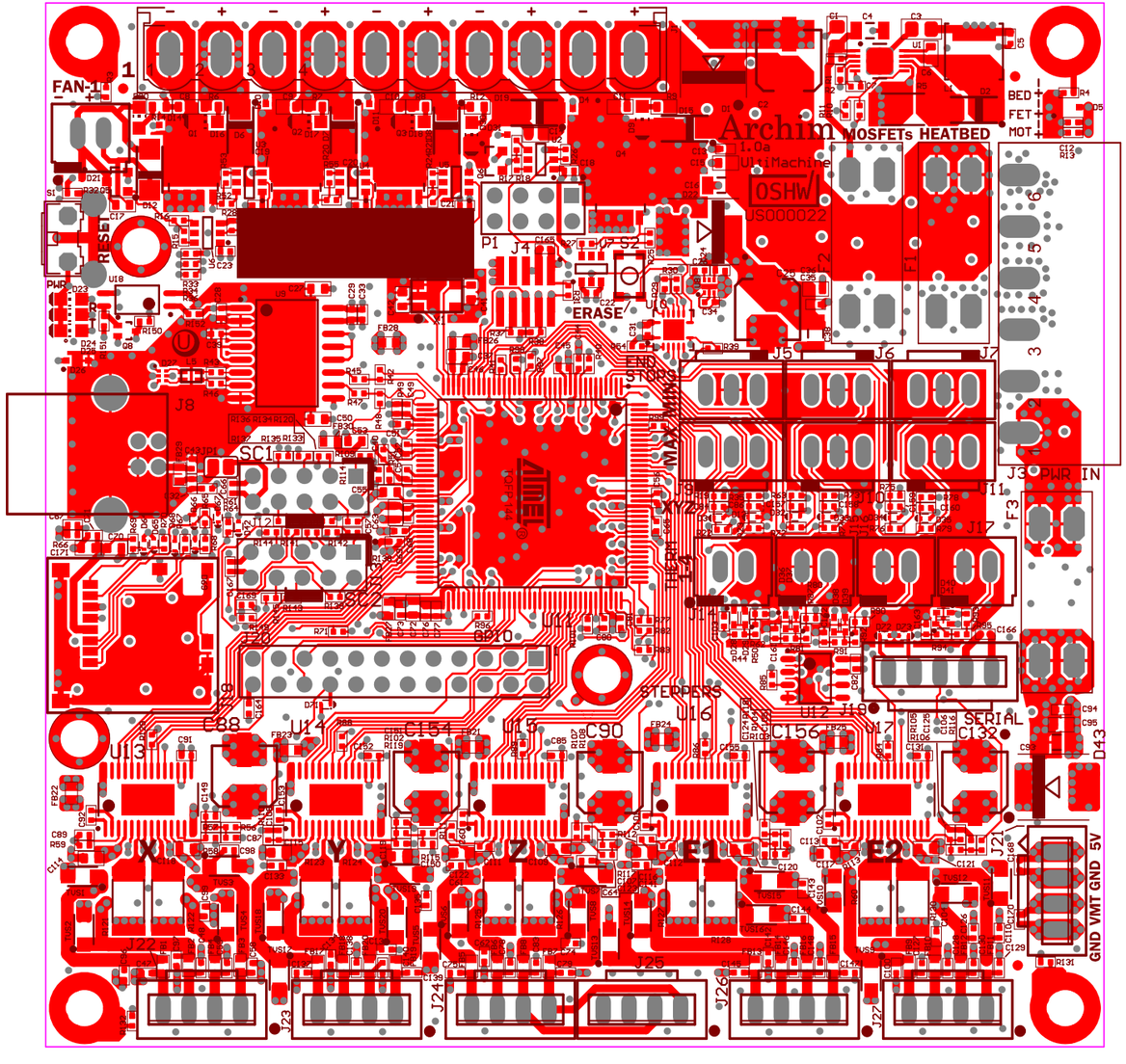
FAN-1
BED
FET
MOT
MOSFETs HEATBED
Archim
1.0a
UltiMachine
OSHW
US000022
ERASE
PWR IN
SERIAL
STEPPERS
GND VMT GND 5V

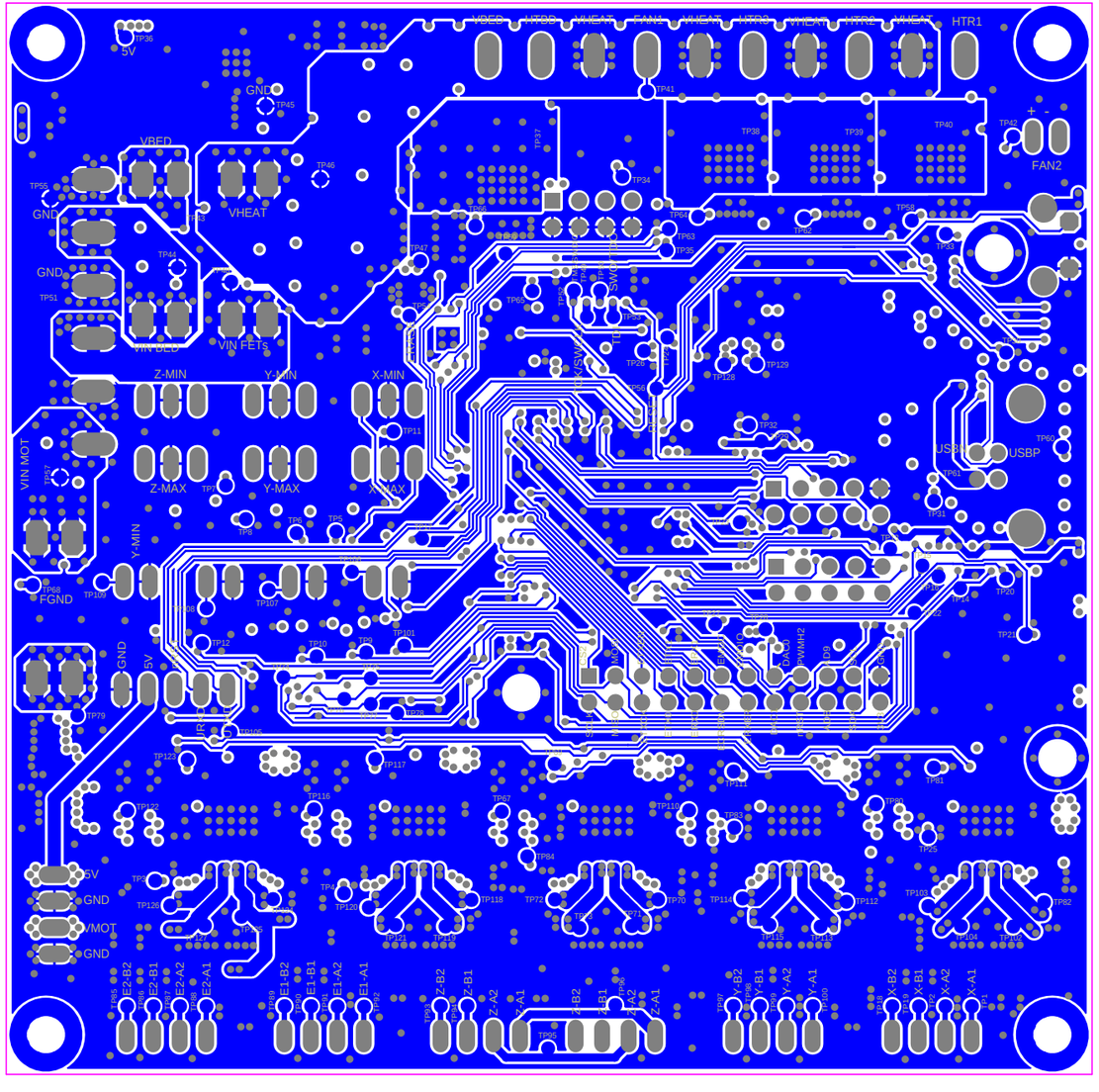
HTR1
FAN2
VBED
VHEAT
GND
VIN BED
VIN FETs
Z-MIN
Y-MIN
X-MIN
Z-MAX
Y-MAX
X-MAX
VIN MOT
FGND
USBP
5V
VMOT

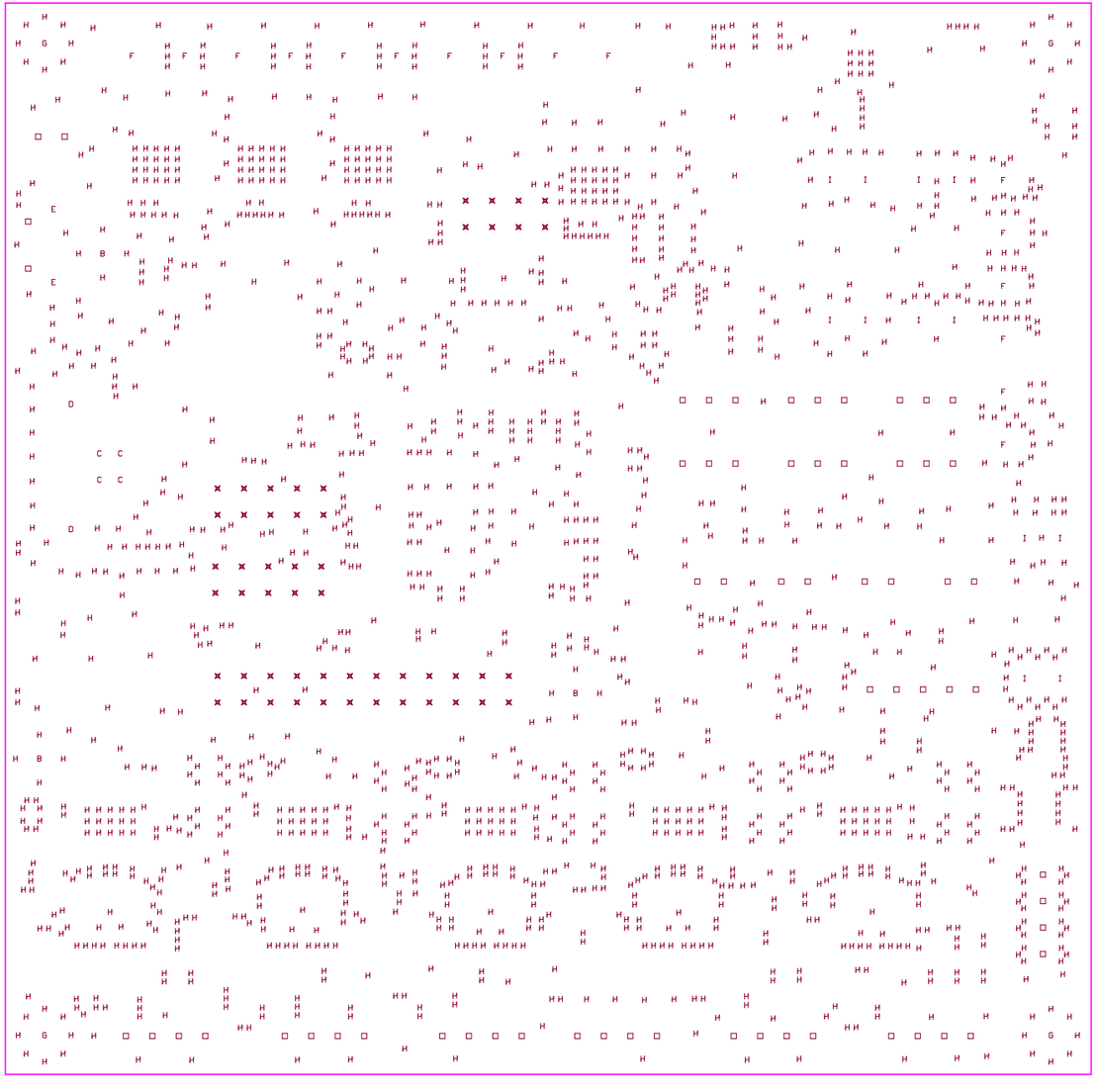

Layer	Name	Material	Thickness	Constant	Board Layer Stack
1	Top Overlay				
2	Top Solder	Solder Resist	0.40mil	3.5	
3	Top Layer	Copper	2.80mil		
4	Dielectric1	FR-4 TG170	5.00mil	4.2	
5	Top GND	Copper	1.42mil		
6	Dielectric3	FR-4 TG170	5.00mil	4.2	
7	Power Plane	Copper	1.40mil		
8	Dielectric 5		30.00mil	4.2	
9	Mid1	Copper	1.42mil		
10	Dielectric 4		5.00mil	4.2	
11	Bot GND	Copper	1.40mil		
12	Dielectric2	FR-4 TG170	5.00mil	4.2	
13	Bottom Layer	Copper	2.80mil		
14	Bottom Solder	Solder Resist	0.40mil	3.5	
15	Bottom Overlay				

Symbol	Count	Hole Size	Plated	Hole Type
E	2	1.499mm (59.00mil)	PTH	Round
D	2	2.210mm (87.00mil)	PTH	Round
B	3	3.300mm (129.92mil)	NPTH	Round
C	4	0.965mm (38.00mil)	PTH	Round
G	4	3.000mm (118.11mil)	NPTH	Round
I	12	1.600mm (63.00mil)	PTH	Round
F	16	1.397mm (55.00mil)	PTH	Round
✖	52	0.900mm (35.43mil)	PTH	Round
□	63	1.016mm (40.00mil)	PTH	Round
H	1653	0.381mm (15.00mil)	PTH	Round
	1811 Total			