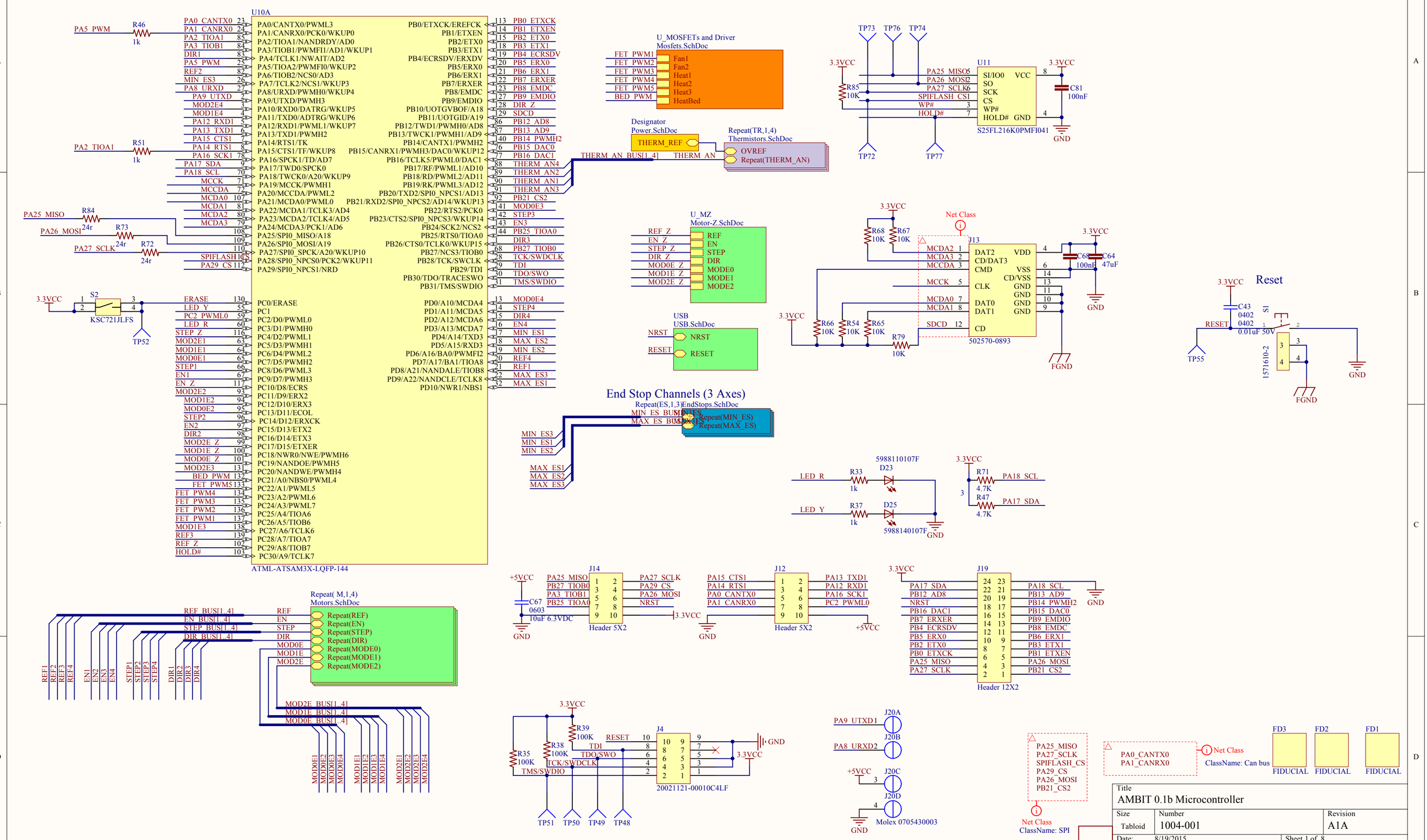

Title
AMBIT 0.1b Microcontroller

Size	Number	Revision
Tabloid	1004-001	A1A

Date: 8/19/2015 | Sheet 1 of 8
File: C:\Users\..\Microcontroller.SchDoc | Drawn By: UltiMachine

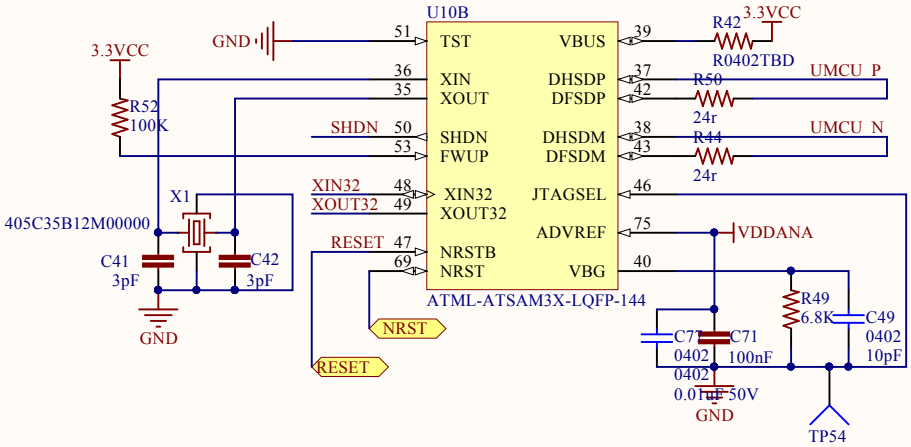

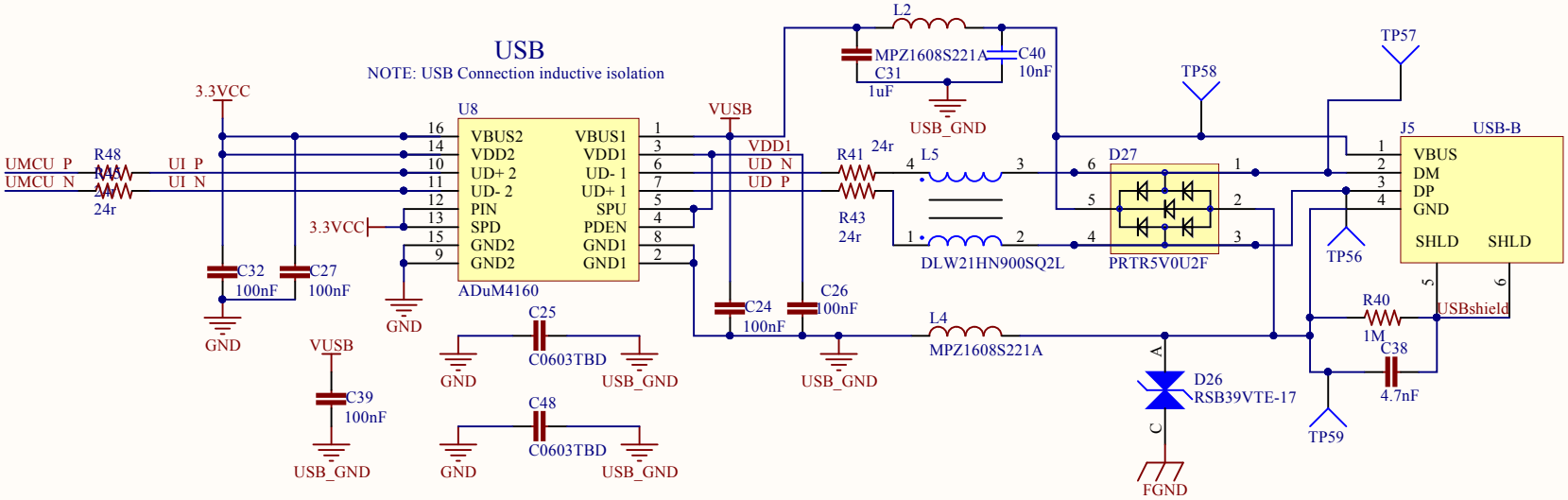

Title		
AMBIT 0.1b USB		
Size: Letter	Number: 1004-001	Revision: A1A
Date: 8/19/2015		Sheet 2 of 8
File: C:\Users\..\USB.SchDoc		Drawn By: UltiMachine

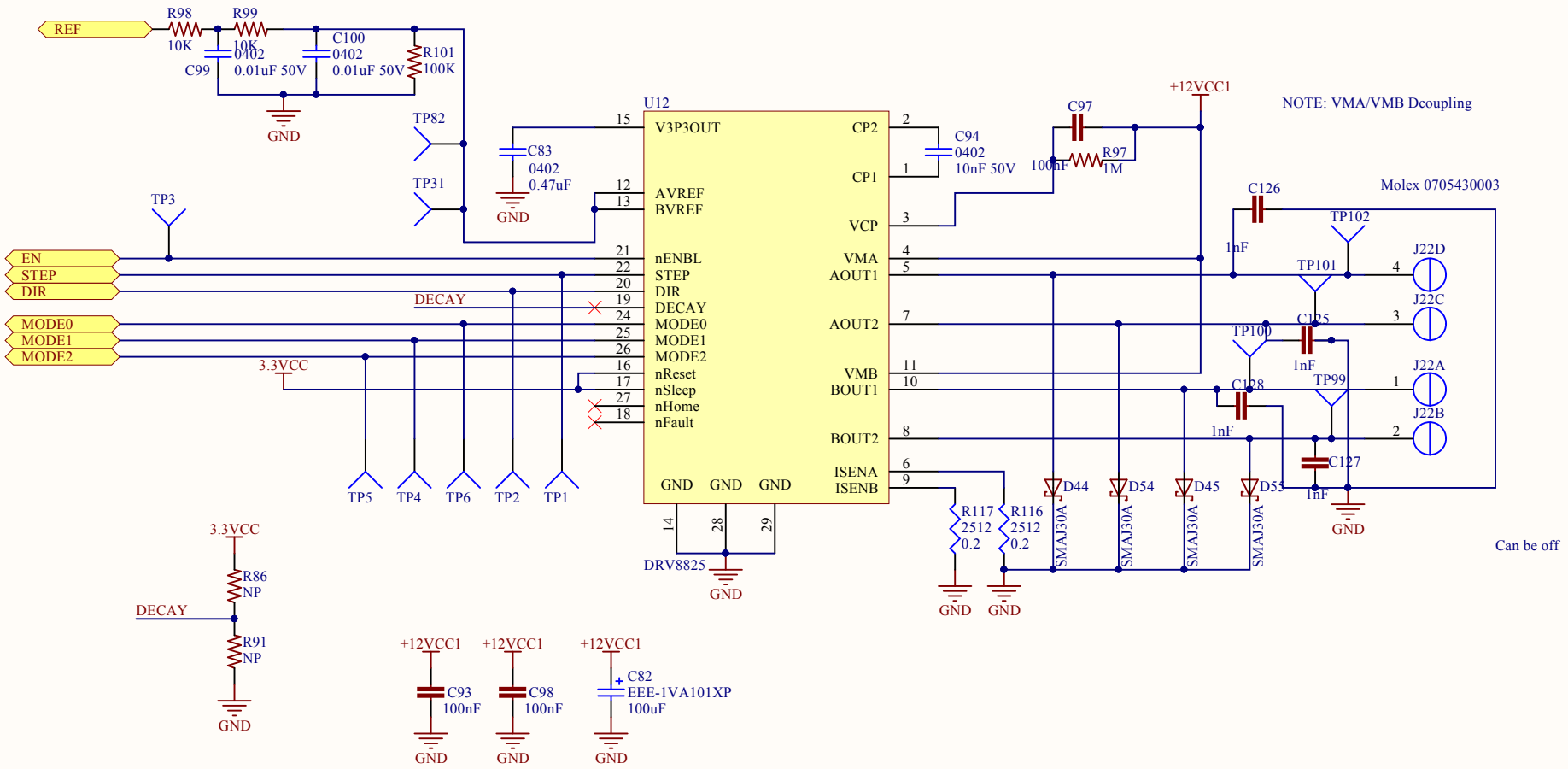

Title		
AMBIT 0.1b Motors		
Size: Letter	Number: 1004-001	Revision: A1A
Date: 8/19/2015		Sheet 3 of 8
File: C:\Users\..\Motors.SchDoc		Drawn By: UltiMachine

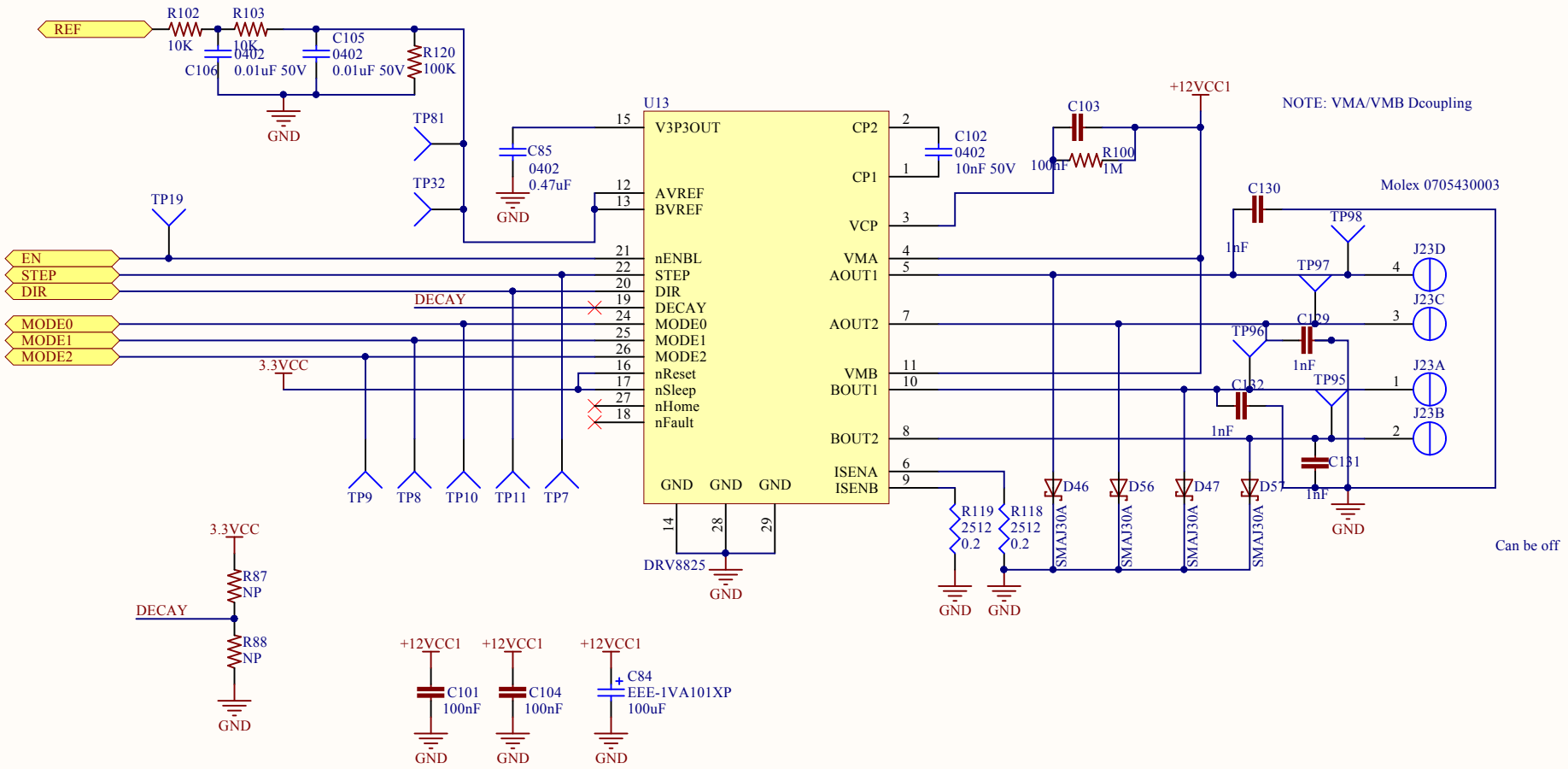

Title		
AMBIT 0.1b Motors		
Size: Letter	Number: 1004-001	Revision: A1A
Date: 8/19/2015		Sheet 3 of 8
File: C:\Users\..\Motors.SchDoc		Drawn By: UltiMachine

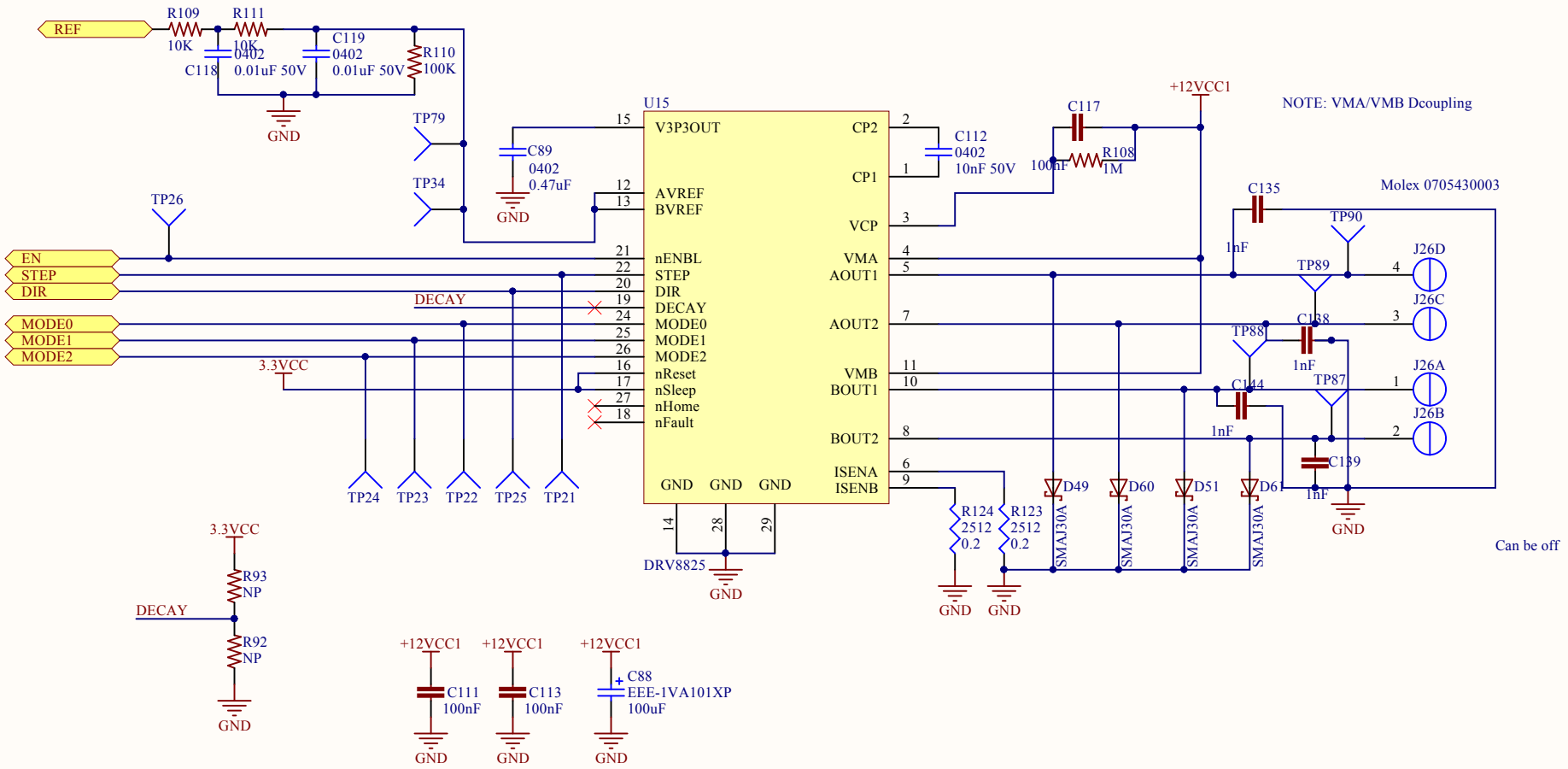

Title		
AMBIT 0.1b Motors		
Size: Letter	Number: 1004-001	Revision: A1A
Date: 8/19/2015		Sheet 3 of 8
File: C:\Users\..\Motors.SchDoc		Drawn By: UltiMachine

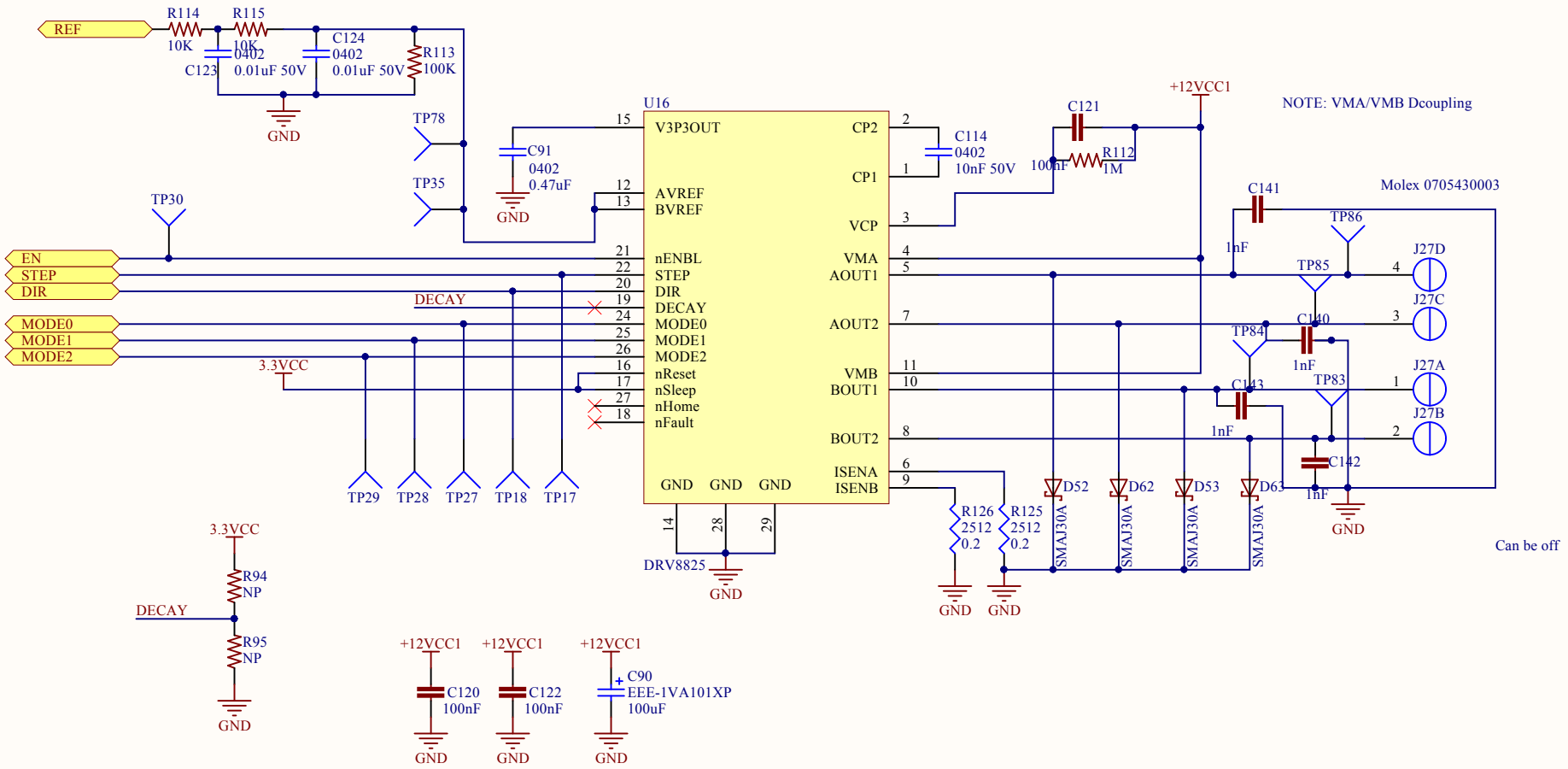

Title		
AMBIT 0.1b Motors		
Size: Letter	Number: 1004-001	Revision: A1A
Date: 8/19/2015		Sheet 3 of 8
File: C:\Users\..\Motors.SchDoc		Drawn By: UltiMachine

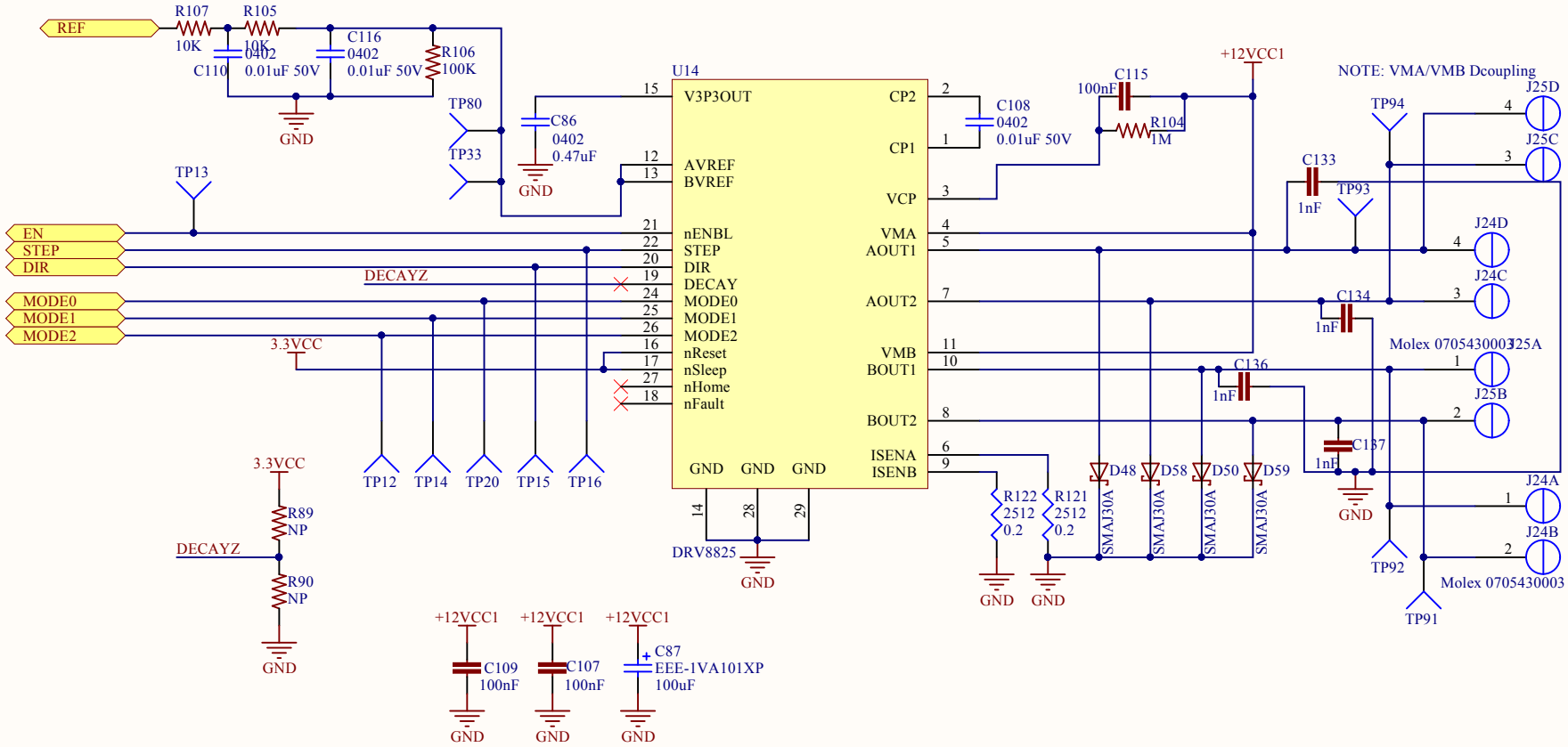

Title	AMBIT 0.1b Motor-Z	
Size: Letter	Number: 1004-001	Revision: A1A
Date: 8/19/2015		Sheet 4 of 8
File: C:\Users\..\Motor-Z.SchDoc		Drawn By: UltiMachine

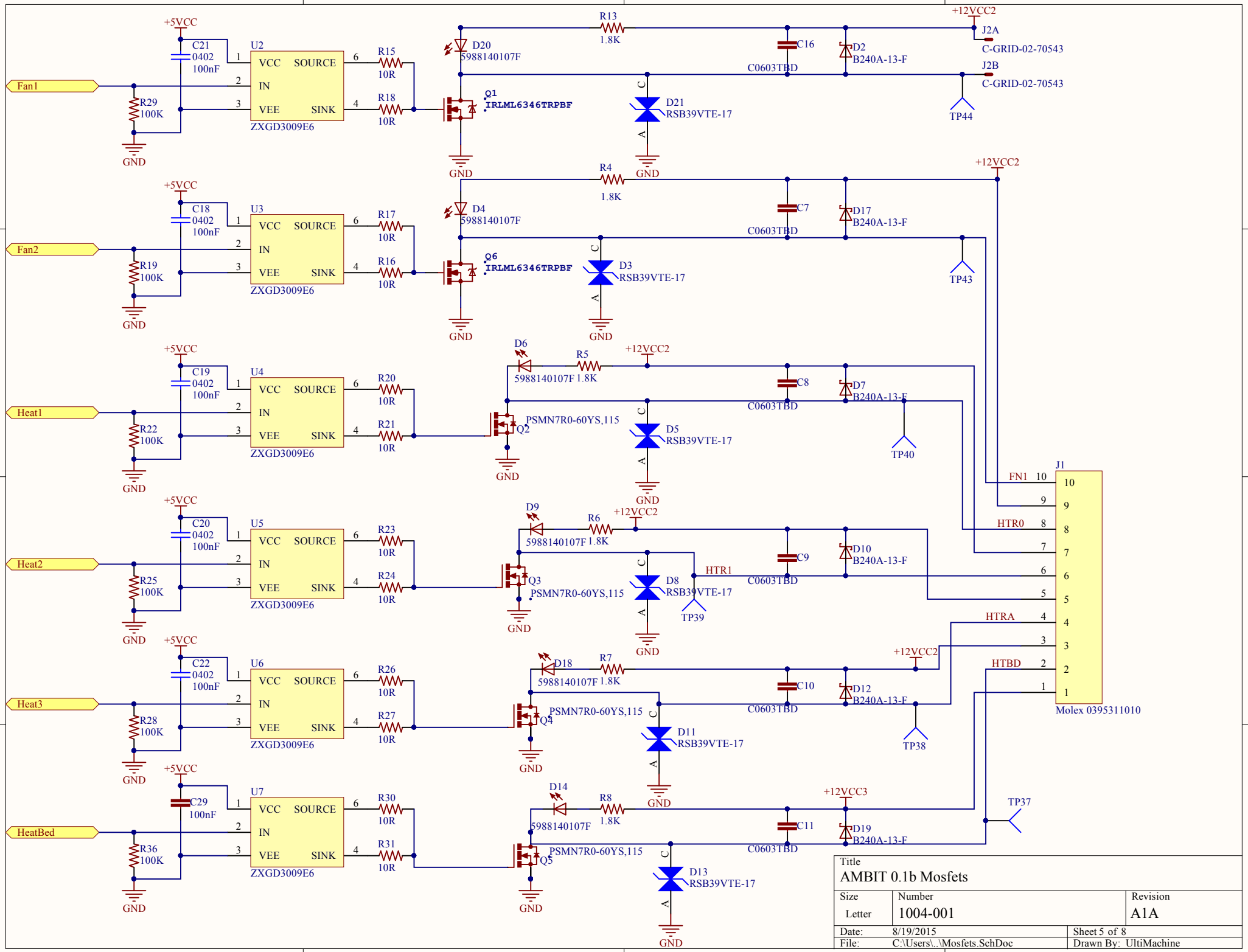

Title	AMBIT 0.1b Mosfets	
Size: Letter	Number: 1004-001	Revision: A1A
Date: 8/19/2015		Sheet 5 of 8
File: C:\Users\..\Mosfets.SchDoc		Drawn By: UltiMachine

Thermistor Channel

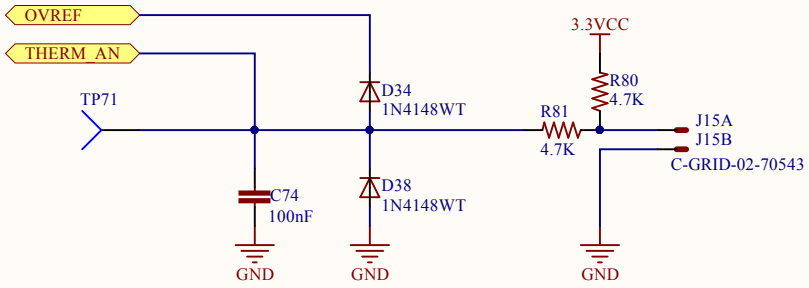

Title	AMBIT 0.1b Thermistors	
Size: Letter	Number: 1004-001	Revision: A1A
Date: 8/19/2015		Sheet 6 of 8
File: C:\Users\..\Thermistors.SchDoc		Drawn By: UltiMachine

Thermistor Channel

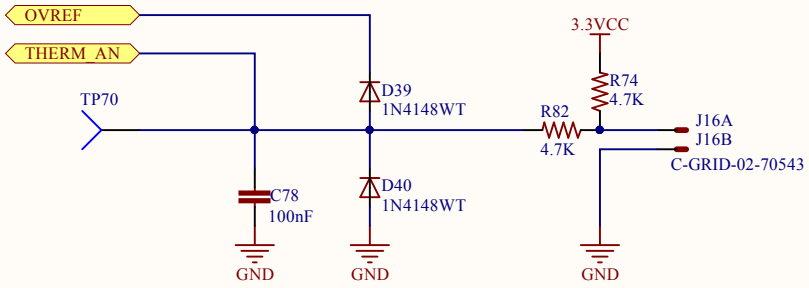

Title	AMBIT 0.1b Thermistors	
Size: Letter	Number: 1004-001	Revision: A1A
Date: 8/19/2015		Sheet 6 of 8
File: C:\Users\..\Thermistors.SchDoc		Drawn By: UltiMachine

Thermistor Channel

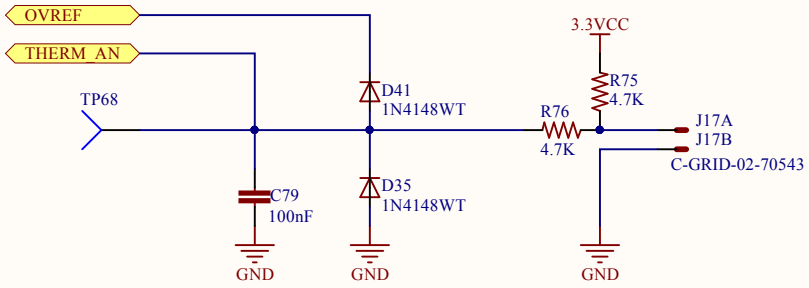

Title	AMBIT 0.1b Thermistors	
Size: Letter	Number: 1004-001	Revision: A1A
Date: 8/19/2015		Sheet 6 of 8
File: C:\Users\..\Thermistors.SchDoc		Drawn By: UltiMachine

Thermistor Channel

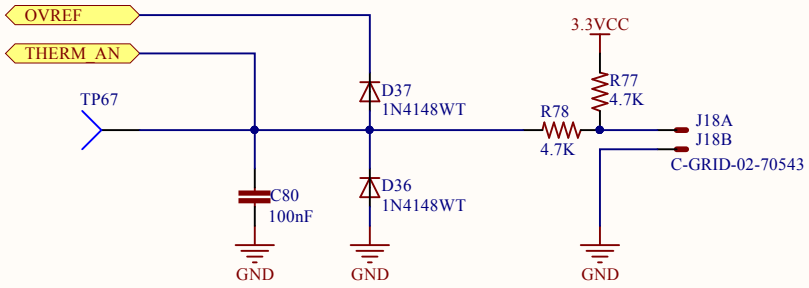

Title	AMBIT 0.1b Thermistors	
Size: Letter	Number: 1004-001	Revision: A1A
Date: 8/19/2015		Sheet 6 of 8
File: C:\Users\..\Thermistors.SchDoc		Drawn By: UltiMachine

End Stop Channel

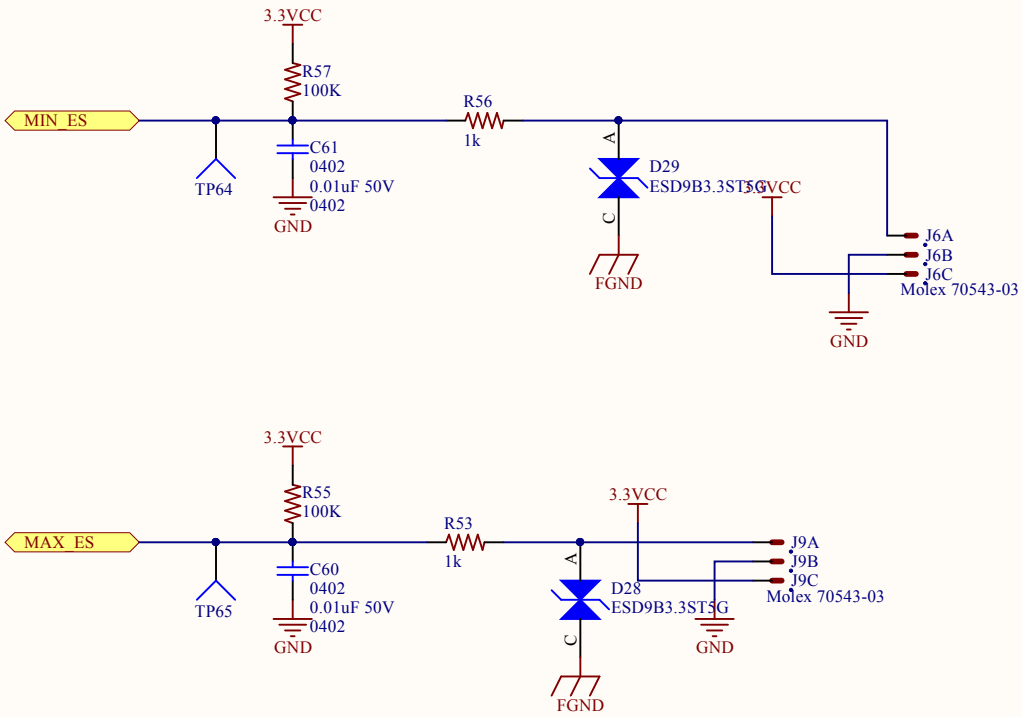

Title	AMBIT 0.1b Endstops	
Size: Letter	Number: 1004-001	Revision: A1A
Date: 8/19/2015		Sheet 7 of 8
File: C:\Users\..\EndStops.SchDoc		Drawn By: UltiMachine

End Stop Channel

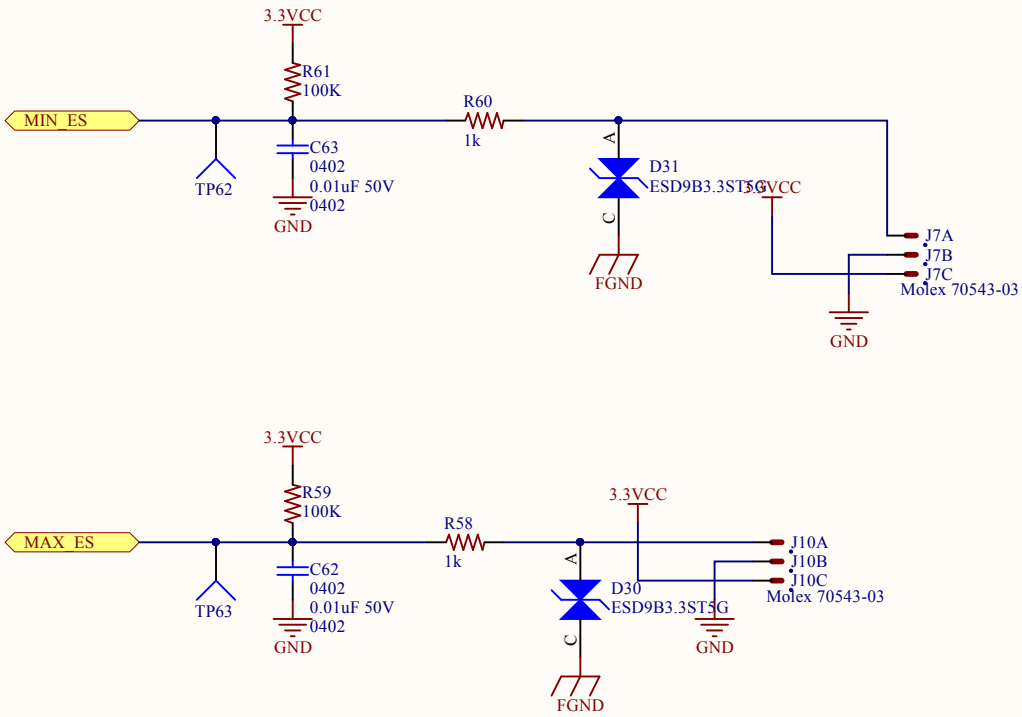

Title	AMBIT 0.1b Endstops	
Size: Letter	Number: 1004-001	Revision: A1A
Date: 8/19/2015		Sheet 7 of 8
File: C:\Users\..\EndStops.SchDoc		Drawn By: UltiMachine

End Stop Channel

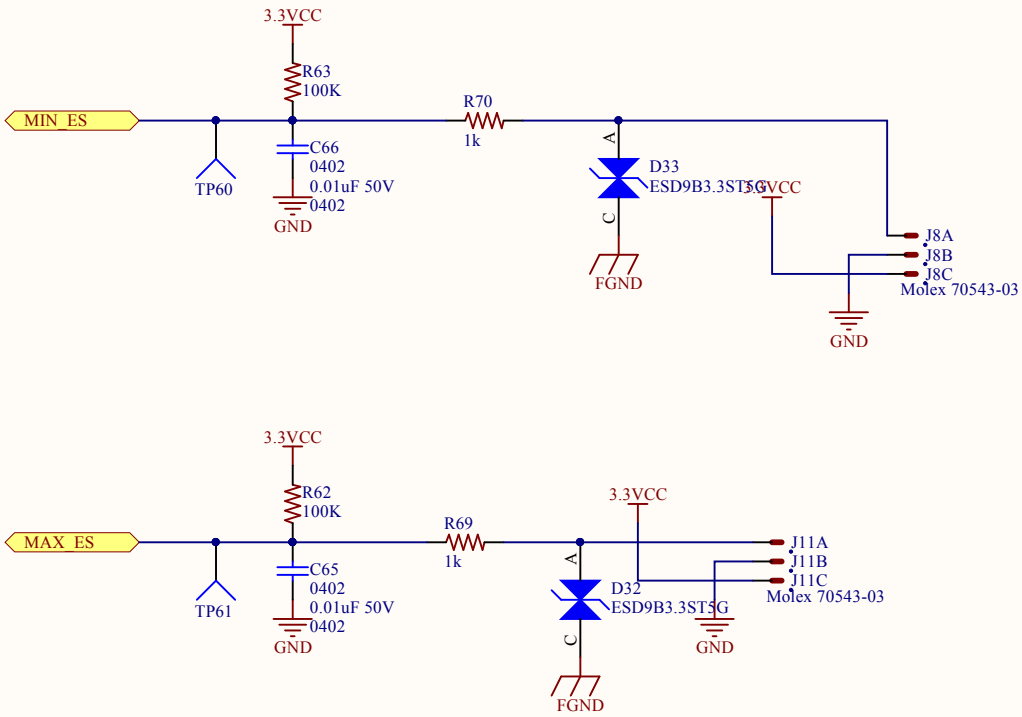

Title	AMBIT 0.1b Endstops	
Size: Letter	Number: 1004-001	Revision: A1A
Date: 8/19/2015		Sheet 7 of 8
File: C:\Users\..\EndStops.SchDoc		Drawn By: UltiMachine

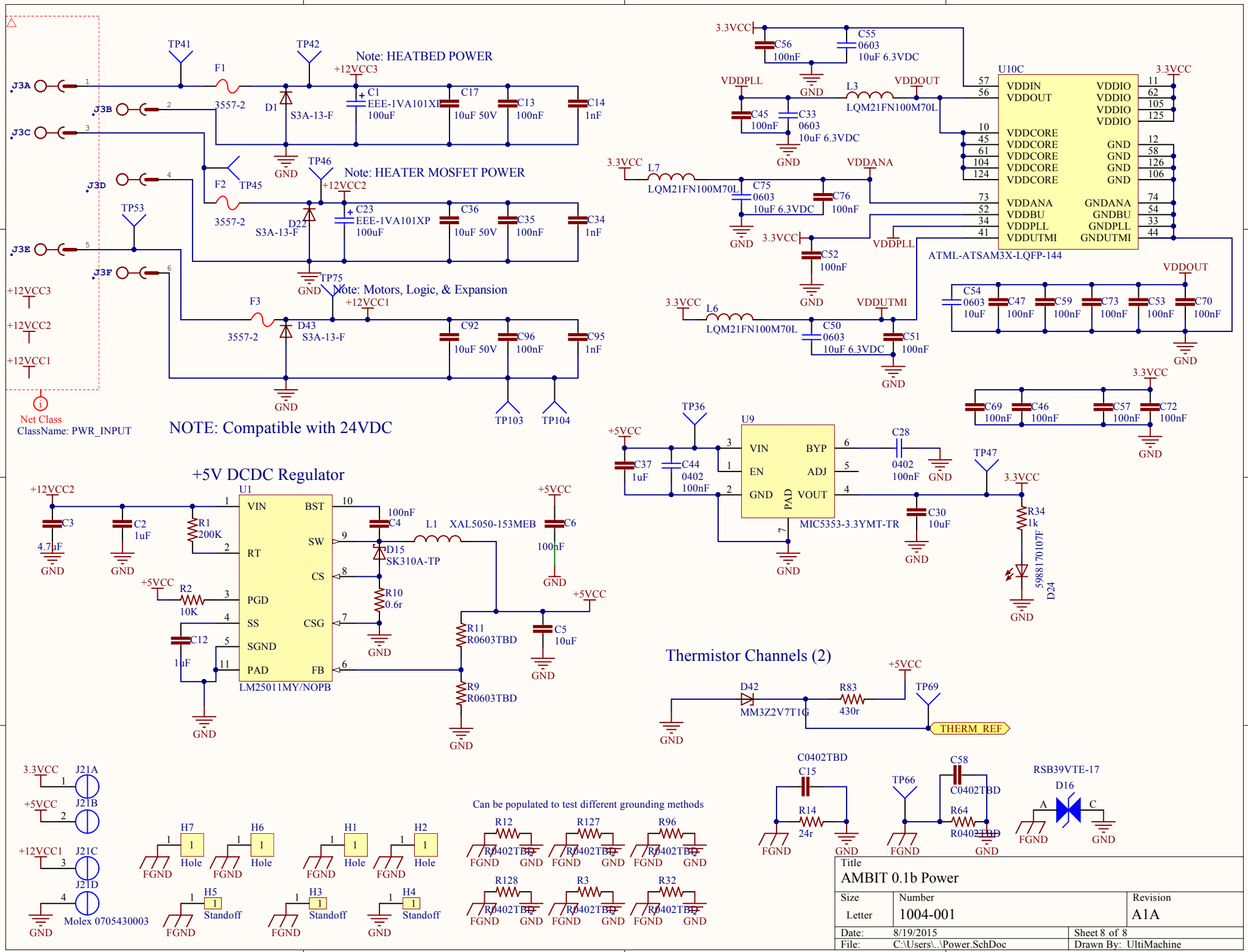
Note: HEATBED POWER
Note: HEATER MOSFET POWER
Note: Motors, Logic, & Expansion
NOTE: Compatible with 24VDC
Net Class
ClassName: PWR_INPUT
+5V DCDC Regulator
LM25011MY/NOPB
XAL5050-153MEB
MIC5353-3.3YMT-TR
ATML-ATSAM3X-LQFP-144
Thermistor Channels (2)
THERM_REF
Can be populated to test different grounding methods
Molex 0705430003
AMBIT 0.1b Power
Size
Letter
Number
1004-001
Revision
A1A
Date: 8/19/2015
Sheet 8 of 8
File: C:\Users\..\Power.SchDoc
Drawn By: UltiMachine

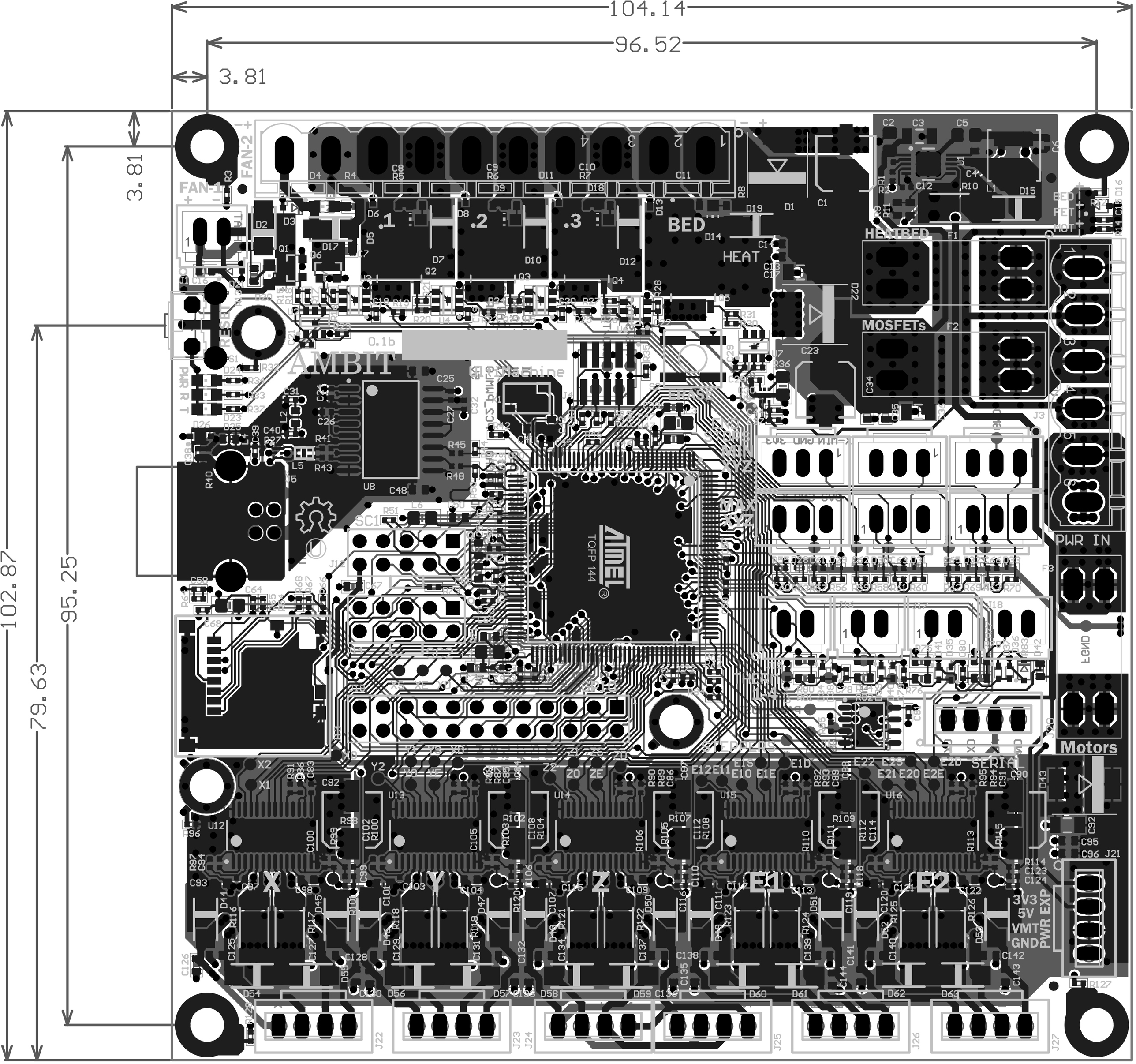
104.14
96.52
3.81
3.81
102.87
95.25
79.63
FAN-1
FAN-2
BED
HEAT
HEATBED
MOSFETs
PWR IN
Motors
SERIAL
STEPPERS
X
Y
Z
E1
E2
3V3
5V
VMT
GND
PWR EXP
TQFP 144

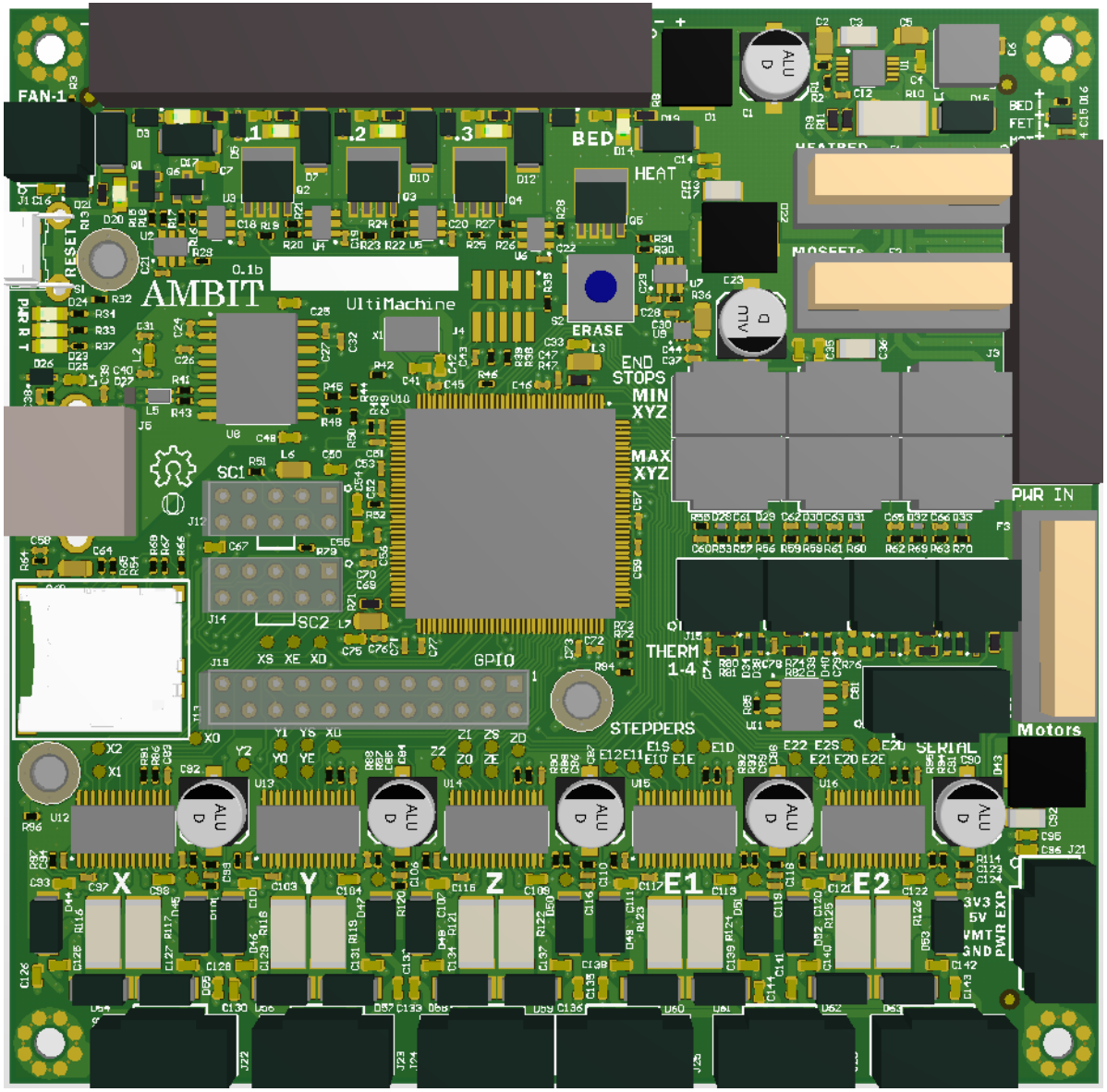
FAN-1
RESET
PWR
AMBIT
0.1b
UltiMachine
.1
.2
.3
BED
HEAT
ERASE
END
STOPS
MIN
XYZ
MAX
XYZ
SC1
SC2
XS XE XD
GPIO
THERM
1-4
STEPPERS
SERIAL
PWR IN
Motors
X
Y
Z
E1
E2
3V3
5V
VMT
GND
PWR EXP