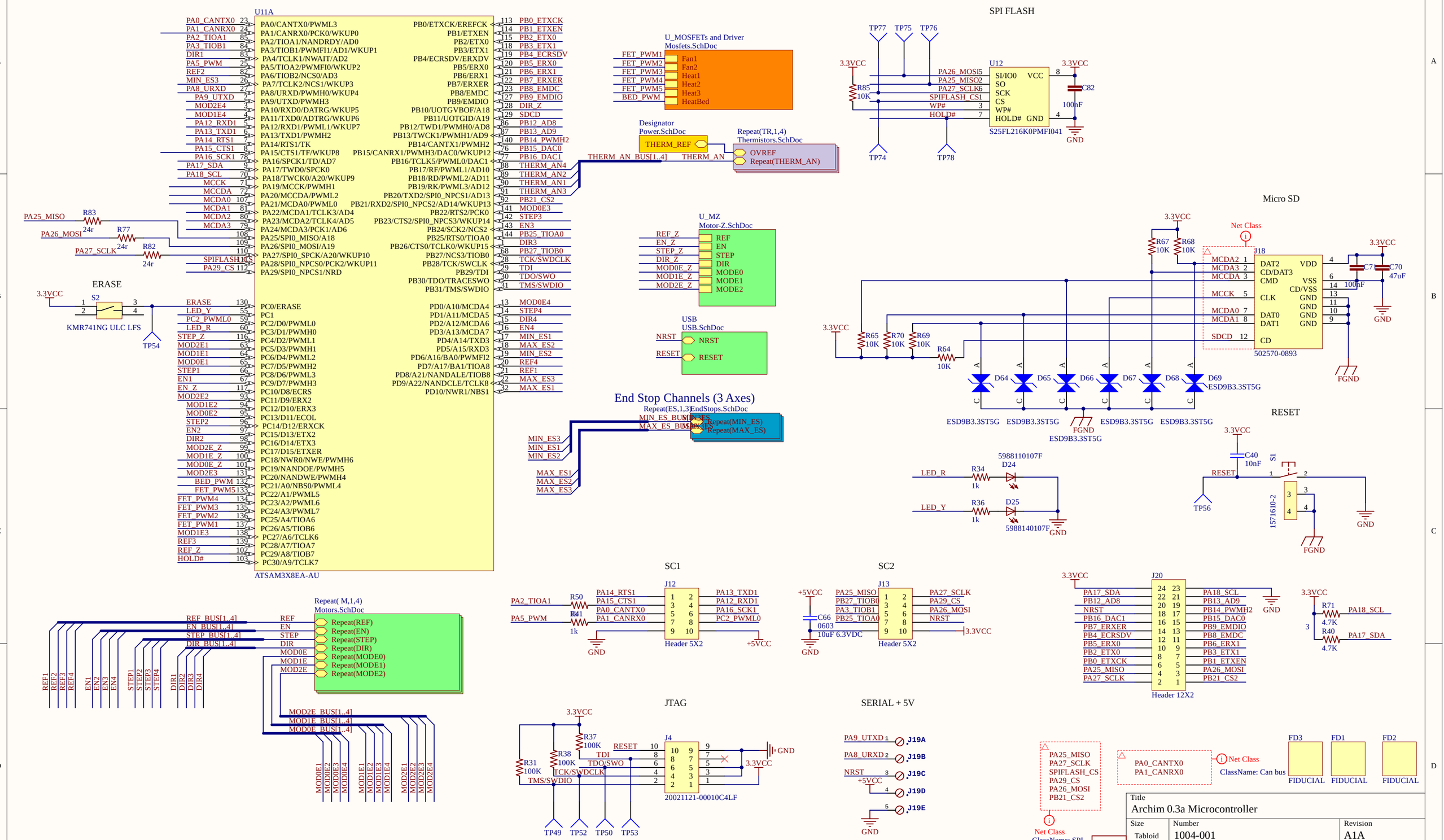
U11A
ATSAM3X8EA-AU
SPI FLASH
U12
S25FL216K0PMFI041
U_MOSFETs and Driver
Mosfets.SchDoc
Fan1
Fan2
Heat1
Heat2
Heat3
HeatBed
Designator
Power.SchDoc
THERM_REF
Repeat(TR,1,4)
Thermistors.SchDoc
OVREF
Repeat(THERM_AN)
THERM_AN_BUS[1..4]
THERM_AN
U_MZ
Motor-Z.SchDoc
REF
EN
STEP
DIR
MODE0
MODE1
MODE2
USB
USB.SchDoc
NRST
RESET
ERASE
S2
KMR741NG ULC LFS
TP54
Micro SD
J18
502570-0893
Net Class
FGND
GND
End Stop Channels (3 Axes)
Repeat(ES,1,3)
EndStops.SchDoc
Repeat(MIN_ES)
Repeat(MAX_ES)
RESET
S1
1571610-2
TP56
LED_R
LED_Y
D24
D25
5988110107F
5988140107F
Repeat(M,1,4)
Motors.SchDoc
Repeat(REF)
Repeat(EN)
Repeat(STEP)
Repeat(DIR)
Repeat(MODE0)
Repeat(MODE1)
Repeat(MODE2)
SC1
J12
Header 5X2
SC2
J13
Header 5X2
J20
Header 12X2
JTAG
J4
20021121-00010C4LF
TP49
TP52
TP50
TP53
SERIAL + 5V
J19A
J19B
J19C
J19D
J19E
Net Class
ClassName: SPI
Net Class
ClassName: Can bus
FIDUCIAL
Title
Archim 0.3a Microcontroller
Size
Tabloid
Number
1004-001
Revision
A1A
Date: 8/28/2016
Sheet 1 of 8
File: C:\Users\..\Microcontroller.SchDoc
Drawn By: UltiMachine

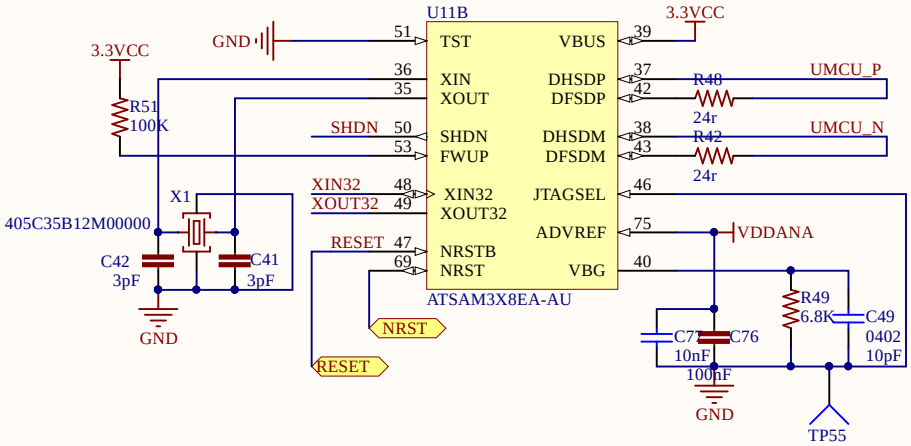

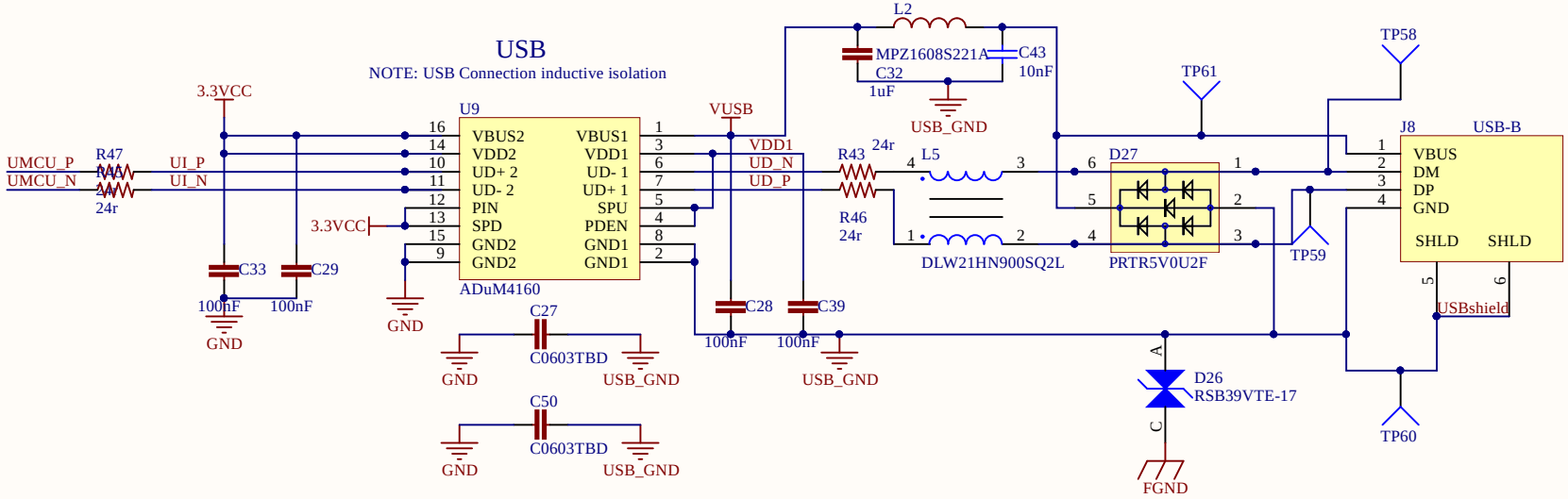

Title		
Archim 0.3a USB		
Size: Letter	Number: 1004-001	Revision: A1A
Date: 8/28/2016		Sheet 2 of 8
File: C:\Users\..\USB.SchDoc		Drawn By: UltiMachine

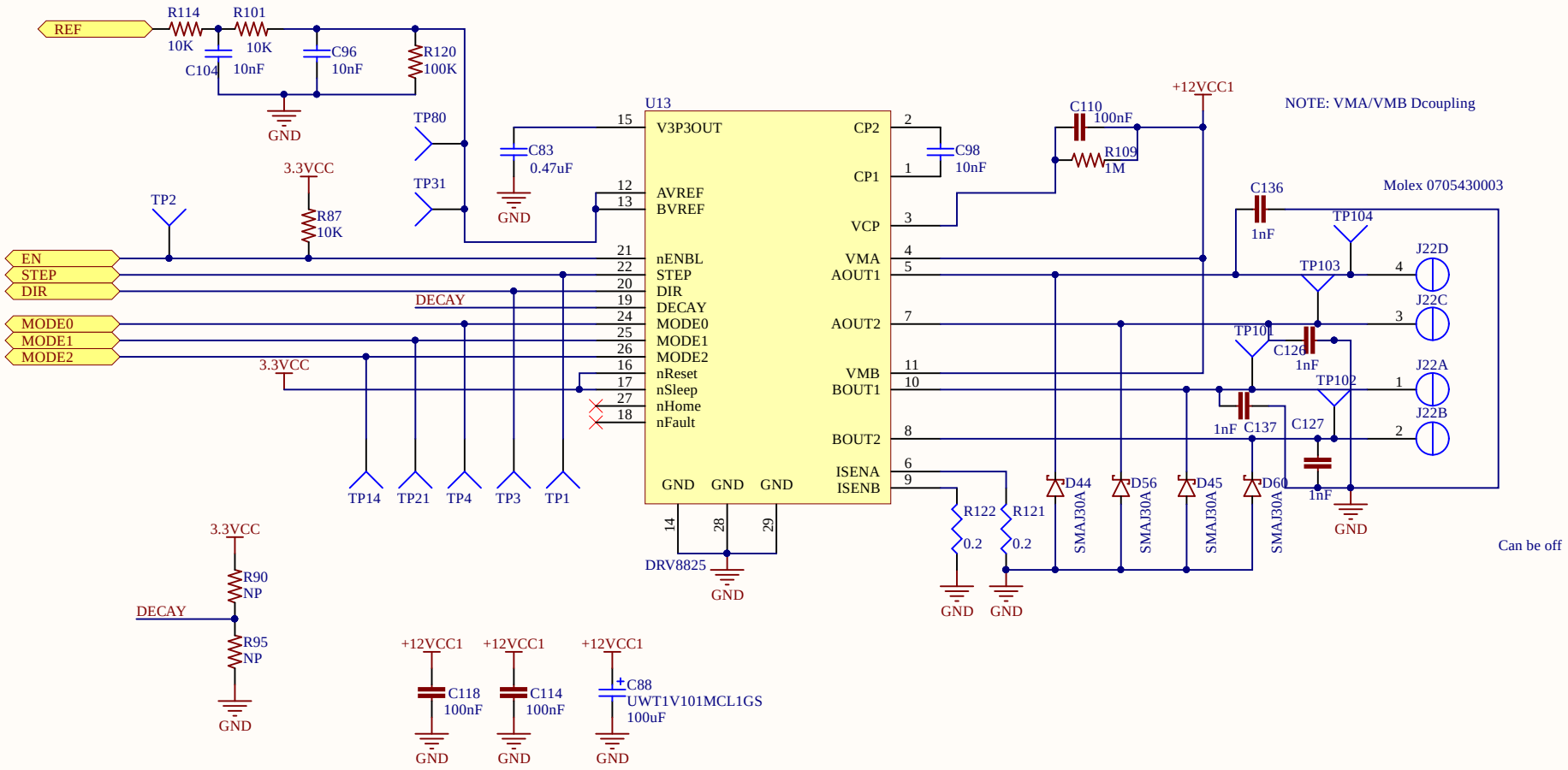

Title	Archim 0.3a Motors	
Size: Letter	Number: 1004-001	Revision: A1A
Date: 8/28/2016		Sheet 3 of 8
File: C:\Users\..\Motors.SchDoc		Drawn By: UltiMachine

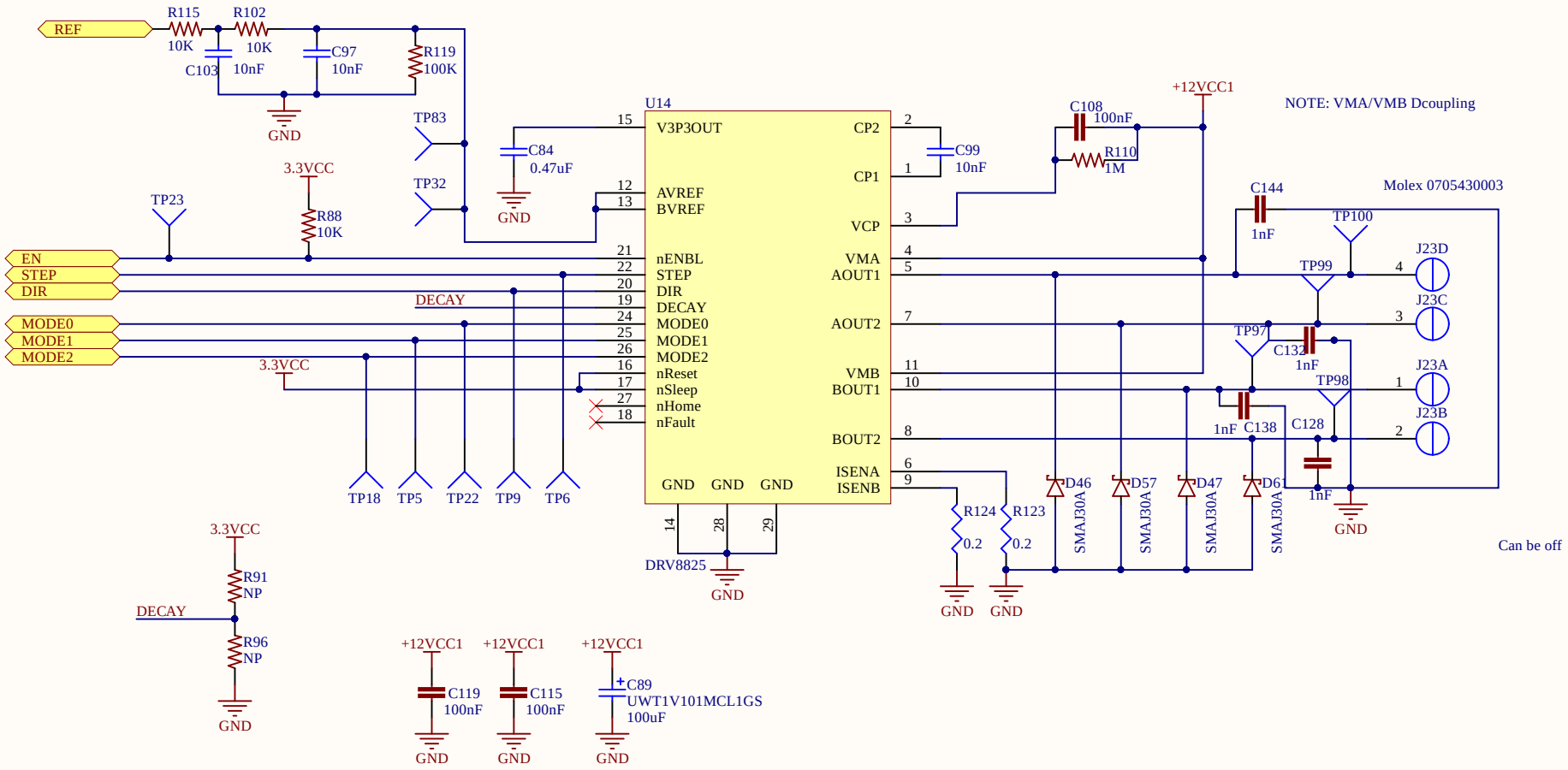

Title	Archim 0.3a Motors	
Size: Letter	Number: 1004-001	Revision: A1A
Date: 8/28/2016		Sheet 3 of 8
File: C:\Users\..\Motors.SchDoc		Drawn By: UltiMachine

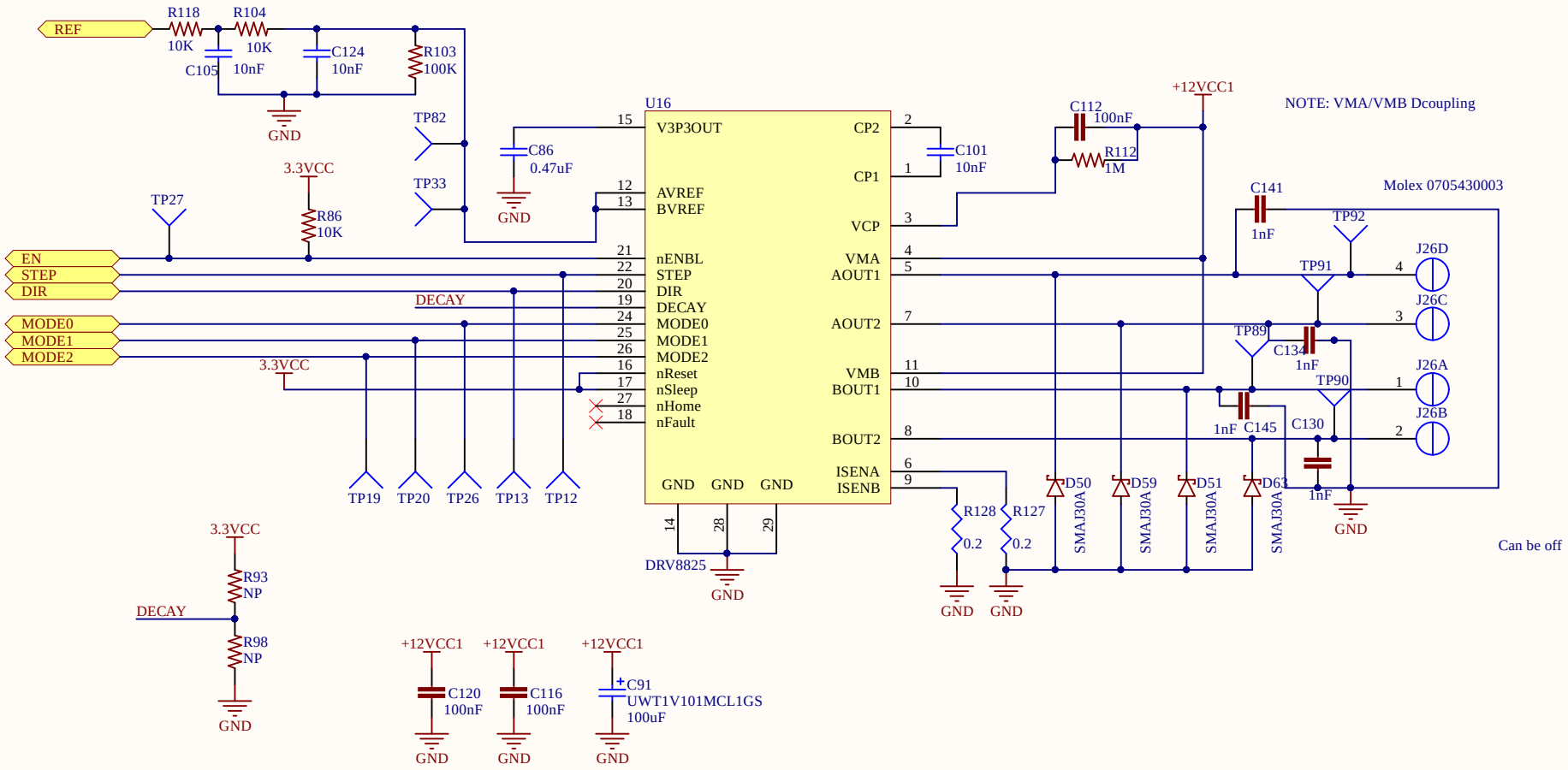

Title	Archim 0.3a Motors	
Size: Letter	Number: 1004-001	Revision: A1A
Date: 8/28/2016		Sheet 3 of 8
File: C:\Users\..\Motors.SchDoc		Drawn By: UltiMachine

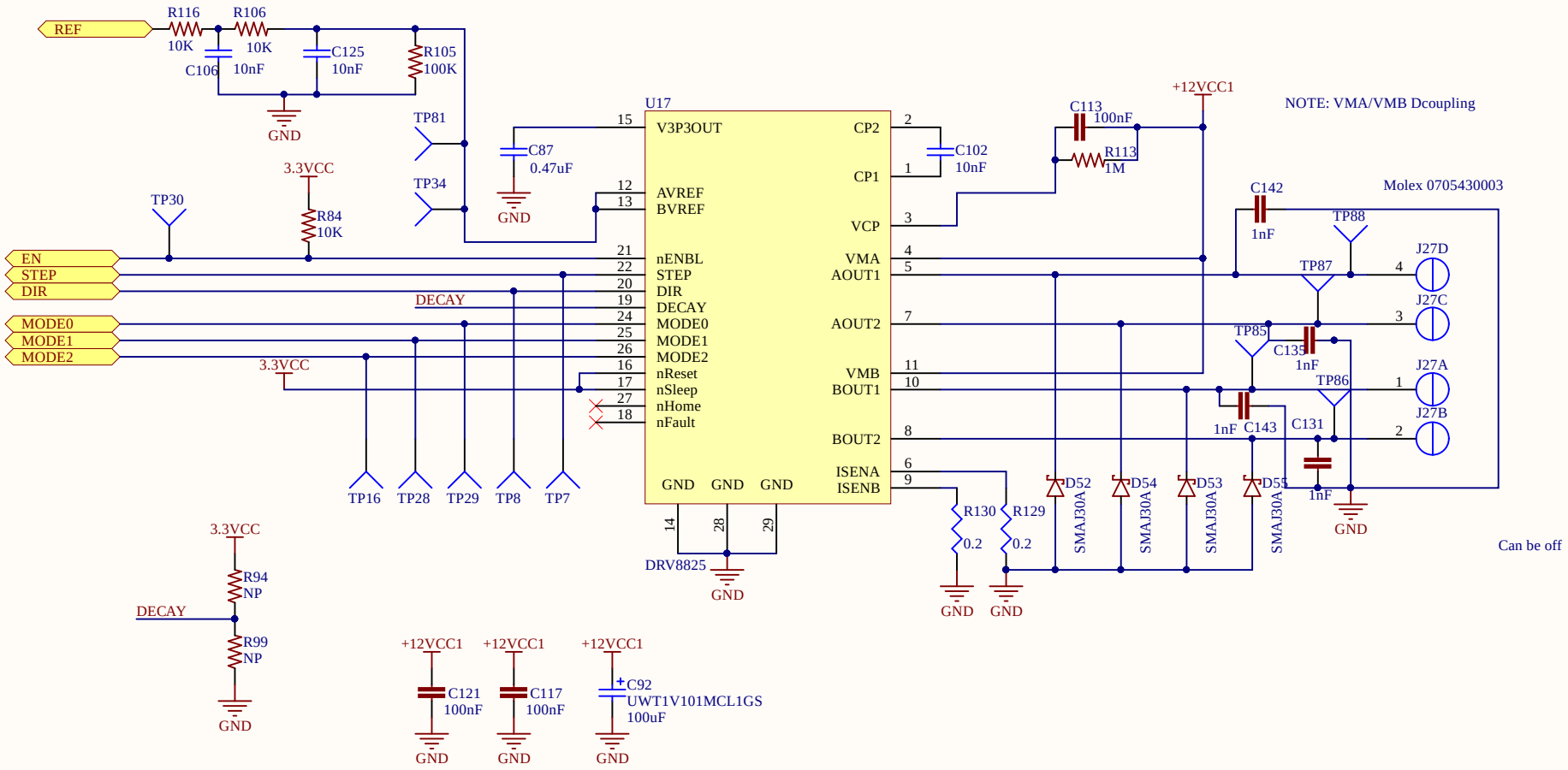

Title	Archim 0.3a Motors	
Size: Letter	Number: 1004-001	Revision: A1A
Date: 8/28/2016		Sheet 3 of 8
File: C:\Users\..\Motors.SchDoc		Drawn By: UltiMachine

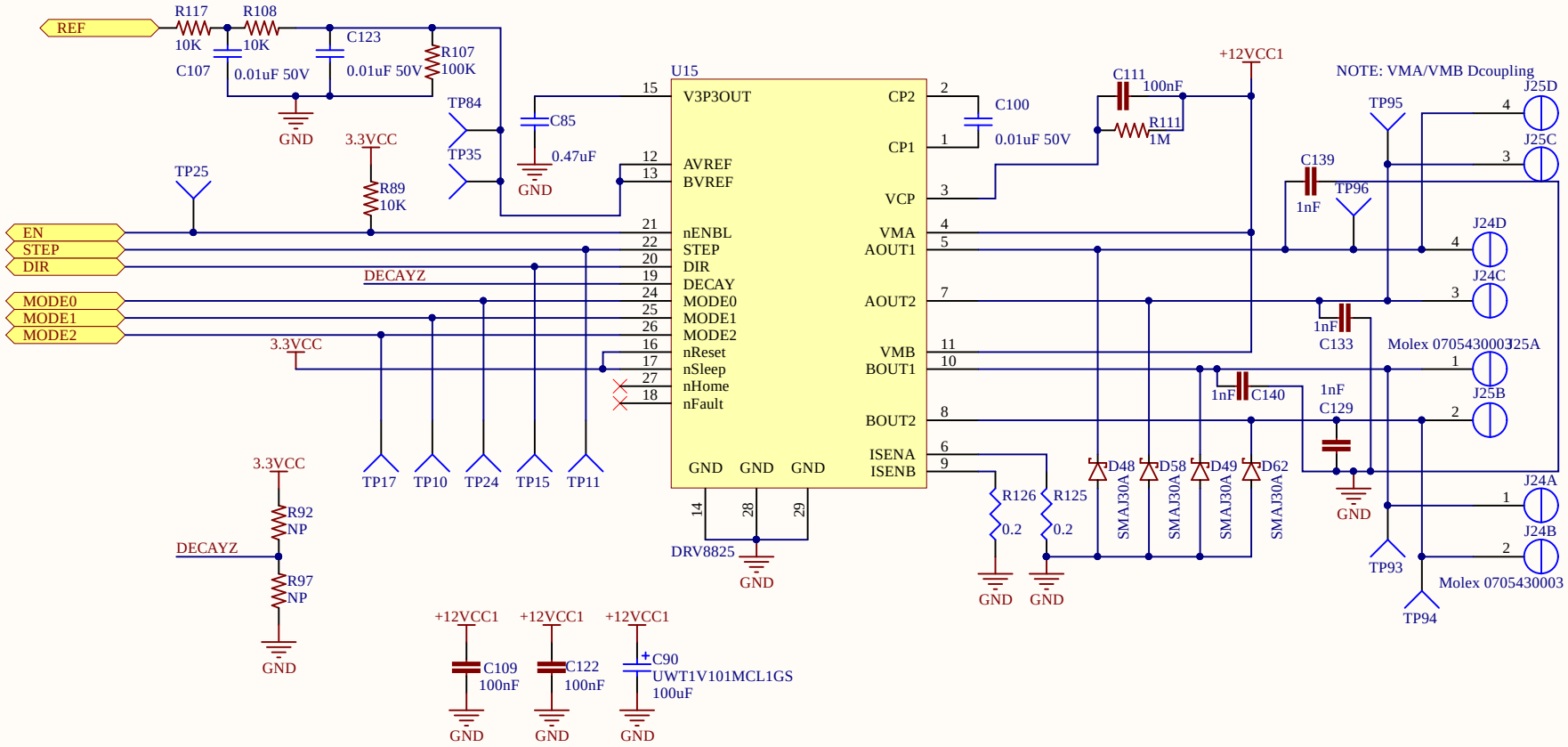

Title	Archim 0.3a Motor-Z	
Size: Letter	Number: 1004-001	Revision: A1A
Date: 8/28/2016		Sheet 4 of 8
File: C:\Users\..\Motor-Z.SchDoc		Drawn By: UltiMachine

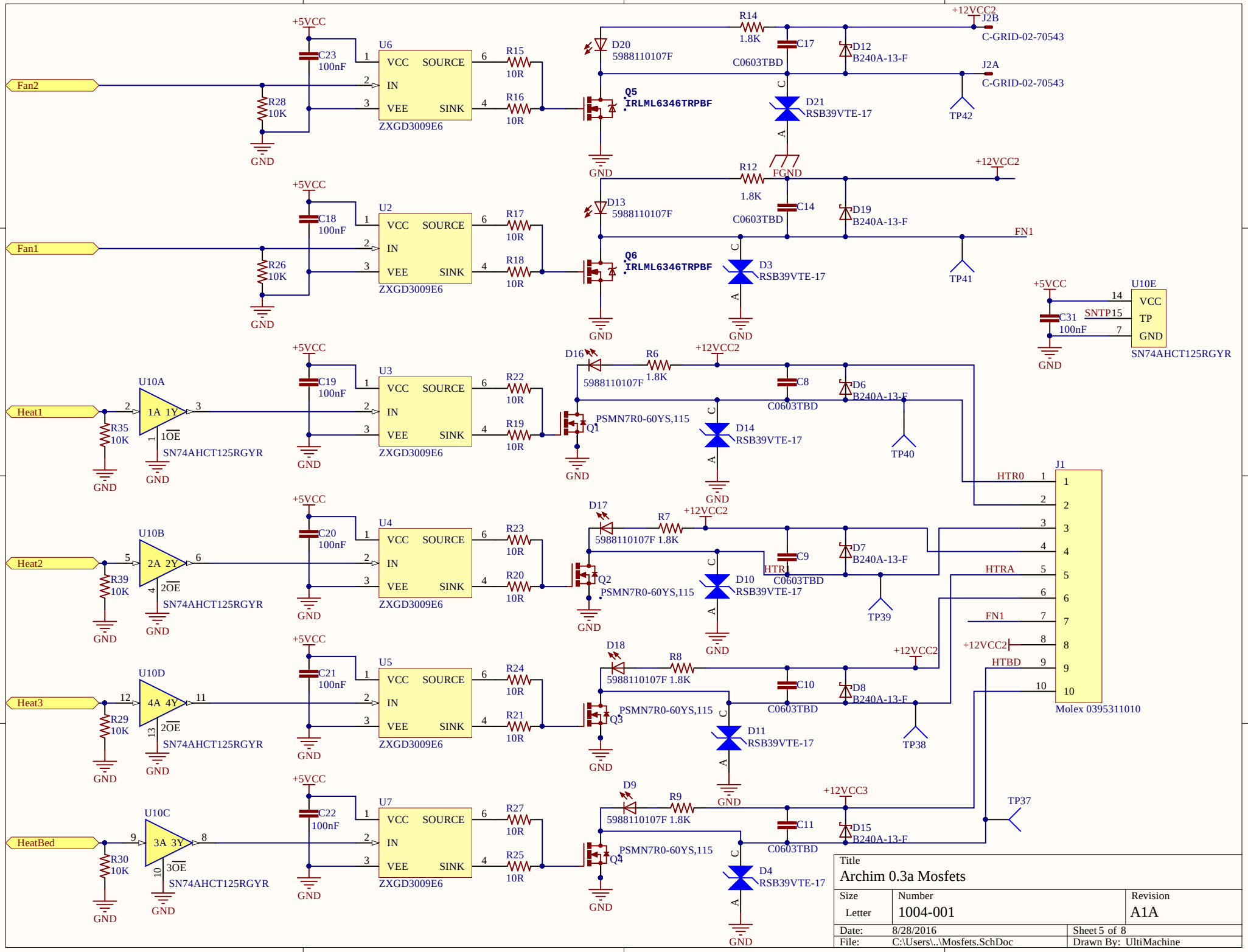
Fan2
Fan1
Heat1
Heat2
Heat3
HeatBed
+5VCC
+12VCC2
+12VCC3
U6
U2
U3
U4
U5
U7
VCC
SOURCE
IN
VEE
SINK
ZXGD3009E6
R15 10R
R16 10R
R17 10R
R18 10R
R22 10R
R19 10R
R23 10R
R20 10R
R24 10R
R21 10R
R27 10R
R25 10R
R14 1.8K
R12 1.8K
R6 1.8K
R7 1.8K
R8 1.8K
R9 1.8K
C23 100nF
C18 100nF
C19 100nF
C20 100nF
C21 100nF
C22 100nF
C17 C0603TBD
C14 C0603TBD
C8 C0603TBD
C9 C0603TBD
C10 C0603TBD
C11 C0603TBD
D20 5988110107F
D13 5988110107F
D16 5988110107F
D17 5988110107F
D18 5988110107F
D9 5988110107F
D12 B240A-13-F
D19 B240A-13-F
D6 B240A-13-F
D7 B240A-13-F
D8 B240A-13-F
D15 B240A-13-F
D21 RSB39VTE-17
D3 RSB39VTE-17
D14 RSB39VTE-17
D10 RSB39VTE-17
D11 RSB39VTE-17
D4 RSB39VTE-17
Q5 IRLML6346TRPBF
Q6 IRLML6346TRPBF
Q1 PSMN7R0-60YS,115
Q2 PSMN7R0-60YS,115
Q3 PSMN7R0-60YS,115
Q4 PSMN7R0-60YS,115
FGND
HTR
J2B C-GRID-02-70543
J2A C-GRID-02-70543
TP42
TP41
TP40
TP39
TP38
TP37
FN1
U10E
VCC
TP
GND
SNTP
C31 100nF
SN74AHCT125RGYR
U10A
U10B
U10C
U10D
1A 1Y
2A 2Y
3A 3Y
4A 4Y
1OE
2OE
3OE
R35 10K
R39 10K
R30 10K
R29 10K
R28 10K
R26 10K
J1
Molex 0395311010
HTR0
HTRA
HTBD
Title
Archim 0.3a Mosfets
Size
Letter
Number
1004-001
Revision
A1A
Date: 8/28/2016
Sheet 5 of 8
File: C:\Users\..\Mosfets.SchDoc
Drawn By: UltiMachine

Thermistor Channel

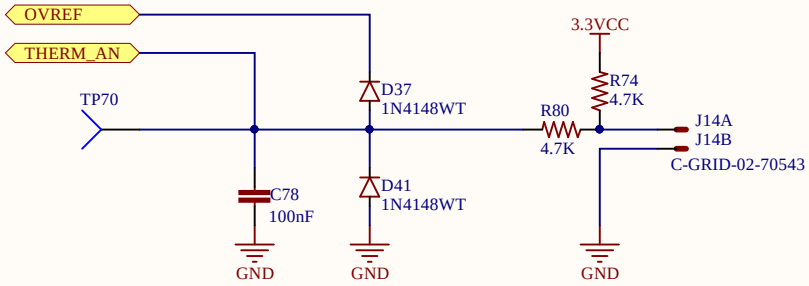

Title	Archim 0.3a Thermistors	
Size: Letter	Number: 1004-001	Revision: A1A
Date: 8/28/2016		Sheet 6 of 8
File: C:\Users\..\Thermistors.SchDoc		Drawn By: UltiMachine

Thermistor Channel

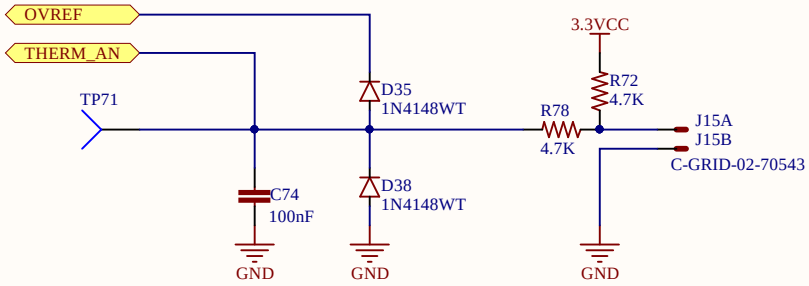

Title	Archim 0.3a Thermistors	
Size: Letter	Number: 1004-001	Revision: A1A
Date: 8/28/2016		Sheet 6 of 8
File: C:\Users\..\Thermistors.SchDoc		Drawn By: UltiMachine

Thermistor Channel

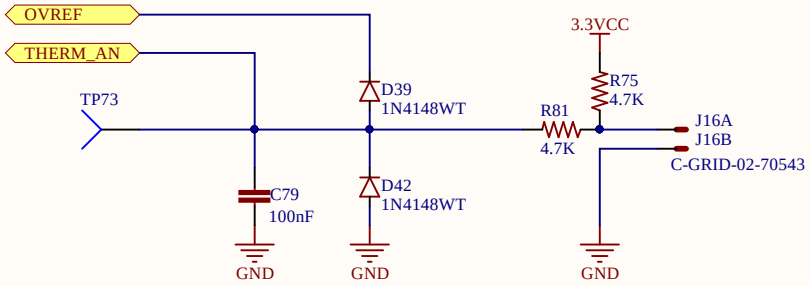

Title	Archim 0.3a Thermistors	
Size: Letter	Number: 1004-001	Revision: A1A
Date: 8/28/2016		Sheet 6 of 8
File: C:\Users\..\Thermistors.SchDoc		Drawn By: UltiMachine

Thermistor Channel

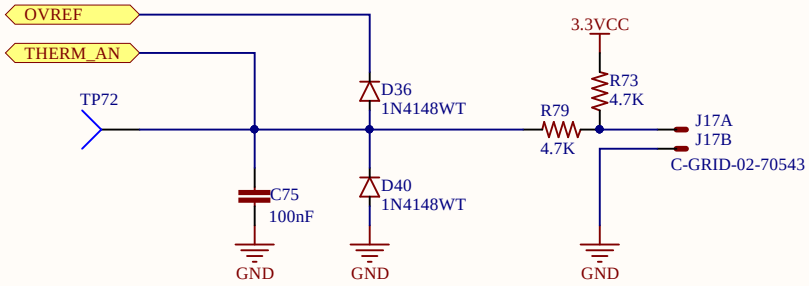

Title	Archim 0.3a Thermistors	
Size: Letter	Number: 1004-001	Revision: A1A
Date: 8/28/2016		Sheet 6 of 8
File: C:\Users\..\Thermistors.SchDoc		Drawn By: UltiMachine

End Stop Channel

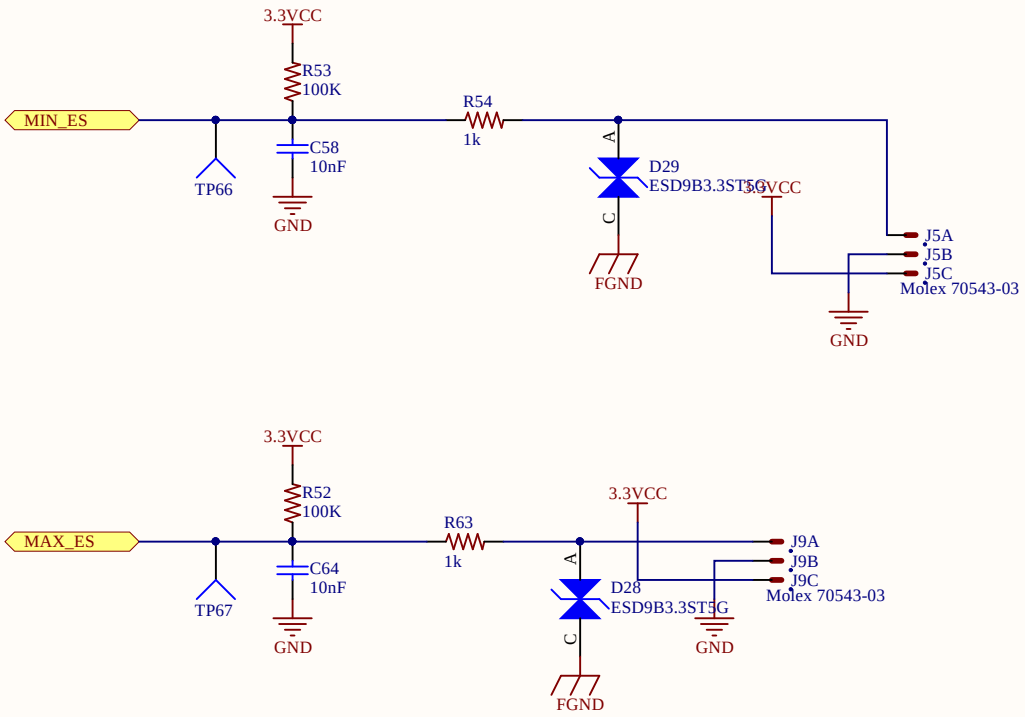

Title	Archim 0.3a Endstops	
Size: Letter	Number: 1004-001	Revision: A1A
Date: 8/28/2016		Sheet 7 of 8
File: C:\Users\..\EndStops.SchDoc		Drawn By: UltiMachine

End Stop Channel

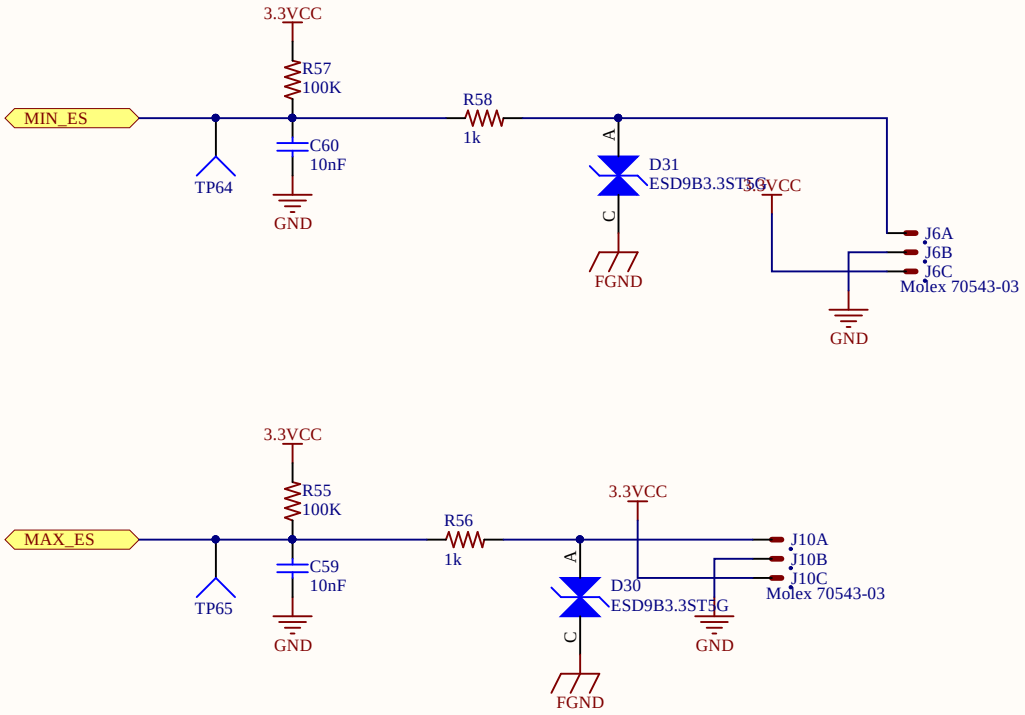

Title	Archim 0.3a Endstops	
Size: Letter	Number: 1004-001	Revision: A1A
Date: 8/28/2016		Sheet 7 of 8
File: C:\Users\..\EndStops.SchDoc		Drawn By: UltiMachine

End Stop Channel

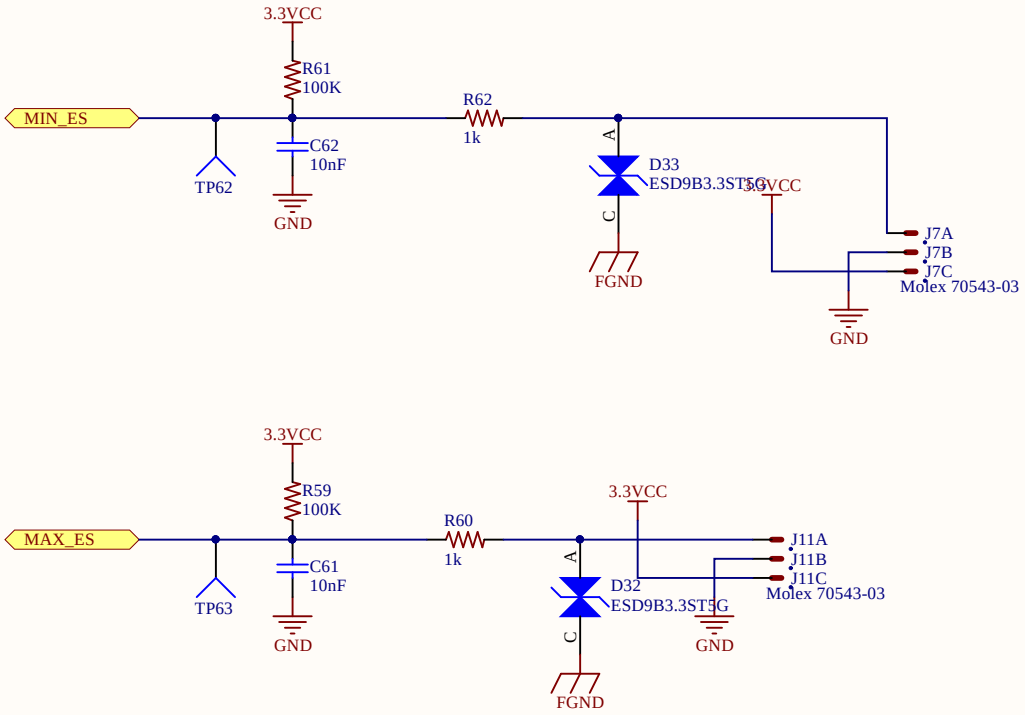

Title	Archim 0.3a Endstops	
Size: Letter	Number: 1004-001	Revision: A1A
Date: 8/28/2016		Sheet 7 of 8
File: C:\Users\..\EndStops.SchDoc		Drawn By: UltiMachine

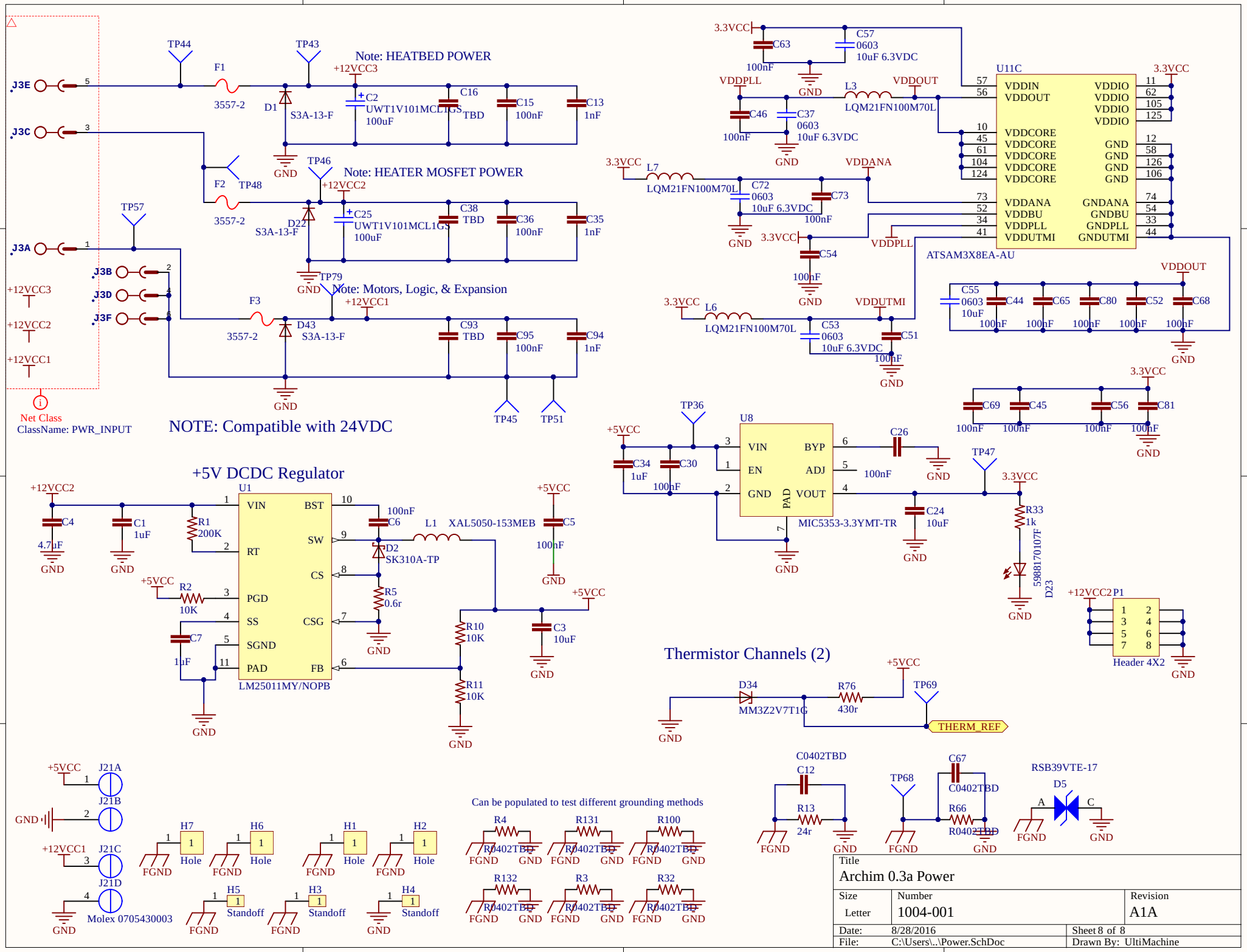
Note: HEATBED POWER
Note: HEATER MOSFET POWER
Note: Motors, Logic, & Expansion
NOTE: Compatible with 24VDC
Net Class
ClassName: PWR_INPUT
+5V DCDC Regulator
LM25011MY/NOPB
XAL5050-153MEB
Thermistor Channels (2)
THERM_REF
ATSAM3X8EA-AU
MIC5353-3.3YMT-TR
Header 4X2
Molex 0705430003
Can be populated to test different grounding methods
Title
Archim 0.3a Power
Size
Letter
Number
1004-001
Revision
A1A
Date: 8/28/2016
Sheet 8 of 8
File: C:\Users\..\Power.SchDoc
Drawn By: UltiMachine

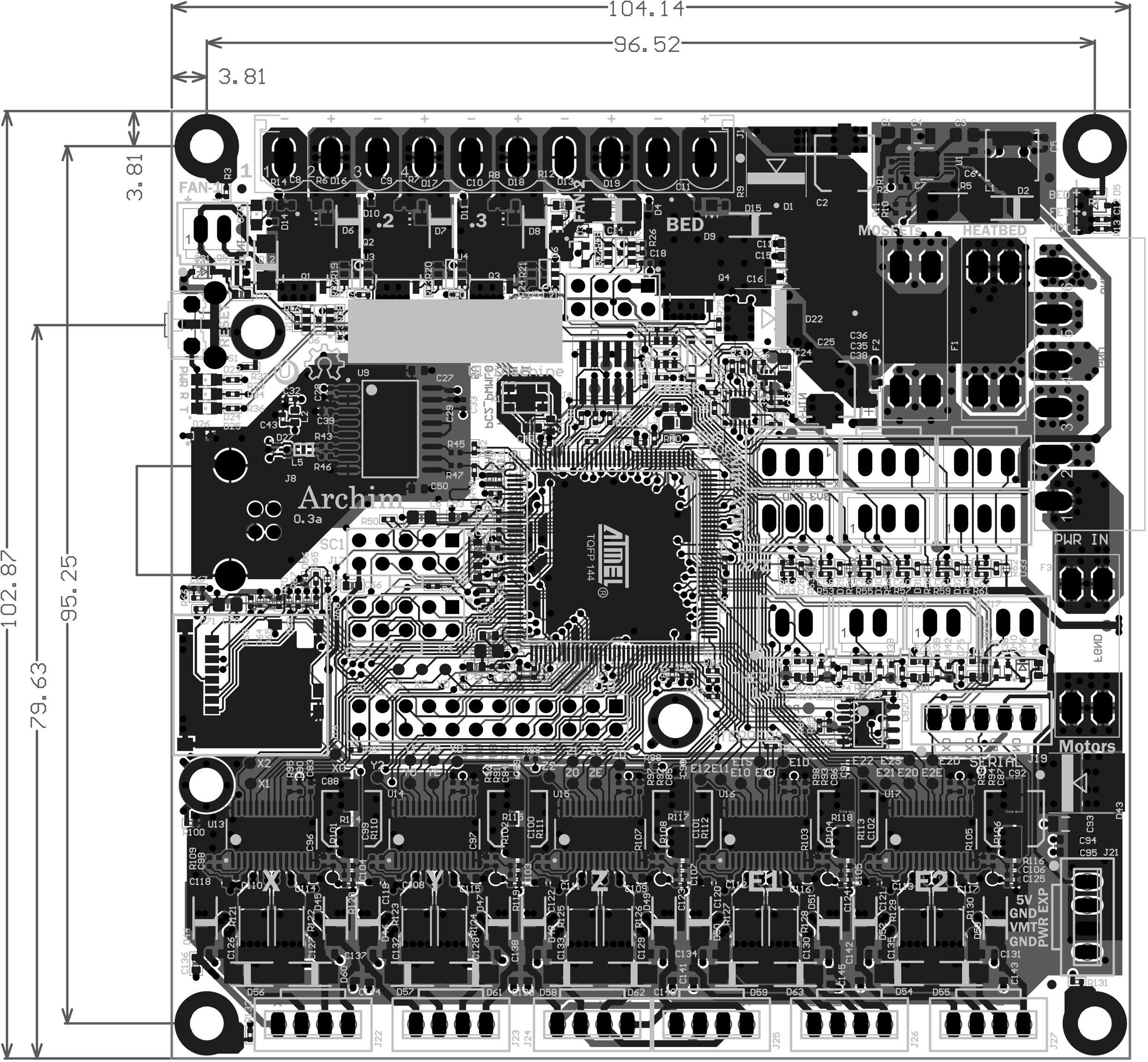
104.14
96.52
3.81
3.81
102.87
95.25
79.63
FAN-1
FAN-2
BED
MOSFETs
HEATBED
PWR IN
Motors
Archim
0.3a
SC1
TQFP 144
X
Y
Z
E1
E2
SERIAL
5V
GND
VMT
GND
PWR EXP

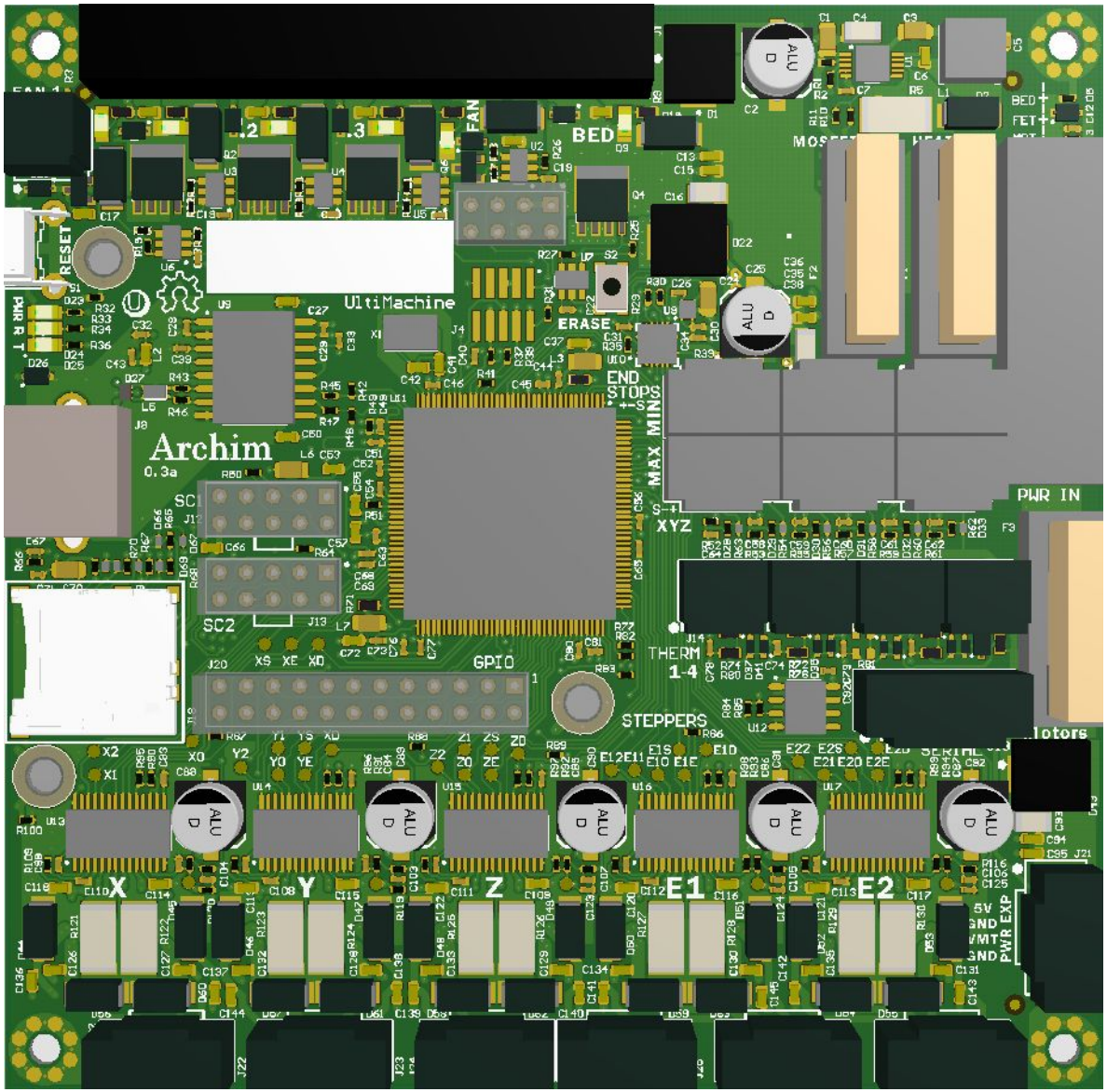
Archim
0.3a
UltiMachine
RESET
PWR
FAN
BED
ERASE
END STOPS
MAX MIN
XYZ
PWR IN
SC1
SC2
GPIO
THERM 1-4
STEPPERS
X
Y
Z
E1
E2
5V
GND
PWR EXP