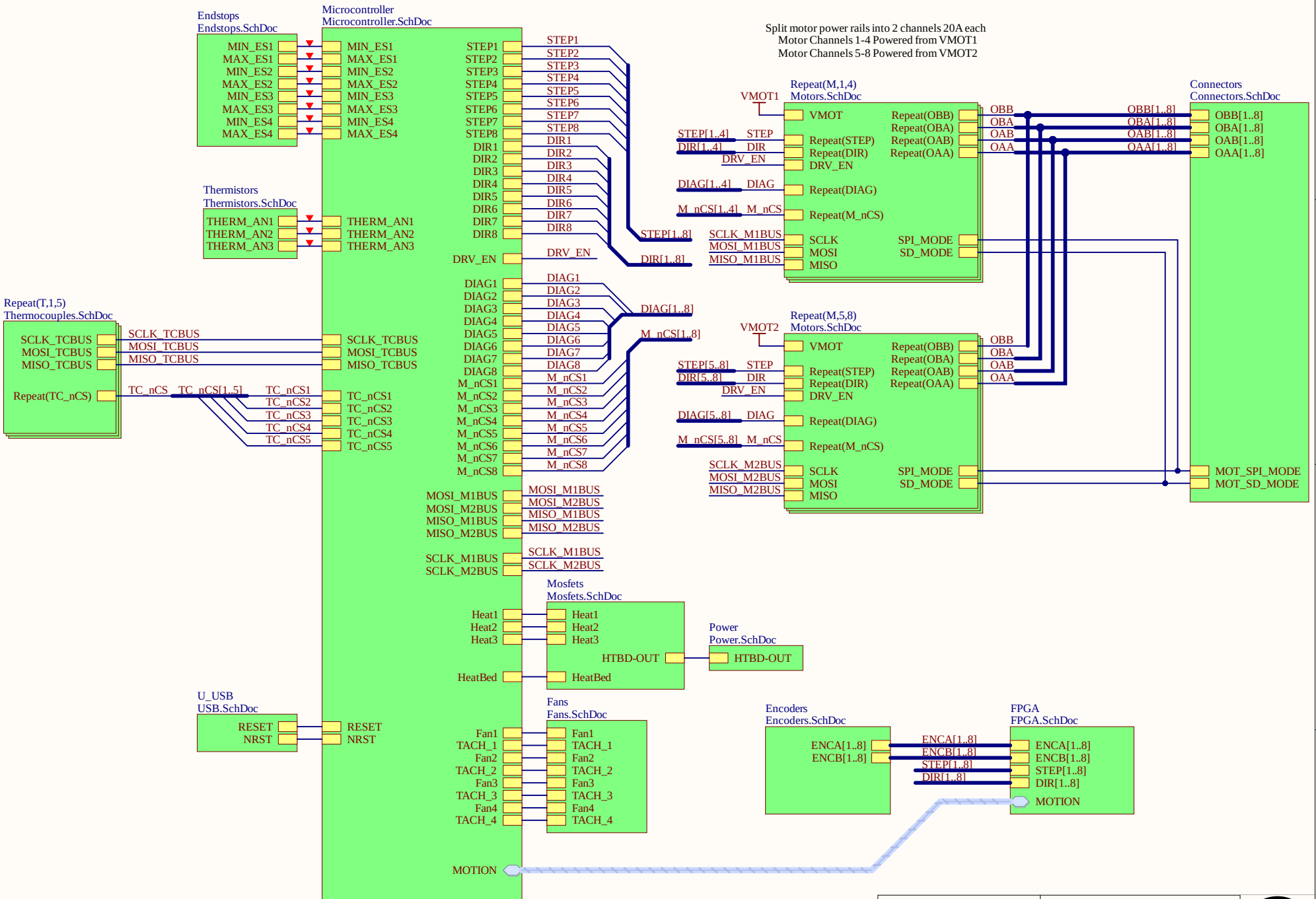

Project: Archimajor	Ver: 0.2b
Title: Blocks	File: Archimajor.SchDoc
Drawn by: UltiMachine	Sheet: 1 of 11

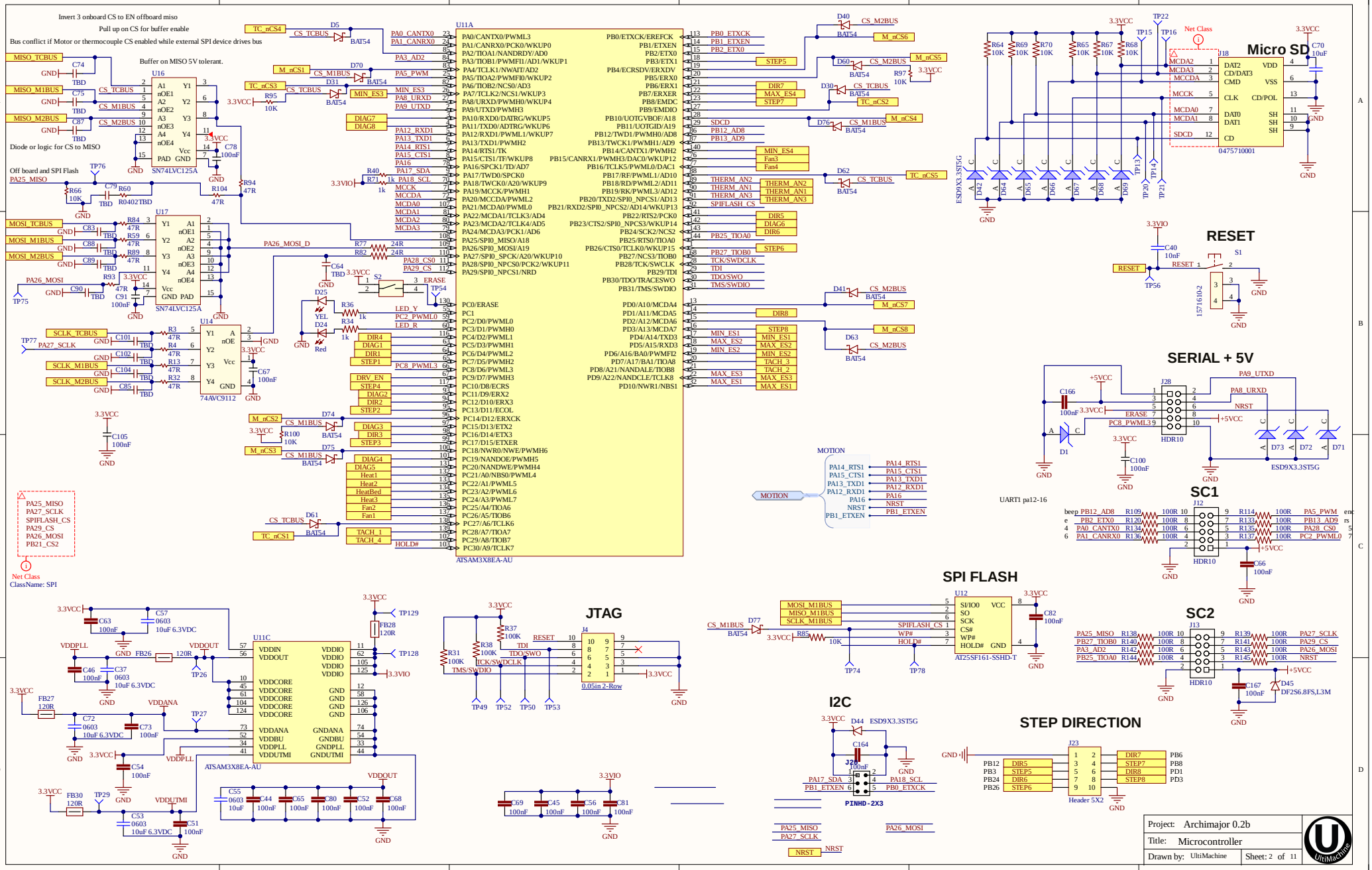
Invert 3 onboard CS to EN offboard miso
Pull up on CS for buffer enable
Bus conflict if Motor or thermocouple CS enabled while external SPI device drives bus
Buffer on MISO 5V tolerant.
Diode or logic for CS to MISO
Off board and SPI Flash
U11A
ATSAM3X8EA-AU
U16
SN74LVC125A
U17
SN74LVC125A
U14
74AVC9112
U11C
ATSAM3X8EA-AU
Micro SD
0475710001
RESET
SERIAL + 5V
SC1
SPI FLASH
AT25SF161-SSHD-T
SC2
JTAG
0.05in 2-Row
I2C
PINHD-2X3
STEP DIRECTION
Header 5X2
Net Class
ClassName: SPI
Project: Archimajor 0.2b
Title: Microcontroller
Drawn by: UltiMachine
Sheet: 2 of 11

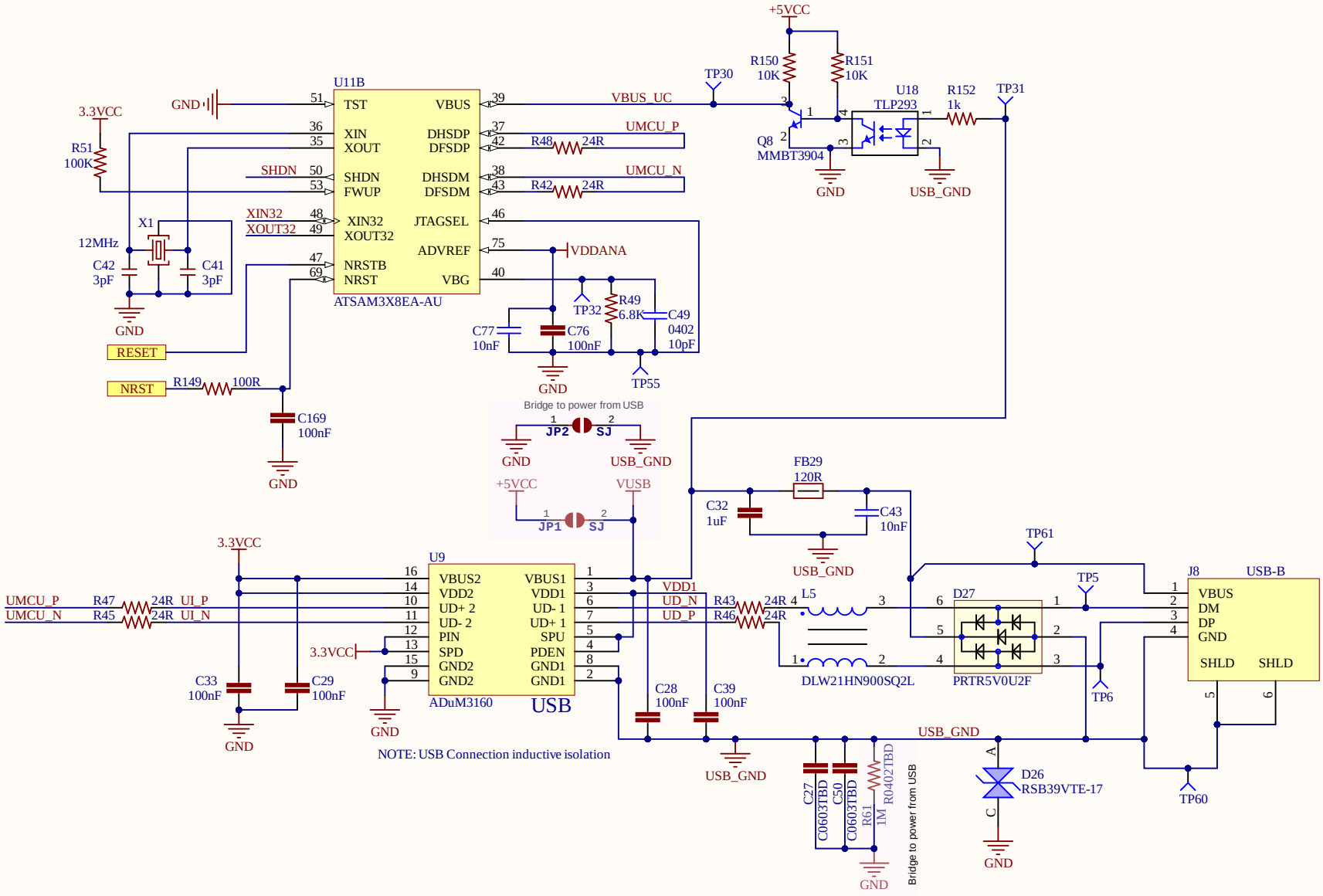

Project: Archimajor	Ver: 0.2b
Title: USB	File: USB.SchDoc
Drawn by: UltiMachine	Sheet: 3 of 11

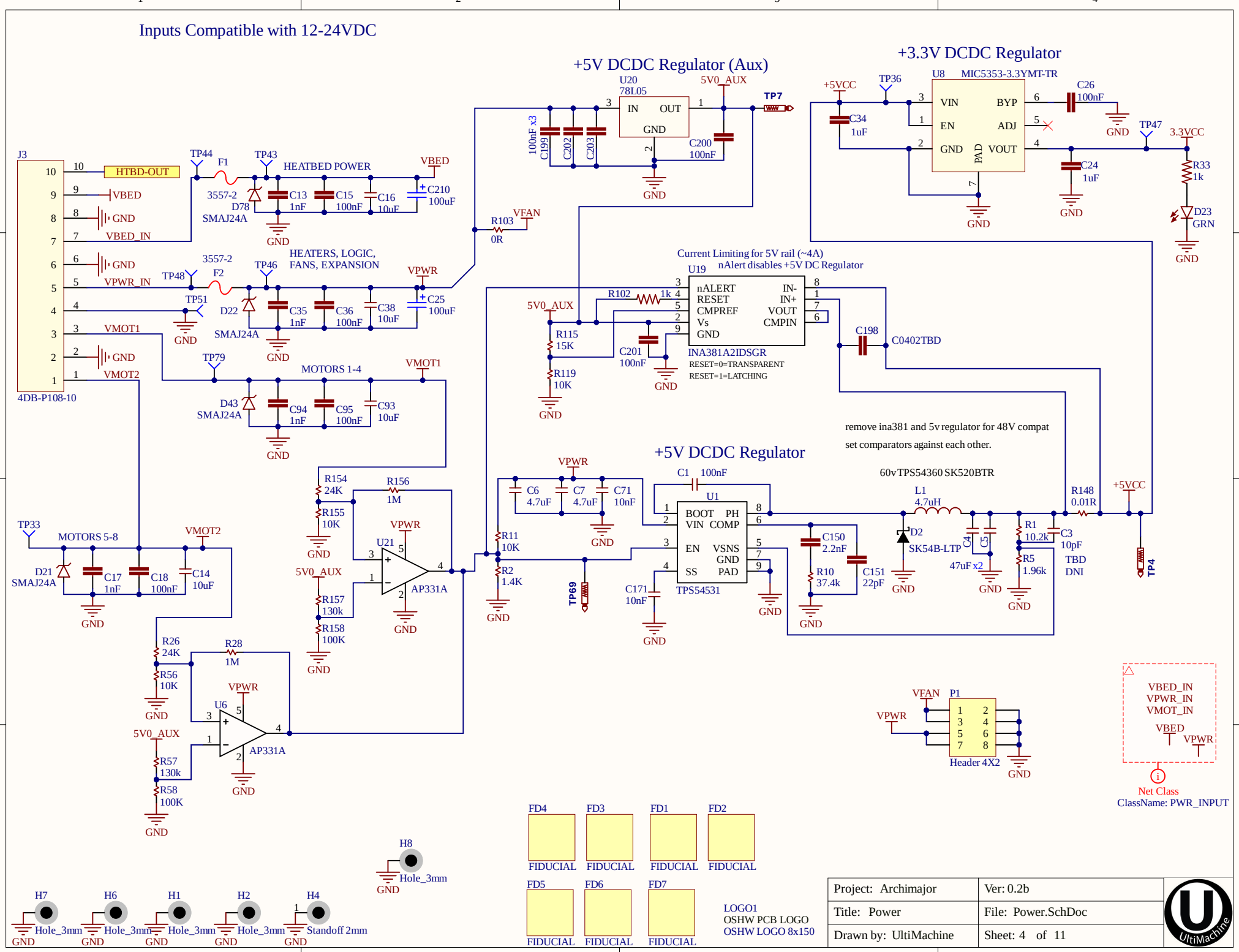
Inputs Compatible with 12-24VDC
+5V DCDC Regulator (Aux)
U20
78L05
IN
OUT
GND
5V0_AUX
TP7
C199
C202
C203
100nF x3
C200
100nF
+3.3V DCDC Regulator
U8
MIC5353-3.3YMT-TR
VIN
EN
GND
PAD
BYP
ADJ
VOUT
+5VCC
TP36
C34
1uF
C26
100nF
C24
1uF
TP47
3.3VCC
R33
1k
D23
GRN
J3
4DB-P108-10
HTBD-OUT
VBED
GND
VBED_IN
VPWR_IN
VMOT1
VMOT2
TP44
F1
TP43
HEATBED POWER
3557-2
D78
SMAJ24A
C13
1nF
C15
100nF
C16
10uF
C210
100uF
R103
0R
VFAN
HEATERS, LOGIC,
FANS, EXPANSION
TP48
F2
TP46
VPWR
D22
C35
1nF
C36
100nF
C38
10uF
C25
100uF
TP51
TP79
MOTORS 1-4
D43
C94
1nF
C95
100nF
C93
10uF
Current Limiting for 5V rail (~4A)
nAlert disables +5V DC Regulator
U19
nALERT
RESET
CMPREF
Vs
GND
IN-
IN+
VOUT
CMPIN
R102
1k
R115
15K
R119
10K
C201
100nF
C198
C0402TBD
INA381A2IDSGR
RESET=0=TRANSPARENT
RESET=1=LATCHING
remove ina381 and 5v regulator for 48V compat
set comparators against each other.
+5V DCDC Regulator
60vTPS54360 SK520BTR
U1
BOOT
VIN
EN
SS
PH
COMP
VSNS
GND
PAD
TPS54531
C1
100nF
C6
4.7uF
C7
4.7uF
C71
10nF
C171
10nF
C150
2.2nF
R10
37.4k
C151
22pF
L1
4.7uH
D2
SK54B-LTP
C4
C5
47uF x2
R1
10.2k
R5
1.96k
C3
10pF
TBD
DNI
R148
0.01R
+5VCC
TP4
TP69
R11
10K
R2
1.4K
TP33
MOTORS 5-8
D21
SMAJ24A
C17
1nF
C18
100nF
C14
10uF
R154
24K
R155
10K
R156
1M
U21
AP331A
R157
130k
R158
100K
R26
24K
R56
10K
R28
1M
U6
AP331A
R57
130k
R58
100K
VFAN
VPWR
P1
Header 4X2
VBED_IN
VPWR_IN
VMOT_IN
VBED
VPWR
Net Class
ClassName: PWR_INPUT
FD4
FD3
FD1
FD2
FD5
FD6
FD7
FIDUCIAL
H8
Hole_3mm
H7
H6
H1
H2
H4
Standoff 2mm
LOGO1
OSHW PCB LOGO
OSHW LOGO 8x150
Project: Archimajor
Ver: 0.2b
Title: Power
File: Power.SchDoc
Drawn by: UltiMachine
Sheet: 4 of 11
UltiMachine

Motor

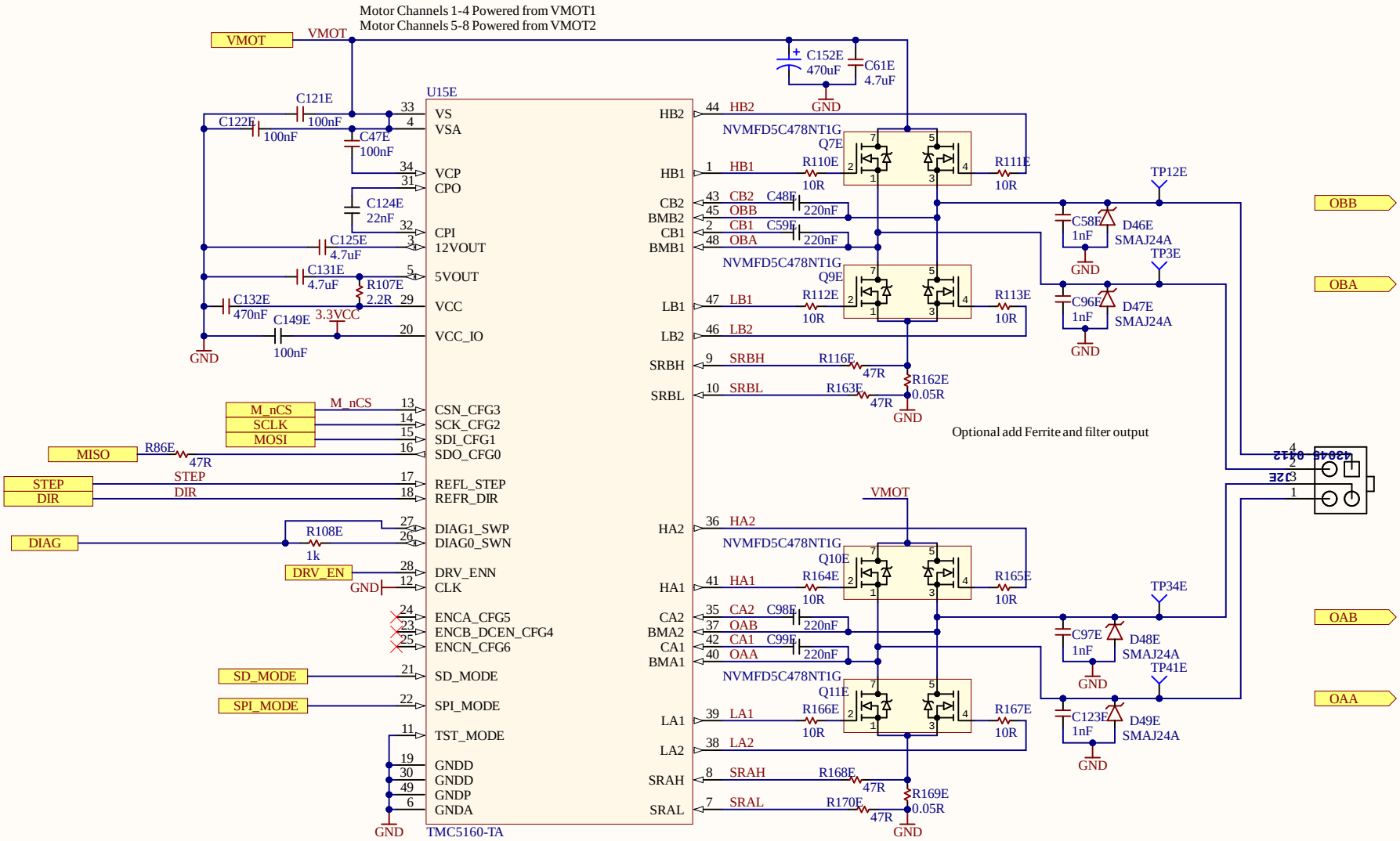

Project: Archimajor	Ver: 0.2b
Title: Motors	File: Motors.SchDoc
Drawn by: UltiMachine	Sheet: 5 of 11

Motor

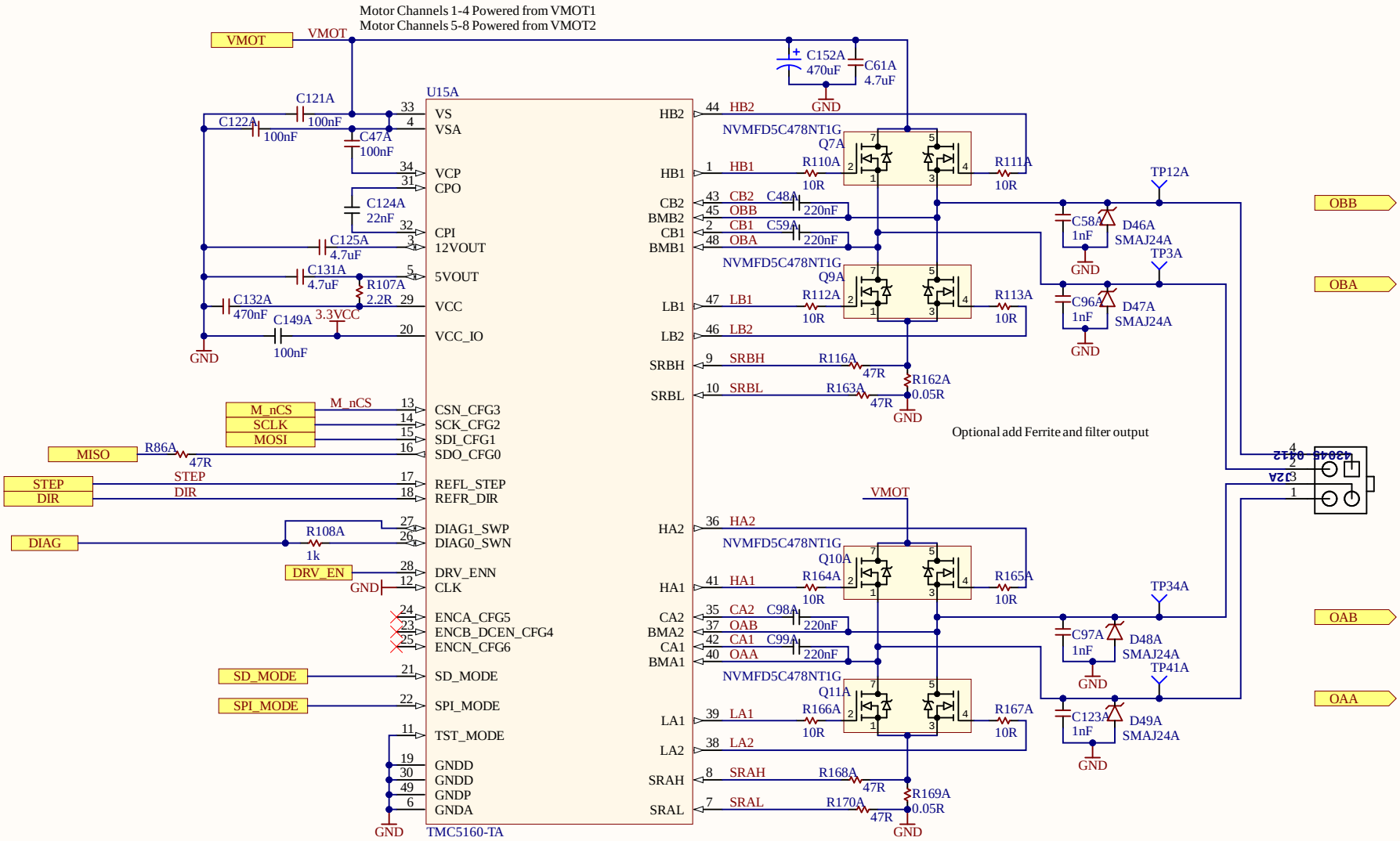

Project: Archimajor	Ver: 0.2b
Title: Motors	File: Motors.SchDoc
Drawn by: UltiMachine	Sheet: 5 of 11

Motor

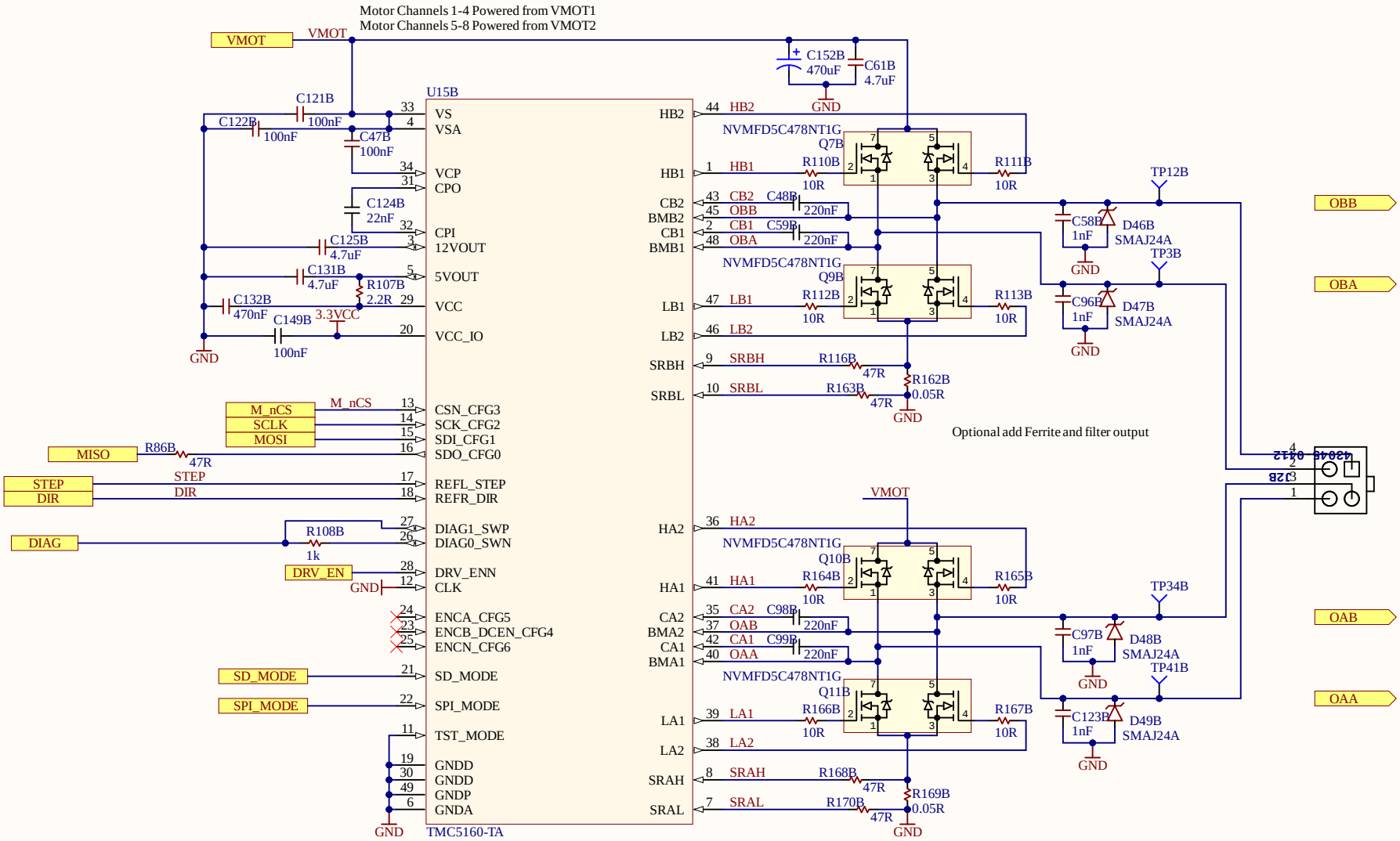

Project: Archimajor	Ver: 0.2b
Title: Motors	File: Motors.SchDoc
Drawn by: UltiMachine	Sheet: 5 of 11

Motor

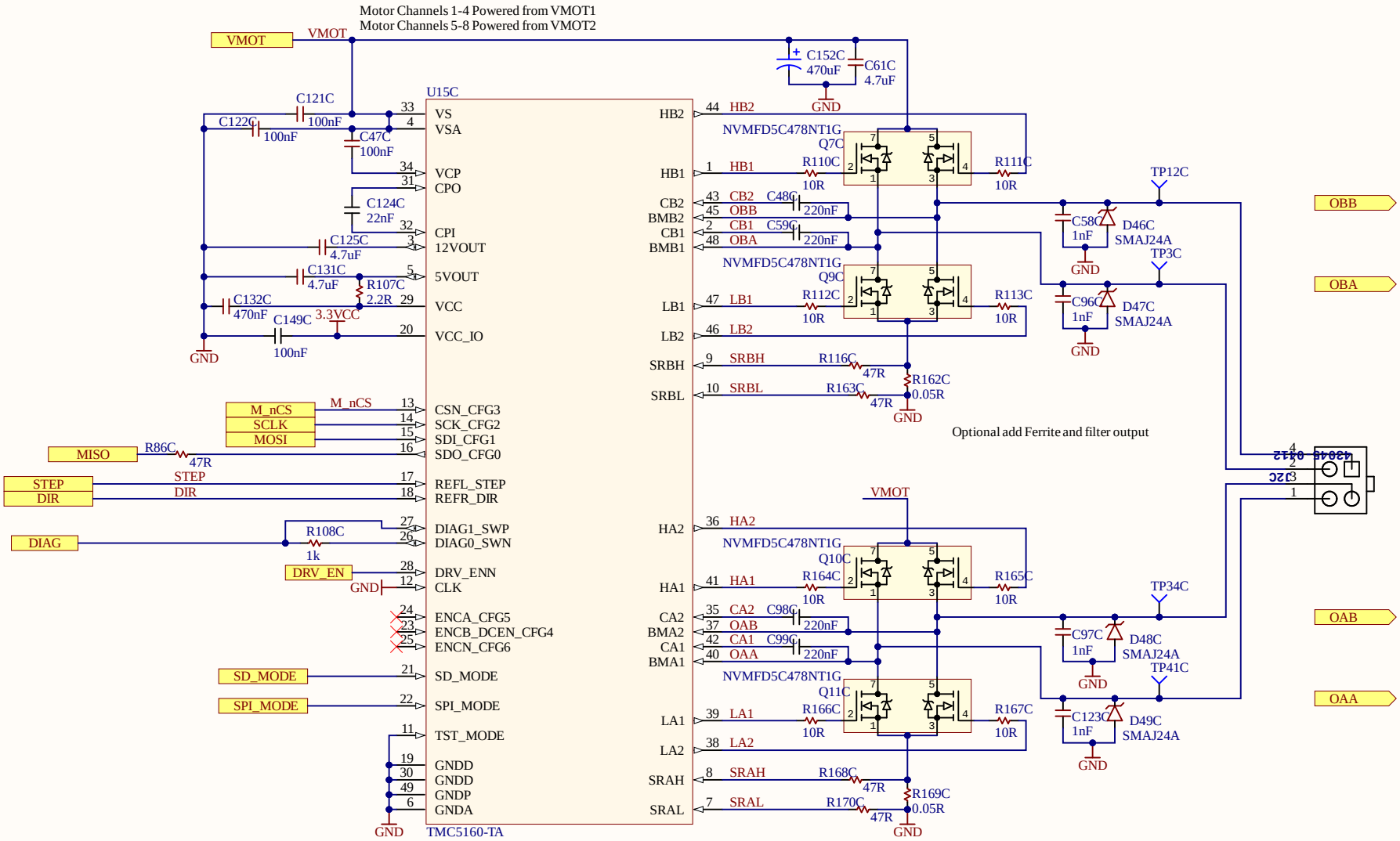

Project: Archimajor	Ver: 0.2b
Title: Motors	File: Motors.SchDoc
Drawn by: UltiMachine	Sheet: 5 of 11

Motor

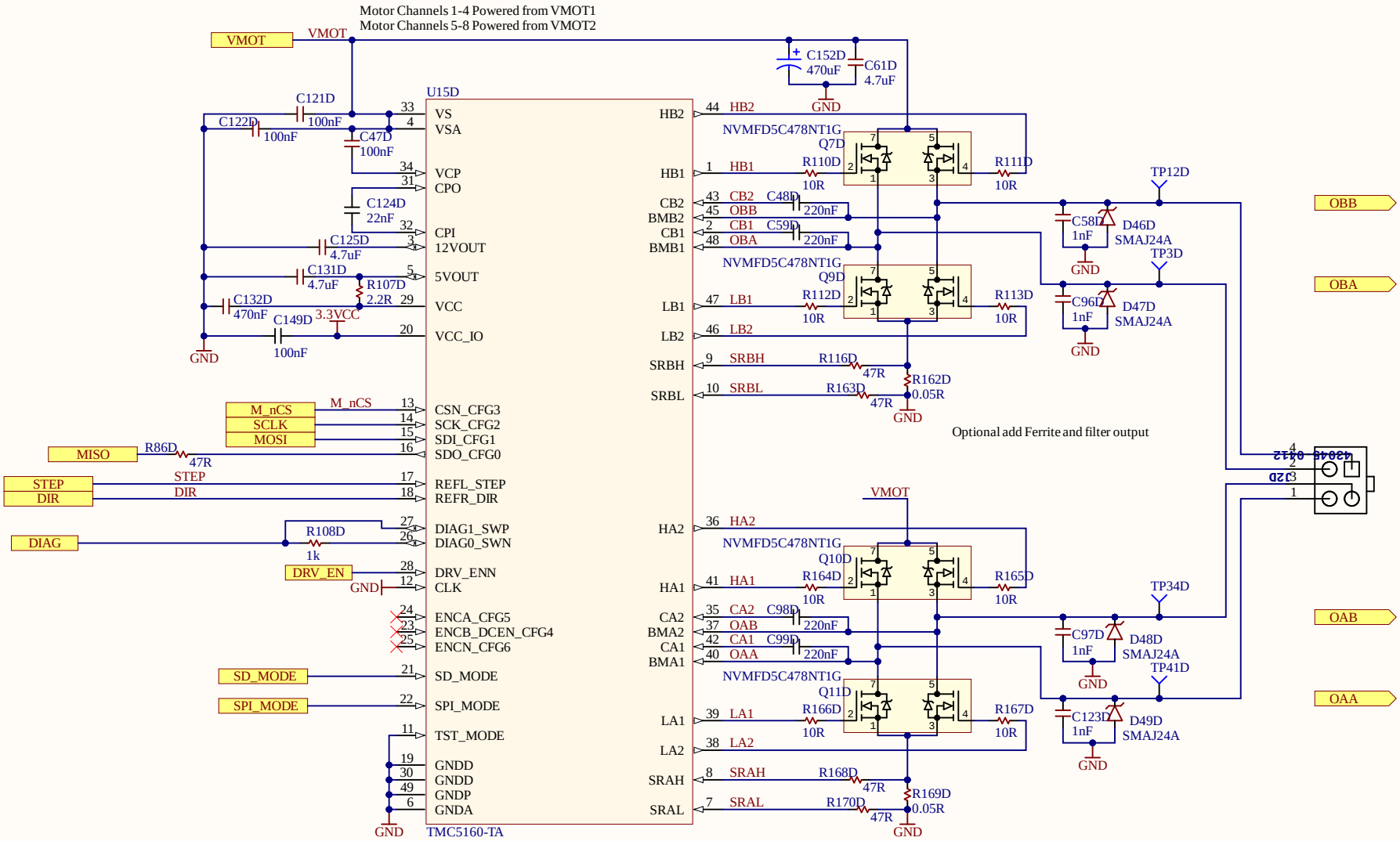

Project: Archimajor	Ver: 0.2b
Title: Motors	File: Motors.SchDoc
Drawn by: UltiMachine	Sheet: 5 of 11

Motor

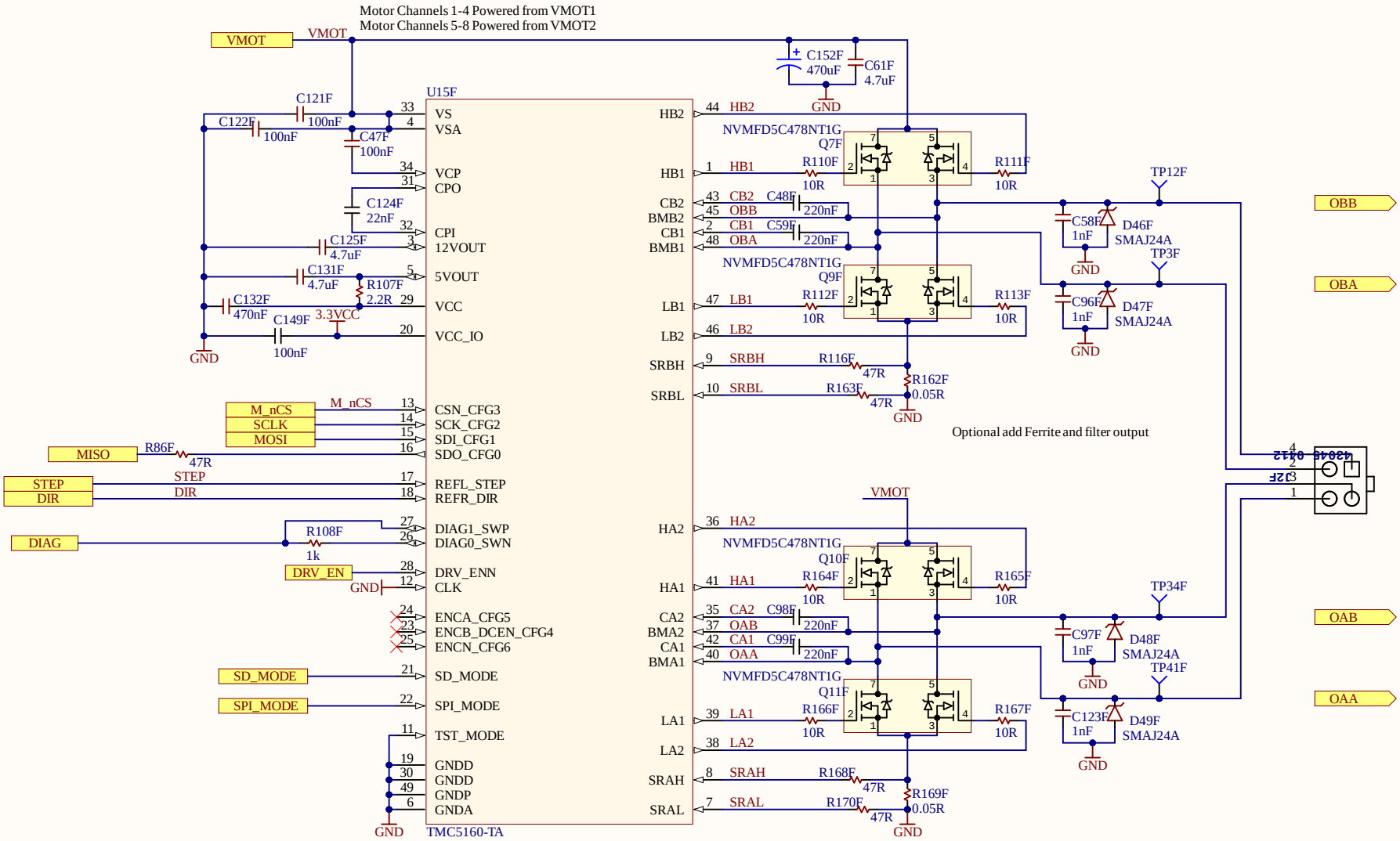

Project: Archimajor	Ver: 0.2b
Title: Motors	File: Motors.SchDoc
Drawn by: UltiMachine	Sheet: 5 of 11

Motor

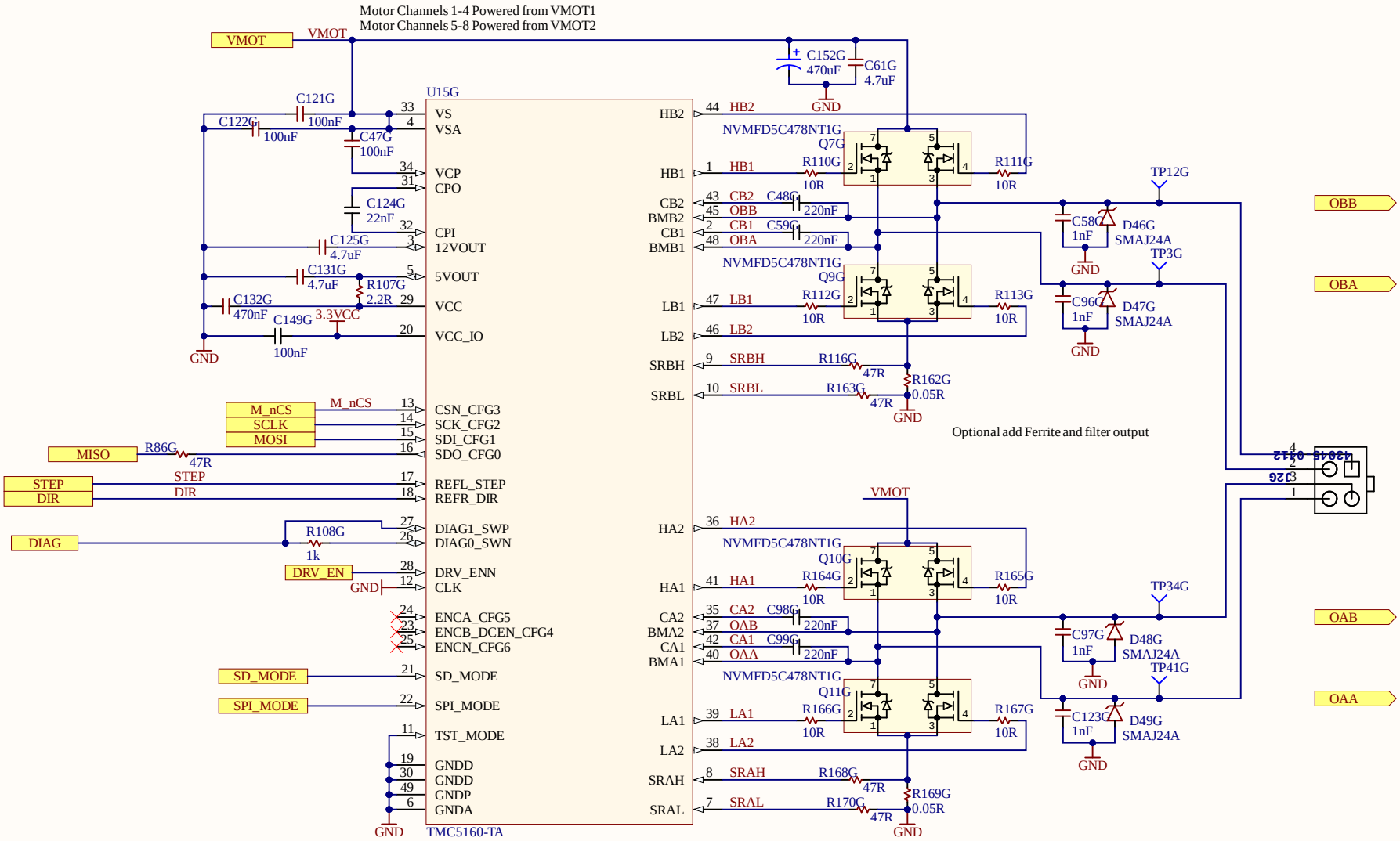

Project: Archimajor	Ver: 0.2b
Title: Motors	File: Motors.SchDoc
Drawn by: UltiMachine	Sheet: 5 of 11

Motor

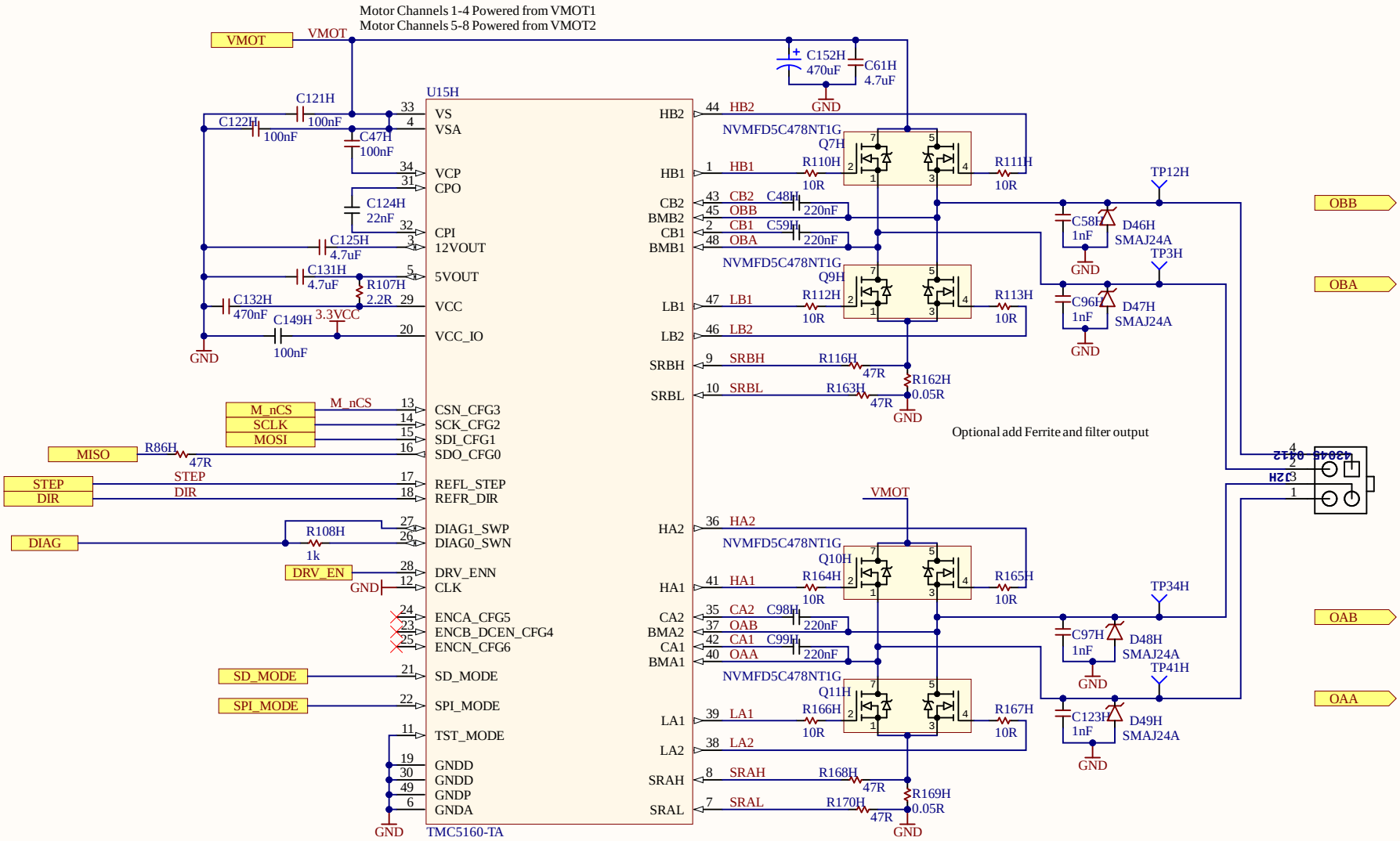

Project: Archimajor	Ver: 0.2b
Title: Motors	File: Motors.SchDoc
Drawn by: UltiMachine	Sheet: 5 of 11

End Stop Channels

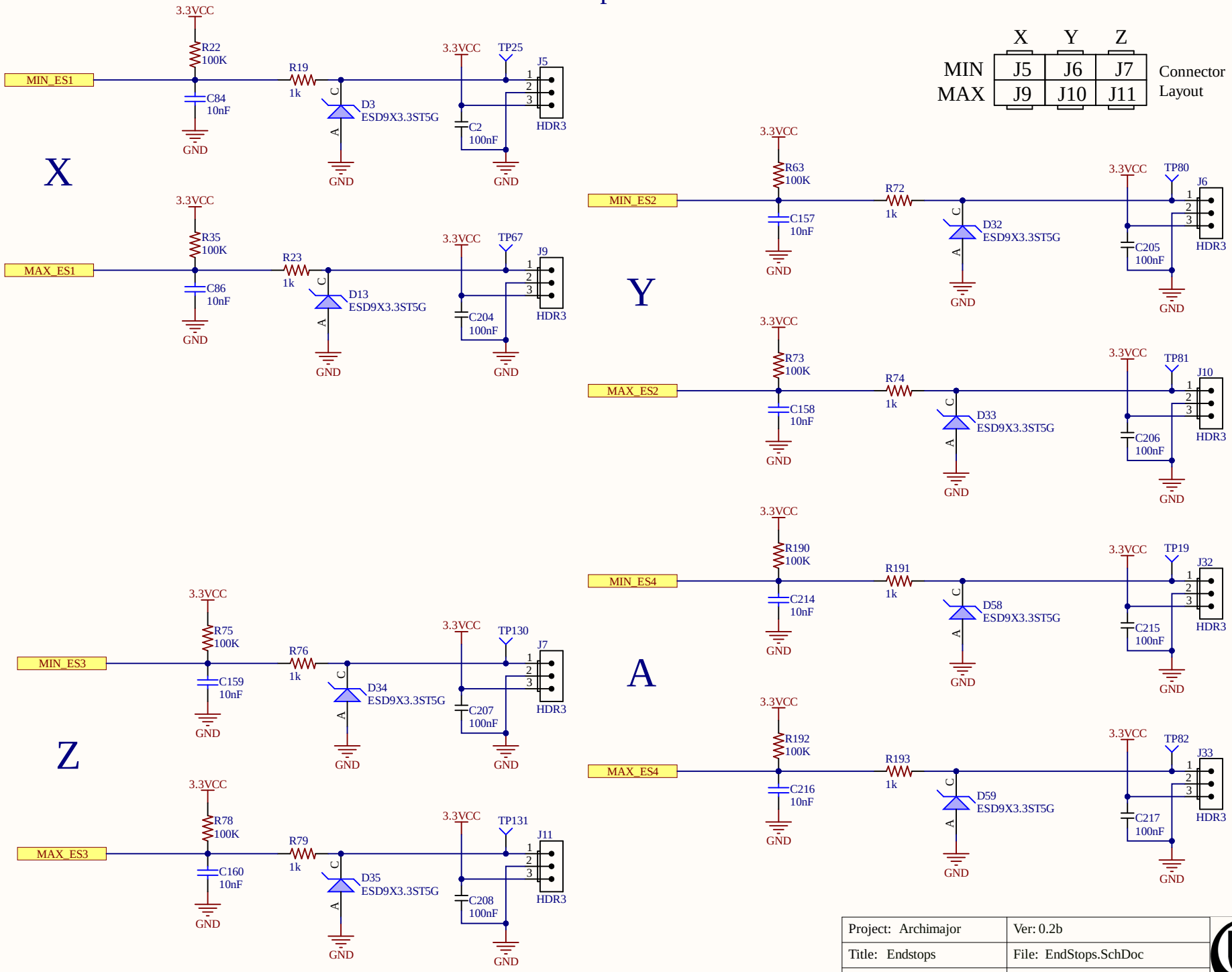

Project: Archimajor	Ver: 0.2b
Title: Endstops	File: EndStops.SchDoc
Drawn by: UltiMachine	Sheet: 6 of 11

Thermistor Channels

Thermistor Connector Layout

1	2	3	4
J14	J15	J16	J17

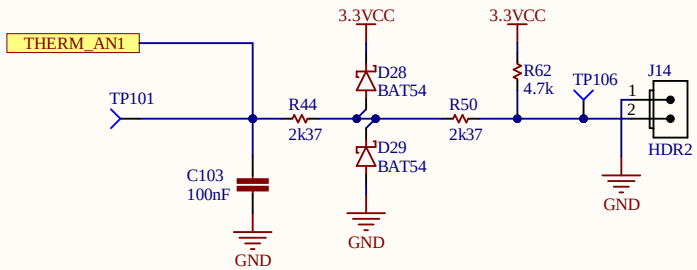

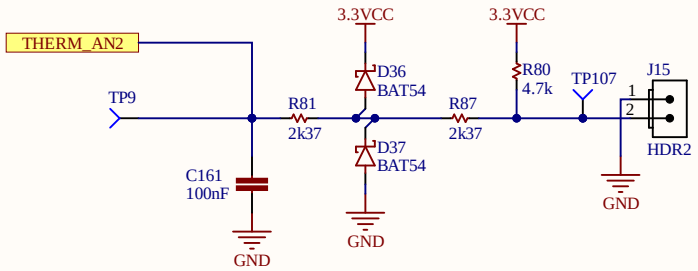

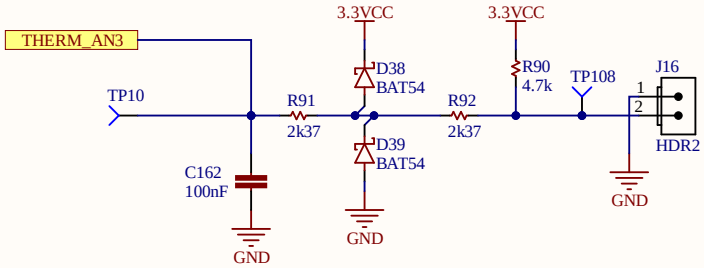

Project: Archimajor	Ver: 0.2b
Title: Thermistors	File: Thermistors.SchDoc
Drawn by: UltiMachine	Sheet: 7 of 11

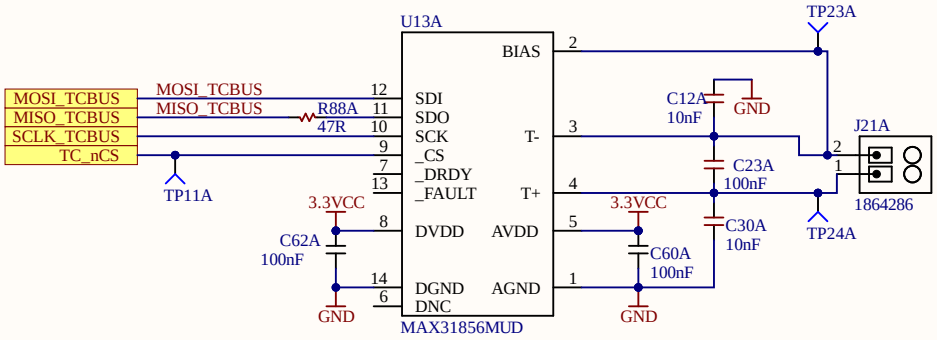

Project: Archimajor	Ver: 0.2b
Title: Thermocouples	File: Thermocouples.SchDoc
Drawn by: UltiMachine	Sheet: 8 of 11

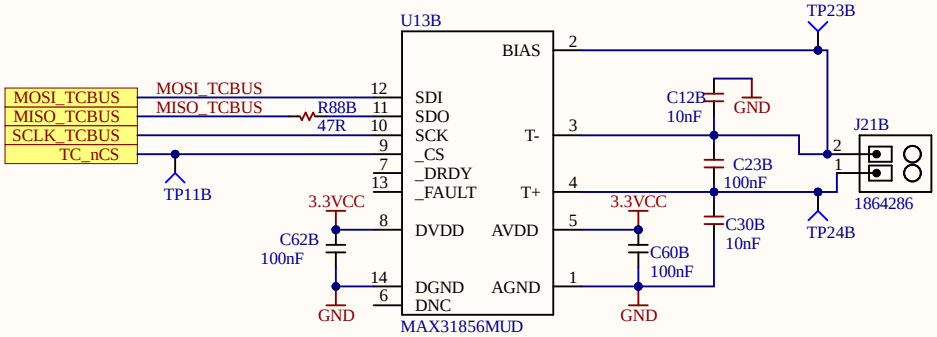

Project: Archimajor	Ver: 0.2b
Title: Thermocouples	File: Thermocouples.SchDoc
Drawn by: UltiMachine	Sheet: 8 of 11

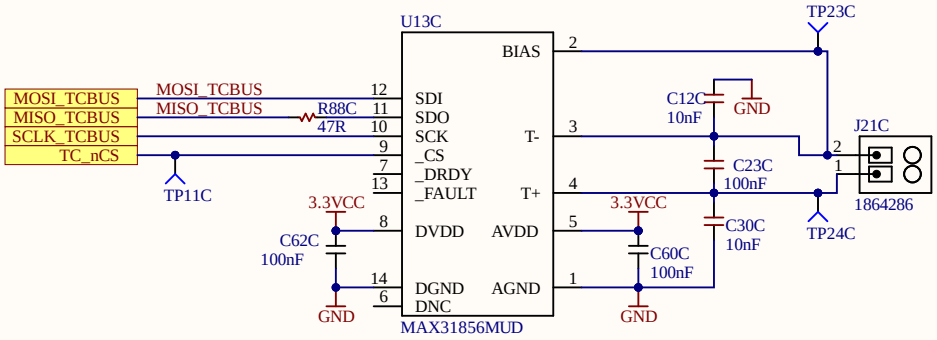

Project: Archimajor	Ver: 0.2b
Title: Thermocouples	File: Thermocouples.SchDoc
Drawn by: UltiMachine	Sheet: 8 of 11

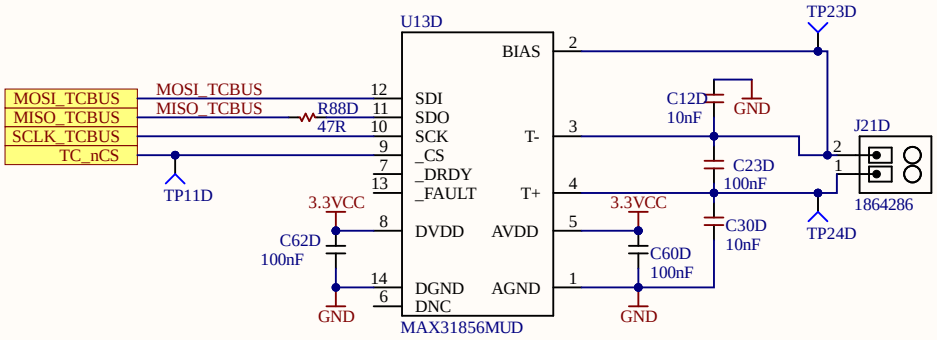

Project: Archimajor	Ver: 0.2b
Title: Thermocouples	File: Thermocouples.SchDoc
Drawn by: UltiMachine	Sheet: 8 of 11

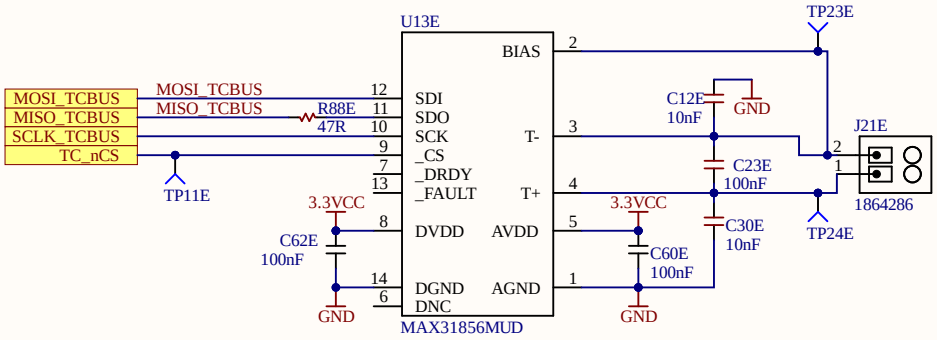

Project: Archimajor	Ver: 0.2b
Title: Thermocouples	File: Thermocouples.SchDoc
Drawn by: UltiMachine	Sheet: 8 of 11

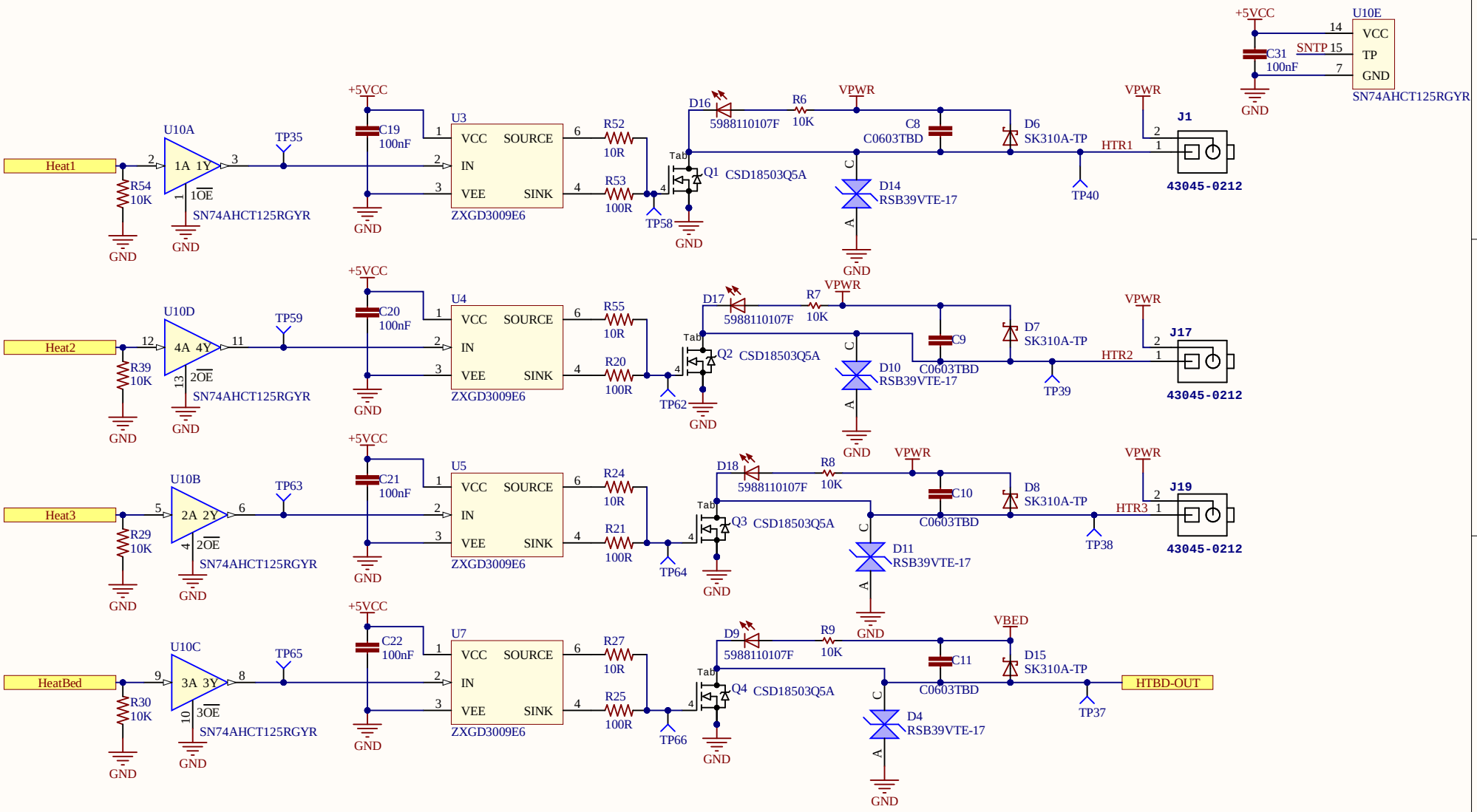

Project: Archimajor	Ver: 0.2b
Title: Mosfets	File: Mosfets.SchDoc
Drawn by: UltiMachine	Sheet: 9 of 11

Fans

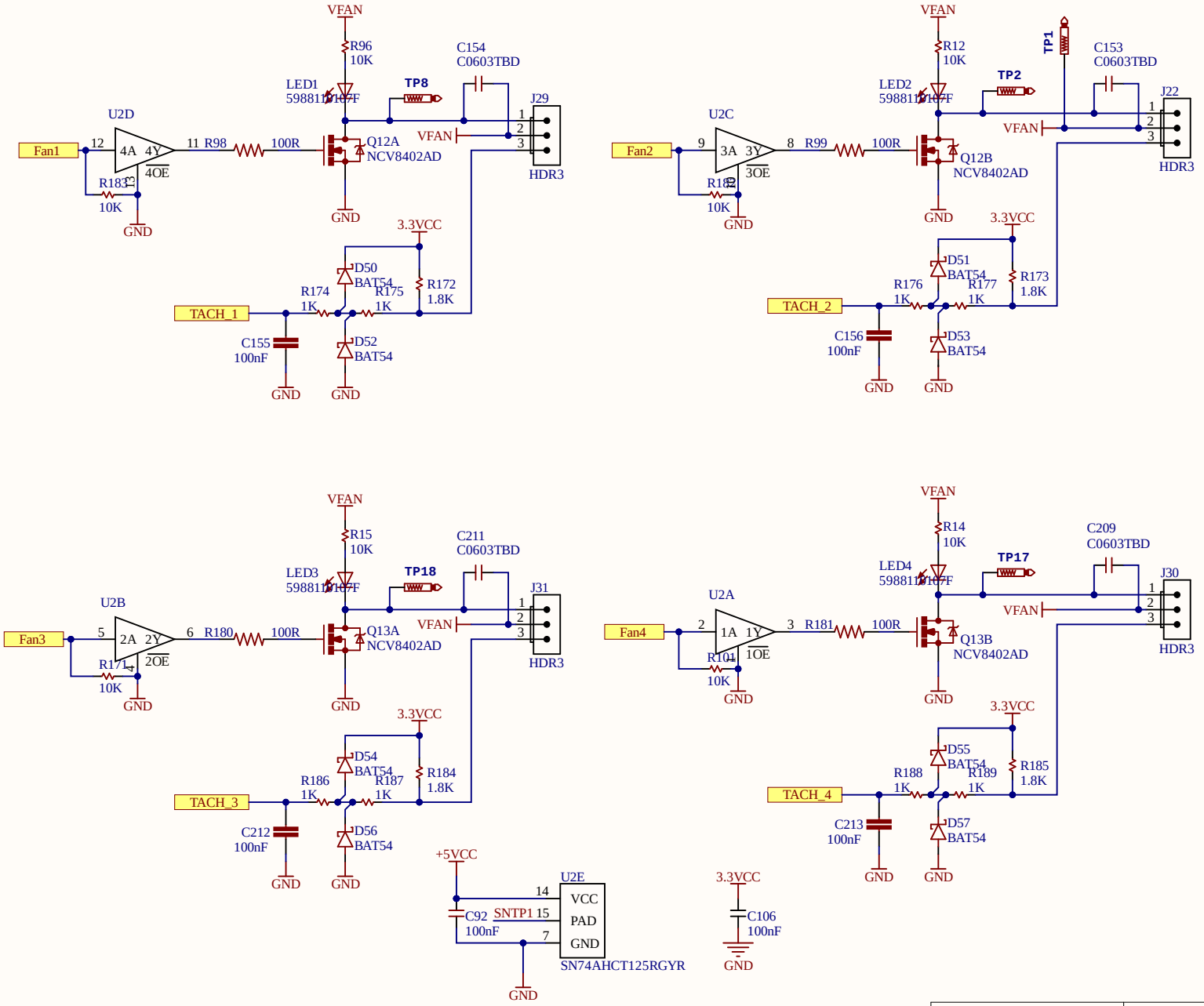

Project: Archimajor	Ver: 0.2b
Title: Fans	File: Fans.SchDoc
Drawn by: UltiMachine	Sheet: 10 of 11

Connectors

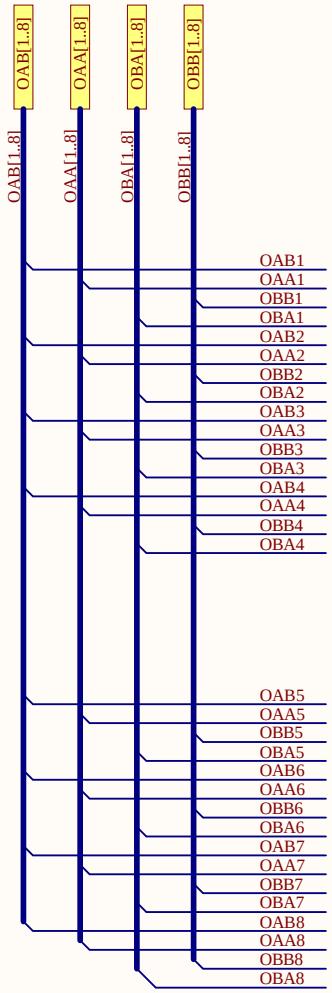

Motor 1

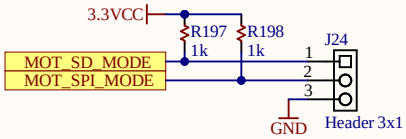

Project: Archimajor	Ver: 0.2b
Title: Connectors	File: Connectors.SchDoc
Drawn by: UltiMachine	Sheet: 11 of 11

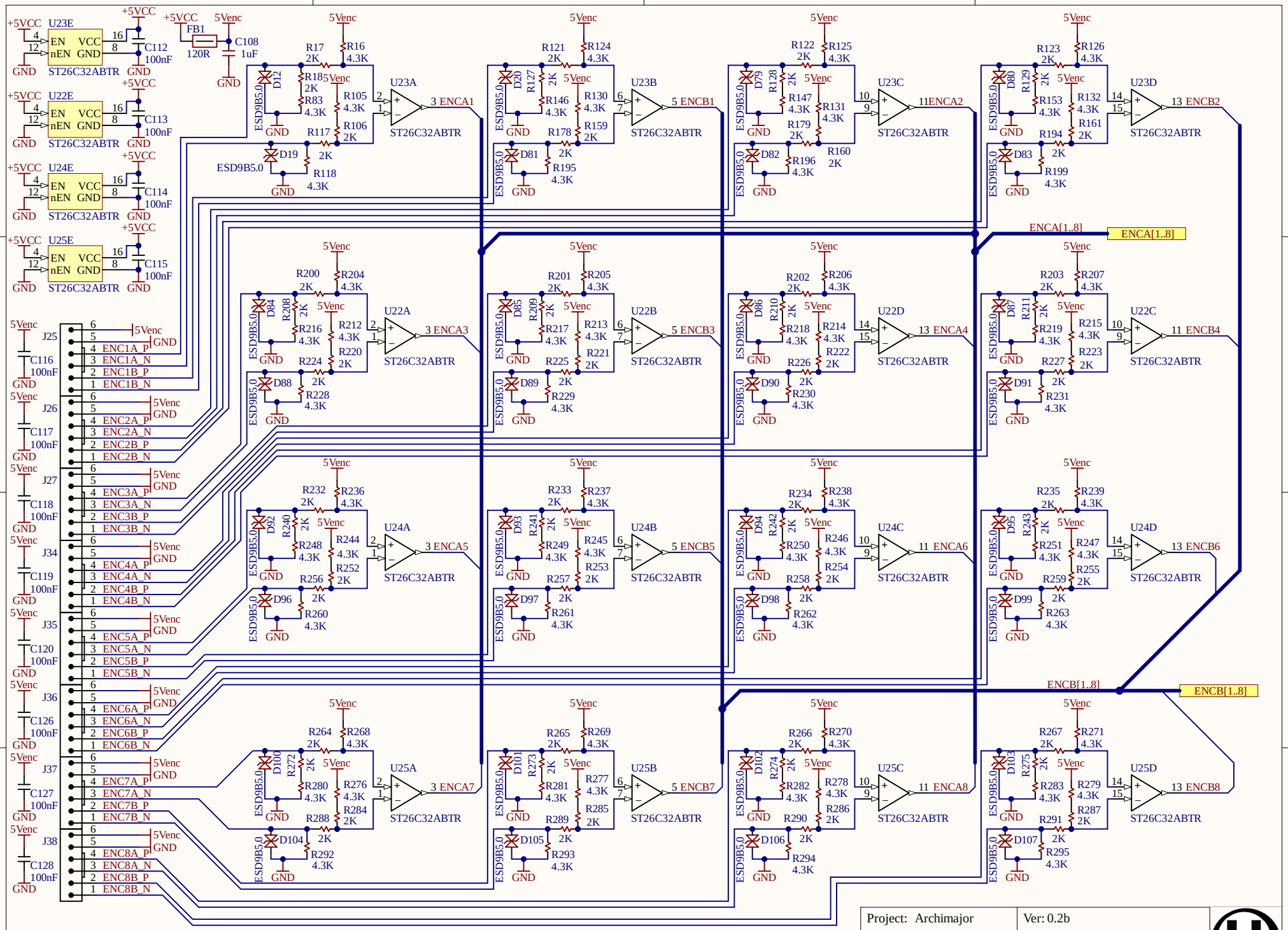
U23E
U22E
U24E
U25E
ST26C32ABTR
+5VCC
GND
C112 100nF
C113 100nF
C114 100nF
C115 100nF
FB1
120R
C108 1uF
5Venc
ESD9B5.0
U23A
U23B
U23C
U23D
U22A
U22B
U22D
U22C
U24A
U24B
U24C
U24D
U25A
U25B
U25C
U25D
3 ENCA1
5 ENCB1
11ENCA2
13 ENCB2
3 ENCA3
5 ENCB3
13 ENCA4
11 ENCB4
3 ENCA5
5 ENCB5
11 ENCA6
13 ENCB6
3 ENCA7
5 ENCB7
11 ENCA8
13 ENCB8
ENCA[1..8]
ENCB[1..8]
J25
J26
J27
J34
J35
J36
J37
J38
ENC1A_P
ENC1A_N
ENC1B_P
ENC1B_N
ENC2A_P
ENC2A_N
ENC2B_P
ENC2B_N
ENC3A_P
ENC3A_N
ENC3B_P
ENC3B_N
ENC4A_P
ENC4A_N
ENC4B_P
ENC4B_N
ENC5A_P
ENC5A_N
ENC5B_P
ENC5B_N
ENC6A_P
ENC6A_N
ENC6B_P
ENC6B_N
ENC7A_P
ENC7A_N
ENC7B_P
ENC7B_N
ENC8A_P
ENC8A_N
ENC8B_P
ENC8B_N
C116 100nF
C117 100nF
C118 100nF
C119 100nF
C120 100nF
C126 100nF
C127 100nF
C128 100nF
Project: Archimajor
Ver: 0.2b
Title: *
File: Encoders.SchDoc
Drawn by: UltiMachine
Sheet: * of *
UltiMachine

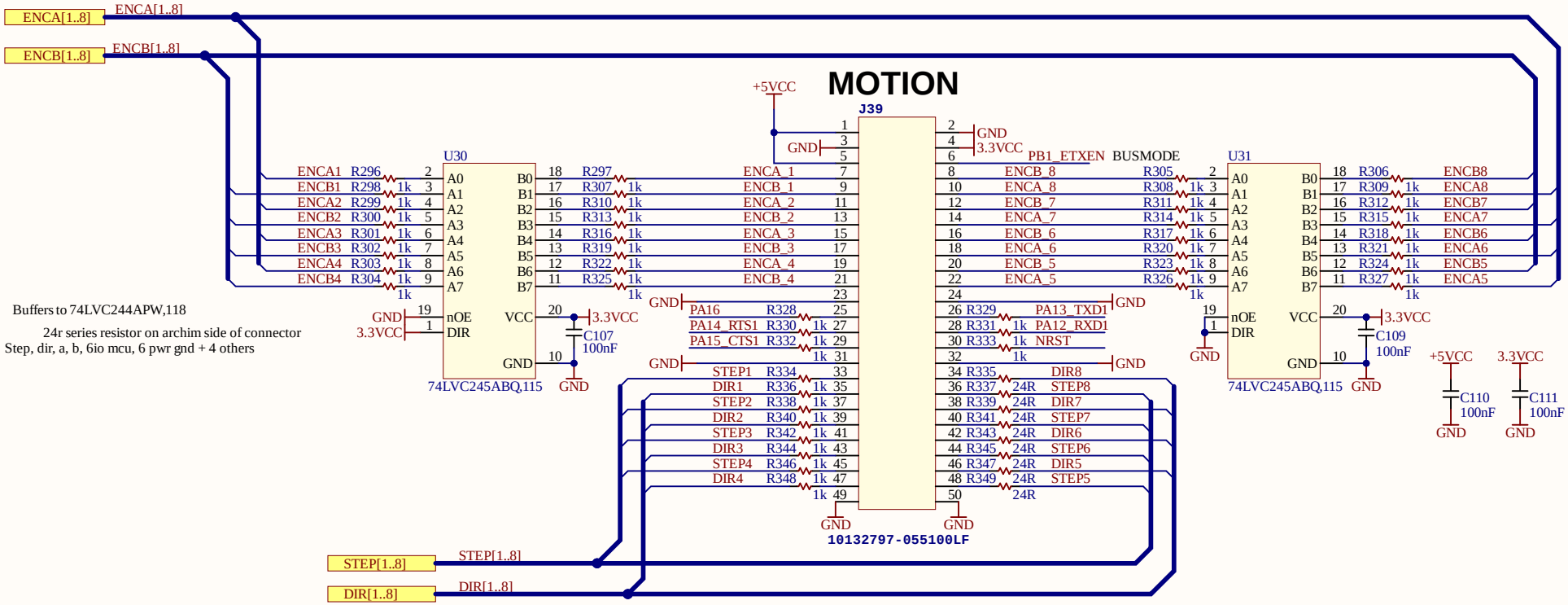

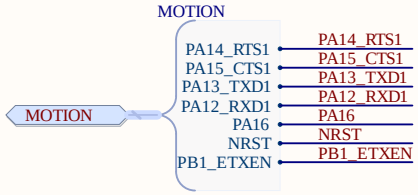

Project: Archimajor	Ver: 0.2b
Title: *	File: FPGA.SchDoc
Drawn by: UltiMachine	Sheet: * of *