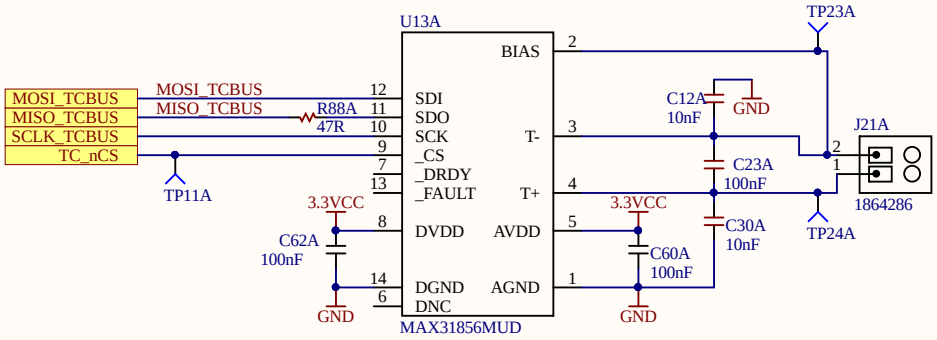

Project: Archimajor	Ver: 0.1b
Title: *	File: Thermocouples.SchDoc
Drawn by: UltiMachine	Sheet: * of *

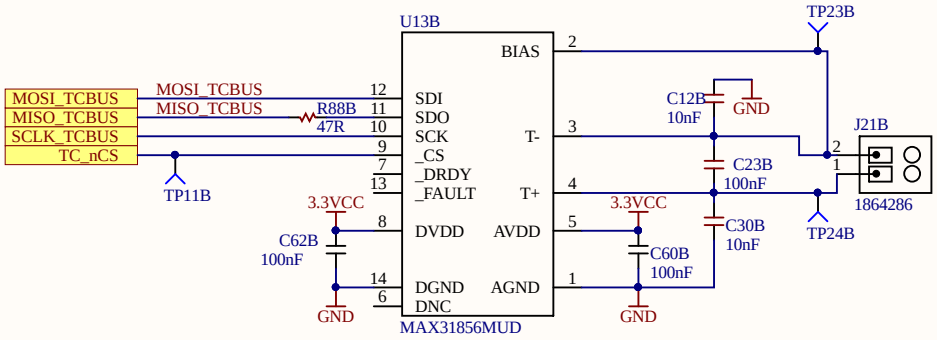

Project: Archimajor	Ver: 0.1b
Title: *	File: Thermocouples.SchDoc
Drawn by: UltiMachine	Sheet: * of *

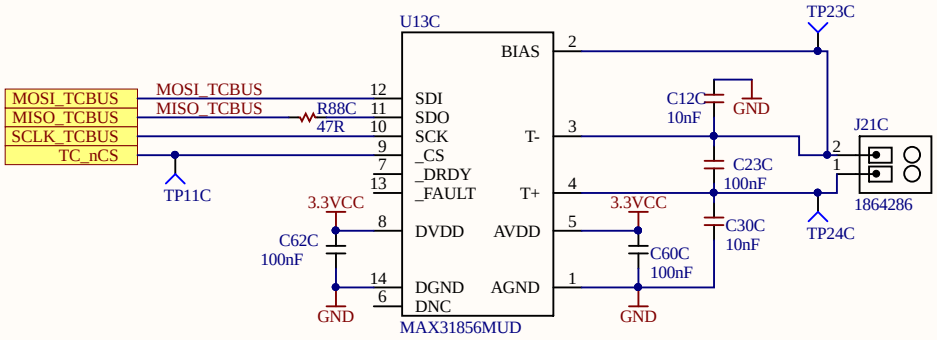

Project: Archimajor	Ver: 0.1b
Title: *	File: Thermocouples.SchDoc
Drawn by: UltiMachine	Sheet: * of *

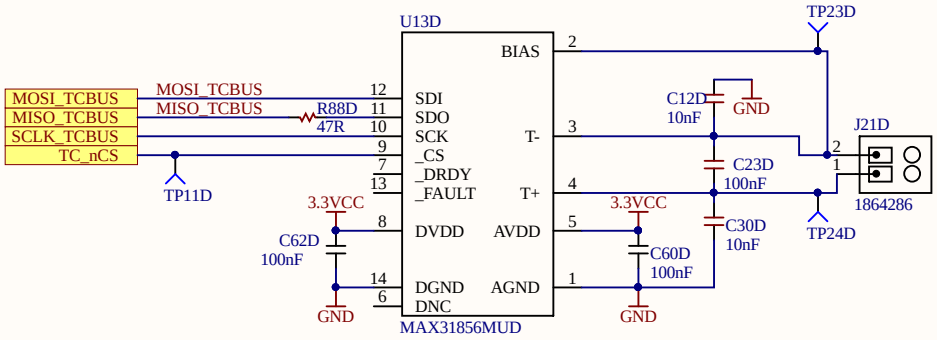

Project: Archimajor	Ver: 0.1b
Title: *	File: Thermocouples.SchDoc
Drawn by: UltiMachine	Sheet: * of *

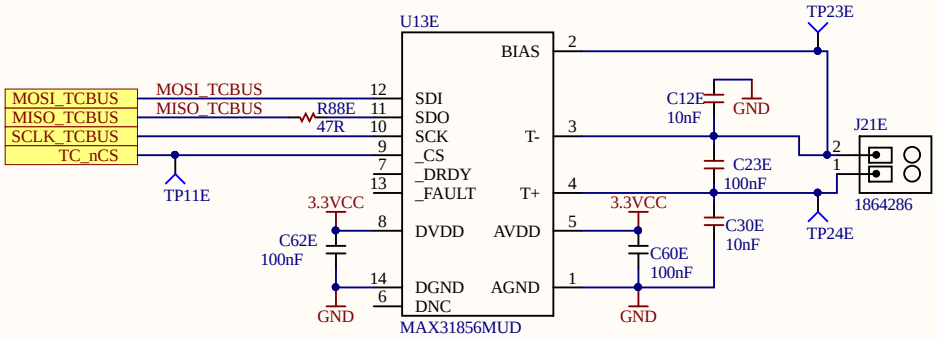

Project: Archimajor	Ver: 0.1b
Title: *	File: Thermocouples.SchDoc
Drawn by: UltiMachine	Sheet: * of *

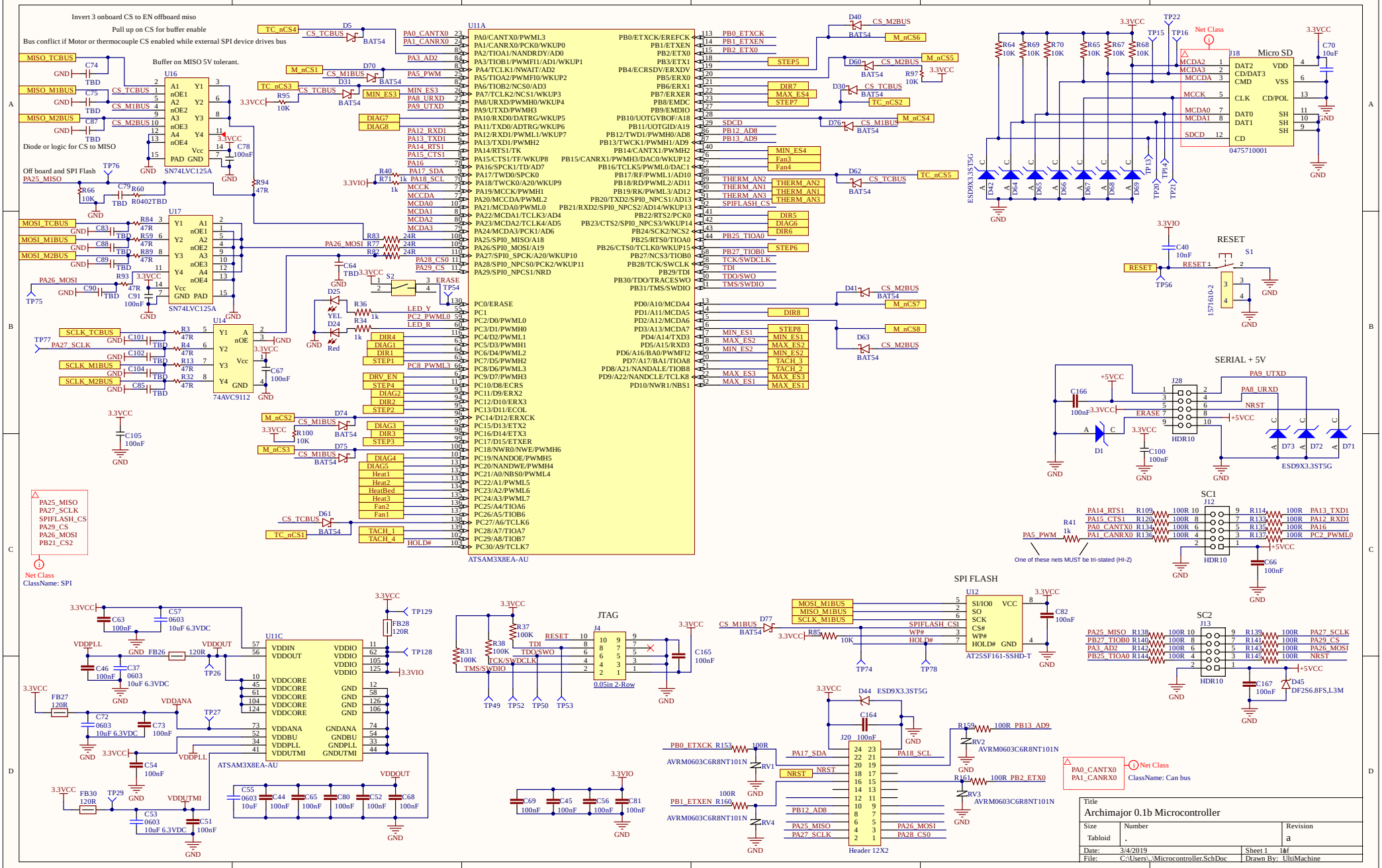
Invert 3 onboard CS to EN offboard miso
Pull up on CS for buffer enable
Bus conflict if Motor or thermocouple CS enabled while external SPI device drives bus
Buffer on MISO 5V tolerant.
Diode or logic for CS to MISO
Off board and SPI Flash
U11A
ATSAM3X8EA-AU
U16
SN74LVC125A
U17
SN74LVC125A
U14
74AVC9112
U11C
ATSAM3X8EA-AU
U18
Micro SD
0475710001
RESET
SERIAL + 5V
SC1
SC2
SPI FLASH
U12
AT25SF161-SSHD-T
JTAG
J4
0.05in 2-Row
Net Class
ClassName: SPI
Net Class
ClassName: Can bus
One of these nets MUST be tri-stated (HI-Z)
Header 12X2
Title
Archimajor 0.1b Microcontroller
Size
Tabloid
Number
.
Revision
a
Date: 3/4/2019
Sheet 1 of 1
File: C:\Users\..\Microcontroller.SchDoc
Drawn By: UltiMachine

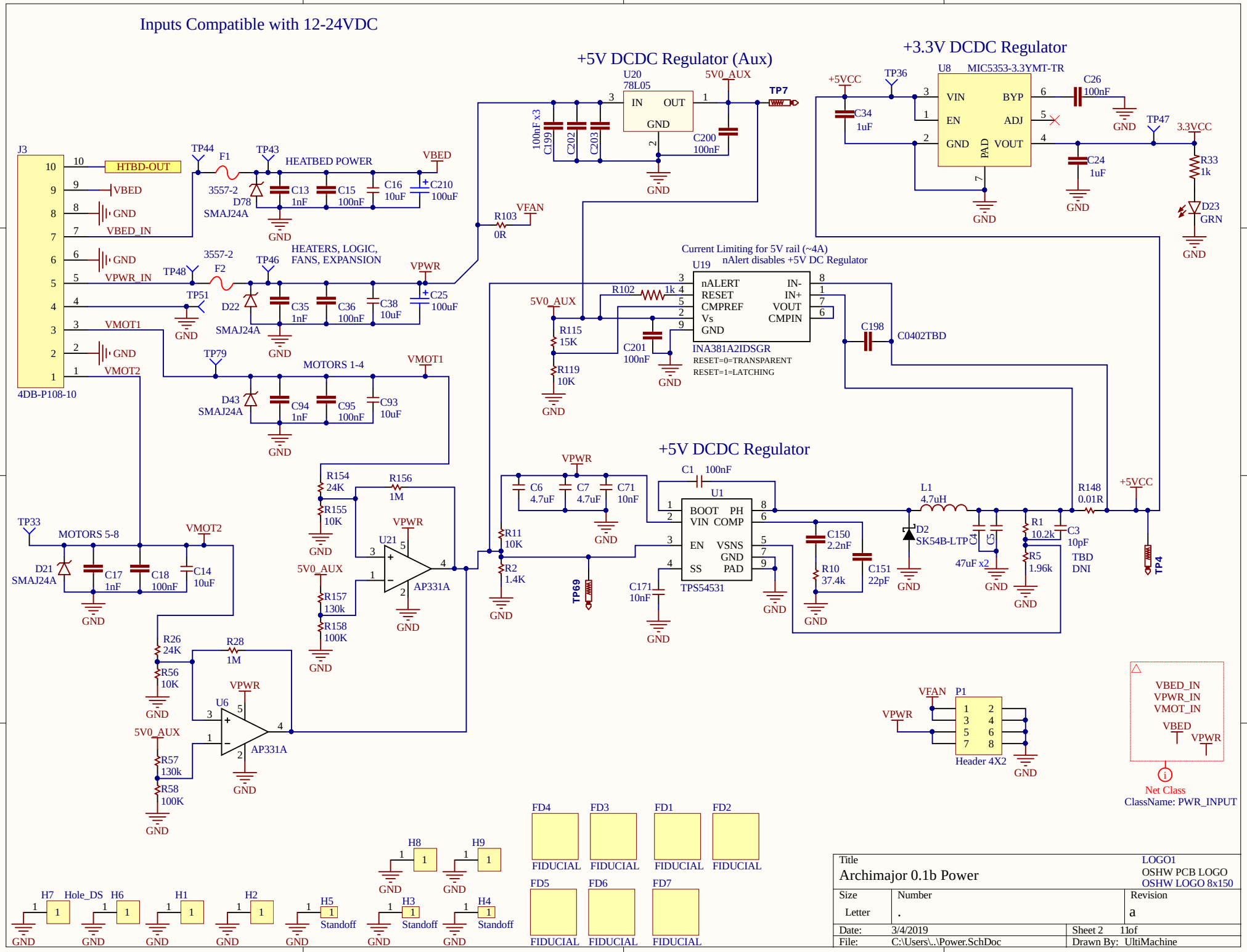

Title		LOGO1
Archimajor 0.1b Power		OSHW PCB LOGO OSHW LOGO 8x150
Size Letter	Number .	Revision a
Date: 3/4/2019	Sheet 2 1of	
File: C:\Users\..\Power.SchDoc	Drawn By: UltiMachine	

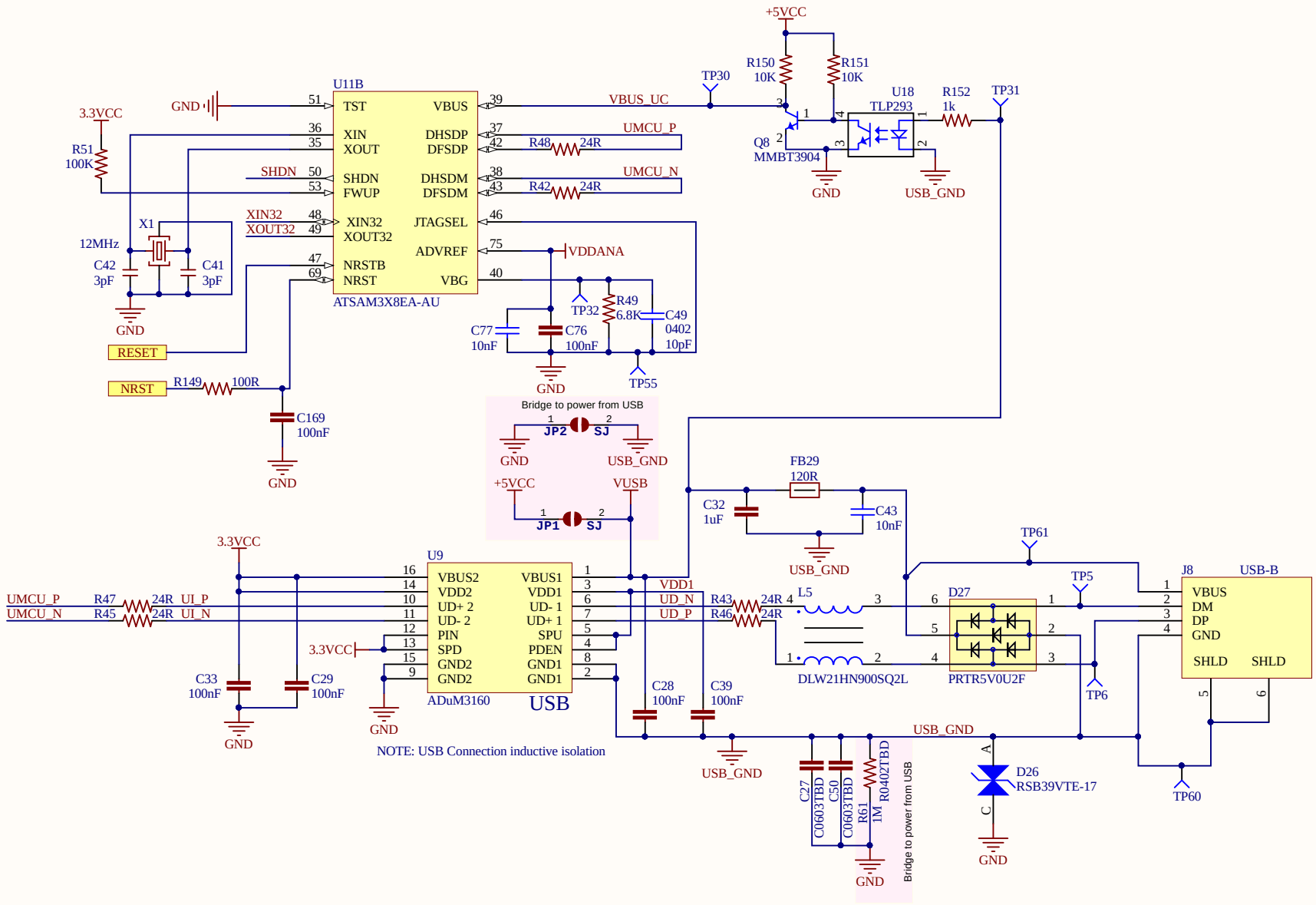

Title		
Archimajor 0.1b USB		
Size: Letter	Number: .	Revision: a
Date: 3/4/2019		Sheet 3 11of
File: C:\Users\..\USB.SchDoc		Drawn By: UltiMachine

End Stop Channels

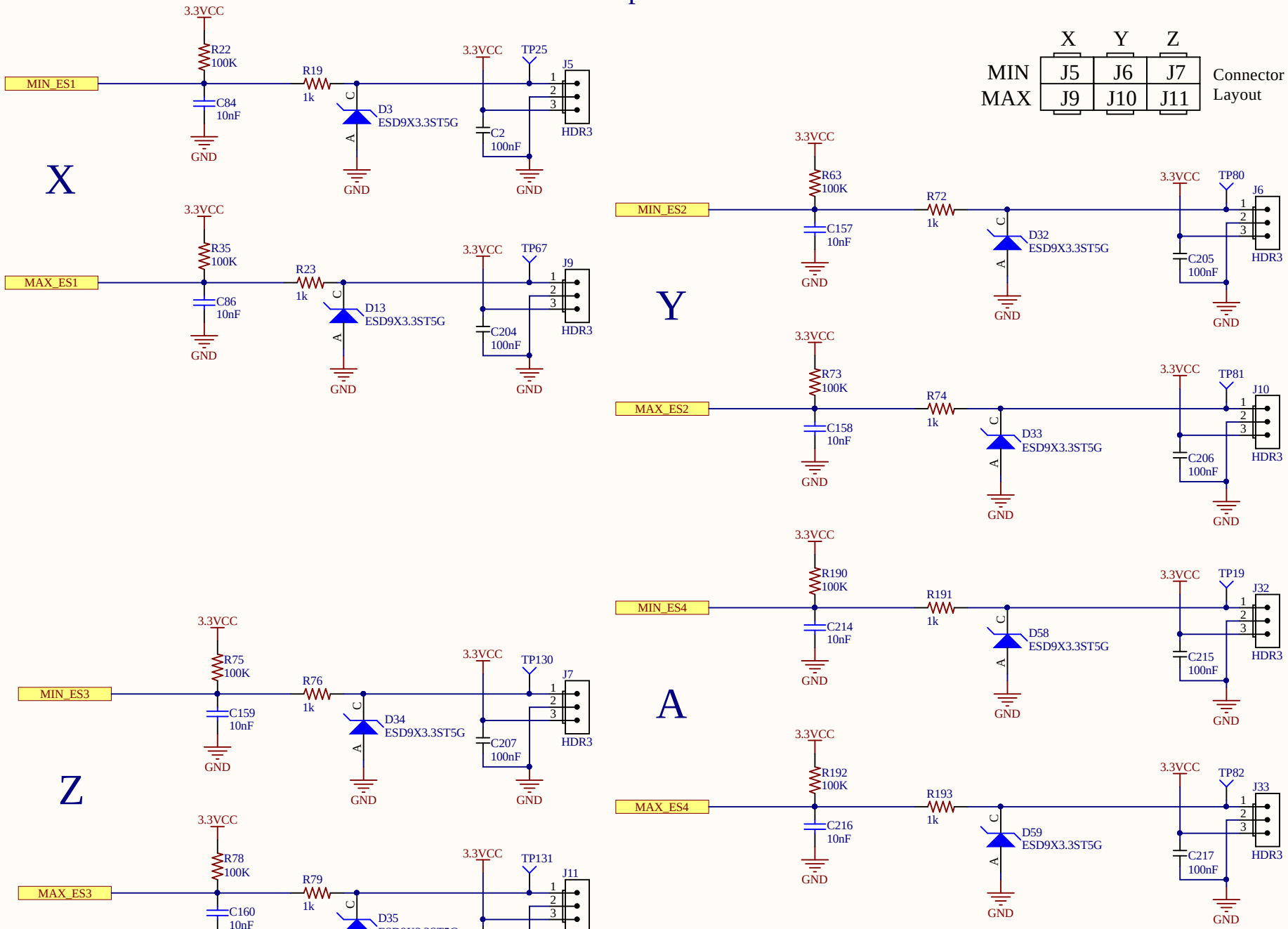

Title	Archimajor 0.1b Endstops	
Size: Letter	Number: .	Revision: a
Date: 3/4/2019		Sheet 4 1of
File: C:\Users\..\EndStops.SchDoc		Drawn By: UltiMachine

Motor

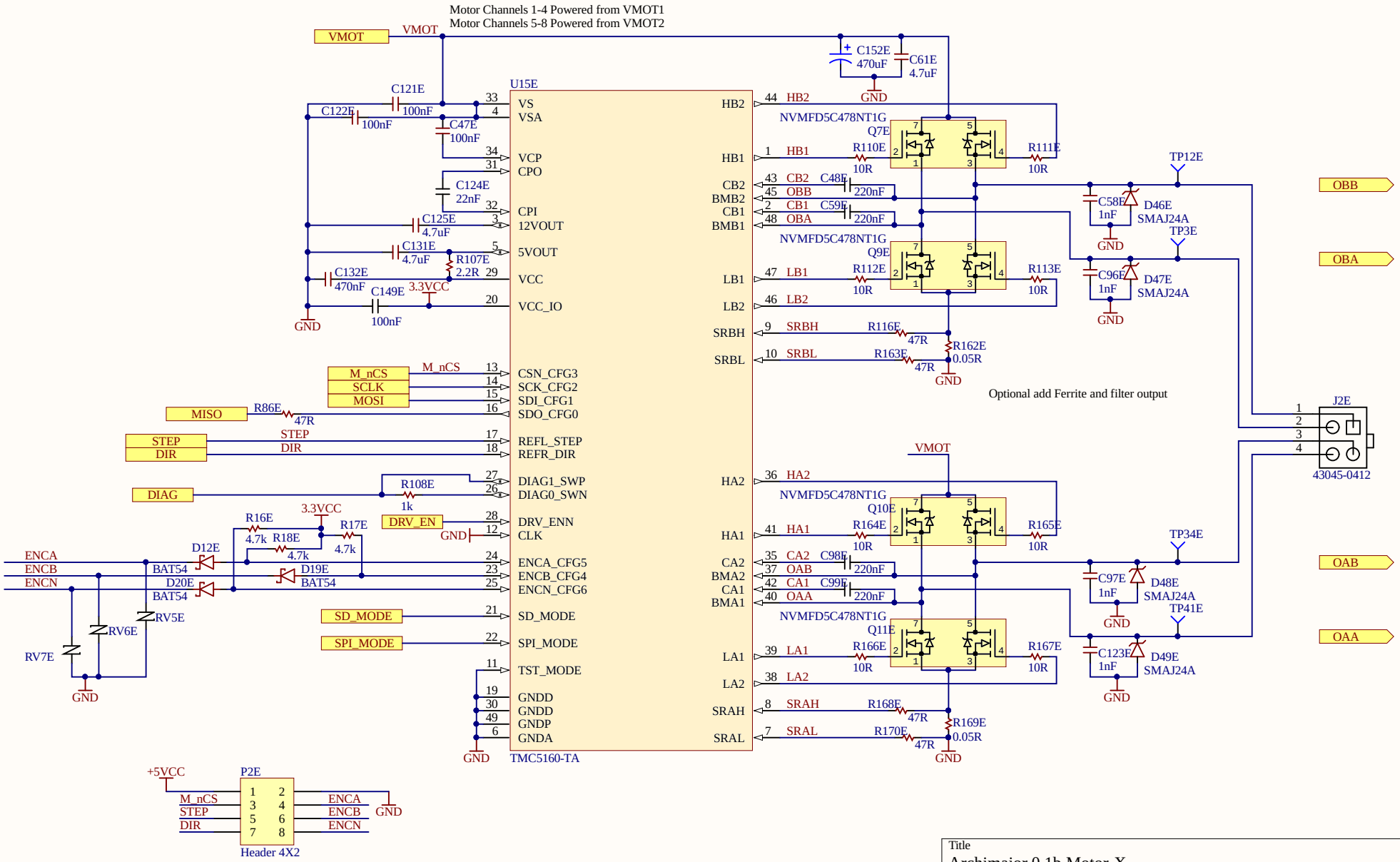

Title		
Archimajor 0.1b Motor-X		
Size: Letter	Number: .	Revision: a
Date: 3/4/2019	Sheet 5 1of	
File: C:\Users\..\Motors.SchDoc	Drawn By: UltiMachine	

Motor

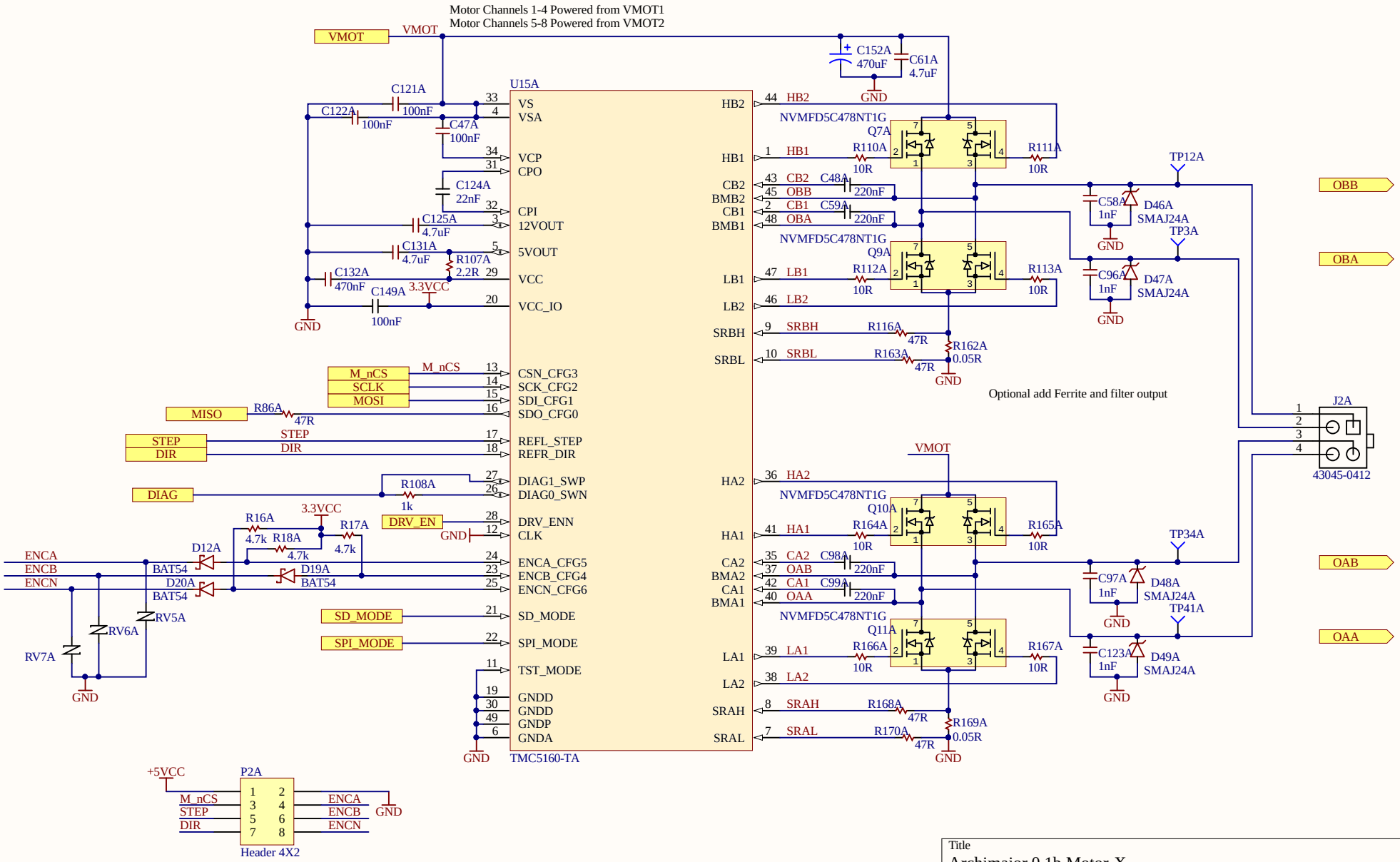

Title		
Archimajor 0.1b Motor-X		
Size: Letter	Number: .	Revision: a
Date: 3/4/2019	Sheet 5 1of	
File: C:\Users\..\Motors.SchDoc	Drawn By: UltiMachine	

Motor

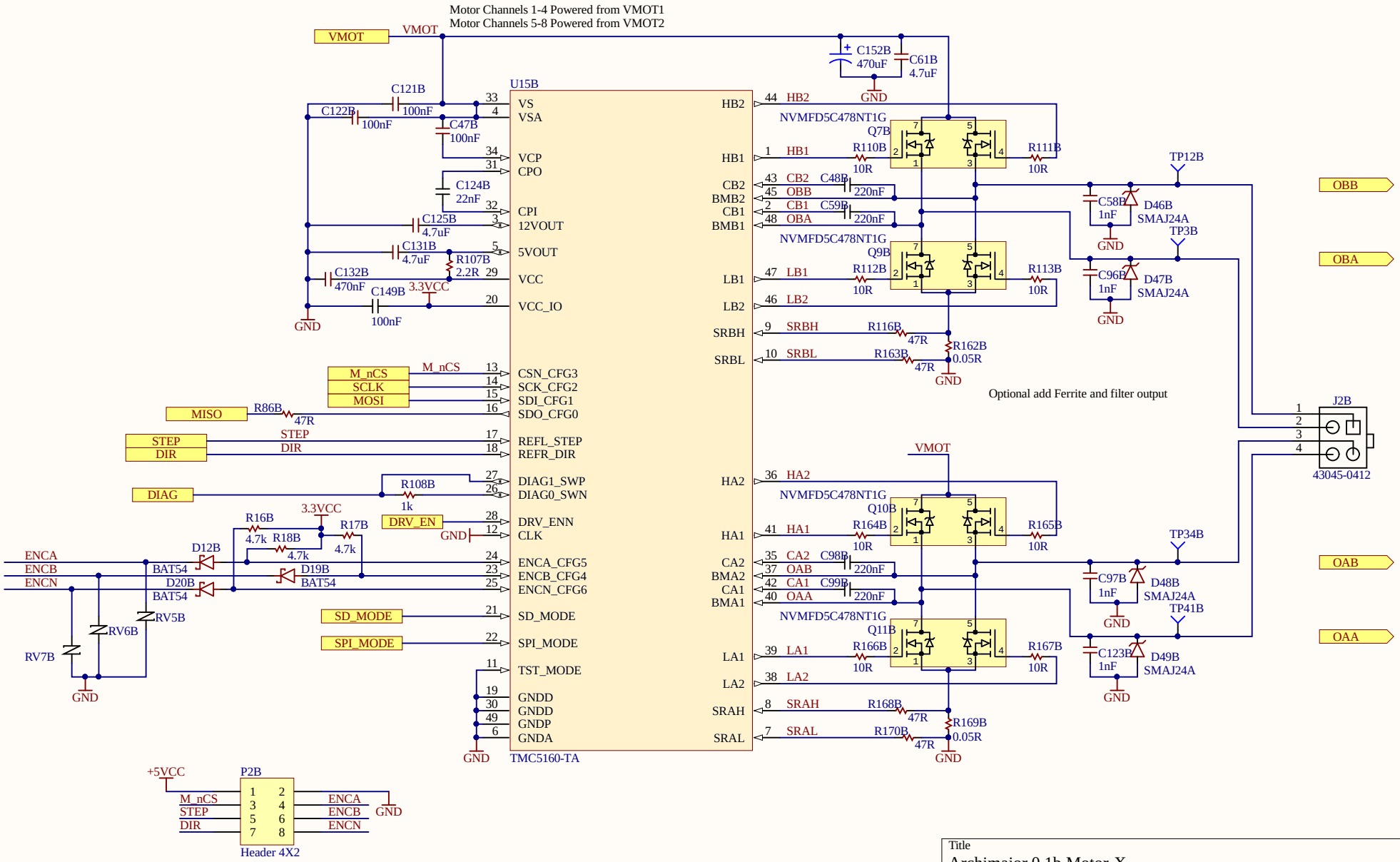

Title		
Archimajor 0.1b Motor-X		
Size: Letter	Number: .	Revision: a
Date: 3/4/2019	Sheet 5 1of	
File: C:\Users\..\Motors.SchDoc	Drawn By: UltiMachine	

Motor

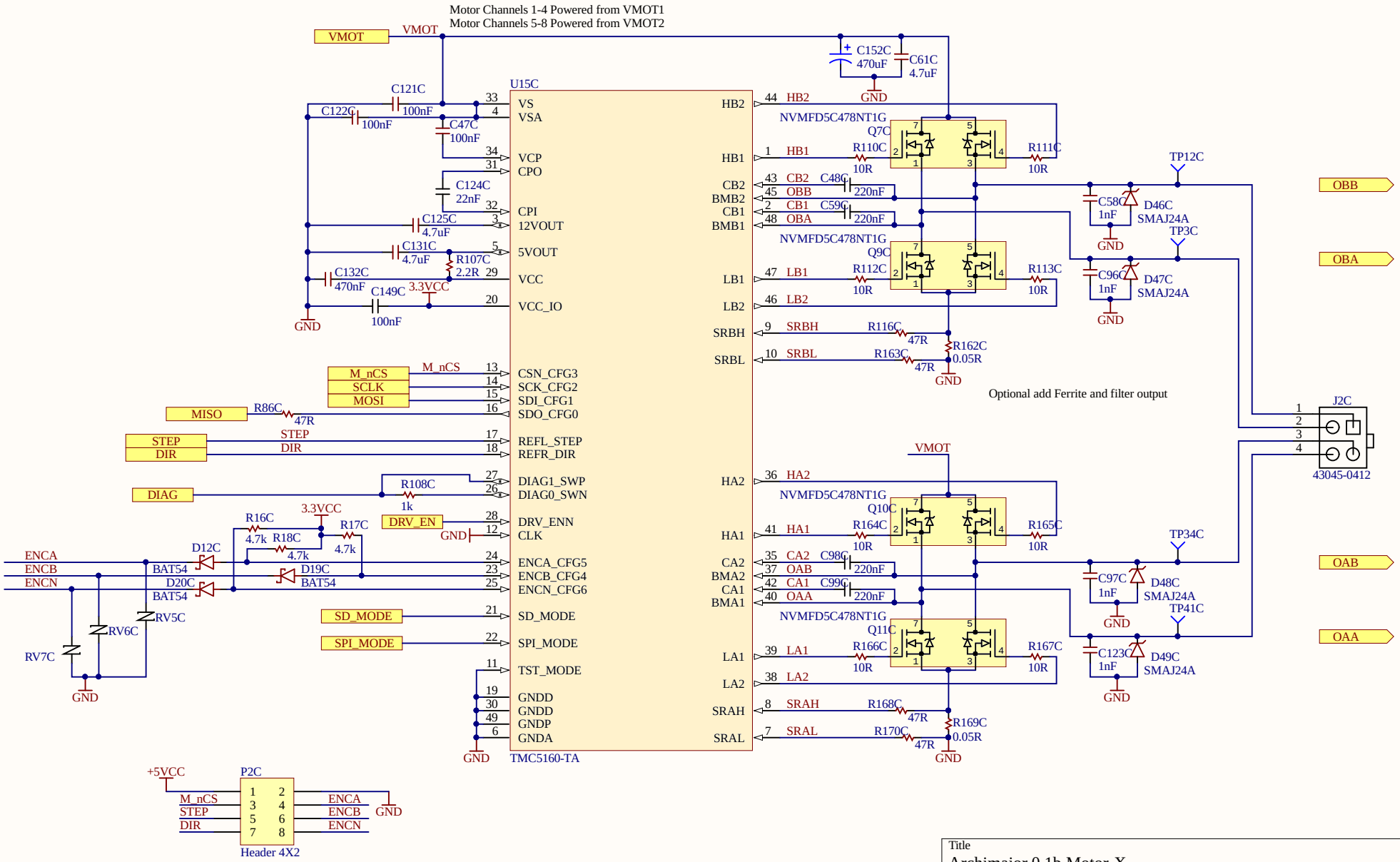

Title		
Archimajor 0.1b Motor-X		
Size: Letter	Number: .	Revision: a
Date: 3/4/2019	Sheet 5 1of	
File: C:\Users\..\Motors.SchDoc	Drawn By: UltiMachine	

Motor

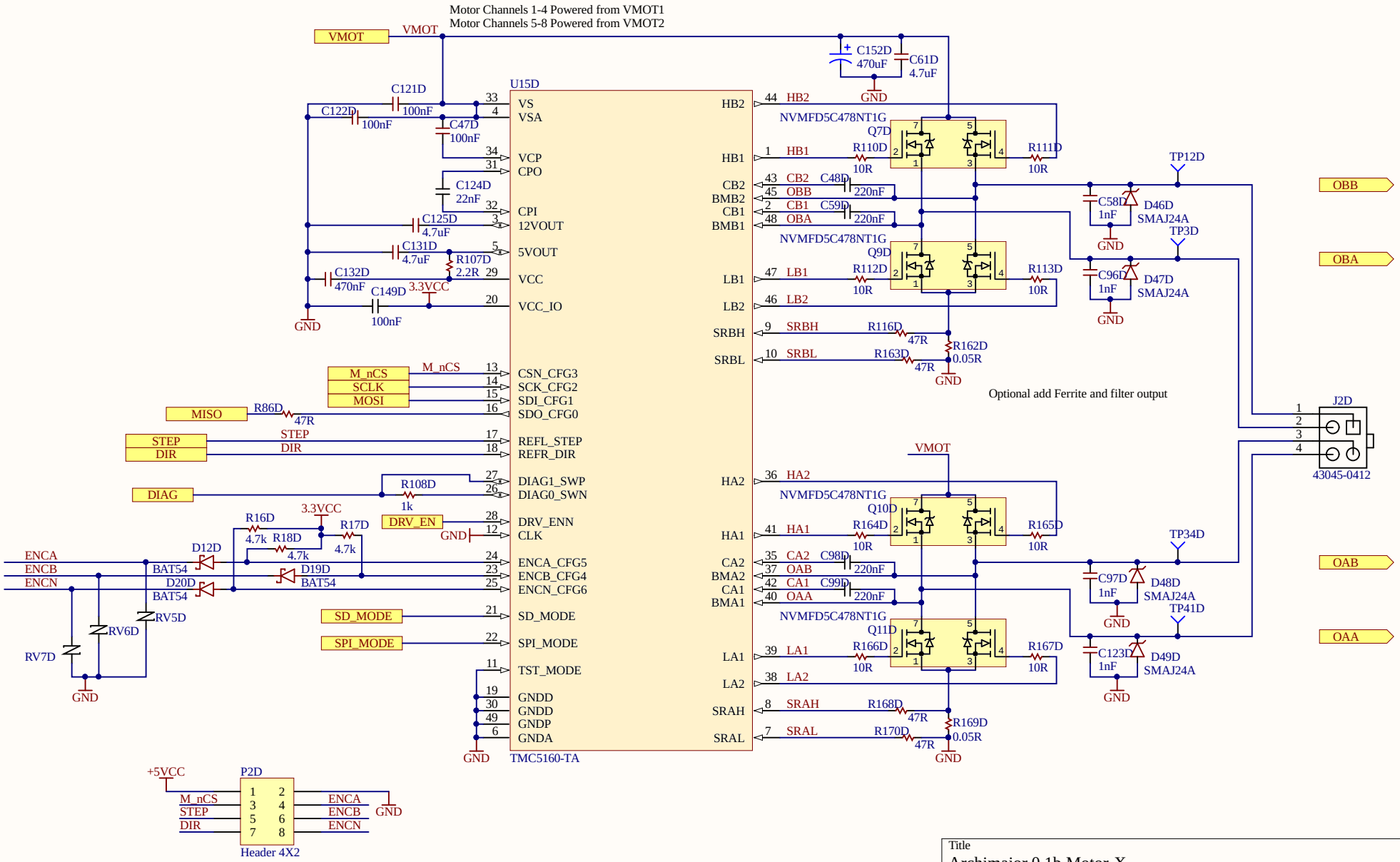

Title		
Archimajor 0.1b Motor-X		
Size: Letter	Number: .	Revision: a
Date: 3/4/2019	Sheet 5 1of	
File: C:\Users\..\Motors.SchDoc	Drawn By: UltiMachine	

Motor

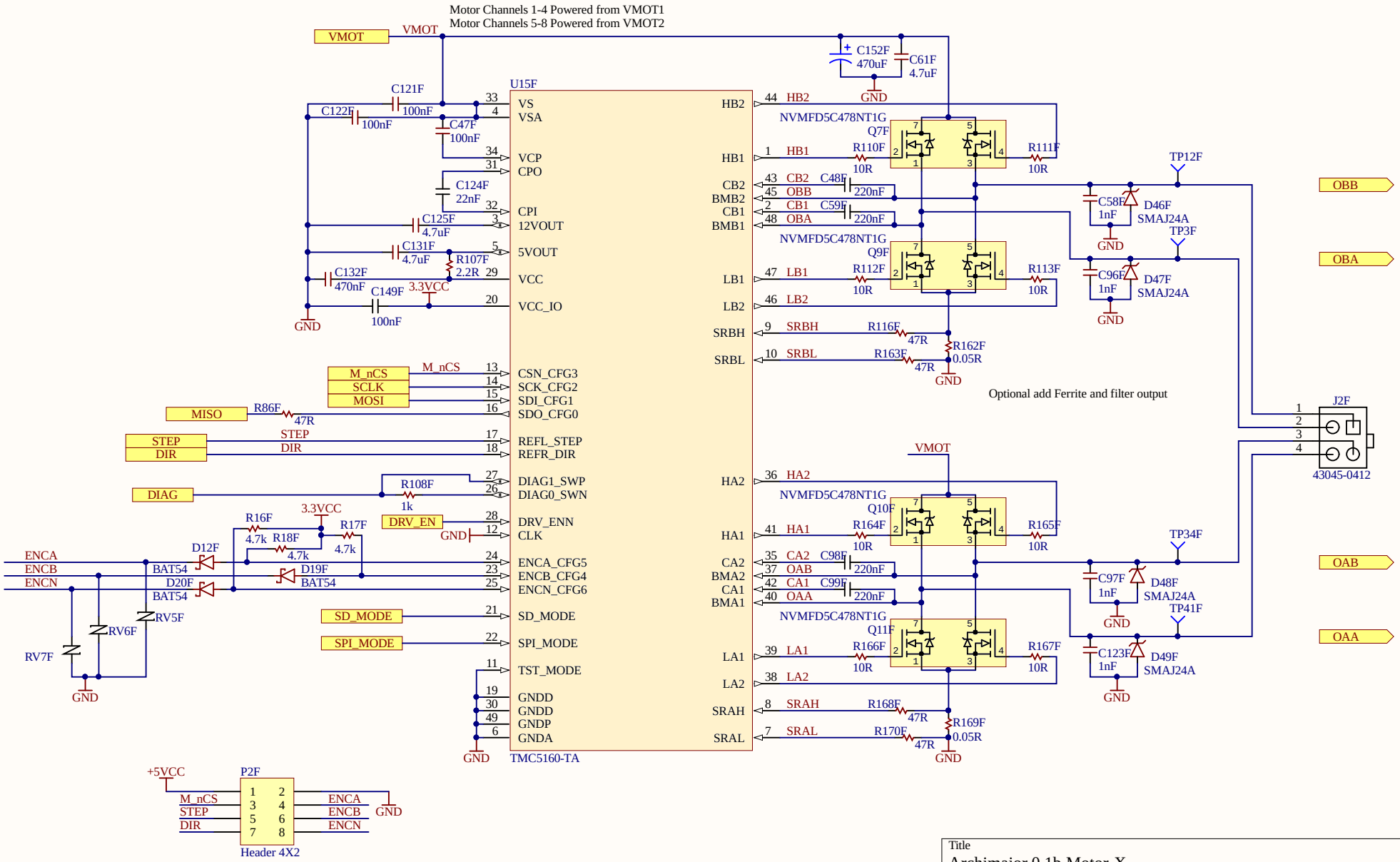

Title		
Archimajor 0.1b Motor-X		
Size: Letter	Number: .	Revision: a
Date: 3/4/2019		Sheet 5 1of
File: C:\Users\..\Motors.SchDoc		Drawn By: UltiMachine

Motor

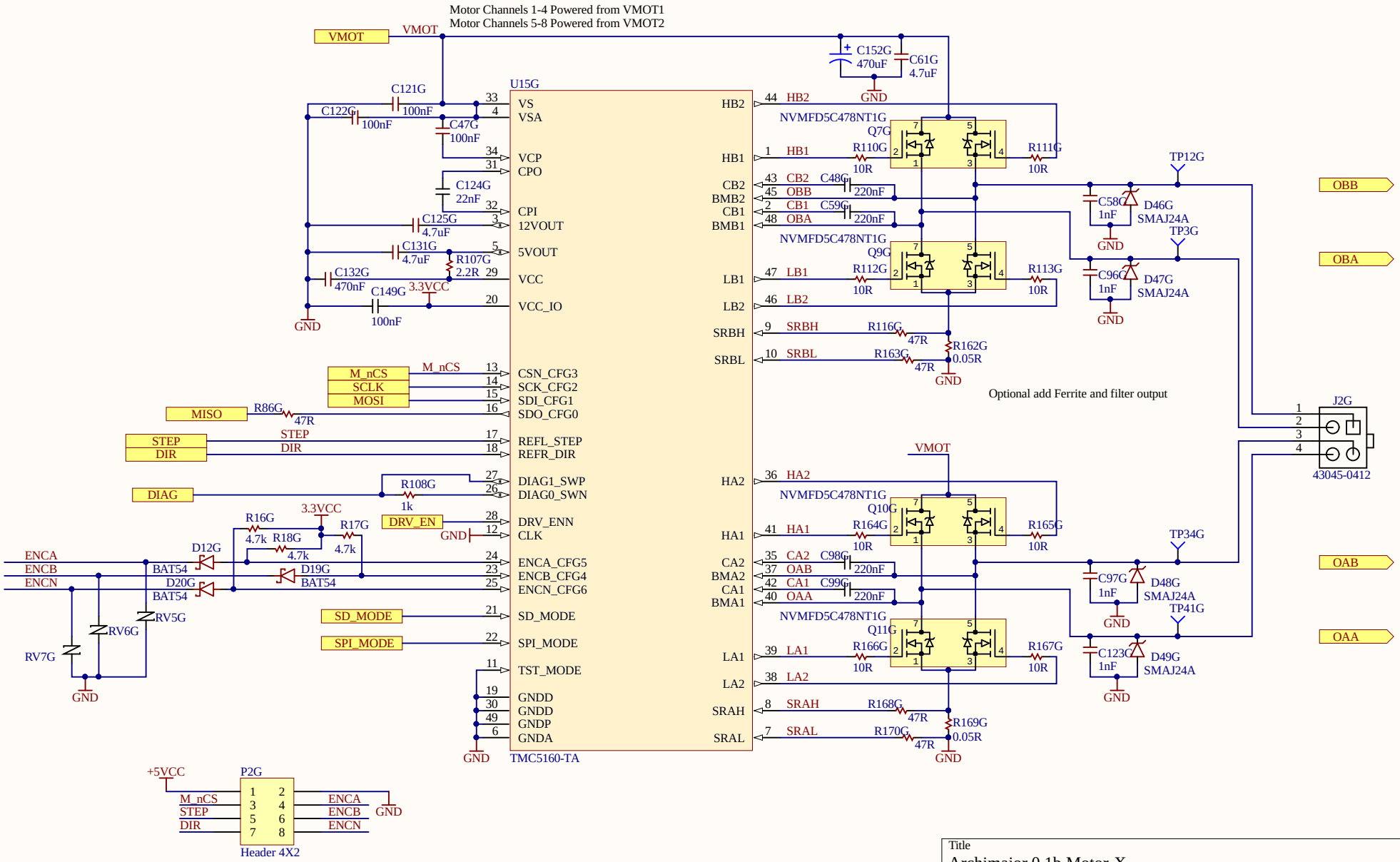

Title		
Archimajor 0.1b Motor-X		
Size: Letter	Number: .	Revision: a
Date: 3/4/2019		Sheet 5 1of
File: C:\Users\..\Motors.SchDoc		Drawn By: UltiMachine

Motor

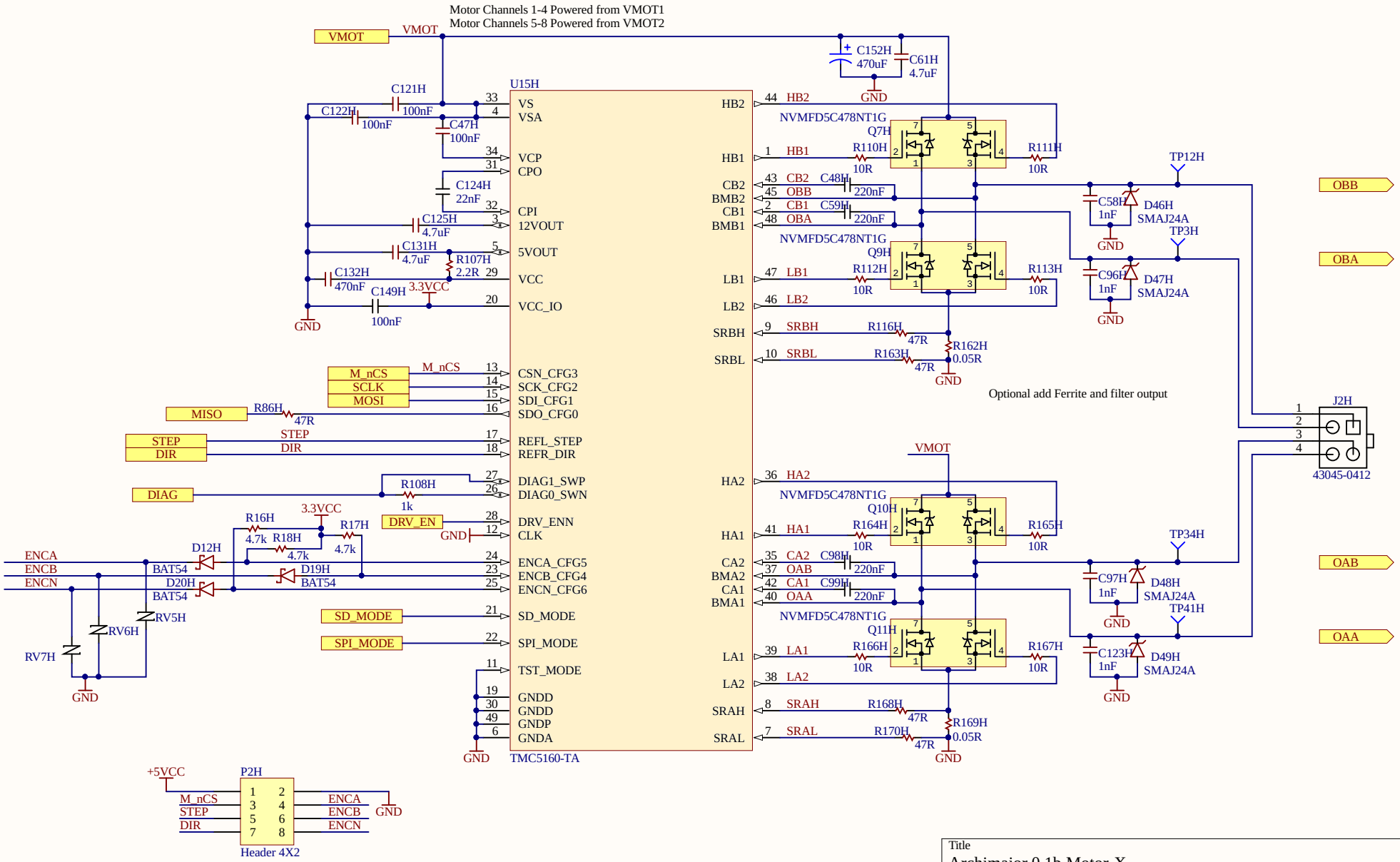

Title		
Archimajor 0.1b Motor-X		
Size: Letter	Number: .	Revision: a
Date: 3/4/2019	Sheet 5 1of	
File: C:\Users\..\Motors.SchDoc	Drawn By: UltiMachine	

Thermistor Channels

Thermistor Connector Layout

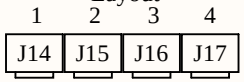

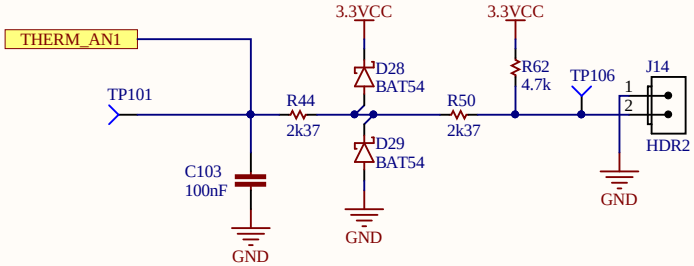

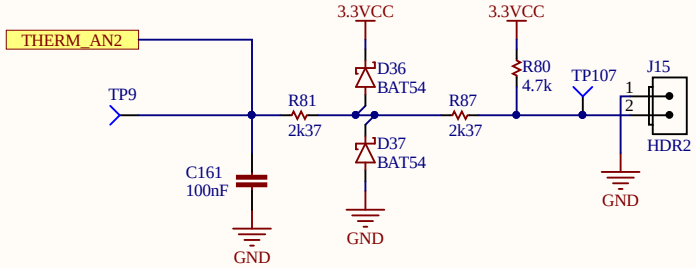

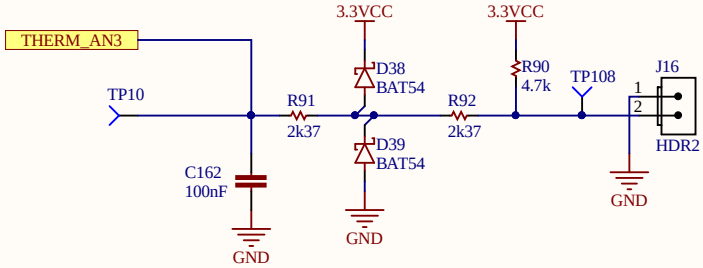

Title		
Archimajor 0.1b Thermistors		
Size: Letter	Number: .	Revision: a
Date: 3/4/2019	Sheet 10 11of	
File: C:\Users\..\Thermistors.SchDoc	Drawn By: UltiMachine	

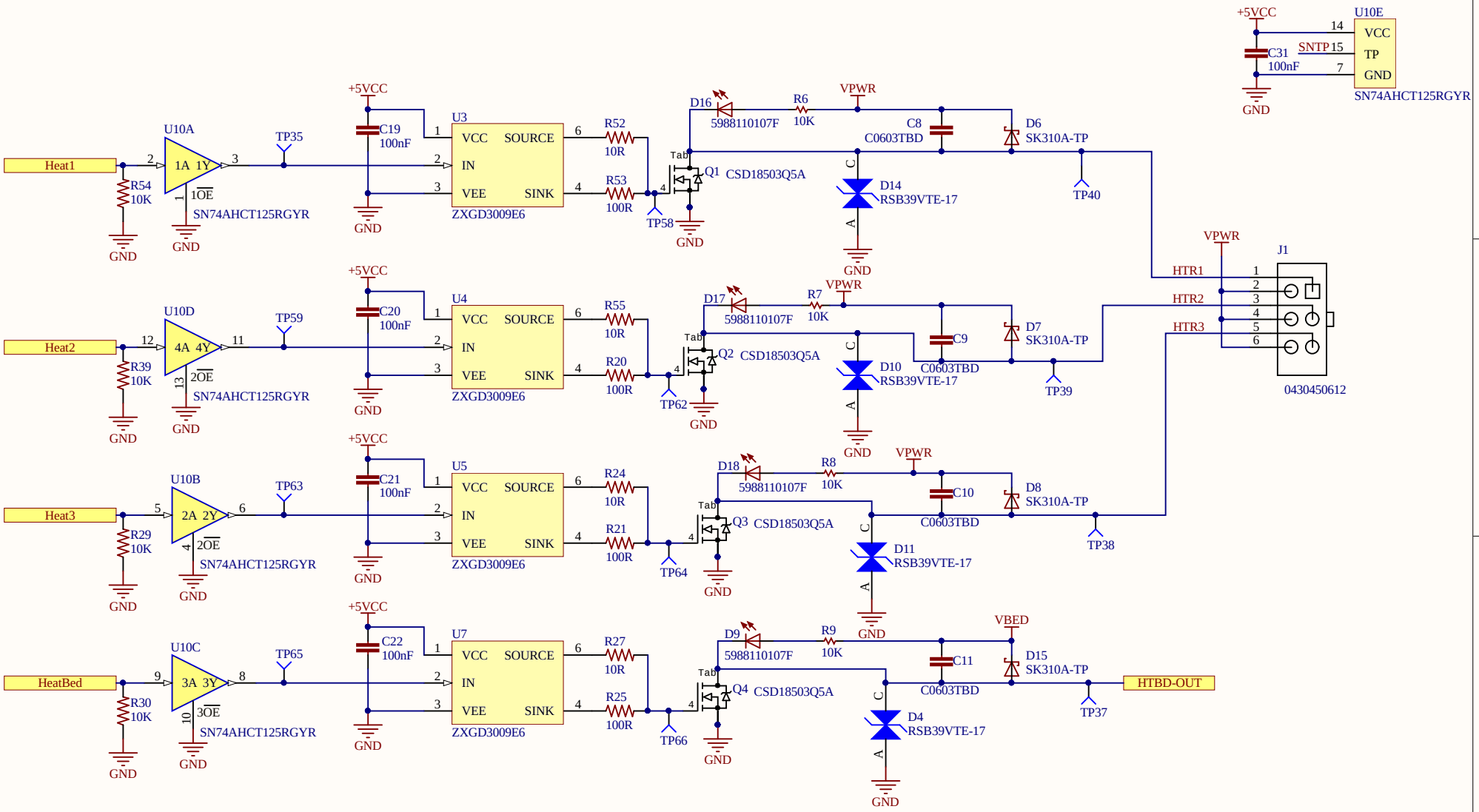

Title		
Archimajor 0.1b Mosfets		
Size: Letter	Number: .	Revision: a
Date: 3/4/2019	Sheet 11 of11	
File: C:\Users\..\Mosfets.SchDoc	Drawn By: UltiMachine	

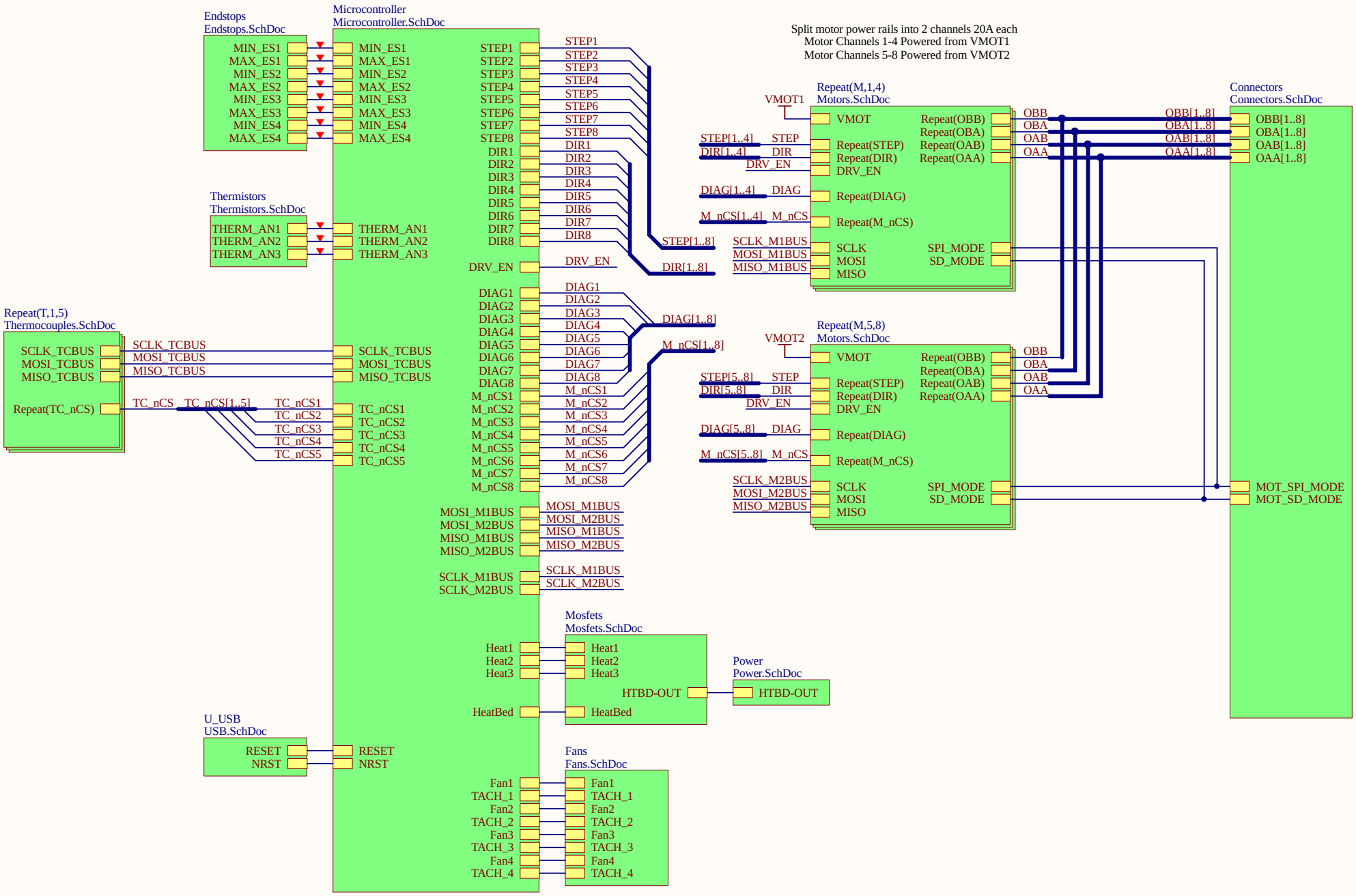

Project: Archimajor	Ver: 0.1b
Title: *	File: Archimajor.SchDoc
Drawn by: UltiMachine	Sheet: * of *

Connectors

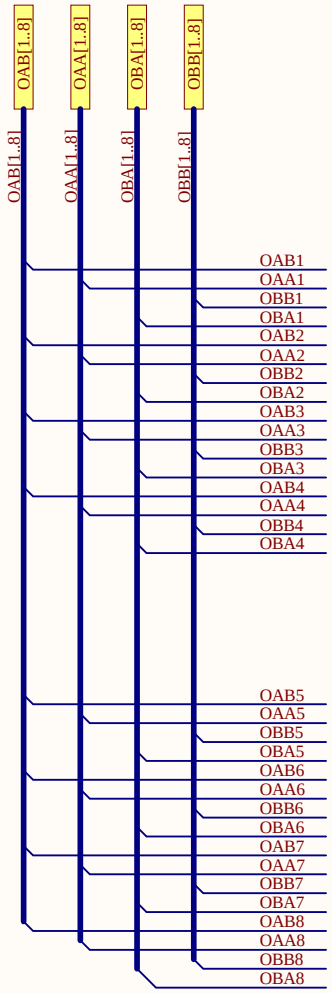

Motor 1

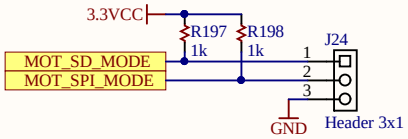

Project: Archimajor	Ver: 0.1b
Title: *	File: Connectors.SchDoc
Drawn by: UltiMachine	Sheet: * of *

Fans

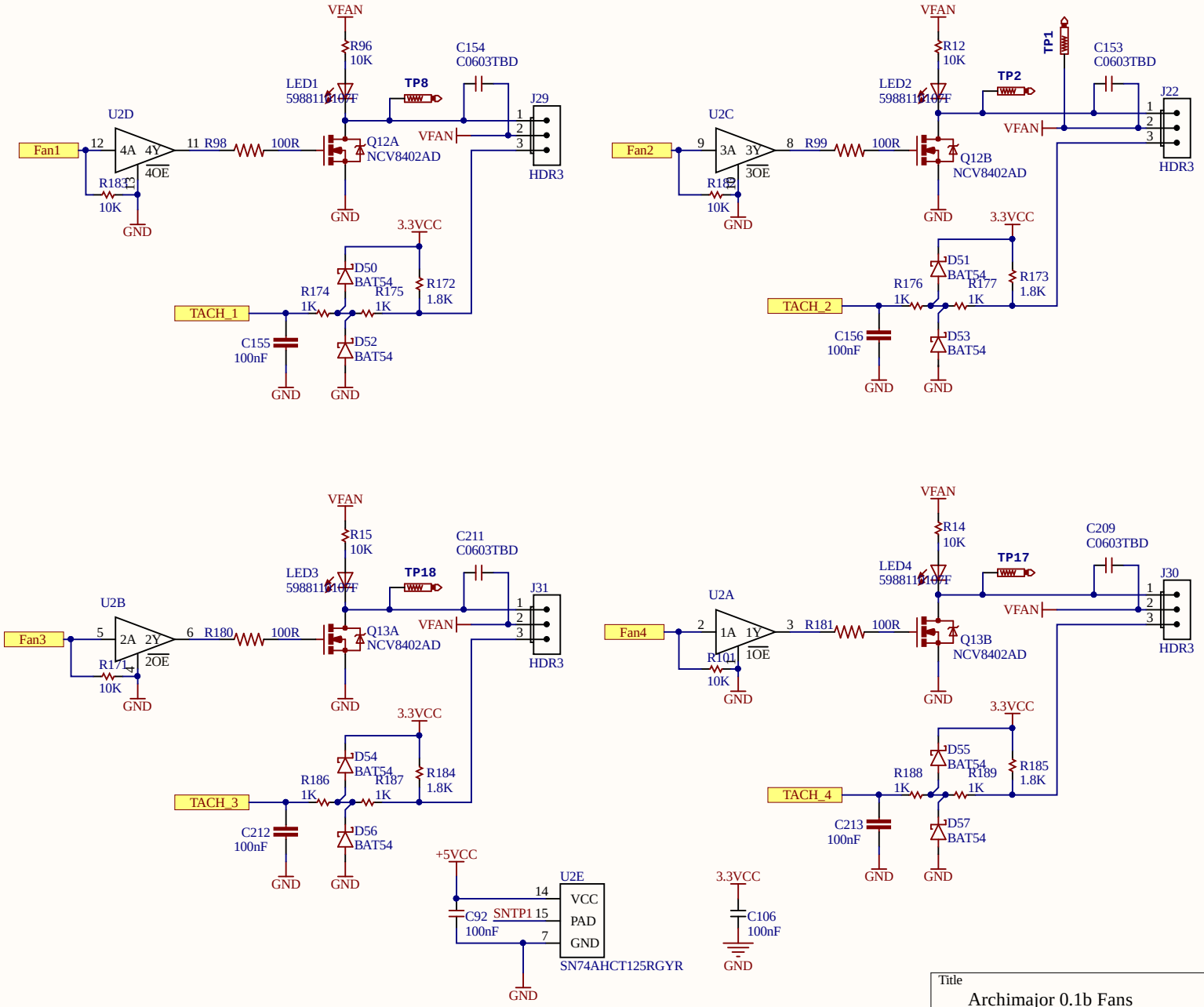

Title		
Archimajor 0.1b Fans		
Size: Letter	Number	Revision
Date: 3/4/2019	Sheet of	
File: C:\Users\..\Fans.SchDoc	Drawn By:	