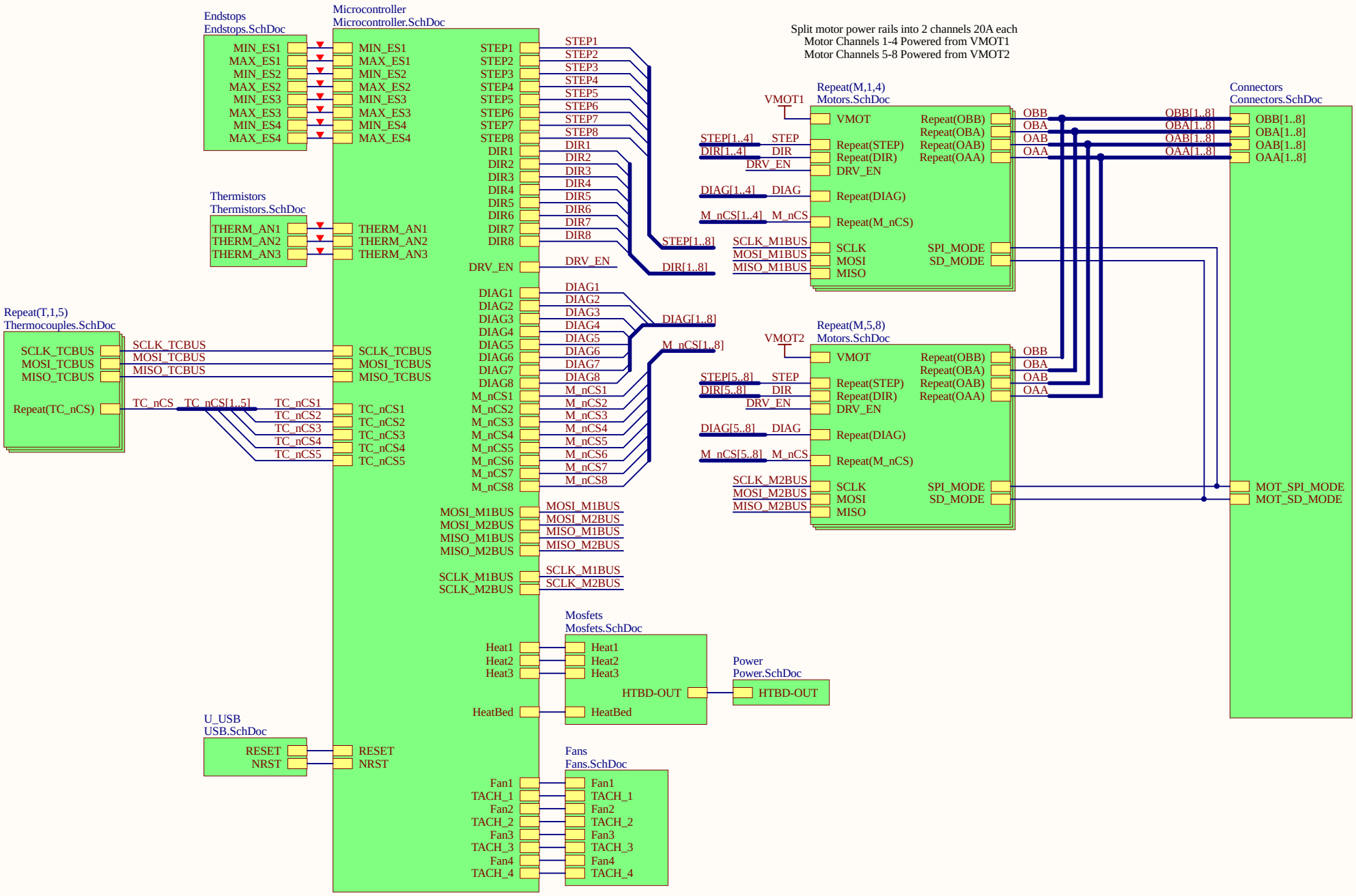

Project: Archimajor	Ver: 0.2a
Title: Blocks	File: Archimajor.SchDoc
Drawn by: UltiMachine	Sheet: 1 of 11

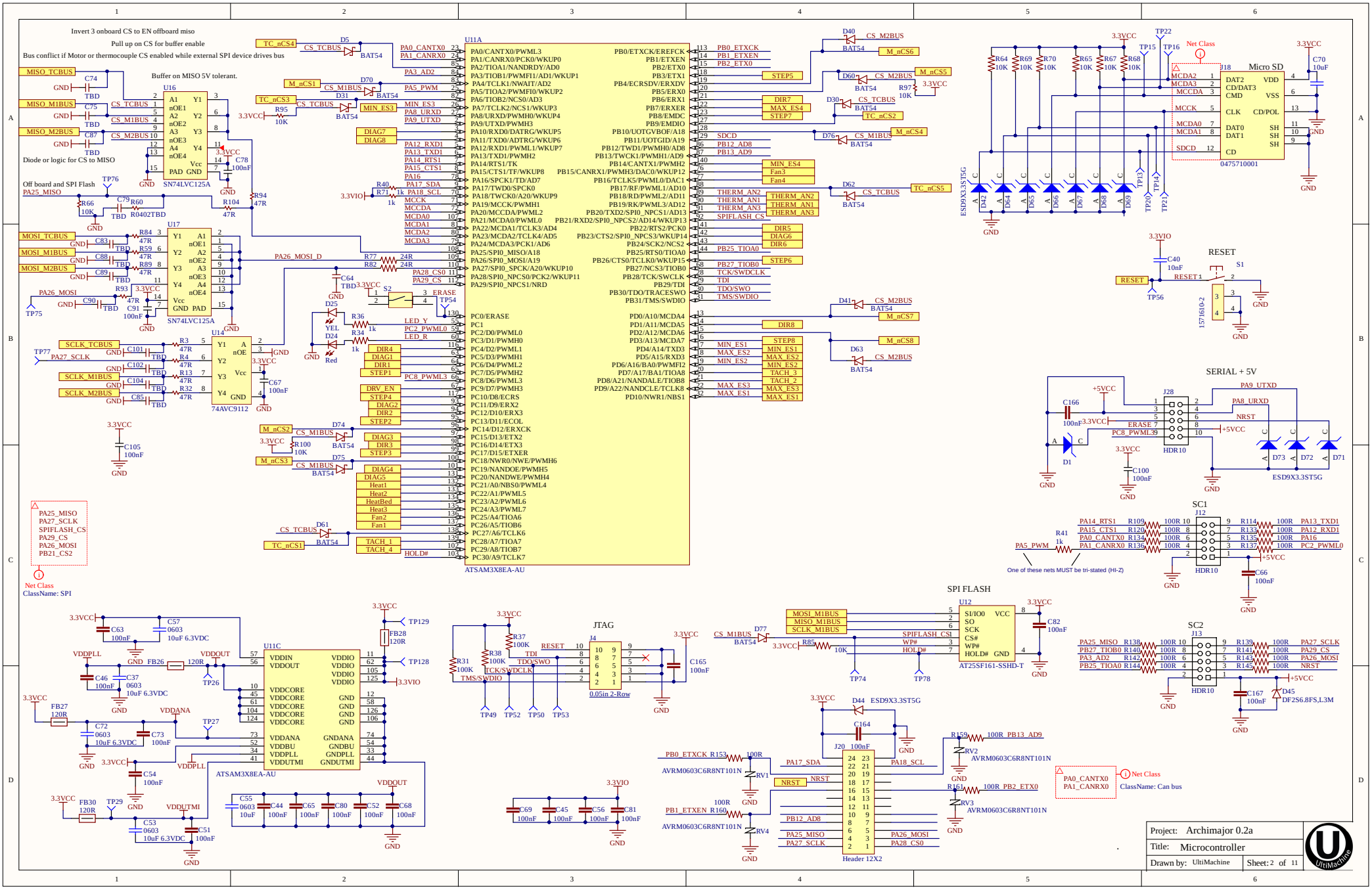
Invert 3 onboard CS to EN offboard miso
Pull up on CS for buffer enable
Bus conflict if Motor or thermocouple CS enabled while external SPI device drives bus
Buffer on MISO 5V tolerant.
Diode or logic for CS to MISO
Off board and SPI Flash
U11A
ATSAM3X8EA-AU
U16
SN74LVC125A
U17
SN74LVC125A
U14
74AVC9112
U11C
ATSAM3X8EA-AU
Micro SD
0475710001
RESET
SERIAL + 5V
SC1
SC2
SPI FLASH
U12
AT25SF161-SSHD-T
JTAG
J4
0.05in 2-Row
J20
Header 12X2
Net Class
ClassName: SPI
Net Class
ClassName: Can bus
One of these nets MUST be tri-stated (Hi-Z)
Project: Archimajor 0.2a
Title: Microcontroller
Drawn by: UltiMachine
Sheet: 2 of 11

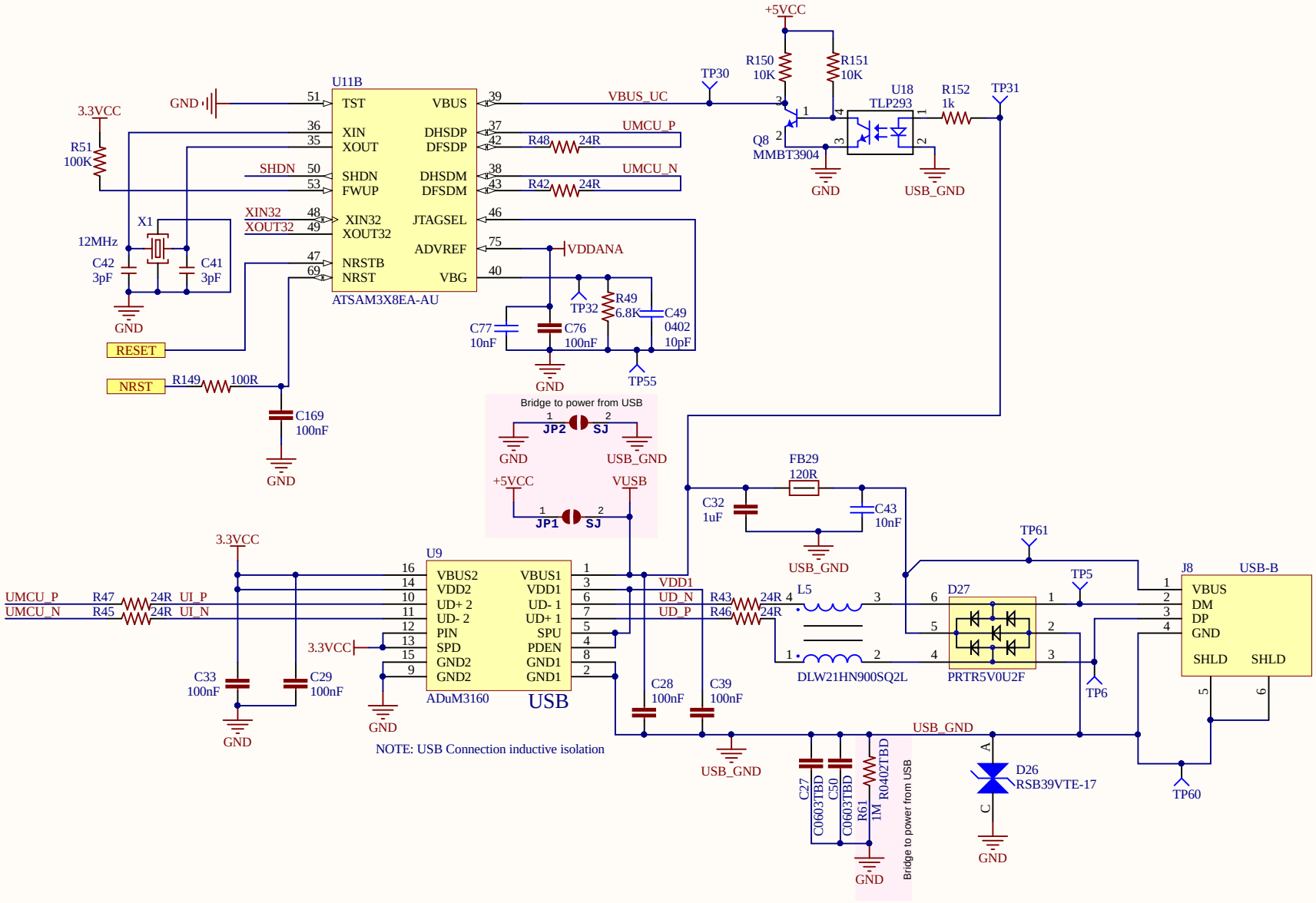

Project: Archimajor	Ver: 0.2a
Title: USB	File: USB.SchDoc
Drawn by: UltiMachine	Sheet: 3 of 11

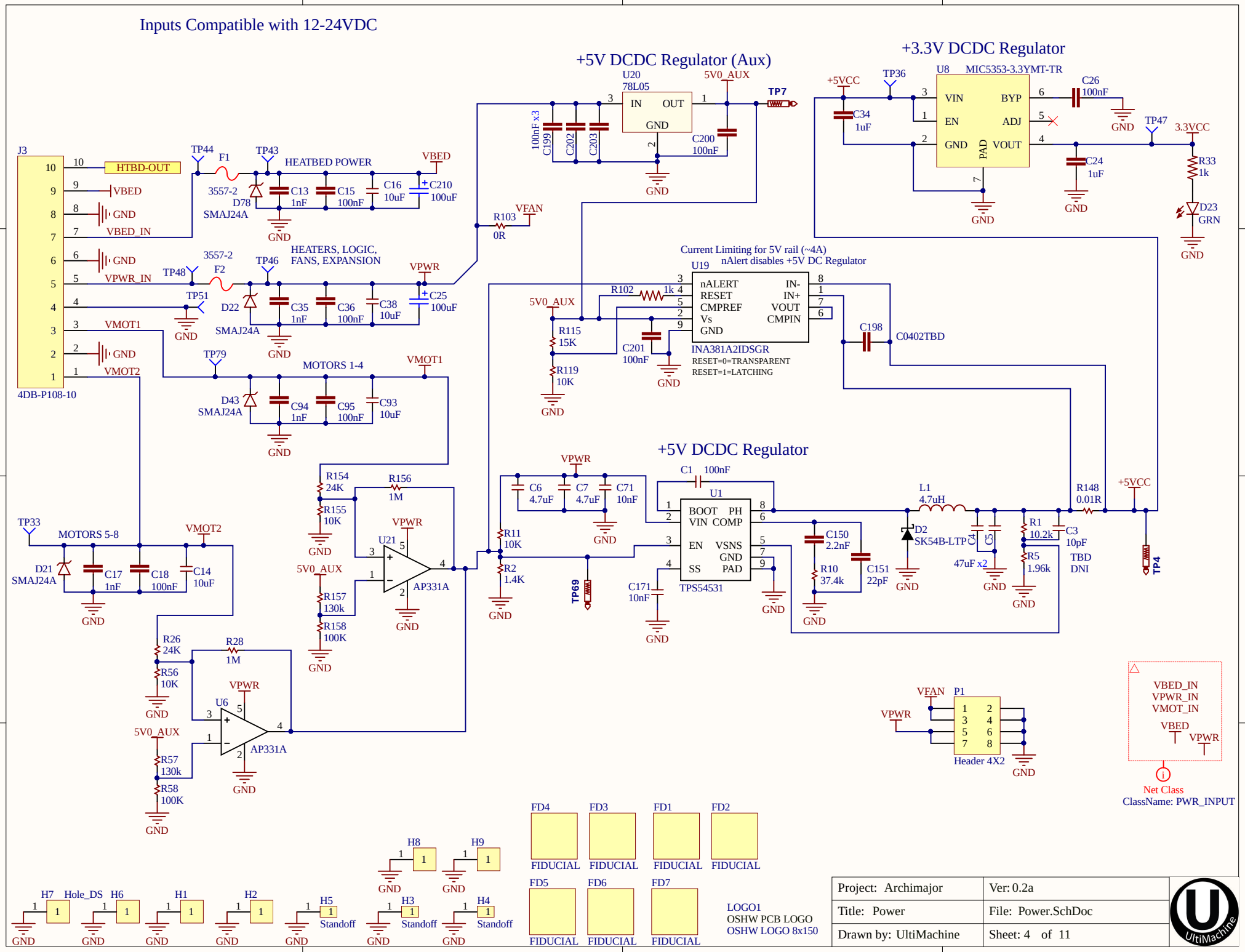
Inputs Compatible with 12-24VDC
+5V DCDC Regulator (Aux)
U20
78L05
IN
OUT
GND
5V0_AUX
TP7
C199
C202
C203
100nF x3
C200
100nF
+3.3V DCDC Regulator
U8
MIC5353-3.3YMT-TR
VIN
EN
GND
PAD
BYP
ADJ
VOUT
+5VCC
TP36
C34
1uF
C26
100nF
TP47
3.3VCC
C24
1uF
R33
1k
D23
GRN
J3
4DB-P108-10
HTBD-OUT
VBED
GND
VBED_IN
VPWR_IN
VMOT1
VMOT2
TP44
F1
TP43
HEATBED POWER
3557-2
D78
SMAJ24A
C13
1nF
C15
100nF
C16
10uF
C210
100uF
R103
0R
VFAN
TP48
F2
TP46
HEATERS, LOGIC,
FANS, EXPANSION
D22
C35
1nF
C36
100nF
C38
10uF
C25
100uF
TP51
TP79
MOTORS 1-4
D43
C94
1nF
C95
100nF
C93
10uF
Current Limiting for 5V rail (~4A)
nAlert disables +5V DC Regulator
U19
nALERT
RESET
CMPREF
Vs
GND
IN-
IN+
VOUT
CMPIN
INA381A2IDSGR
RESET=0=TRANSPARENT
RESET=1=LATCHING
R102
1k
R115
15K
R119
10K
C201
100nF
C198
C0402TBD
+5V DCDC Regulator
C1
100nF
U1
BOOT
VIN
EN
SS
PH
COMP
VSNS
GND
PAD
TPS54531
C6
4.7uF
C7
4.7uF
C71
10nF
R11
10K
R2
1.4K
TP69
C171
10nF
C150
2.2nF
R10
37.4k
C151
22pF
L1
4.7uH
D2
SK54B-LTP
C4
C5
47uF x2
R1
10.2k
R5
1.96k
C3
10pF
TBD
DNI
R148
0.01R
+5VCC
TP4
TP33
MOTORS 5-8
D21
SMAJ24A
C17
1nF
C18
100nF
C14
10uF
R154
24K
R155
10K
R156
1M
U21
AP331A
R157
130k
R158
100K
R26
24K
R56
10K
R28
1M
U6
AP331A
R57
130k
R58
100K
VFAN
P1
VPWR
Header 4X2
VBED_IN
VPWR_IN
VMOT_IN
VBED
VPWR
Net Class
ClassName: PWR_INPUT
FD4
FD3
FD1
FD2
FD5
FD6
FD7
FIDUCIAL
H8
H9
H7
Hole_DS
H6
H1
H2
H5
H3
H4
Standoff
LOGO1
OSHW PCB LOGO
OSHW LOGO 8x150
Project: Archimajor
Ver: 0.2a
Title: Power
File: Power.SchDoc
Drawn by: UltiMachine
Sheet: 4 of 11
UltiMachine

Motor

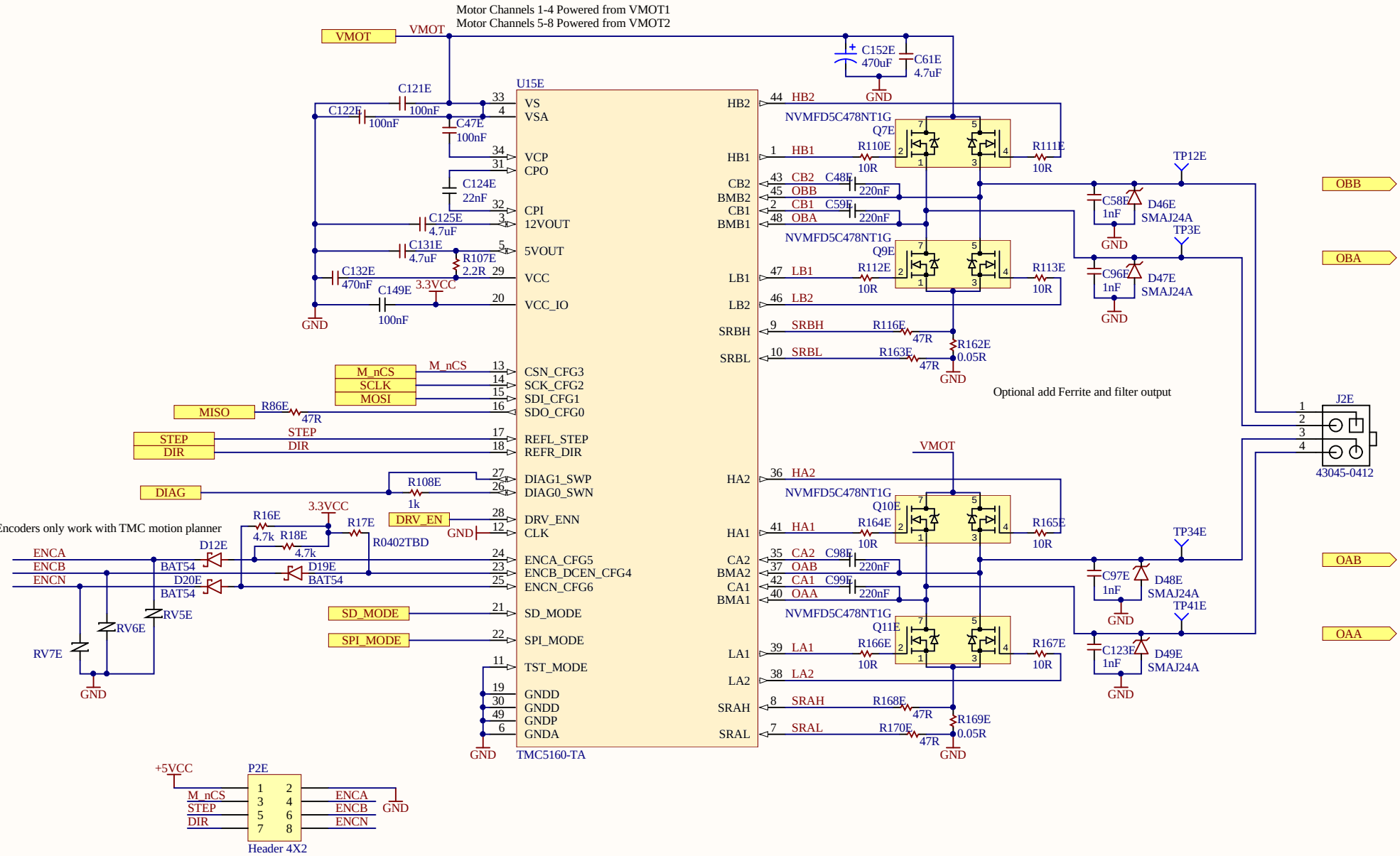

Project: Archimajor	Ver: 0.2a
Title: Motors	File: Motors.SchDoc
Drawn by: UltiMachine	Sheet: 5 of 11

Motor

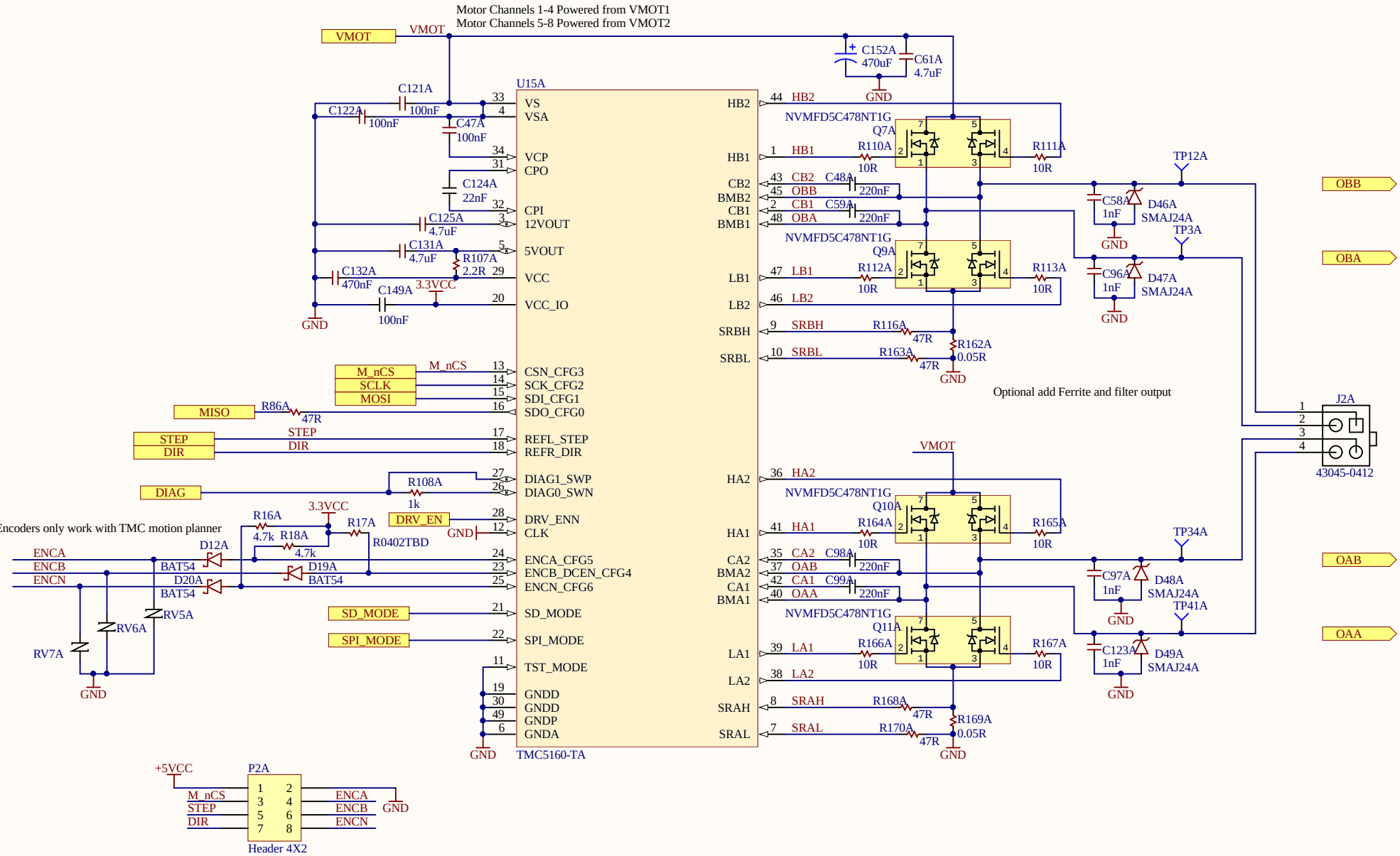

Project: Archimajor	Ver: 0.2a
Title: Motors	File: Motors.SchDoc
Drawn by: UltiMachine	Sheet: 5 of 11

Motor

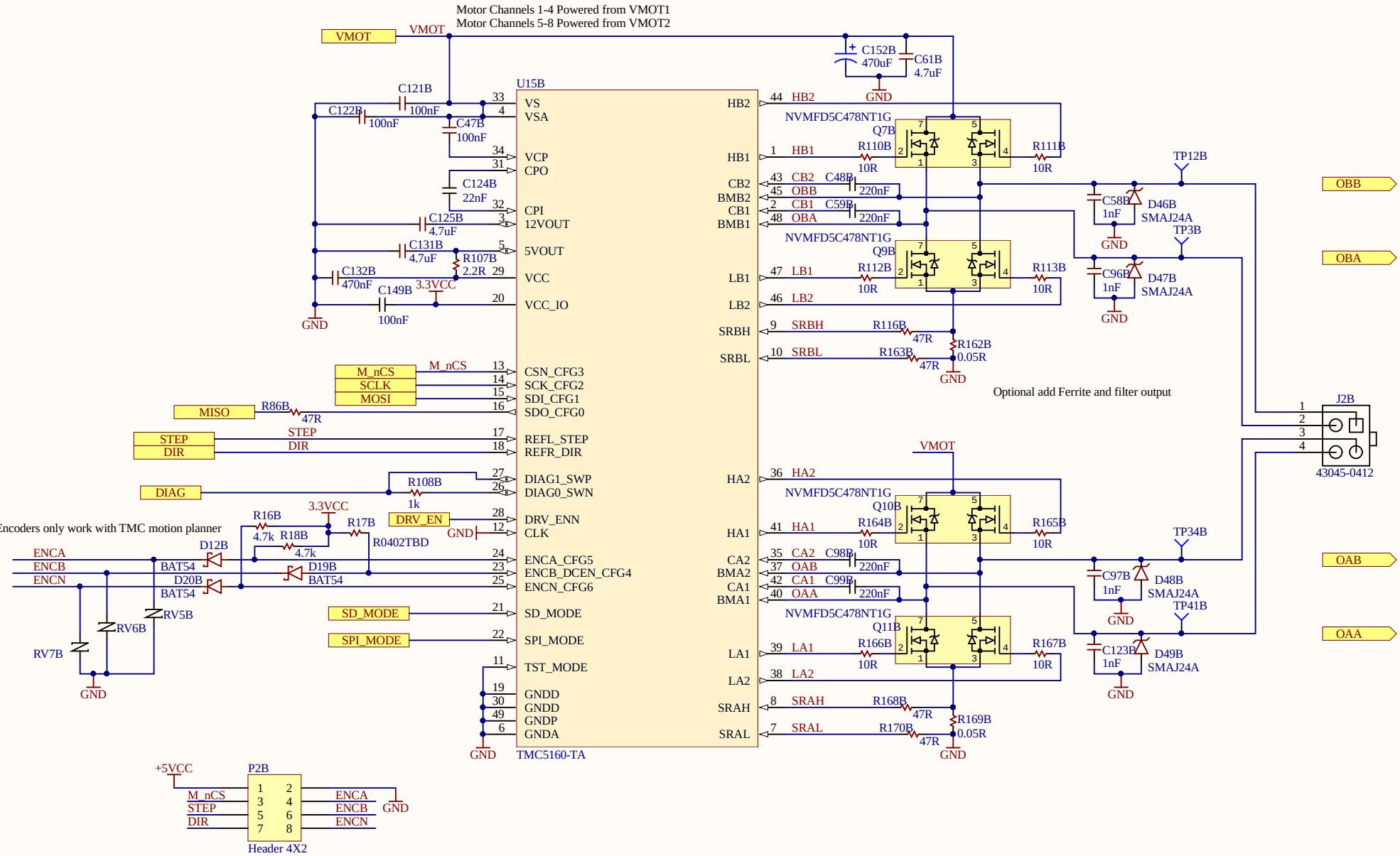

Project: Archimajor	Ver: 0.2a
Title: Motors	File: Motors.SchDoc
Drawn by: UltiMachine	Sheet: 5 of 11

Motor

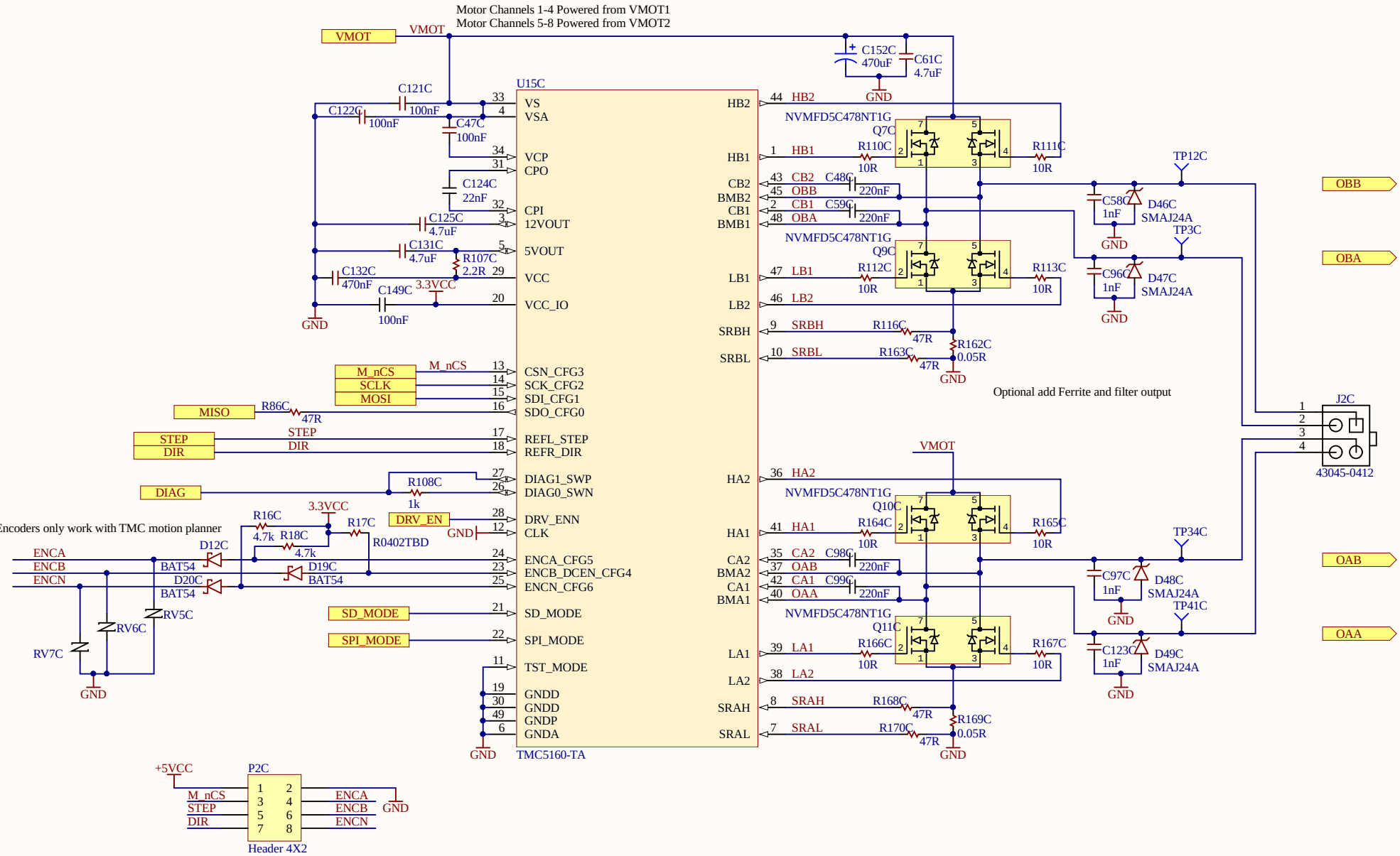

Project: Archimajor	Ver: 0.2a
Title: Motors	File: Motors.SchDoc
Drawn by: UltiMachine	Sheet: 5 of 11

Motor

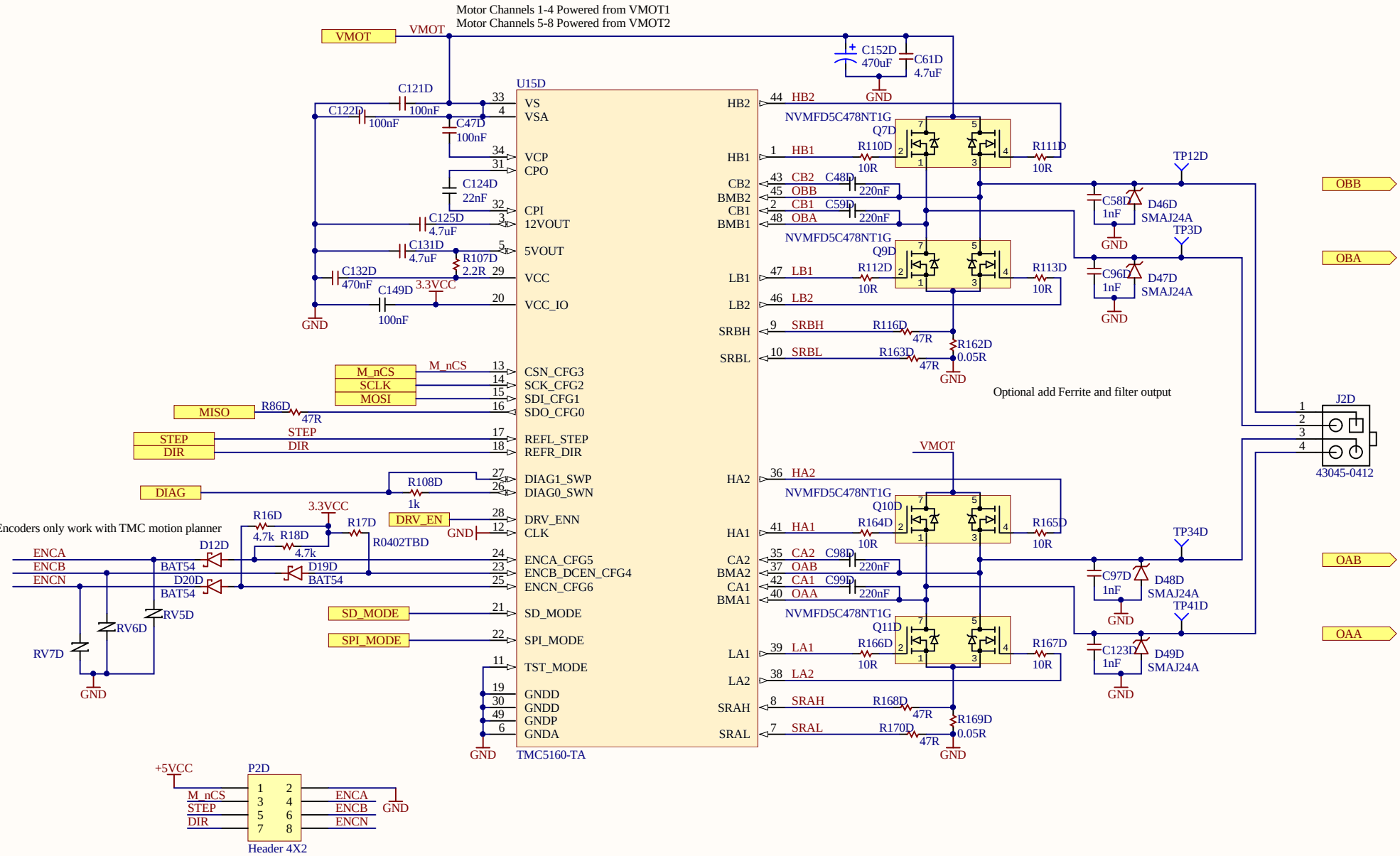

Project: Archimajor	Ver: 0.2a
Title: Motors	File: Motors.SchDoc
Drawn by: UltiMachine	Sheet: 5 of 11

Motor

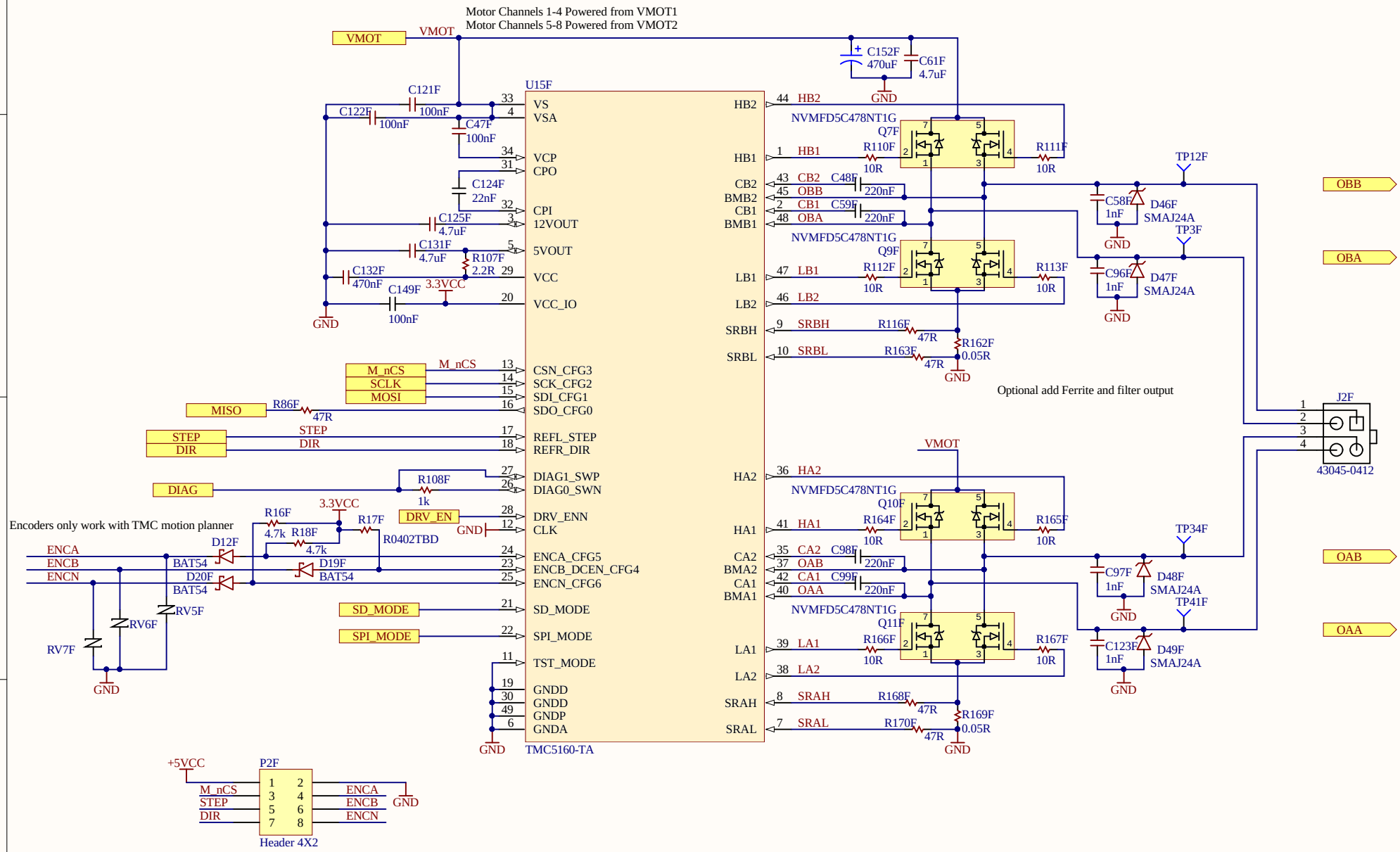

Project: Archimajor	Ver: 0.2a
Title: Motors	File: Motors.SchDoc
Drawn by: UltiMachine	Sheet: 5 of 11

Motor

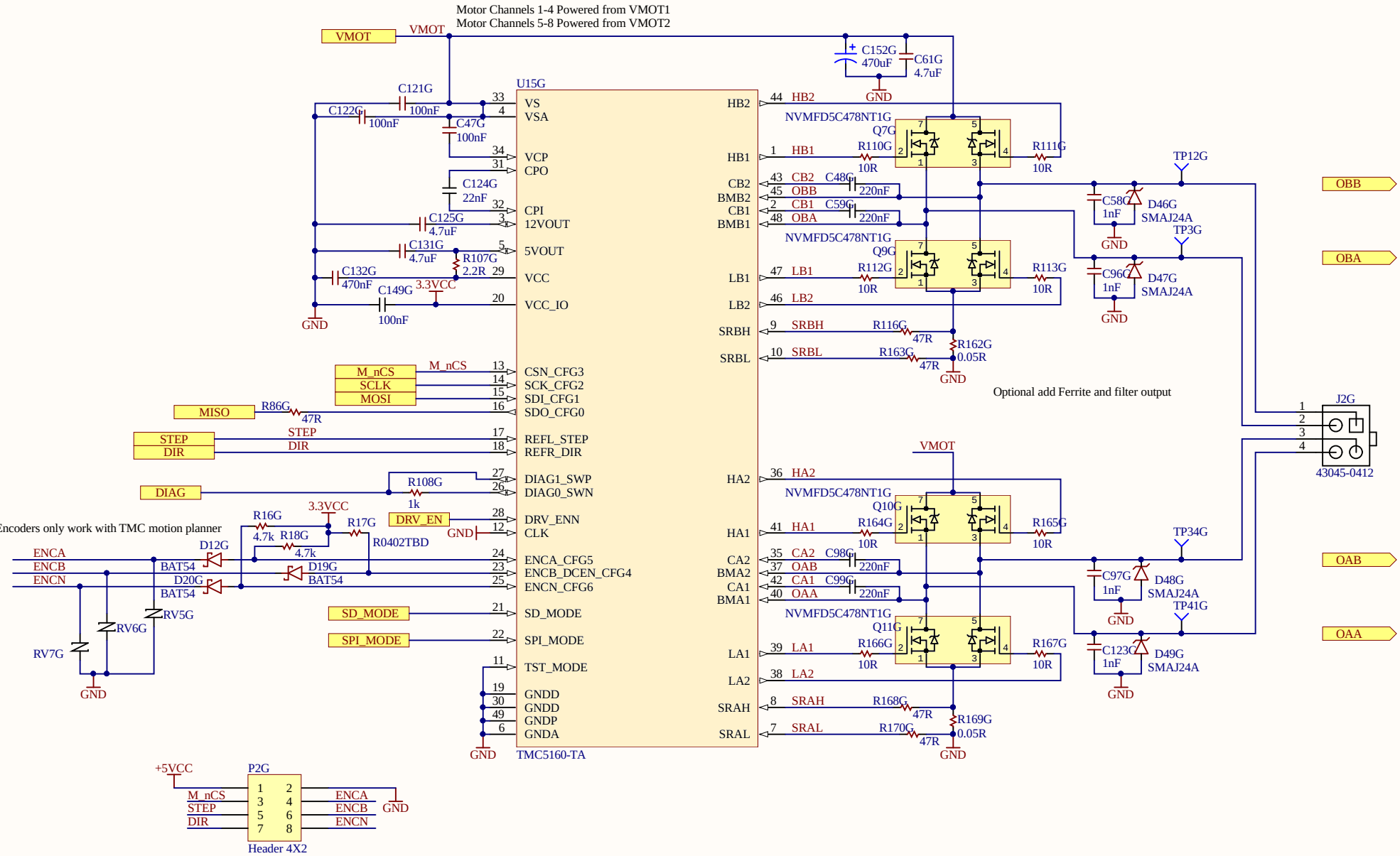

Project: Archimajor	Ver: 0.2a
Title: Motors	File: Motors.SchDoc
Drawn by: UltiMachine	Sheet: 5 of 11

Motor

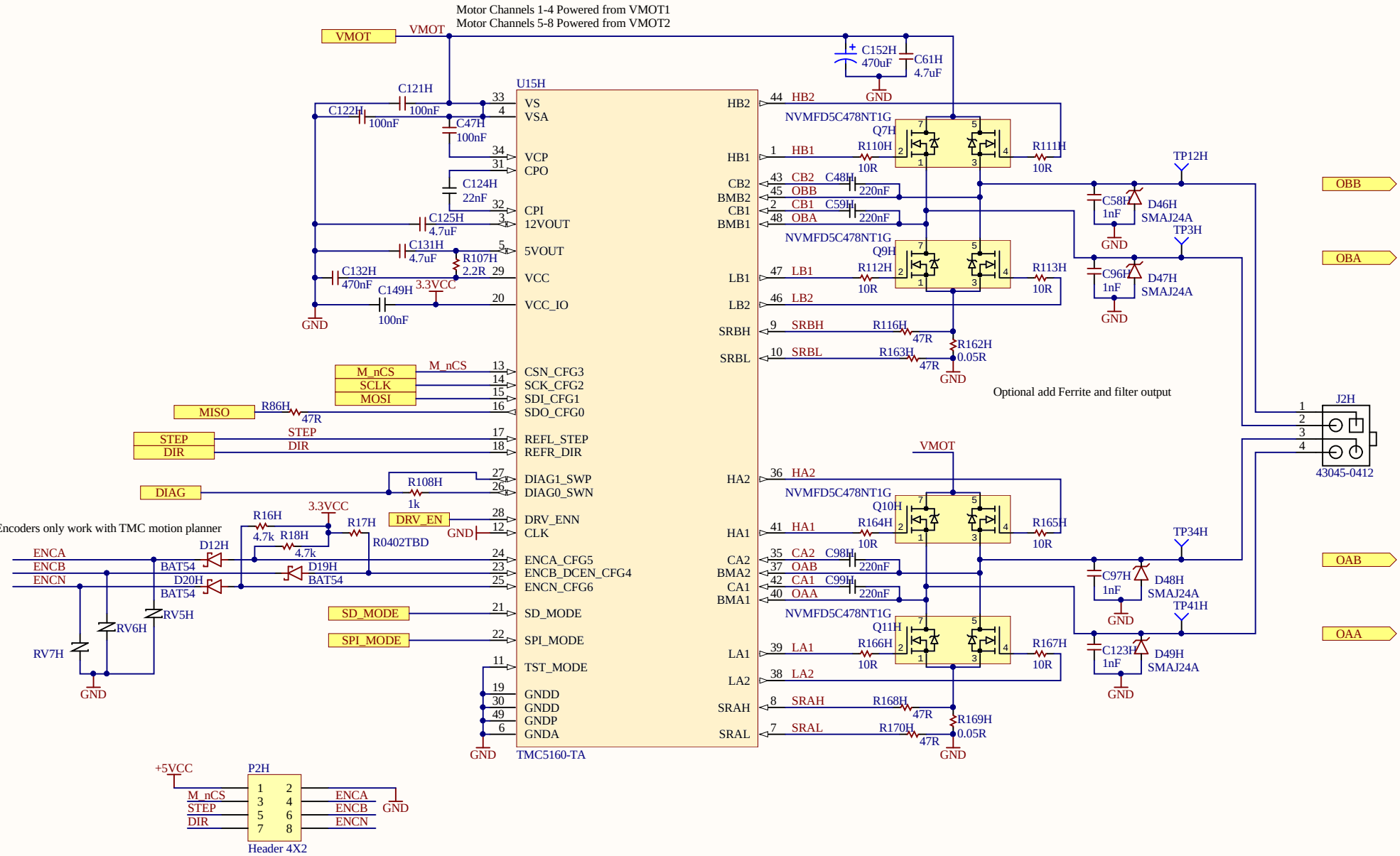

Project: Archimajor	Ver: 0.2a
Title: Motors	File: Motors.SchDoc
Drawn by: UltiMachine	Sheet: 5 of 11

End Stop Channels

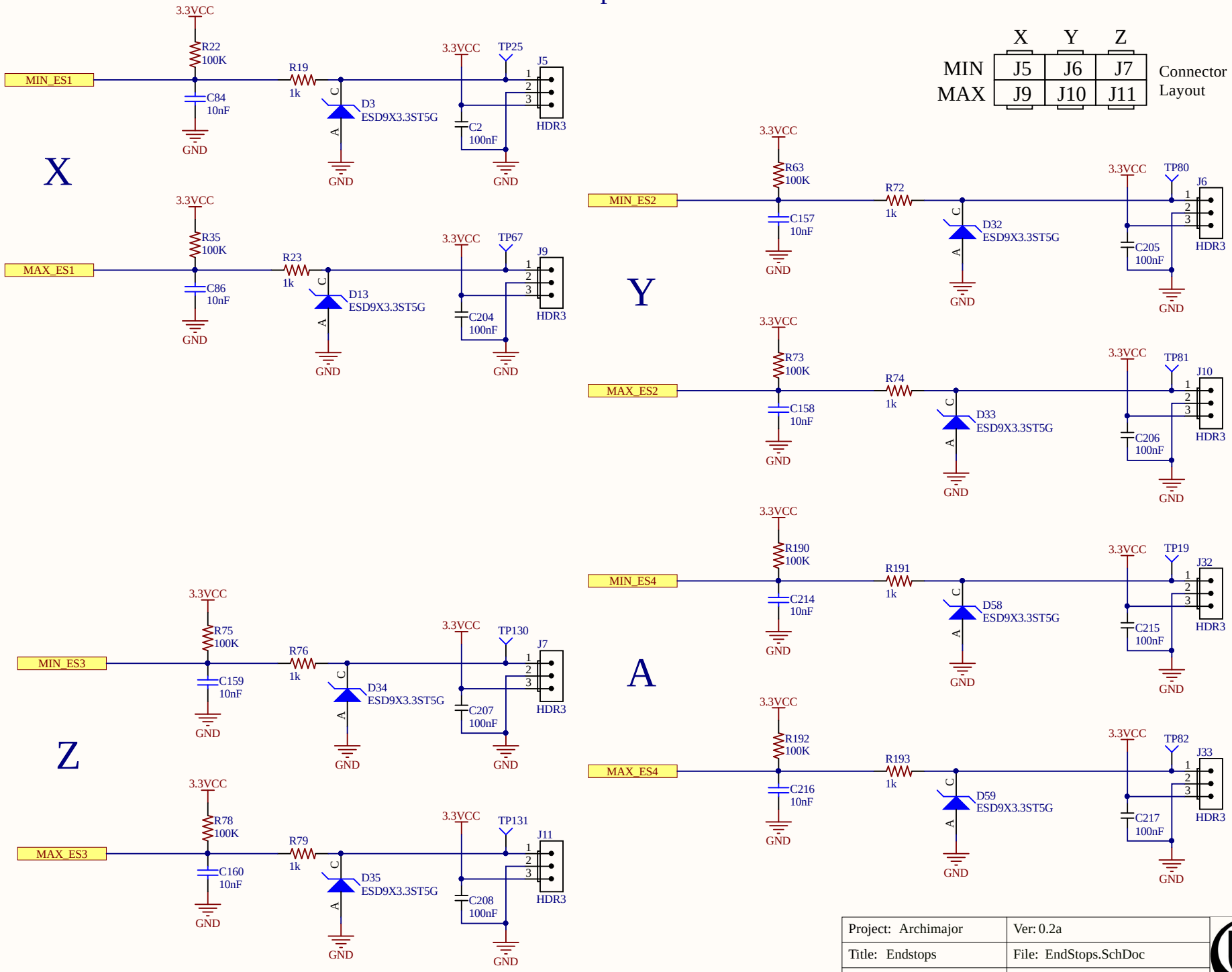

Project: Archimajor	Ver: 0.2a
Title: Endstops	File: EndStops.SchDoc
Drawn by: UltiMachine	Sheet: 6 of 11

Thermistor Channels

Thermistor Connector Layout

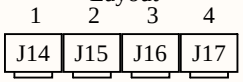

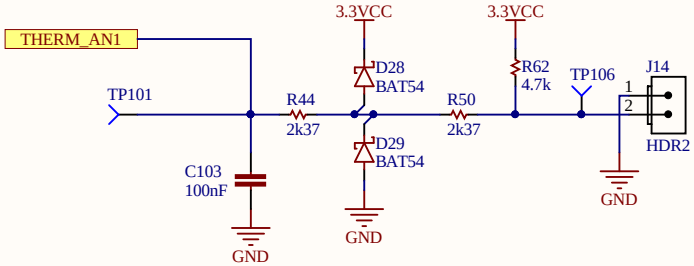

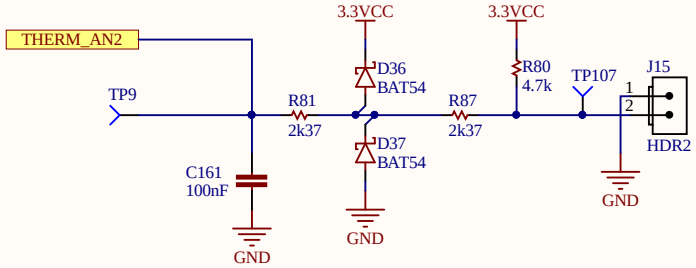

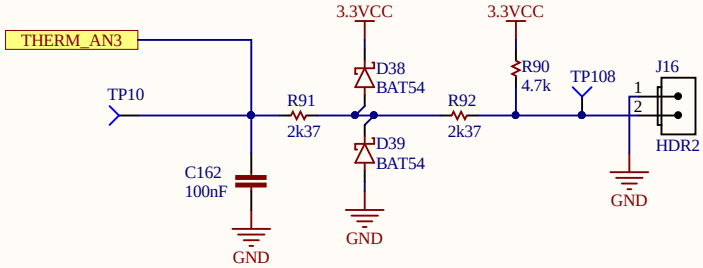

Project: Archimajor	Ver: 0.2a
Title: Thermistors	File: Thermistors.SchDoc
Drawn by: UltiMachine	Sheet: 7 of 11

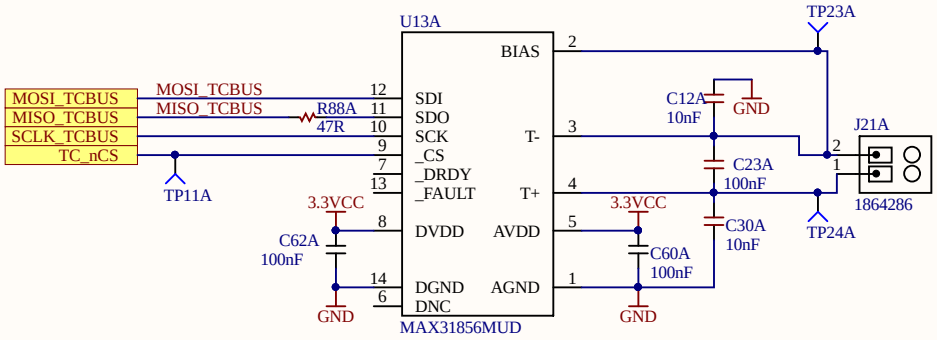

Project: Archimajor	Ver: 0.2a
Title: Thermocouples	File: Thermocouples.SchDoc
Drawn by: UltiMachine	Sheet: 8 of 11

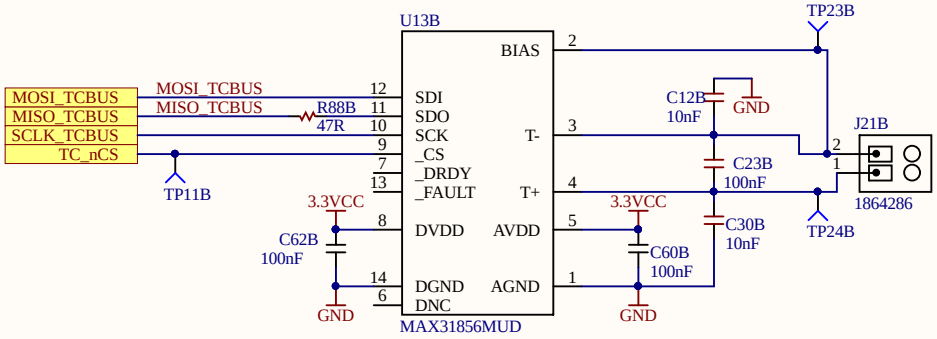

Project: Archimajor	Ver: 0.2a
Title: Thermocouples	File: Thermocouples.SchDoc
Drawn by: UltiMachine	Sheet: 8 of 11

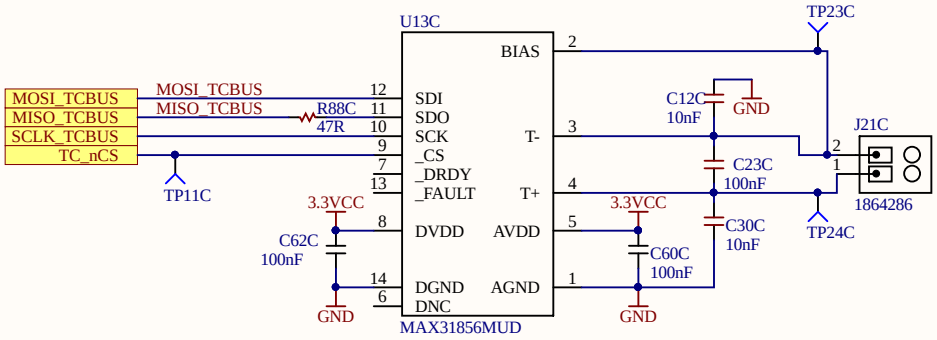

Project: Archimajor	Ver: 0.2a
Title: Thermocouples	File: Thermocouples.SchDoc
Drawn by: UltiMachine	Sheet: 8 of 11

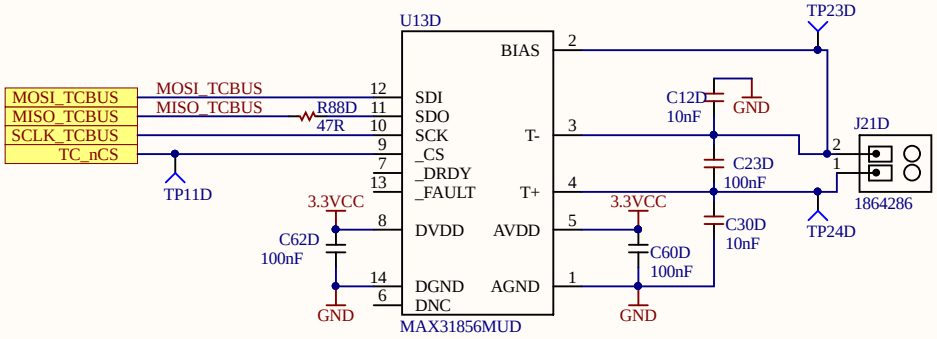

Project: Archimajor	Ver: 0.2a
Title: Thermocouples	File: Thermocouples.SchDoc
Drawn by: UltiMachine	Sheet: 8 of 11

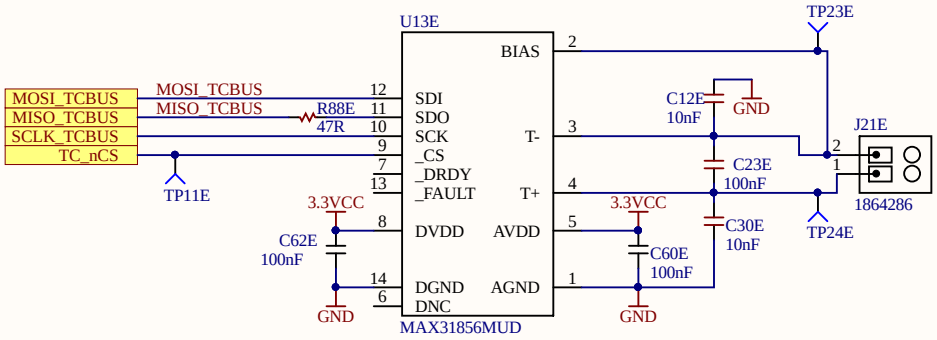

Project: Archimajor	Ver: 0.2a
Title: Thermocouples	File: Thermocouples.SchDoc
Drawn by: UltiMachine	Sheet: 8 of 11

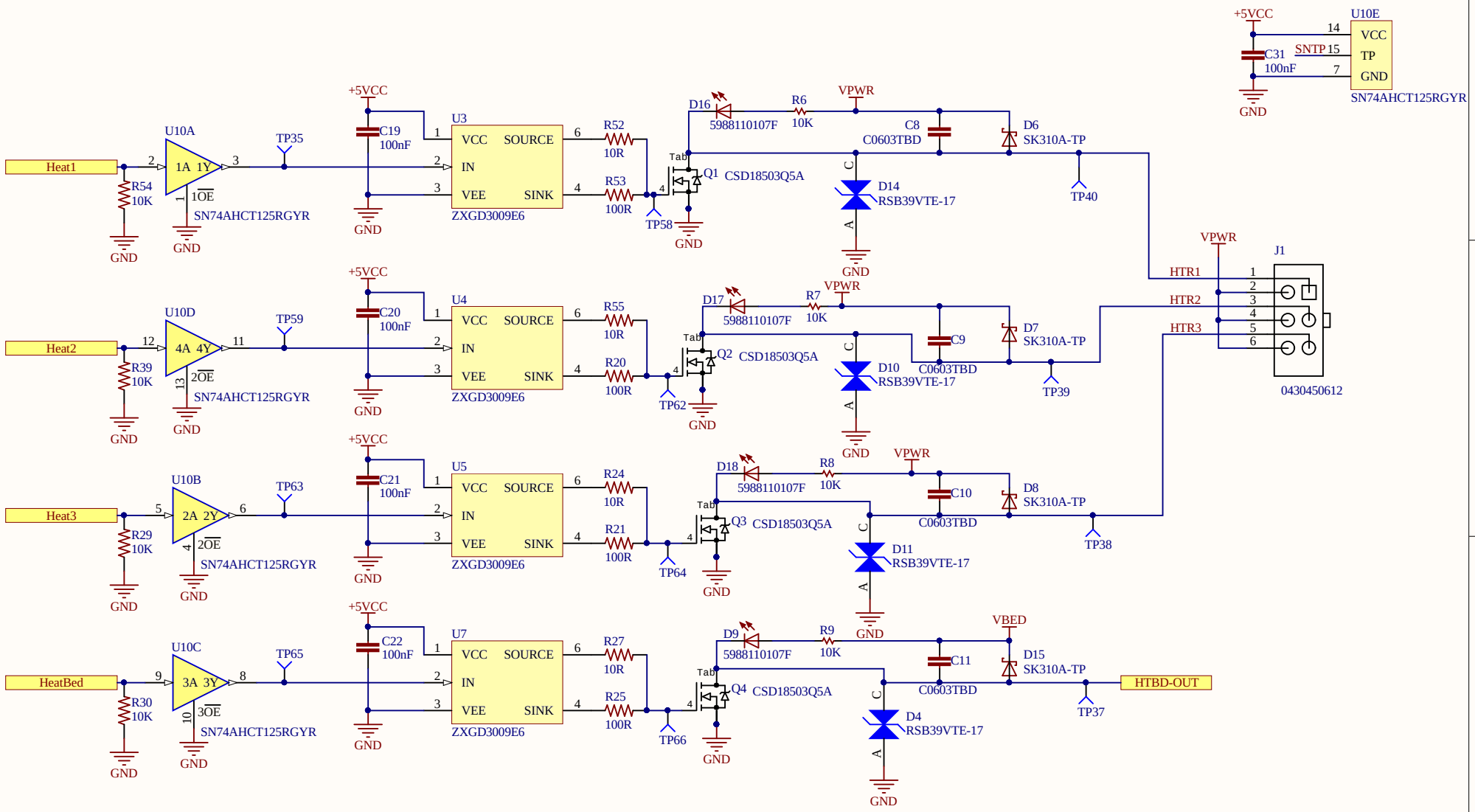

Project: Archimajor	Ver: 0.2a
Title: Mosfets	File: Mosfets.SchDoc
Drawn by: UltiMachine	Sheet: 9 of 11

Fans

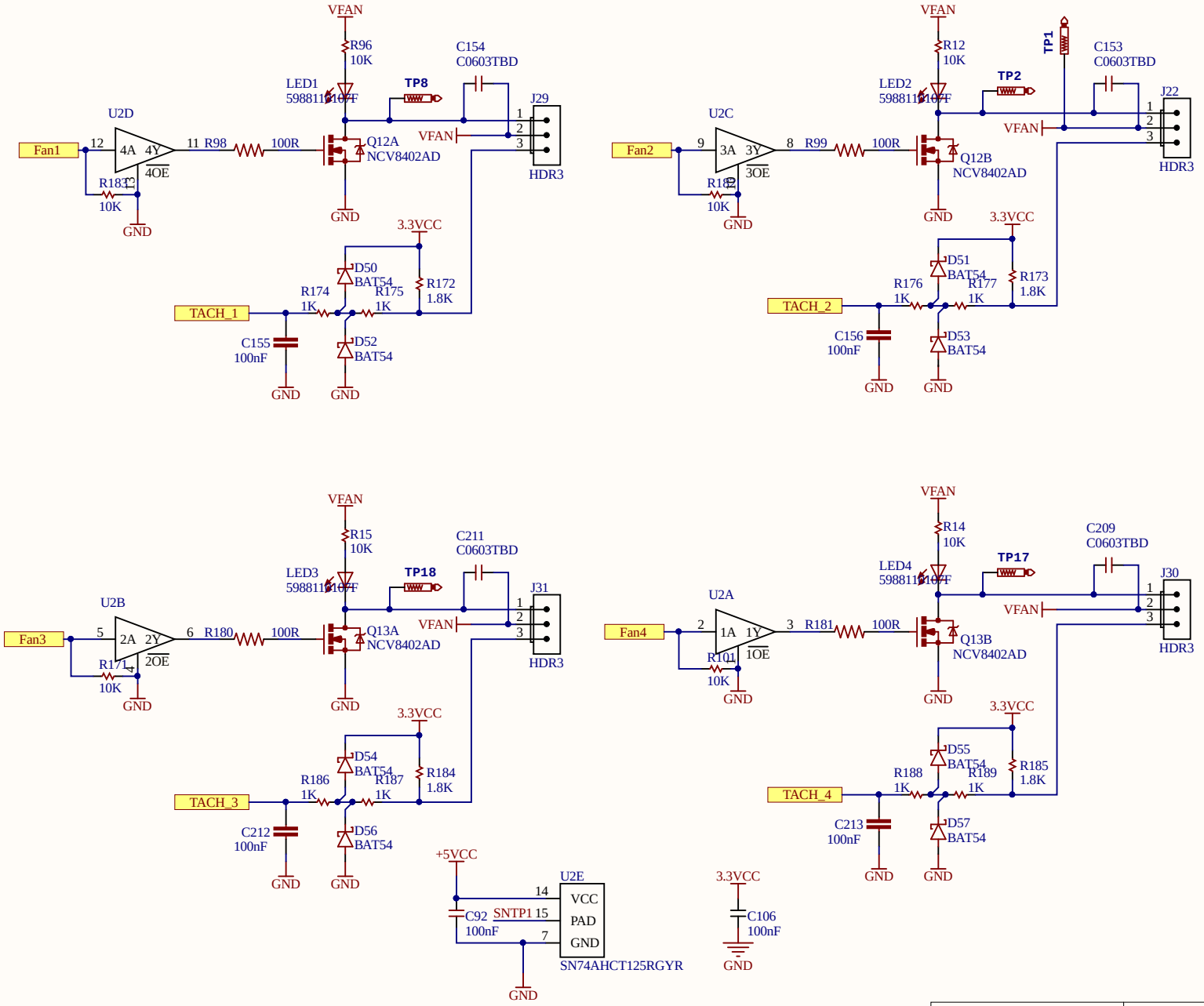

Project: Archimajor	Ver: 0.2a
Title: Fans	File: Fans.SchDoc
Drawn by: UltiMachine	Sheet: 10 of 11

Connectors

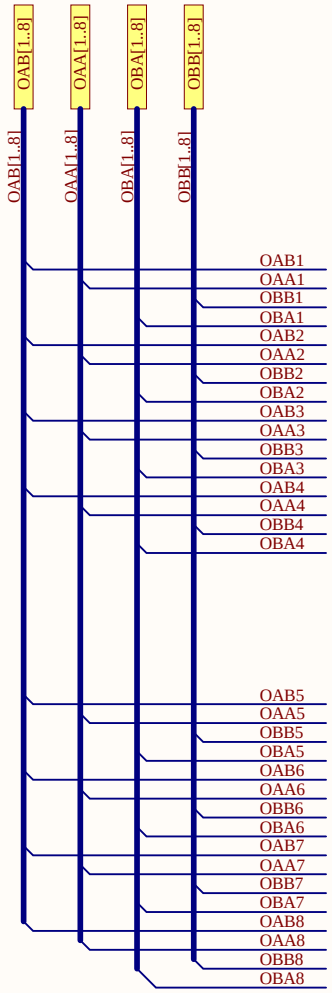

Motor 1

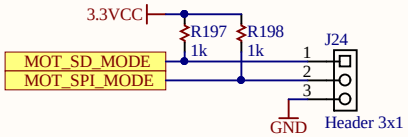

Project: Archimajor	Ver: 0.2a
Title: Connectors	File: Connectors.SchDoc
Drawn by: UltiMachine	Sheet: 11 of 11