High Accuracy Ambient Light Sensor With I²C Interface

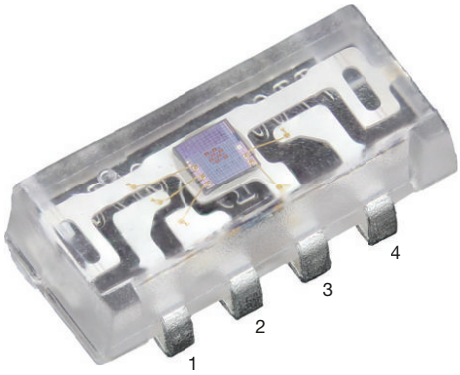

Pinning

1: SCL

2: V_{DD}

3: GND

4: SDA

DESCRIPTION

VEML7700 is a high accuracy ambient light digital 16-bit resolution sensor in a miniature transparent 6.8 mm x 2.35 mm x 3.0 mm package. It includes a high sensitive photo diode, a low noise amplifier, a 16-bit A/D converter and supports an easy to use I²C bus communication interface.

The ambient light result is as digital value available.

FEATURES

- Package type: surface-mount
- Package: side view
- Dimensions (L x W x H in mm): 6.8 x 2.35 x 3.0
- Integrated modules: ambient light sensor (ALS)
- Supply voltage range V_{DD}: 2.5 V to 3.6 V
- Communication via I²C interface
- Floor life: 72 h, MSL 4, according to J-STD-020
- Low shut down current consumption: typ. 0.5 µA
- Material categorization: for definitions of compliance please see www.vishay.com/doc?99912

Pb-free
e4
RoHS COMPLIANT
HALOGEN FREE
GREEN (5-2008)

AMBIENT LIGHT FUNCTION

- 16-bit dynamic range for ambient light detection from 0 lx to about 140 klx with resolution down to 0.0042 lx/ct, supports low transmittance (dark) lens design
- 100 Hz and 120 Hz flicker noise rejection
- Excellent temperature compensation
- High dynamic detection resolution
- Software shutdown mode control

APPLICATIONS

- Ambient light sensor for backlight dimming of e.g. TV displays, smart phones, touch phones, PDA, GPS
- Ambient light sensor for industrial on- / off-lighting operation
- Optical switch for consumer, computing, and industrial devices and displays

PRODUCT SUMMARY

PART NUMBER	OPERATING VOLTAGE RANGE (V)	I²C BUS VOLTAGE RANGE (V)	AMBIENT LIGHT RANGE (lx)	AMBIENT LIGHT RESOLUTION (lx)	OUTPUT CODE	ADC RESOLUTION PROXIMITY / AMBIENT LIGHT
VEML7700	2.5 to 3.6	1.7 to 3.6	0 to 140 000	0.0042	16 bit, I²C	- / 0.0042

ORDERING INFORMATION

ORDERING CODE	PACKAGING	VOLUME [1]	REMARKS
VEML7700-TR	Tape and reel	MOQ: 2300 (MOQ is one reel)	Side view
VEML7700-TT	Tape and reel	MOQ: 2200 (MOQ is one reel)	Top view

Note

[1] MOQ: minimum order quantity

For technical questions, contact: consumersensors@vishay.com
THIS DOCUMENT IS SUBJECT TO CHANGE WITHOUT NOTICE. THE PRODUCTS DESCRIBED HEREIN AND THIS DOCUMENT ARE SUBJECT TO SPECIFIC DISCLAIMERS, SET FORTH AT www.vishay.com/doc?91000

ABSOLUTE MAXIMUM RATINGS (T_{amb} = 25 °C, unless otherwise specified)					
PARAMETER	**TEST CONDITION**	**SYMBOL**	**MIN.**	**MAX.**	**UNIT**
Supply voltage		V_{DD}	0	4	V
Operation temperature range		T_{amb}	-25	+85	°C
Storage temperature range		T_{stg}	-25	+85	°C
Total power dissipation	$T_{amb} \leq 25$ °C	P_{tot}	-	50	mW
Junction temperature		T_j	-	100	°C

BASIC CHARACTERISTICS (T_{amb} = 25 °C, unless otherwise specified)						
PARAMETER	**TEST CONDITION**	**SYMBOL**	**MIN.**	**TYP.**	**MAX.**	**UNIT**
Supply voltage		V_{DD}	2.5	3.3	3.6	V
Shut down current [2]	V_{DD} is 3.3 V	I_{sd}	-	0.5	-	µA
Operation mode current [1]	V_{DD} is 3.3 V, PSM = 11, refresh time 4100 ms	I_{DD}	-	2	-	µA
	V_{DD} is 3.3 V, PSM = 00, refresh time 600 ms	I_{DD}	-	8	-	µA
	V_{DD} is 3.3 V, PSM_EN = 0, refresh time 100 ms	I_{DD}		45	-	µA
I^2C clock rate range		f_{SCL}	10	-	400	kHz
I^2C bus input H-level range	V_{DD} is 3.3 V	V_{ih}	1.3	-	3.6	V
I^2C bus input L-level range	V_{DD} is 3.3 V	V_{il}	-0.3	-	0.4	V
Digital current out (low, current sink)		I_{ol}	3	-	-	mA
Digital resolution (LSB count) [3]	With ALS_GAIN = x 2, ALS_IT = 800 ms		-	0.0042	-	lx/step
Detectable maximum illuminance [3]	With ALS_GAIN = x 1/8, ALS_IT = 25 ms	$E_{V\ max.}$	-	140 000	-	lx
Dark offset [2]	With ALS_GAIN = x 2, ALS_IT = 800 ms		-	3	-	step

Notes

(1) Light source: white LED
(2) Light conditions: dark
(3) Refer to the application note for resolution table at different settings

CIRCUIT BLOCK DIAGRAM

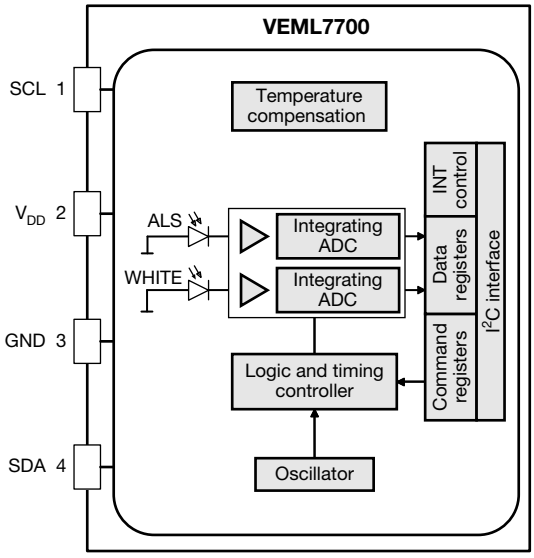

Fig. 1 - Block Diagram

For technical questions, contact: consumersensors@vishay.com
THIS DOCUMENT IS SUBJECT TO CHANGE WITHOUT NOTICE. THE PRODUCTS DESCRIBED HEREIN AND THIS DOCUMENT ARE SUBJECT TO SPECIFIC DISCLAIMERS, SET FORTH AT www.vishay.com/doc?91000

I²C TIMING CHARACTERISTICS (T_{amb} = 25 °C, unless otherwise specified)						
PARAMETER	**SYMBOL**	**STANDARD MODE (1)**		**FAST MODE (1)**		**UNIT**
		MIN.	**MAX.**	**MIN.**	**MAX.**	
Clock frequency	$f_{(SMBCLK)}$	10	100	10	400	kHz
Bus free time between start and stop condition	$t_{(BUF)}$	4.7	-	1.3	-	µs
Hold time after (repeated) start condition; after this period, the first clock is generated	$t_{(HDSTA)}$	4.0	-	0.6	-	µs
Repeated start condition setup time	$t_{(SUSTA)}$	4.7	-	0.6	-	µs
Stop condition setup time	$t_{(SUSTO)}$	4.0	-	0.6	-	µs
Data hold time	$t_{(HDDAT)}$	0	3450	0	900	ns
Data setup time	$t_{(SUDAT)}$	250	-	100	-	ns
I²C clock (SCK) low period	$t_{(LOW)}$	4.7	-	1.3	-	µs
I²C clock (SCK) high period	$t_{(HIGH)}$	4.0	-	0.6	-	µs
Detect clock / data low timeout	$t_{(TIMEOUT)}$	25	35	-	-	ms
Clock / data fall time	$t_{(F)}$	-	300	-	300	ns
Clock / data rise time	$t_{(R)}$	-	1000	-	300	ns

Note

(1) Data based on standard I²C protocol requirement, not tested in production

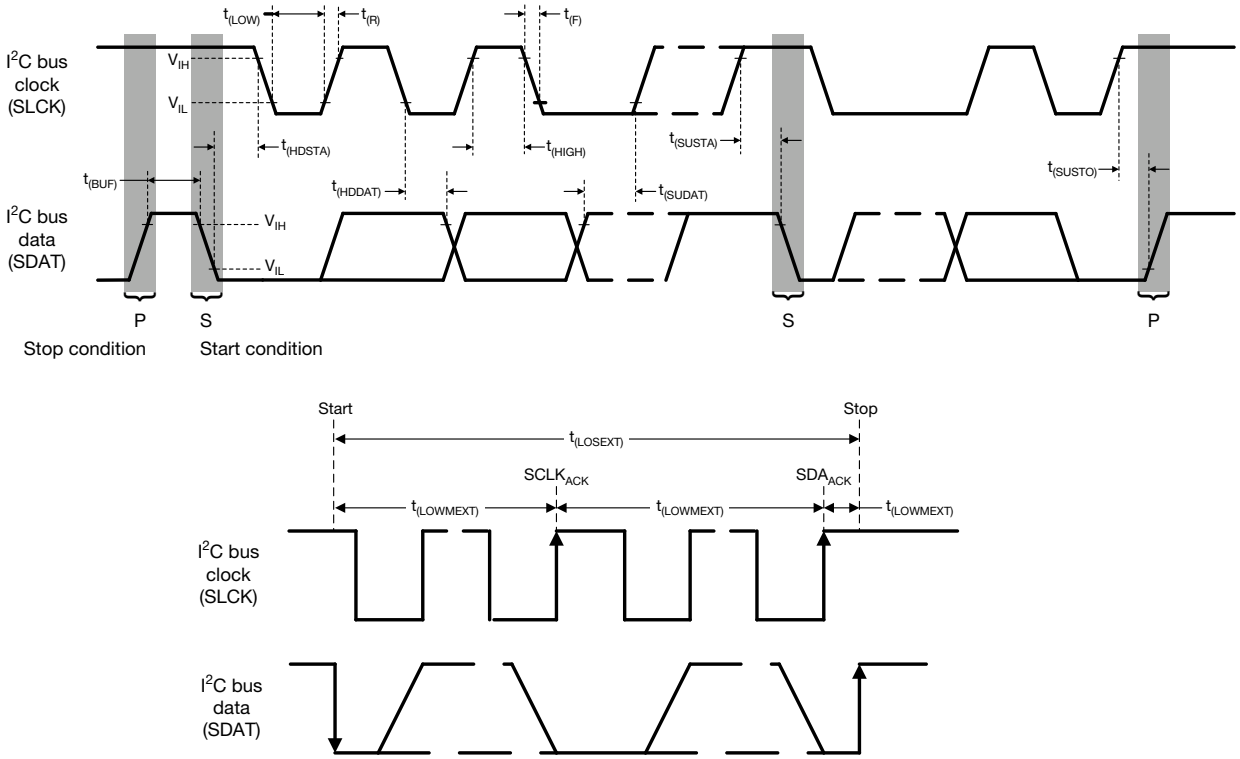

Fig. 2 - I²C Timing Diagram

For technical questions, contact: consumersensors@vishay.com
THIS DOCUMENT IS SUBJECT TO CHANGE WITHOUT NOTICE. THE PRODUCTS DESCRIBED HEREIN AND THIS DOCUMENT ARE SUBJECT TO SPECIFIC DISCLAIMERS, SET FORTH AT www.vishay.com/doc?91000

PARAMETER TIMING INFORMATION

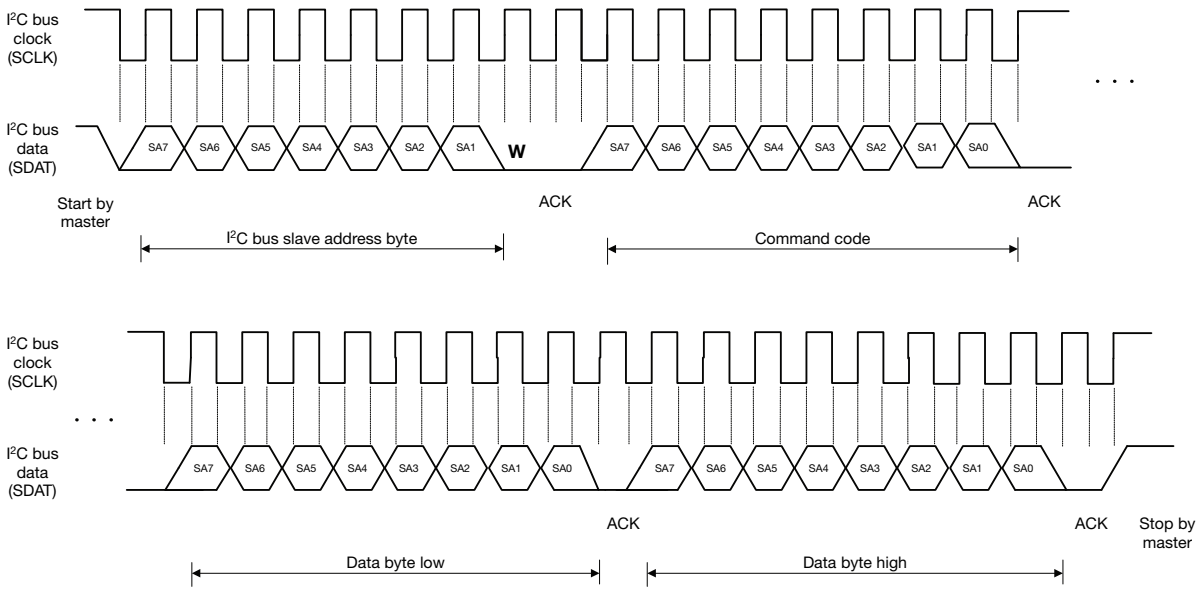

Fig. 3 - I²C Bus Timing for Sending Word Command Format

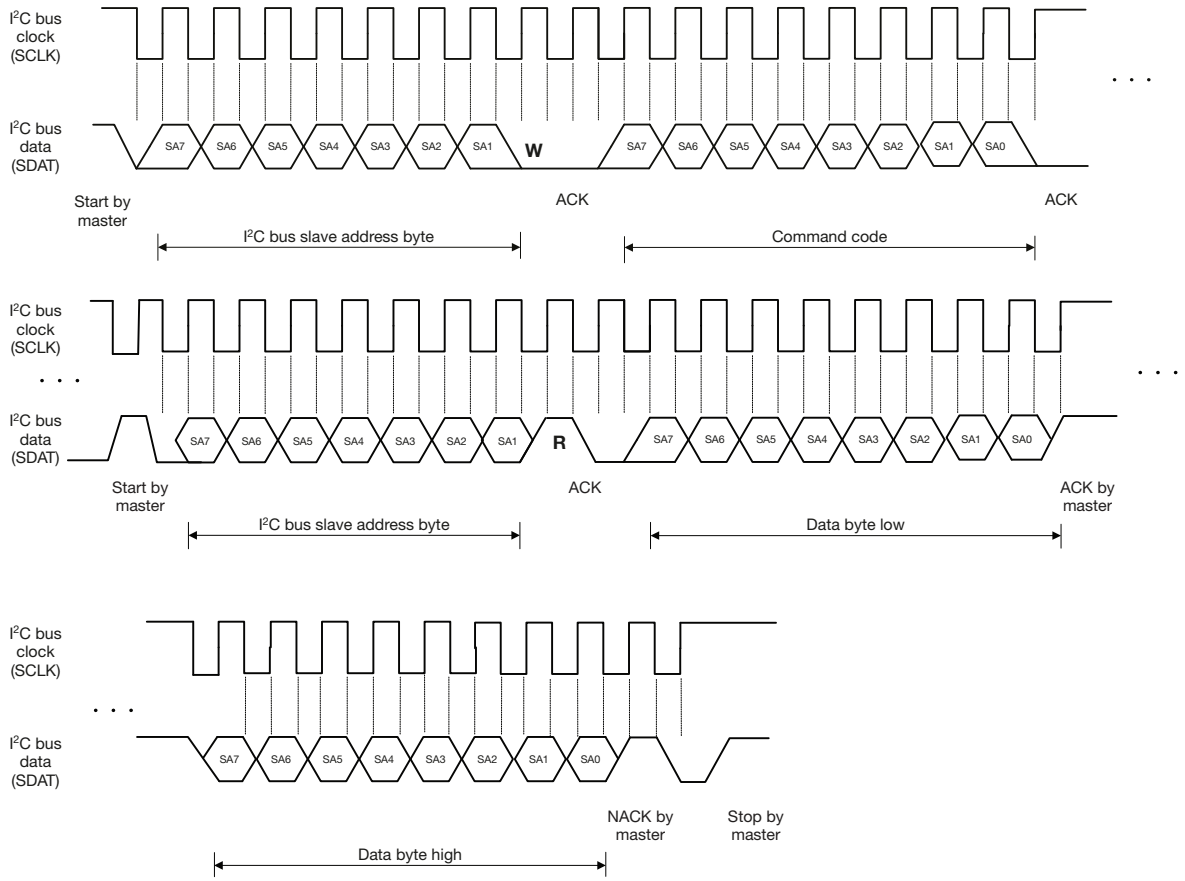

Fig. 4 - I²C Bus Timing for Receive Word Command Format

For technical questions, contact: consumersensors@vishay.com
THIS DOCUMENT IS SUBJECT TO CHANGE WITHOUT NOTICE. THE PRODUCTS DESCRIBED HEREIN AND THIS DOCUMENT ARE SUBJECT TO SPECIFIC DISCLAIMERS, SET FORTH AT www.vishay.com/doc?91000

BASIC CHARACTERISTICS (T_{amb} = 25 °C, unless otherwise specified)

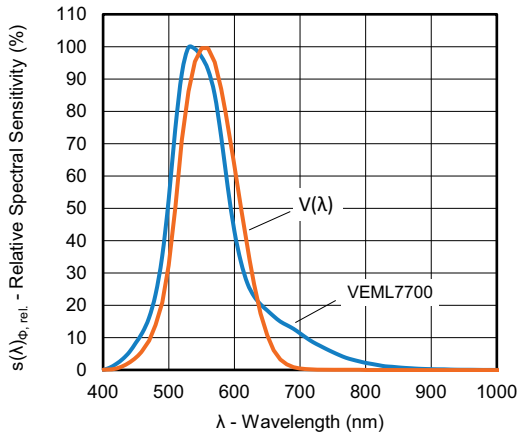

Fig. 5 - Spectral Response

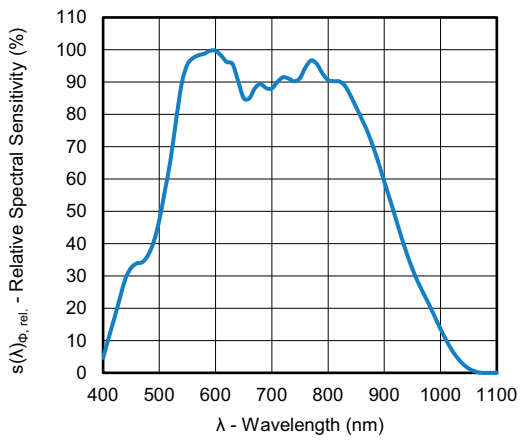

Fig. 6 - White Channel Sensitivity Spectrum

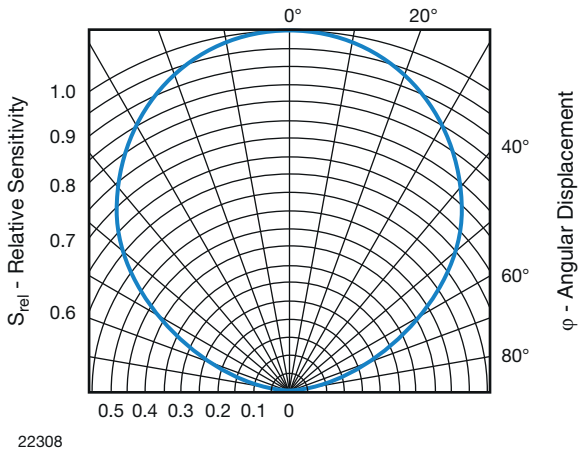

Fig. 7 - Relative Sensitivity vs. Angular Displacement

For technical questions, contact: consumersensors@vishay.com
THIS DOCUMENT IS SUBJECT TO CHANGE WITHOUT NOTICE. THE PRODUCTS DESCRIBED HEREIN AND THIS DOCUMENT ARE SUBJECT TO SPECIFIC DISCLAIMERS, SET FORTH AT www.vishay.com/doc?91000

APPLICATION INFORMATION

VEML7700 is a cost effective solution of ambient light sensor with I²C bus interface. The standard serial digital interface is easy to access "Ambient Light Signal" without complex calculation and programming by external controller.

1. Application Circuit

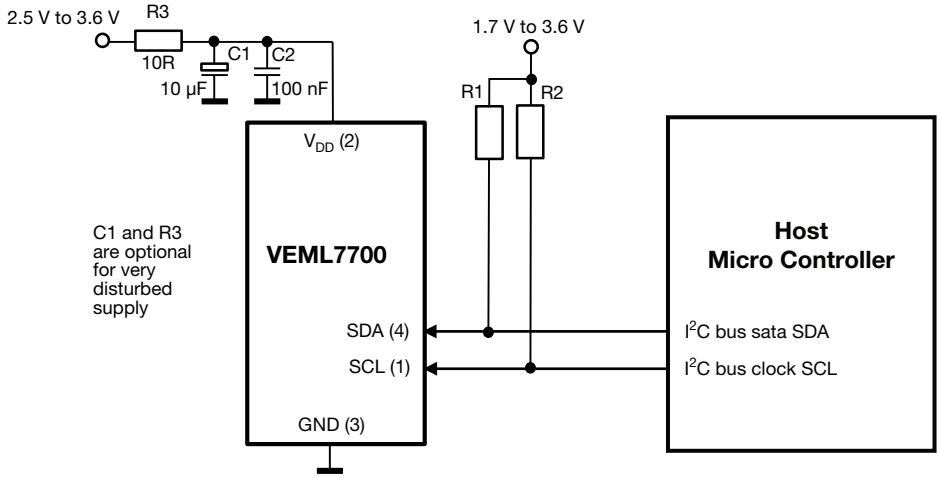

Fig. 8 - Application Diagram

Notes

- Proposed values for the pull-up resistor R1 and R2 should be > 1 kΩ, e.g. 2.2 kΩ to 4.7 kΩ.
- For detailed description about set-up and use as well as more application related information see AN: "Designing VEML7700 into an Application"

2. I²C Interface

The VEML7700 contains actual six 16 bit command codes for operation control, parameter setup, and result buffering. All registers are accessible via I²C communication. Fig. 10 shows the basic I²C communication with VEML7700.

The built in I²C interface is compatible with I²C modes "standard" and "fast": 10 kHz to 400 kHz.

I²C H-level range = 1.3 V to 3.6 V.

Please refer to the I²C specification from NXP for details.

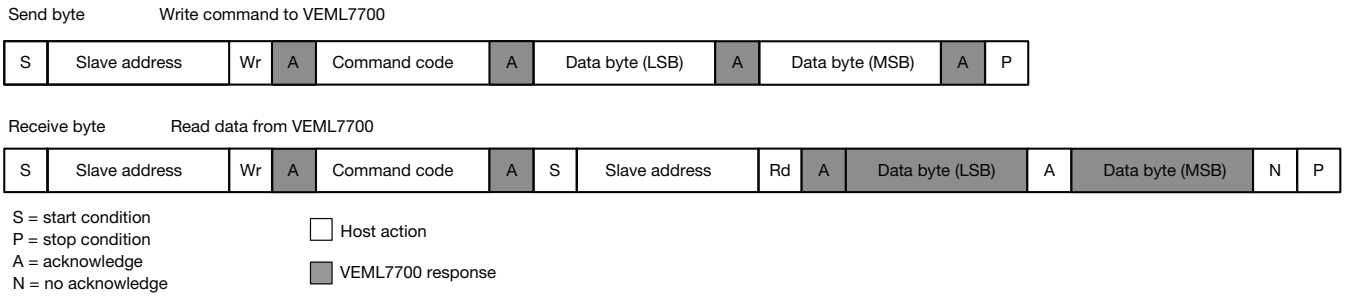

Fig. 9 - Send Byte / Receive Byte Protocol

Register Addresses

VEML7700 has actual six user accessible 16 bit command codes.

The addresses are 00h to 06h (03h not defined / reserved).

Device Address

The VEML7700 has a fix slave address for the host programming and accessing selection.

The slave address (7 bit) is set to 0010000 = 0x10.

The least significant bit (LSB) defines read or write mode.

According 8 bit the bus address is then 0010 0000 = 20h for write and 0010 0001 = 21h for read.

Auto-Memorization

VEML7700 can memorize the last ambient data before shutdown and keep this data before waking up.

When VEML7700 is in shutdown mode, the host can freely read this data via read command directly.

When VEML7700 wakes up, the data will be refreshed by new detection.

For technical questions, contact: consumersensors@vishay.com
THIS DOCUMENT IS SUBJECT TO CHANGE WITHOUT NOTICE. THE PRODUCTS DESCRIBED HEREIN AND THIS DOCUMENT ARE SUBJECT TO SPECIFIC DISCLAIMERS, SET FORTH AT www.vishay.com/doc?91000

Interrupt pin not available for VEML7700

COMMAND REGISTER FORMAT				
COMMAND CODE	REGISTER NAME	BIT	FUNCTION / DESCRIPTION	R / W
00	ALS_CONF_0	15 : 0	ALS gain, integration time, interrupt, and shutdown	R / W
01	ALS_WH	15 : 8	ALS high threshold window setting (MSB)	R / W
		7 : 0	ALS high threshold window setting (LSB)	R / W
02	ALS_WL	15 : 8	ALS low threshold window setting (MSB)	R / W
		7 : 0	ALS low threshold window setting (LSB)	R / W
03	Power saving	15 : 0	Set (15 : 3) 0000 0000 0000 0b	R / W
04	ALS	15 : 8	MSB 8 bits data of whole ALS 16 bits	R
		7 : 0	LSB 8 bits data of whole ALS 16 bits	R
05	WHITE	15 : 8	MSB 8 bits data of whole WHITE 16 bits	R
		7 : 0	LSB 8 bits data of whole WHITE 16 bits	R
06	ALS_INT	15 : 0	ALS INT trigger event	R
07	ID	15 : 0	Device ID	R

Note

- Command code 0 default value is 01 = devices is shut down

Command Code #0: Configuration Register

Register address = 00h
The command code #0 is for configuration of the ambient light measurements.

TABLE 1 - CONFIGURATION REGISTER #0			
REGISTER NAME	BIT	FUNCTION / DESCRIPTION	R / W
Reserved	15 : 13	Set 000b	R / W
ALS_GAIN	12 : 11	Gain selection 00 = ALS gain x 1 01 = ALS gain x 2 10 = ALS gain x (1/8) 11 = ALS gain x (1/4)	R / W
reserved	10	Set 0b	R / W
ALS_IT	9 : 6	ALS integration time setting 1100 = 25 ms 1000 = 50 ms 0000 = 100 ms 0001 = 200 ms 0010 = 400 ms 0011 = 800 ms	R / W
ALS_PERS	5 : 4	ALS persistence protect number setting 00 = 1 01 = 2 10 = 4 11 = 8	R / W
Reserved	3 : 2	Set 00b	R / W
ALS_INT_EN	1	ALS interrupt enable setting 0 = ALS INT disable 1 = ALS INT enable	R / W
ALS_SD	0	ALS shut down setting 0 = ALS power on 1 = ALS shut down	R / W

Note

- Light level [lx] is (ALS OUTPUT DATA [dec.] / ALS Gain x responsivity). Please study also the application note

For technical questions, contact: consumersensors@vishay.com
THIS DOCUMENT IS SUBJECT TO CHANGE WITHOUT NOTICE. THE PRODUCTS DESCRIBED HEREIN AND THIS DOCUMENT ARE SUBJECT TO SPECIFIC DISCLAIMERS, SET FORTH AT www.vishay.com/doc?91000

Command Code #1: High Threshold Windows Setting

Command code address = 01h. Once enable INT function and use high / low windows threshold, bit 15:0 provides 16 bit register for high bound threshold windows setting.

TABLE 2 - HIGH THRESHOLD WINDOWS SETTING #1															
Bit 15	Bit 14	Bit 13	Bit 12	Bit 11	Bit 10	Bit 9	Bit 8	Bit 7	Bit 6	Bit 5	Bit 4	Bit 3	Bit 2	Bit 1	Bit 0
Description															
ALS high threshold window setting (15:8 MSB 8 bits of whole 16 bits)															
ALS high threshold window setting (7:0 LSB 8 bits of whole 16 bits)															

Command Code #2: Low Threshold Windows Setting

Command code address = 02h. Once enable INT function and use high / low windows threshold, bit 15:0 provides 16 bit register for low bound threshold windows setting.

TABLE 3 - LOW THRESHOLD WINDOWS SETTING #2															
Bit 15	Bit 14	Bit 13	Bit 12	Bit 11	Bit 10	Bit 9	Bit 8	Bit 7	Bit 6	Bit 5	Bit 4	Bit 3	Bit 2	Bit 1	Bit 0
Description															
ALS low threshold window setting (15:8 MSB 8 bits of whole 16 bits)															
ALS low threshold window setting (7:0 LSB 8 bits of whole 16 bits)															

Command Code #3: Power Saving Mode: PSM

Command code address = 03h. Bits 2 and 1 define the power saving modes. Bits 15 : 3 are reserved.

TABLE 4 - POWER SAVING MODES			
REGISTER NAME	**BIT**	**FUNCTION / DESCRIPTION**	**R / W**
PSM	2 : 1	Power saving mode; see table “Refresh time” 00 = mode 1 01 = mode 2 10 = mode 3 11 = mode 4	R / W
PSM_EN	0	Power saving mode enable setting 0 = disable 1 = enable	R / W

Command Code #4: ALS High Resolution Output Data

Command code address = 04h. To access 16 bit high resolution ALS output, it is suitable to follow read protocol to read from command code 04 16 bits register.

TABLE 5 - ALS HIGH RESOLUTION OUTPUT DATA #4															
Bit 15	Bit 14	Bit 13	Bit 12	Bit 11	Bit 10	Bit 9	Bit 8	Bit 7	Bit 6	Bit 5	Bit 4	Bit 3	Bit 2	Bit 1	Bit 0
Description															
ALS high resolution output data (15 : 8 MSB 8 bits of whole 16 bits)															
ALS high resolution output data (7 : 0 LSB 8 bits of whole 16 bits)															

Command Code #5: White Channel Output Data

Command code address = 05h. To access 16 bit WHITE output, it is suitable to follow read protocol to read from command code 05 16 bits register.

TABLE 6 - WHITE CHANNEL OUTPUT DATA #5															
Bit 15	Bit 14	Bit 13	Bit 12	Bit 11	Bit 10	Bit 9	Bit 8	Bit 7	Bit 6	Bit 5	Bit 4	Bit 3	Bit 2	Bit 1	Bit 0
Description															
WHITE output data (15 : 8 MSB 8 bits of whole 16 bits)															
WHITE output data (7 : 0 LSB 8 bits of whole 16 bits)															

For technical questions, contact: consumersensors@vishay.com
THIS DOCUMENT IS SUBJECT TO CHANGE WITHOUT NOTICE. THE PRODUCTS DESCRIBED HEREIN AND THIS DOCUMENT ARE SUBJECT TO SPECIFIC DISCLAIMERS, SET FORTH AT www.vishay.com/doc?91000

Command Code #6: Interrupt Status

Command code address = 06h. Bit 15 defines interrupt flag while trigger occurred due to data crossing low threshold windows. Bit 14 defines interrupt flag while trigger occurred due to data crossing high threshold windows.

TABLE 7 - INTERRUPT STATUS #6		
Bit 15	Bit 14	Bit 13 to 0
int_th_low	int_th_high	reserved
Description		
int_th_low	R bit. Indicated a low threshold exceed	
int_th_high	R bit. Indicated a high threshold exceed	

Command Code #7: ID Register

Command code address = 07h. The low byte of the ID register contains the device specific ID code 81h. The high byte contains a code that depends on the chosen slave address option: either 0xC4 for a device with slave address 0x20, or 0xD4 for a device with slave address 0x90

TABLE 8 - DEVICE ID #7	
Bit 15 to 8	Bit 7 to 0
Slave address option code	Device ID code
Description	
Slave address option code	Slave address specific ID For slave address option 0x20: 11000100 = 0xC4 For slave address option 0x90: 11010100 = 0xD4
Device ID code	Fixed device ID: 10000001 = 0x81

REFRESH TIME DETERMINATION OF PSM

VEML7700's refresh time can be determined by PSM and ALS_IT setting in power saving mode (PSM). Cooperating with the command register setting, the designer has a flexible method in defining the timing, power consumption, and sensitivity for light data collection.

REFRESH TIME, I_{DD}, AND RESOLUTION RELATION

ALS_GAIN	PSM	ALS_IT (ms)	REFRESH TIME (ms)	I_{DD} (μA)	RESOLUTION (lx/bit)
x2	Mode 1	100	600	8	0.0336
x2	Mode 2	100	1100	5	0.0336
x2	Mode 3	100	2100	3	0.0336
x2	Mode 4	100	4100	2	0.0336
x2	Mode 1	200	700	13	0.0168
x2	Mode 2	200	1200	8	0.0168
x2	Mode 3	200	2200	5	0.0168
x2	Mode 4	200	4200	3	0.0168
x2	Mode 1	400	900	20	0.0084
x2	Mode 2	400	1400	13	0.0084
x2	Mode 3	400	2400	8	0.0084
x2	Mode 4	400	4400	5	0.0084
x2	Mode 1	800	1300	28	0.0042
x2	Mode 2	800	1800	20	0.0042
x2	Mode 3	800	2800	13	0.0042
x2	Mode 4	800	4800	8	0.0042

For technical questions, contact: consumersensors@vishay.com
THIS DOCUMENT IS SUBJECT TO CHANGE WITHOUT NOTICE. THE PRODUCTS DESCRIBED HEREIN AND THIS DOCUMENT ARE SUBJECT TO SPECIFIC DISCLAIMERS, SET FORTH AT www.vishay.com/doc?91000

PACKAGE DIMENSIONS in millimeters

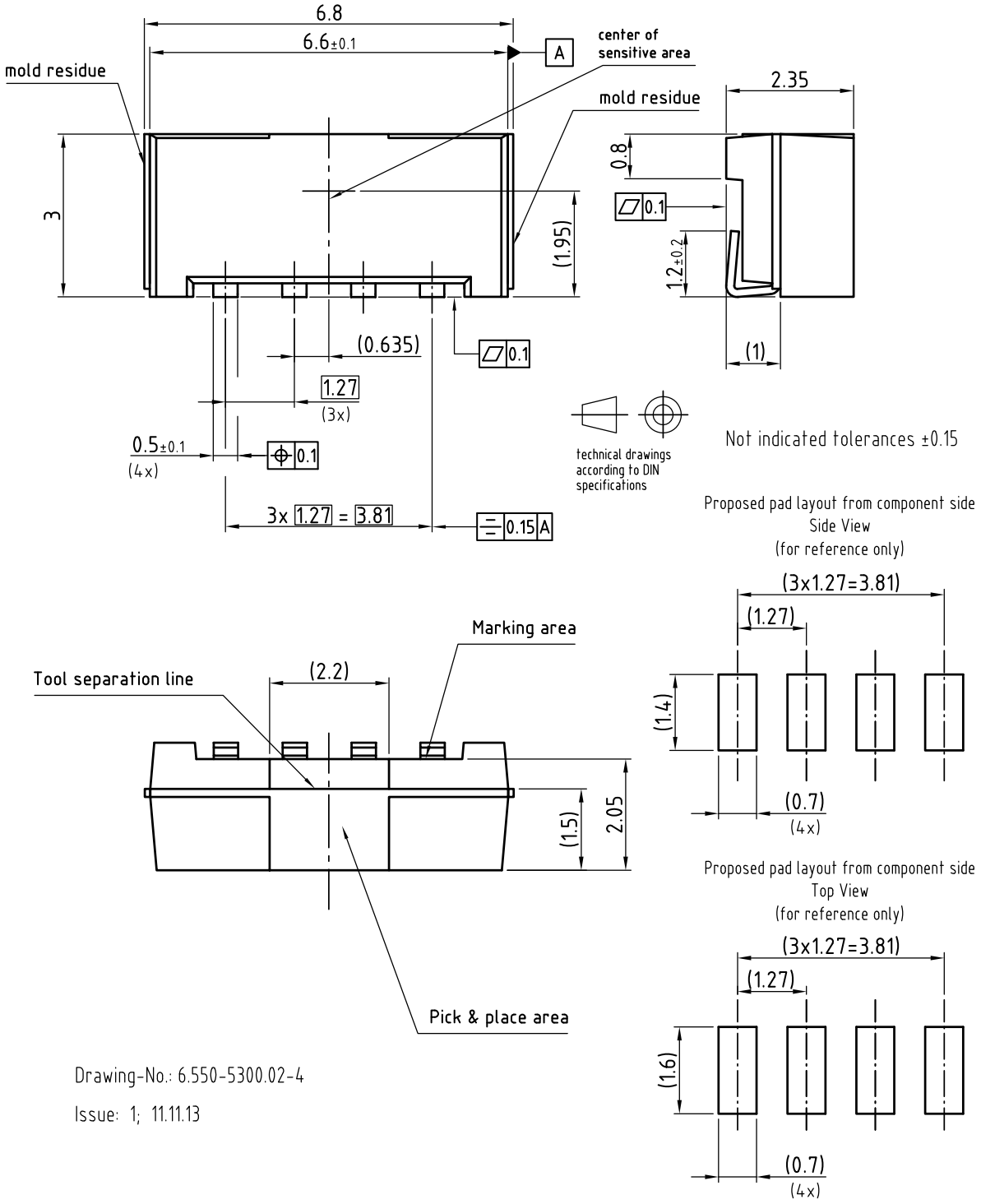

For technical questions, contact: consumersensors@vishay.com
THIS DOCUMENT IS SUBJECT TO CHANGE WITHOUT NOTICE. THE PRODUCTS DESCRIBED HEREIN AND THIS DOCUMENT ARE SUBJECT TO SPECIFIC DISCLAIMERS, SET FORTH AT www.vishay.com/doc?91000

TAPING SIDE VIEW (-TR VERSION) in millimeters

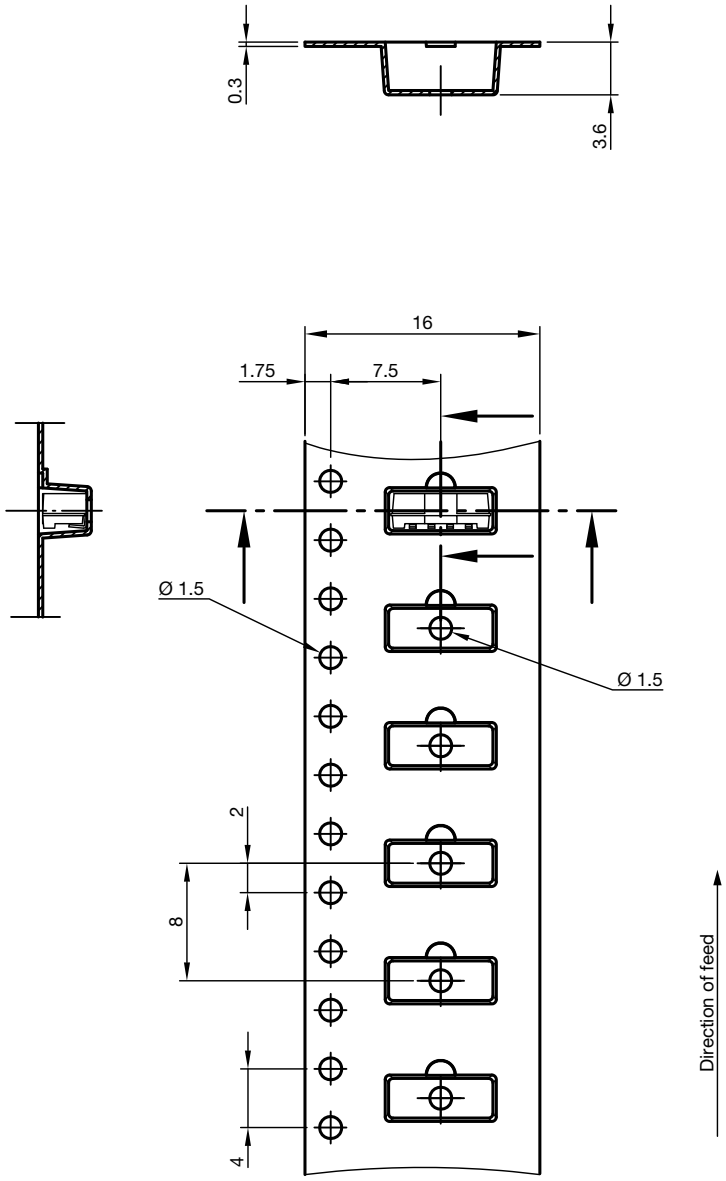

Drawing-No.: 9.700-5342.01-4
Issue: 2; 12.06.13

technical drawings
according to DIN
specifications

For technical questions, contact: consumersensors@vishay.com
THIS DOCUMENT IS SUBJECT TO CHANGE WITHOUT NOTICE. THE PRODUCTS DESCRIBED HEREIN AND THIS DOCUMENT ARE SUBJECT TO SPECIFIC DISCLAIMERS, SET FORTH AT www.vishay.com/doc?91000

TAPING TOP VIEW (-TT VERSION) in millimeters

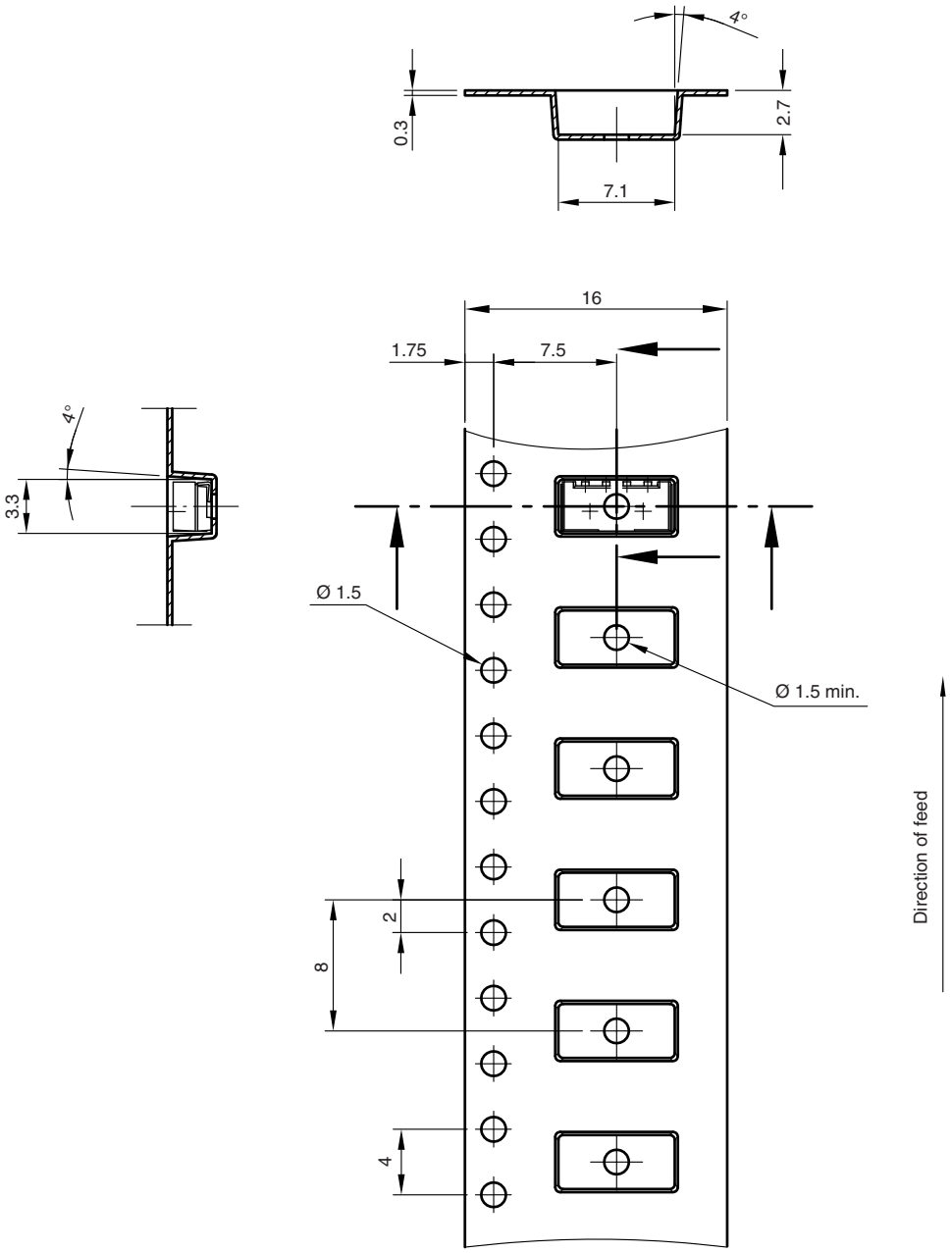

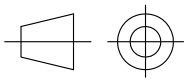

technical drawings according to DIN specifications

Drawing-No.: 9.700-5341.01-4
Issue: 2: 23.03.09
21666

For technical questions, contact: consumersensors@vishay.com
THIS DOCUMENT IS SUBJECT TO CHANGE WITHOUT NOTICE. THE PRODUCTS DESCRIBED HEREIN AND THIS DOCUMENT ARE SUBJECT TO SPECIFIC DISCLAIMERS, SET FORTH AT www.vishay.com/doc?91000

REEL DIMENSIONS in millimeters

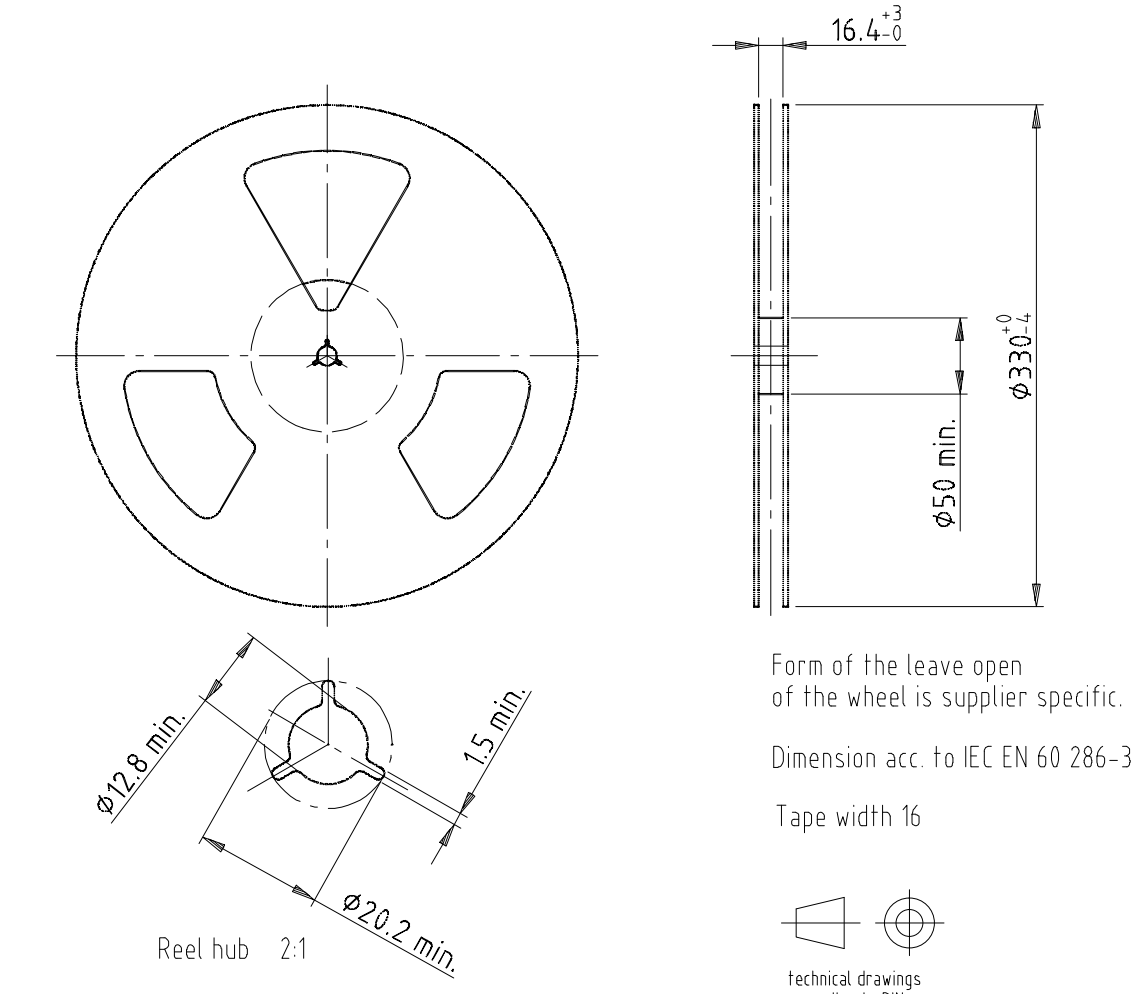

LEADER AND TRAILER DIMENSIONS in millimeters

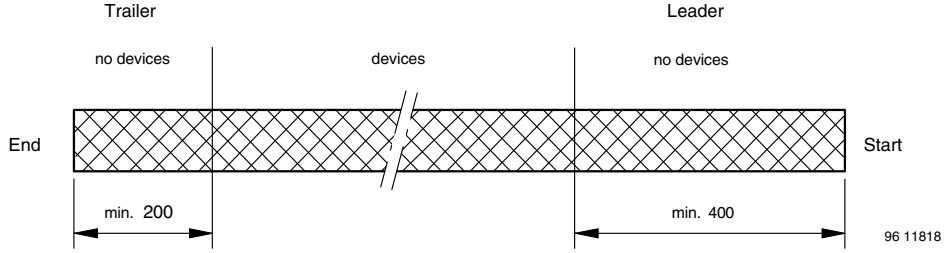

For technical questions, contact: consumersensors@vishay.com
THIS DOCUMENT IS SUBJECT TO CHANGE WITHOUT NOTICE. THE PRODUCTS DESCRIBED HEREIN AND THIS DOCUMENT ARE SUBJECT TO SPECIFIC DISCLAIMERS, SET FORTH AT www.vishay.com/doc?91000

REFLOW SOLDER PROFILE

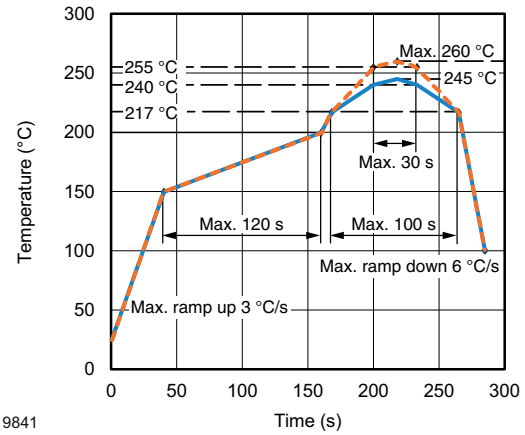

Fig. 10 - Lead (Pb)-free Reflow Solder Profile According to J-STD-020

DRYPACK

Devices are packed in moisture barrier bags (MBB) to prevent the products from moisture absorption during transportation and storage. Each bag contains a desiccant.

FLOOR LIFE

Floor life (time between soldering and removing from MBB) must not exceed the time indicated on MBB label:

Floor life: 72 h

Conditions: T_{amb} < 30 °C, RH < 60 %

Moisture sensitivity level 4, according to J-STD-020.

DRYING

In case of moisture absorption devices should be baked before soldering. Conditions see J-STD-020 or label. Devices taped on reel dry using recommended conditions 192 h at 40 °C (+ 5 °C), RH < 5 %.

For technical questions, contact: consumersensors@vishay.com
THIS DOCUMENT IS SUBJECT TO CHANGE WITHOUT NOTICE. THE PRODUCTS DESCRIBED HEREIN AND THIS DOCUMENT ARE SUBJECT TO SPECIFIC DISCLAIMERS, SET FORTH AT www.vishay.com/doc?91000

Disclaimer

ALL PRODUCT, PRODUCT SPECIFICATIONS AND DATA ARE SUBJECT TO CHANGE WITHOUT NOTICE TO IMPROVE RELIABILITY, FUNCTION OR DESIGN OR OTHERWISE.

Vishay Intertechnology, Inc., its affiliates, agents, and employees, and all persons acting on its or their behalf (collectively, “Vishay”), disclaim any and all liability for any errors, inaccuracies or incompleteness contained in any datasheet or in any other disclosure relating to any product.

Vishay makes no warranty, representation or guarantee regarding the suitability of the products for any particular purpose or the continuing production of any product. To the maximum extent permitted by applicable law, Vishay disclaims (i) any and all liability arising out of the application or use of any product, (ii) any and all liability, including without limitation special, consequential or incidental damages, and (iii) any and all implied warranties, including warranties of fitness for particular purpose, non-infringement and merchantability.

Statements regarding the suitability of products for certain types of applications are based on Vishay's knowledge of typical requirements that are often placed on Vishay products in generic applications. Such statements are not binding statements about the suitability of products for a particular application. It is the customer's responsibility to validate that a particular product with the properties described in the product specification is suitable for use in a particular application. Parameters provided in datasheets and / or specifications may vary in different applications and performance may vary over time. All operating parameters, including typical parameters, must be validated for each customer application by the customer's technical experts. Product specifications do not expand or otherwise modify Vishay's terms and conditions of purchase, including but not limited to the warranty expressed therein.

Hyperlinks included in this datasheet may direct users to third-party websites. These links are provided as a convenience and for informational purposes only. Inclusion of these hyperlinks does not constitute an endorsement or an approval by Vishay of any of the products, services or opinions of the corporation, organization or individual associated with the third-party website. Vishay disclaims any and all liability and bears no responsibility for the accuracy, legality or content of the third-party website or for that of subsequent links.

Vishay products are not designed for use in life-saving or life-sustaining applications or any application in which the failure of the Vishay product could result in personal injury or death unless specifically qualified in writing by Vishay. Customers using or selling Vishay products not expressly indicated for use in such applications do so at their own risk. Please contact authorized Vishay personnel to obtain written terms and conditions regarding products designed for such applications.

No license, express or implied, by estoppel or otherwise, to any intellectual property rights is granted by this document or by any conduct of Vishay. Product names and markings noted herein may be trademarks of their respective owners.

© 2026 VISHAY INTERTECHNOLOGY, INC. ALL RIGHTS RESERVED

THIS DOCUMENT IS SUBJECT TO CHANGE WITHOUT NOTICE. THE PRODUCTS DESCRIBED HEREIN AND THIS DOCUMENT ARE SUBJECT TO SPECIFIC DISCLAIMERS, SET FORTH AT www.vishay.com/doc?91000