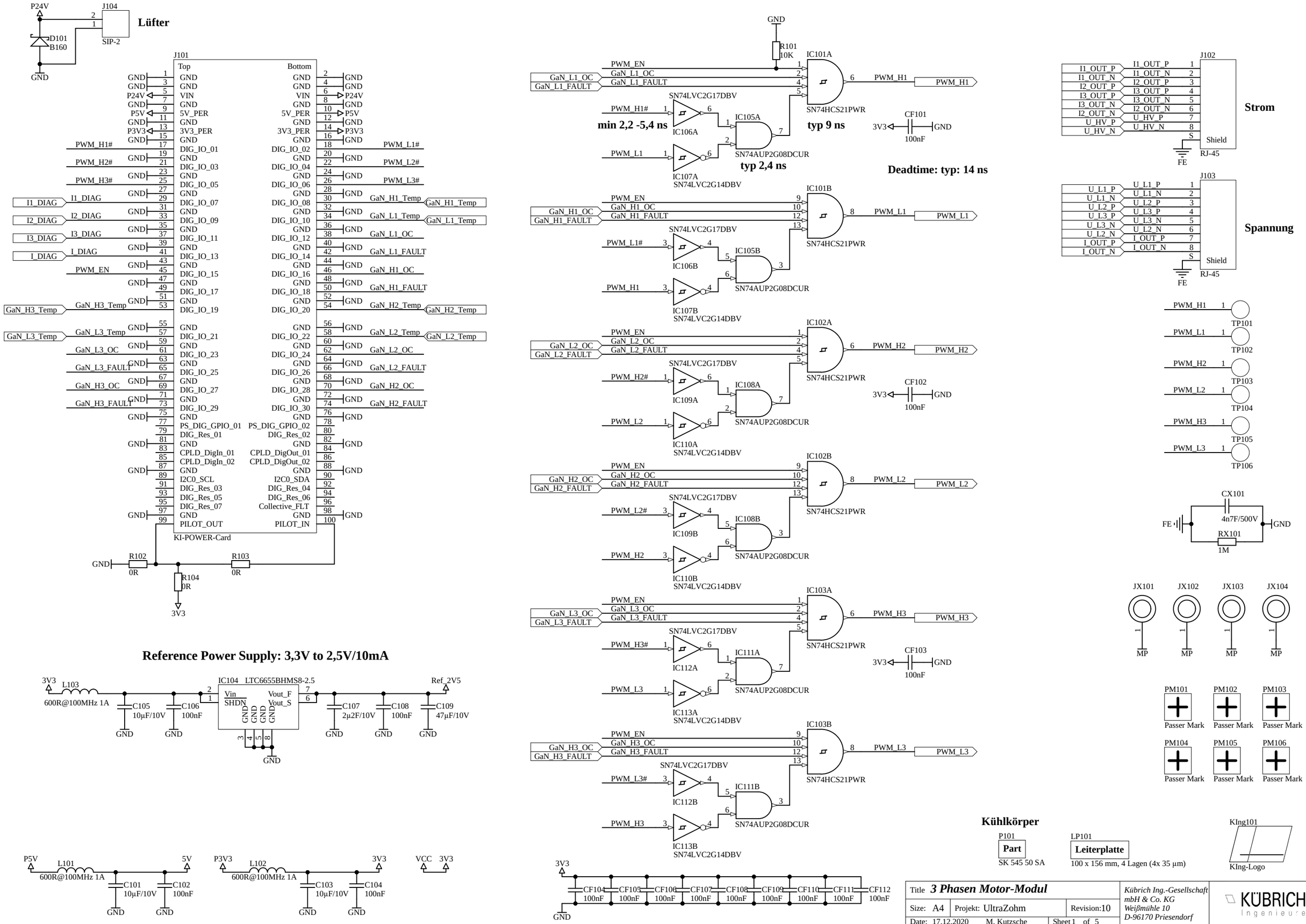
Lüfter
P24V
J104
SIP-2
D101
B160
GND
J101
Top
Bottom
KI-POWER-Card
PWM_H1#
PWM_H2#
PWM_H3#
I1_DIAG
I2_DIAG
I3_DIAG
I_DIAG
PWM_EN
GaN_H3_Temp
GaN_L3_Temp
GaN_L3_OC
GaN_L3_FAULT
GaN_H3_OC
GaN_H3_FAULT
PWM_L1#
PWM_L2#
PWM_L3#
GaN_H1_Temp
GaN_L1_Temp
GaN_L1_OC
GaN_L1_FAULT
GaN_H1_OC
GaN_H1_FAULT
GaN_H2_Temp
GaN_L2_Temp
GaN_L2_OC
GaN_L2_FAULT
GaN_H2_OC
GaN_H2_FAULT
R102
0R
R103
0R
R104
0R
3V3
Reference Power Supply: 3,3V to 2,5V/10mA
IC104 LTC6655BHMS8-2.5
Vin
SHDN
Vout_F
Vout_S
L103
600R@100MHz 1A
C105
10µF/10V
C106
100nF
C107
2µ2F/10V
C108
100nF
C109
47µF/10V
Ref_2V5
P5V
L101
5V
C101
10µF/10V
C102
100nF
P3V3
L102
C103
10µF/10V
C104
100nF
VCC
R101
10K
IC101A
IC101B
IC102A
IC102B
IC103A
IC103B
SN74HCS21PWR
SN74LVC2G17DBV
SN74LVC2G14DBV
SN74AUP2G08DCUR
IC106A
IC107A
IC105A
IC106B
IC107B
IC105B
IC109A
IC110A
IC108A
IC109B
IC110B
IC108B
IC112A
IC113A
IC111A
IC112B
IC113B
IC111B
min 2,2 -5,4 ns
typ 9 ns
typ 2,4 ns
Deadtime: typ: 14 ns
CF101
CF102
CF103
100nF
CF104
CF105
CF106
CF107
CF108
CF109
CF110
CF111
CF112
J102
Strom
RJ-45
Shield
FE
J103
Spannung
TP101
TP102
TP103
TP104
TP105
TP106
CX101
4n7F/500V
RX101
1M
JX101
JX102
JX103
JX104
MP
PM101
PM102
PM103
PM104
PM105
PM106
Passer Mark
Kühlkörper
P101
Part
SK 545 50 SA
LP101
Leiterplatte
100 x 156 mm, 4 Lagen (4x 35 µm)
KIng101
KIng-Logo
Title 3 Phasen Motor-Modul
Size: A4
Projekt: UltraZohm
Revision:10
Date: 17.12.2020
M. Kutzsche
Sheet 1 of 5
File: S:\Jobs\1166V10\Designs\Schematics\1166V10-1.SchDoc
Kübrich Ing.-Gesellschaft mbH & Co. KG
Weißmühle 10
D-96170 Priesendorf
KÜBRICH
Ingenieure

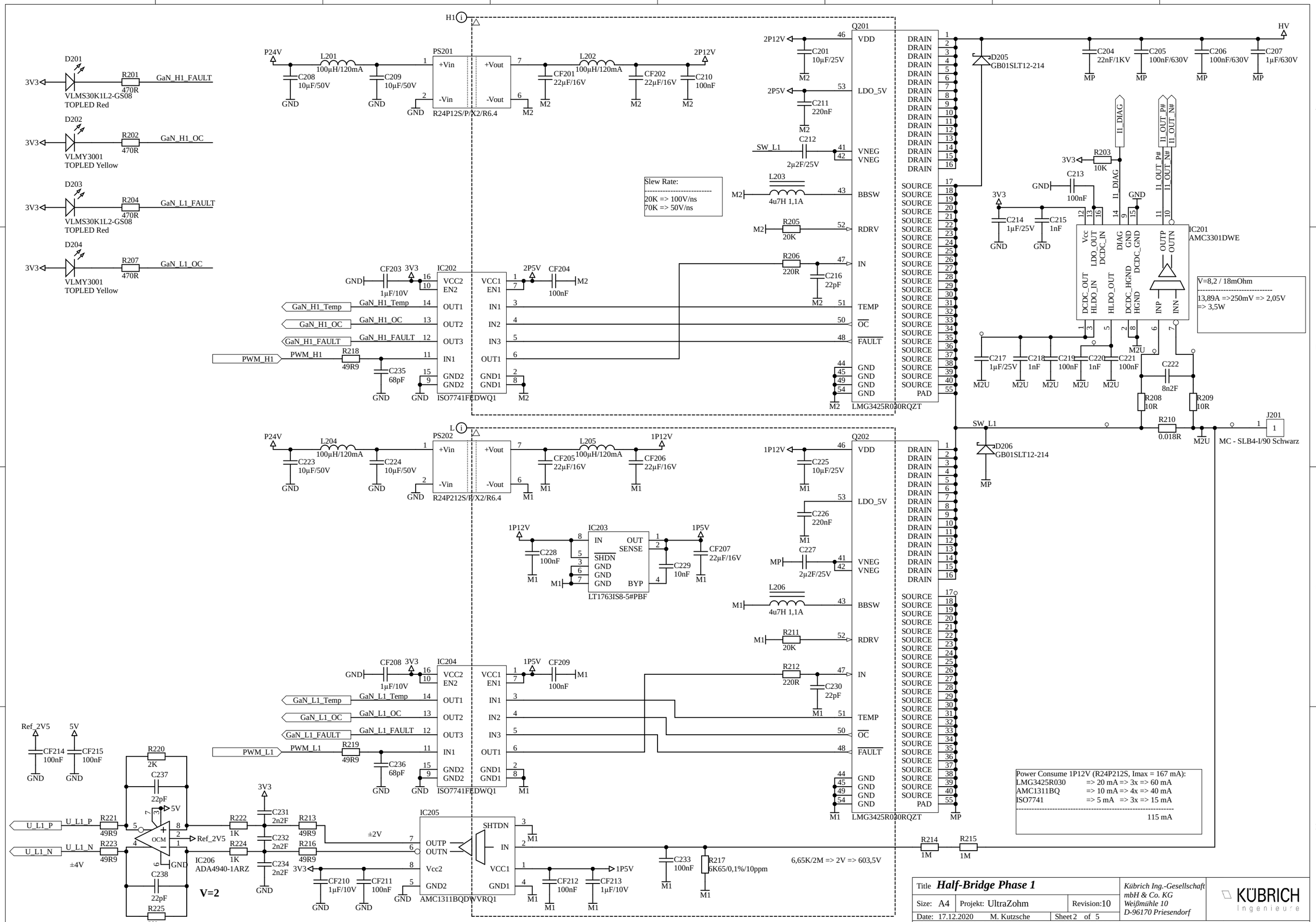
D201
VLMS30K1L2-GS08
TOPLED Red
D202
VLMY3001
TOPLED Yellow
D203
VLMS30K1L2-GS08
TOPLED Red
D204
VLMY3001
TOPLED Yellow
R201 470R GaN_H1_FAULT
R202 470R GaN_H1_OC
R204 470R GaN_L1_FAULT
R207 470R GaN_L1_OC
3V3
H1
PS201
R24P12S/P/X2/R6.4
P24V
L201 100µH/120mA
C208 10µF/50V
C209 10µF/50V
L202 100µH/120mA
CF201 22µF/16V
CF202 22µF/16V
C210 100nF
2P12V
Q201
LMG3425R030RQZT
C201 10µF/25V
2P5V
C211 220nF
C212 2µF/25V
SW_L1
L203 4u7H 1,1A
R205 20K
R206 220R
C216 22pF
Slew Rate:
20K => 100V/ns
70K => 50V/ns
D205 GB01SLT12-214
HV
C204 22nF/1KV
C205 100nF/630V
C206 100nF/630V
C207 1µF/630V
I1_DIAG
I1_OUT_P#
I1_OUT_N#
R203 10K
C213 100nF
C214 1µF/25V
C215 1nF
IC201
AMC3301DWE
V=8,2 / 18mOhm
13,89A =>250mV => 2,05V
=> 3,5W
C217 1µF/25V
C218 1nF
C219 100nF
C220 1nF
C221 100nF
C222 8n2F
R208 10R
R209 10R
R210 0.018R
J201
MC - SLB4-I/90 Schwarz
D206 GB01SLT12-214
IC202
ISO7741FEDWQ1
CF203 1µF/10V
CF204 100nF
GaN_H1_Temp
GaN_H1_OC
GaN_H1_FAULT
PWM_H1
R218 49R9
C235 68pF
L
PS202
R24P212S/P/X2/R6.4
L204 100µH/120mA
C223 10µF/50V
C224 10µF/50V
L205 100µH/120mA
CF205 22µF/16V
CF206 22µF/16V
1P12V
Q202
LMG3425R030RQZT
C225 10µF/25V
C226 220nF
C227 2µF/25V
L206 4u7H 1,1A
R211 20K
R212 220R
C230 22pF
IC203
LT1763IS8-5#PBF
C228 100nF
C229 10nF
CF207 22µF/16V
1P5V
IC204
ISO7741FEDWQ1
CF208 1µF/10V
CF209 100nF
GaN_L1_Temp
GaN_L1_OC
GaN_L1_FAULT
PWM_L1
R219 49R9
C236 68pF
Ref_2V5
5V
CF214 100nF
CF215 100nF
R220 2K
C237 22pF
C238 22pF
R225 2K
U_L1_P
U_L1_N
R221 49R9
R223 49R9
±4V
IC206
ADA4940-1ARZ
V=2
R222 1K
R224 1K
R213 49R9
R216 49R9
C231 2n2F
C232 2n2F
C234 2n2F
±2V
IC205
AMC1311BQDWVRQ1
CF210 1µF/10V
CF211 100nF
CF212 100nF
CF213 1µF/10V
C233 100nF
R217 6K65/0,1%/10ppm
6,65K/2M => 2V => 603,5V
R214 1M
R215 1M
Power Consume 1P12V (R24P212S, Imax = 167 mA):
LMG3425R030 => 20 mA => 3x => 60 mA
AMC1311BQ => 10 mA => 4x => 40 mA
ISO7741 => 5 mA => 3x => 15 mA
115 mA
Title Half-Bridge Phase 1
Size: A4
Projekt: UltraZohm
Revision:10
Date: 17.12.2020
M. Kutzsche
Sheet 2 of 5
File: S:\Jobs\1166V10\Designs\Schematics\1166V10-2.SchDoc
Kübrich Ing.-Gesellschaft mbH & Co. KG
Weißmühle 10
D-96170 Priesendorf
KÜBRICH Ingenieure

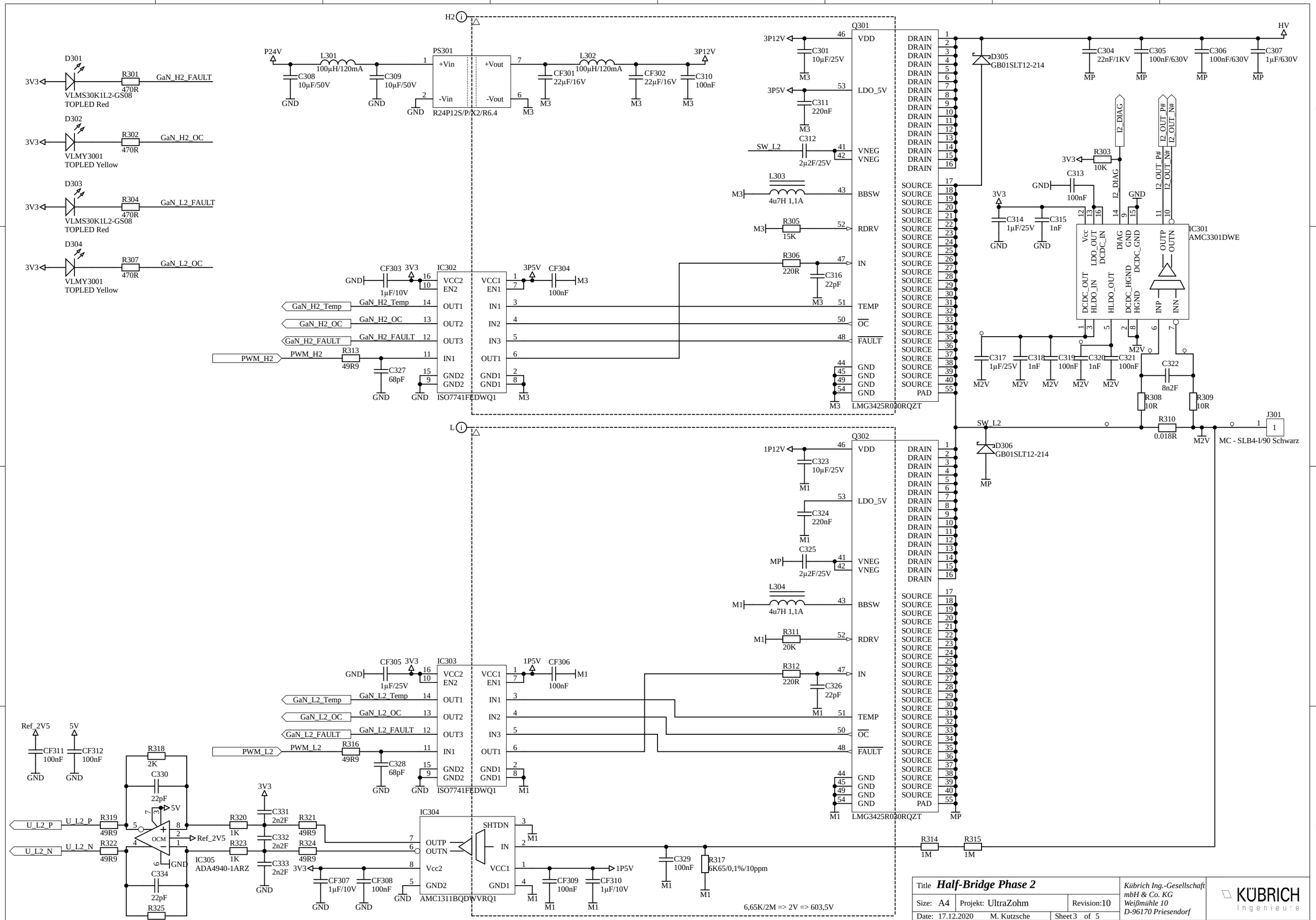

Title	***Half-Bridge Phase 2***		*Kübrich Ing.-Gesellschaft mbH & Co. KG Weißmühle 10 D-96170 Priesendorf*
Size: A4	Projekt: UltraZohm	Revision:10	
Date: 17.12.2020	M. Kutzsche	Sheet 3 of 5	
File:	S:\Jobs\1166V10\Designs\Schematics\1166V10-3.SchDoc		

KÜBRICH Ingenieure

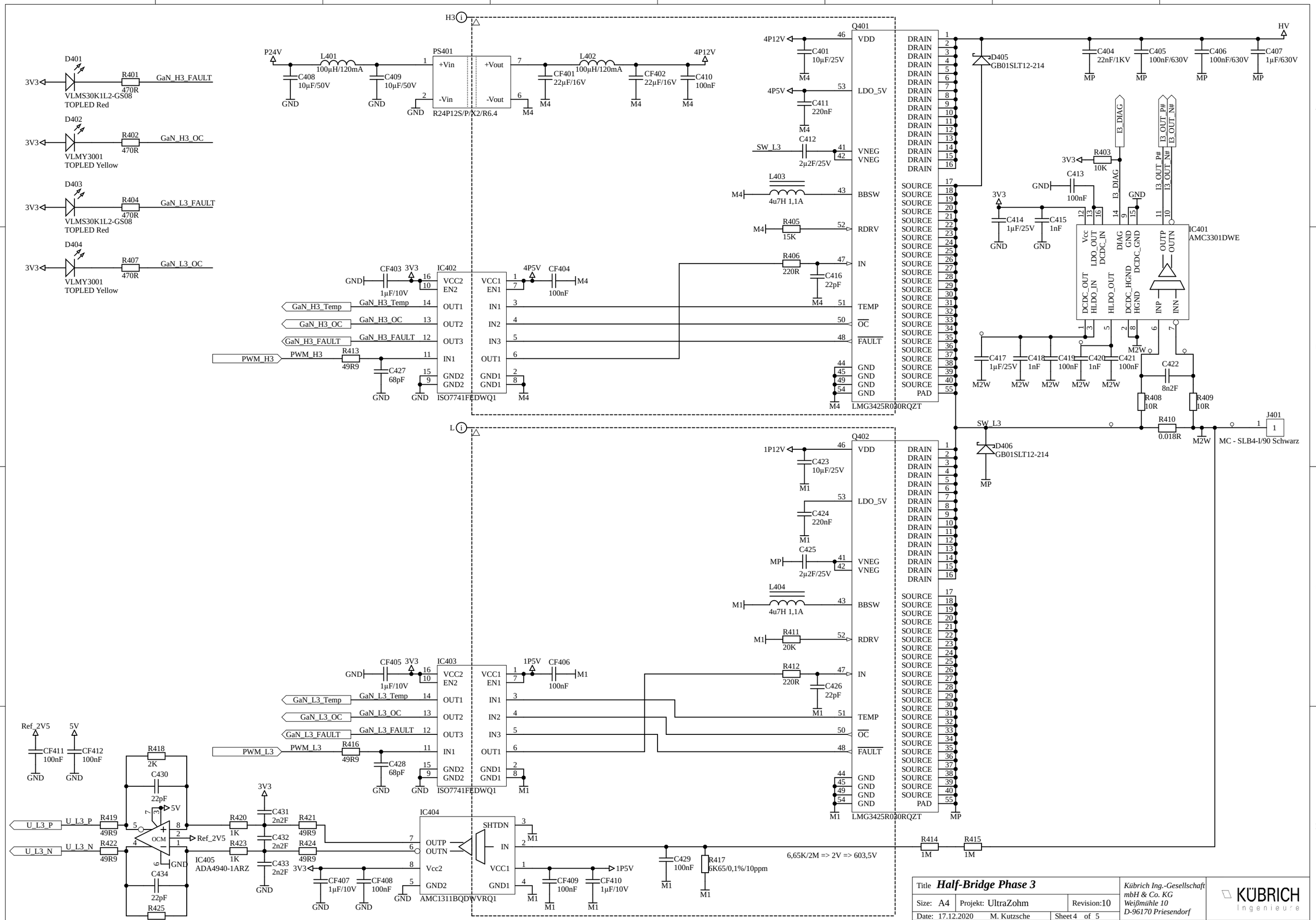
D401
3V3
R401
470R
GaN_H3_FAULT
VLMS30K1L2-GS08
TOPLED Red
D402
R402
GaN_H3_OC
VLMY3001
TOPLED Yellow
D403
R404
GaN_L3_FAULT
VLMS30K1L2-GS08
TOPLED Red
D404
R407
GaN_L3_OC
VLMY3001
TOPLED Yellow
H3
P24V
L401
100µH/120mA
C408
10µF/50V
C409
10µF/50V
PS401
+Vin
-Vin
+Vout
-Vout
R24P12S/P/X2/R6.4
L402
100µH/120mA
CF401
22µF/16V
CF402
22µF/16V
C410
100nF
4P12V
Q401
VDD
LDO_5V
VNEG
BBSW
RDRV
IN
TEMP
OC
FAULT
GND
PAD
LMG3425R030RQZT
C401
10µF/25V
4P5V
C411
220nF
C412
2µ2F/25V
SW_L3
L403
4u7H 1,1A
R405
15K
R406
220R
C416
22pF
D405
GB01SLT12-214
HV
C404
22nF/1KV
C405
100nF/630V
C406
100nF/630V
C407
1µF/630V
I3_DIAG
I3_OUT_P#
I3_OUT_N#
R403
10K
C413
100nF
C414
1µF/25V
C415
1nF
IC401
AMC3301DWE
Vcc
LDO_OUT
DCDC_IN
DIAG
GND
DCDC_GND
OUTP
OUTN
DCDC_OUT
HLDO_IN
HLDO_OUT
DCDC_HGND
HGND
INP
INN
C417
1µF/25V
C418
1nF
C419
100nF
C420
1nF
C421
100nF
C422
8n2F
R408
10R
R409
10R
R410
0.018R
J401
MC - SLB4-I/90 Schwarz
D406
GB01SLT12-214
CF403
1µF/10V
IC402
VCC2
EN2
VCC1
EN1
OUT1
OUT2
OUT3
IN1
GND2
GND1
ISO7741FEDWQ1
4P5V
CF404
100nF
GaN_H3_Temp
GaN_H3_OC
GaN_H3_FAULT
PWM_H3
R413
49R9
C427
68pF
L
Q402
1P12V
C423
10µF/25V
C424
220nF
C425
2µ2F/25V
L404
4u7H 1,1A
R411
20K
R412
220R
C426
22pF
CF405
1µF/10V
IC403
1P5V
CF406
100nF
GaN_L3_Temp
GaN_L3_OC
GaN_L3_FAULT
PWM_L3
R416
49R9
C428
68pF
ISO7741FEDWQ1
Ref_2V5
5V
CF411
100nF
CF412
100nF
R418
2K
C430
22pF
C434
22pF
R425
2K
U_L3_P
U_L3_N
R419
49R9
R422
49R9
OCM
IC405
ADA4940-1ARZ
R420
1K
R423
1K
C431
2n2F
C432
2n2F
C433
2n2F
R421
49R9
R424
49R9
IC404
SHTDN
OUTP
OUTN
IN
Vcc2
VCC1
GND2
GND1
AMC1311BQDWVRQ1
CF407
1µF/10V
CF408
100nF
CF409
100nF
CF410
1µF/10V
C429
100nF
R417
6K65/0,1%/10ppm
6,65K/2M => 2V => 603,5V
R414
1M
R415
1M
Title Half-Bridge Phase 3
Size: A4
Projekt: UltraZohm
Revision:10
Date: 17.12.2020
M. Kutzsche
Sheet 4 of 5
File: S:\Jobs\1166V10\Designs\Schematics\1166V10-4.SchDoc
Kübrich Ing.-Gesellschaft mbH & Co. KG
Weißmühle 10
D-96170 Priesendorf
KÜBRICH Ingenieure

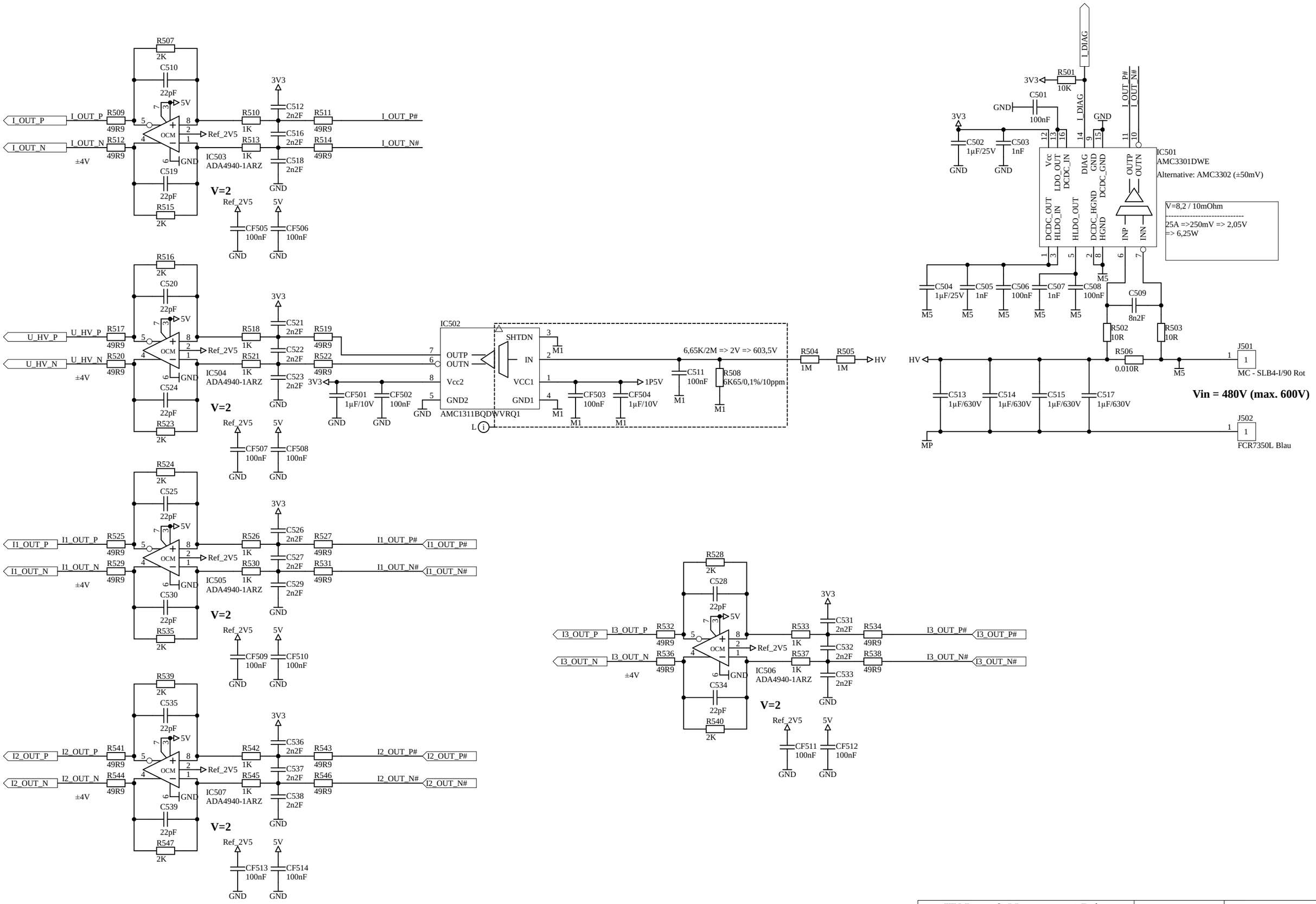

Title	***HV-Input & Measurement-Driver***		*Kübrich Ing.-Gesellschaft mbH & Co. KG Weißmühle 10 D-96170 Priesendorf*
Size: A4	Projekt: UltraZohm	Revision:10	
Date: 17.12.2020	M. Kutzsche	Sheet 5 of 5	
File: S:\Jobs\1166V10\Designs\Schematics\1166V10-5.SchDoc			

KÜBRICH Ingenieure