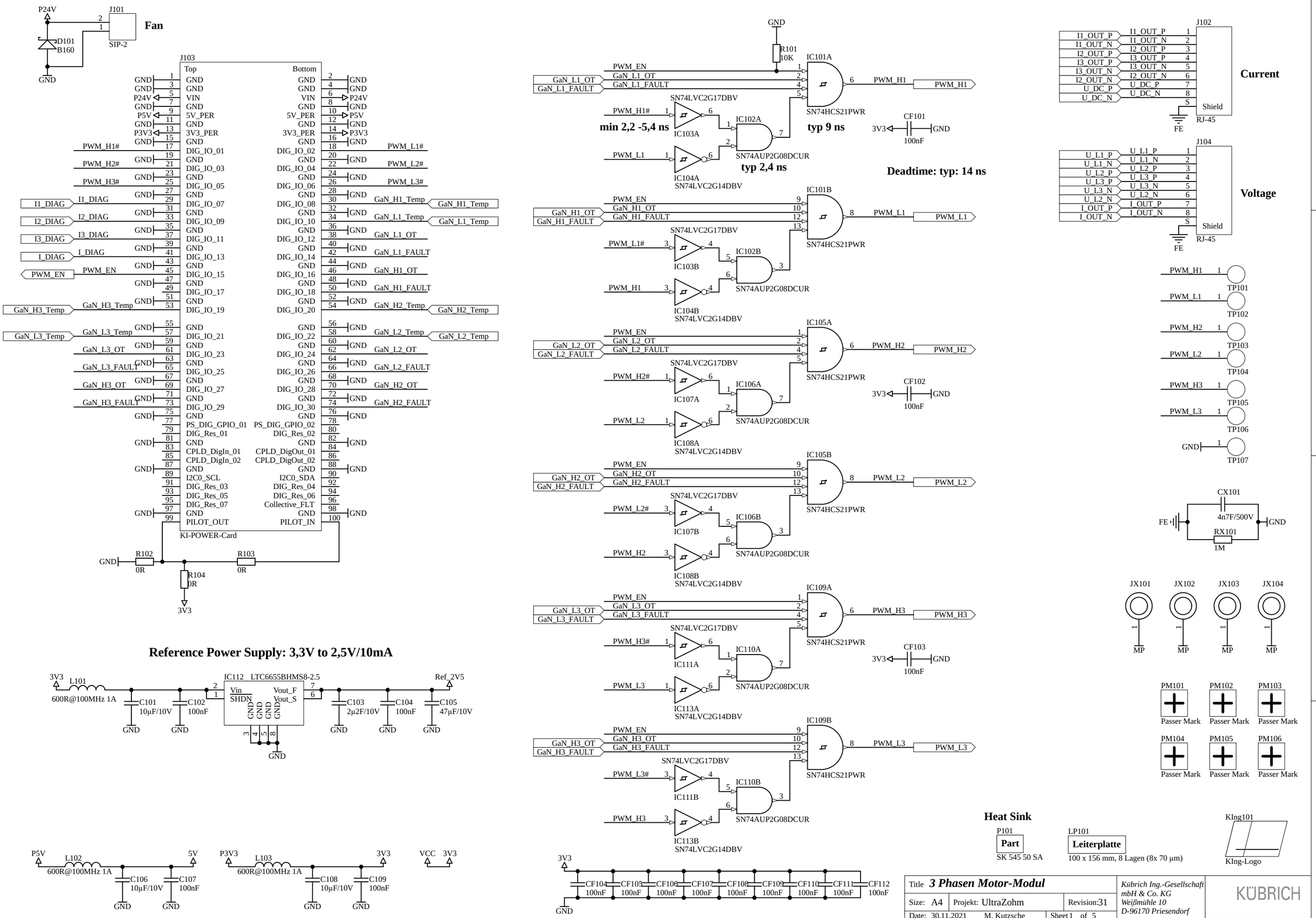
Fan
P24V
J101
SIP-2
D101
B160
GND
J103
Top
Bottom
KI-POWER-Card
R102
0R
R103
0R
R104
0R
3V3
Reference Power Supply: 3,3V to 2,5V/10mA
3V3
L101
600R@100MHz 1A
C101
10µF/10V
C102
100nF
IC112 LTC6655BHMS8-2.5
Vin
SHDN
Vout_F
Vout_S
Ref_2V5
C103
2µ2F/10V
C104
100nF
C105
47µF/10V
P5V
L102
600R@100MHz 1A
5V
C106
10µF/10V
C107
100nF
P3V3
L103
600R@100MHz 1A
3V3
C108
10µF/10V
C109
100nF
VCC 3V3
GND
R101
10K
IC101A
SN74HCS21PWR
PWM_H1
IC101B
PWM_L1
IC105A
PWM_H2
IC105B
PWM_L2
IC109A
PWM_H3
IC109B
PWM_L3
SN74LVC2G17DBV
IC103A
IC102A
SN74AUP2G08DCUR
IC104A
SN74LVC2G14DBV
min 2,2 -5,4 ns
typ 9 ns
typ 2,4 ns
CF101
CF102
CF103
100nF
Deadtime: typ: 14 ns
IC103B
IC102B
IC104B
IC107A
IC106A
IC108A
IC107B
IC106B
IC108B
IC111A
IC110A
IC113A
IC111B
IC110B
IC113B
CF104
CF105
CF106
CF107
CF108
CF109
CF110
CF111
CF112
J102
Current
I1_OUT_P
I1_OUT_N
I2_OUT_P
I3_OUT_P
I3_OUT_N
I2_OUT_N
U_DC_P
U_DC_N
Shield
RJ-45
FE
J104
Voltage
U_L1_P
U_L1_N
U_L2_P
U_L3_P
U_L3_N
U_L2_N
I_OUT_P
I_OUT_N
TP101
TP102
TP103
TP104
TP105
TP106
TP107
CX101
4n7F/500V
RX101
1M
JX101
JX102
JX103
JX104
MP
PM101
PM102
PM103
PM104
PM105
PM106
Passer Mark
Heat Sink
P101
Part
SK 545 50 SA
LP101
Leiterplatte
100 x 156 mm, 8 Lagen (8x 70 µm)
KIng101
KIng-Logo
Title 3 Phasen Motor-Modul
Size: A4
Projekt: UltraZohm
Revision:31
Date: 30.11.2021
M. Kutzsche
Sheet 1 of 5
File: S:\Jobs\1166V31\Designs\Schematics\1166V31-1.SchDoc
Kübrich Ing.-Gesellschaft mbH & Co. KG
Weißmühle 10
D-96170 Priesendorf
KÜBRICH

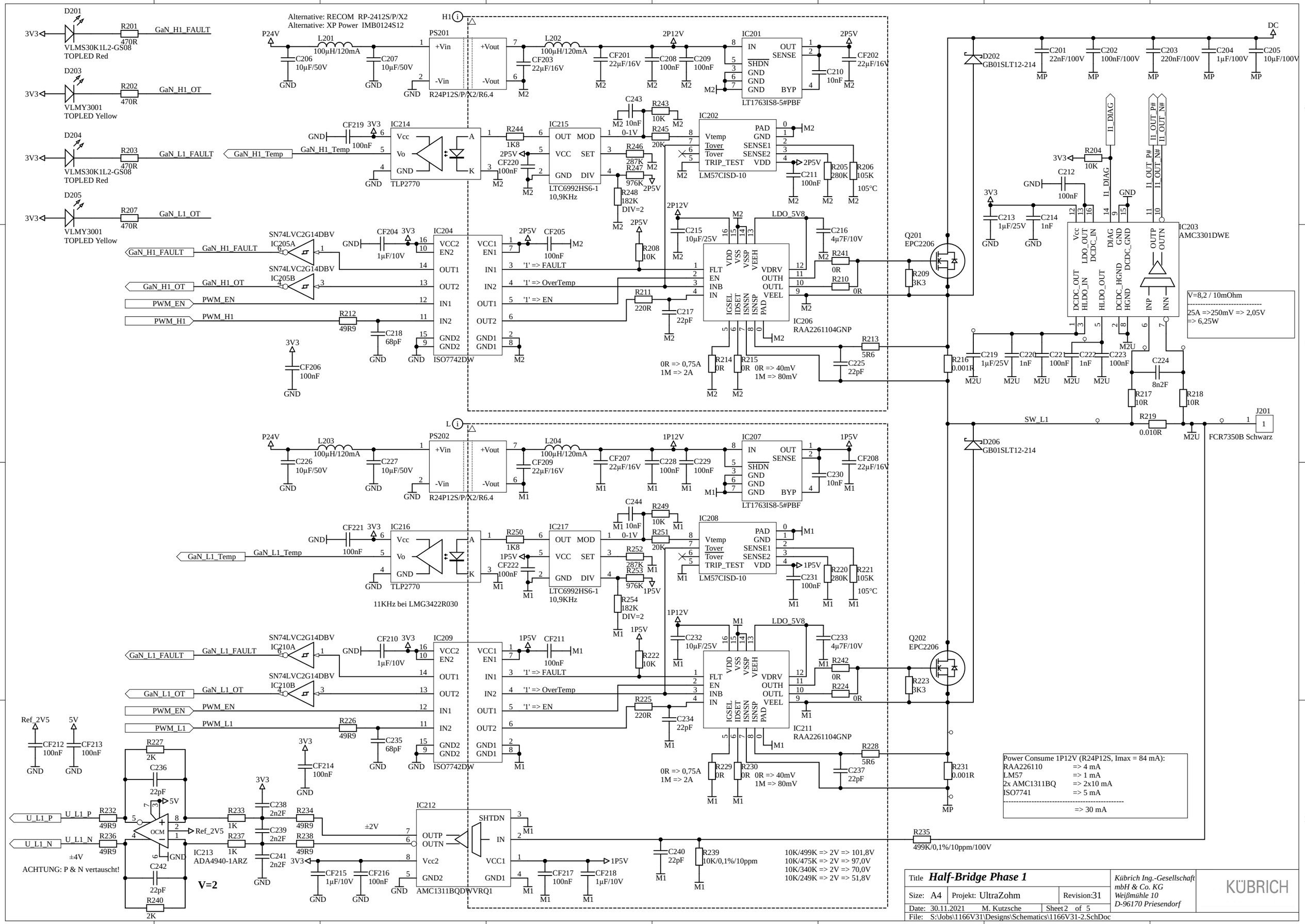
Alternative: RECOM RP-2412S/P/X2
Alternative: XP Power IMB0124S12
D201 VLMS30K1L2-GS08 TOPLED Red
D203 VLMY3001 TOPLED Yellow
D204 VLMS30K1L2-GS08 TOPLED Red
D205 VLMY3001 TOPLED Yellow
3V3
R201 470R
R202 470R
R203 470R
R207 470R
GaN_H1_FAULT
GaN_H1_OT
GaN_L1_FAULT
GaN_L1_OT
GaN_H1_Temp
GaN_L1_Temp
PWM_EN
PWM_H1
PWM_L1
P24V
L201 100µH/120mA
L202 100µH/120mA
L203 100µH/120mA
L204 100µH/120mA
C206 10µF/50V
C207 10µF/50V
C226 10µF/50V
C227 10µF/50V
PS201
PS202
+Vin
-Vin
+Vout
-Vout
R24P12S/P/X2/R6.4
CF203 22µF/16V
CF209 22µF/16V
CF201 22µF/16V
CF207 22µF/16V
C208 100nF
C209 100nF
C228 100nF
C229 100nF
2P12V
1P12V
IC201
IC207
IN
OUT
SHDN
GND
SENSE
BYP
LT1763IS8-5#PBF
2P5V
1P5V
CF202 22µF/16V
CF208 22µF/16V
C210 10nF
C230 10nF
DC
D202 GB01SLT12-214
D206 GB01SLT12-214
C201 22nF/100V
C202 100nF/100V
C203 220nF/100V
C204 1µF/100V
C205 10µF/100V
CF219 100nF
CF221 100nF
IC214
IC216
Vcc
Vo
GND
TLP2770
R244 1K8
R250 1K8
IC215
IC217
OUT MOD
VCC SET
GND DIV
LTC6992HS6-1
10,9KHz
11KHz bei LMG3422R030
CF220 100nF
CF222 100nF
C243 10nF
C244 10nF
R243 10K
R249 10K
R245 20K
R251 20K
0-1V
R246 287K
R252 287K
R247 976K
R253 976K
R248 182K DIV=2
R254 182K DIV=2
IC202
IC208
Vtemp
Tover
TRIP_TEST
PAD
SENSE1
SENSE2
VDD
LM57CISD-10
C211 100nF
C231 100nF
R205 280K
R206 105K
R220 280K
R221 105K
105°C
I1_DIAG
I1_OUT_P#
I1_OUT_N#
R204 10K
C212 100nF
C213 1µF/25V
C214 1nF
IC203 AMC3301DWE
Vcc
LDO_OUT
DCDC_IN
DIAG
GND
DCDC_GND
DCDC_OUT
HLDO_IN
HLDO_OUT
DCDC_HGND
HGND
OUTP
OUTN
INP
INN
V=8,2 / 10mOhm
25A =>250mV => 2,05V
=> 6,25W
SN74LVC2G14DBV
IC205A
IC205B
CF204 1µF/10V
CF205 100nF
IC204
ISO7742DW
VCC2
EN2
OUT1
OUT2
IN1
IN2
GND2
VCC1
EN1
IN1
IN2
OUT1
OUT2
GND1
'1' => FAULT
'1' => OverTemp
'1' => EN
R208 10K
R222 10K
R212 49R9
R226 49R9
C218 68pF
C235 68pF
CF206 100nF
CF214 100nF
C215 10µF/25V
C232 10µF/25V
LDO_5V8
C216 4µF/10V
C233 4µF/10V
R241 0R
R210 0R
R242 0R
R224 0R
Q201 EPC2206
Q202 EPC2206
R209 3K3
R223 3K3
IC206 RAA2261104GP
IC211 RAA2261104GP
FLT
EN
INB
IN
VDD
VSS
VSSP
VEEH
VDRV
OUTH
OUTL
VEEL
IGSEL
IDSET
ISNSN
ISNSP
PAD
R211 220R
R225 220R
C217 22pF
C234 22pF
R213 5R6
R228 5R6
C225 22pF
C237 22pF
R214 0R
R215 0R
R229 0R
R230 0R
0R => 0,75A
1M => 2A
0R => 40mV
1M => 80mV
R216 0.001R
R231 0.001R
C219 1µF/25V
C220 1nF
C221 100nF
C222 1nF
C223 100nF
C224 8n2F
R217 10R
R218 10R
R219 0.010R
SW_L1
J201 FCR7350B Schwarz
R235 499K/0,1%/10ppm/100V
Power Consume 1P12V (R24P12S, Imax = 84 mA):
RAA226110 => 4 mA
LM57 => 1 mA
2x AMC1311BQ => 2x10 mA
ISO7741 => 5 mA
=> 30 mA
Ref_2V5
5V
CF212 100nF
CF213 100nF
R227 2K
R240 2K
C236 22pF
C242 22pF
U_L1_P
U_L1_N
R232 49R9
R236 49R9
±4V
ACHTUNG: P & N vertauscht!
IC213 ADA4940-1ARZ
OCM
V=2
R233 1K
R237 1K
R234 49R9
R238 49R9
C238 2n2F
C239 2n2F
C241 2n2F
±2V
IC212
AMC1311BQDWVRQ1
SHTDN
IN
VCC1
GND1
GND2
CF215 1µF/10V
CF216 100nF
CF217 100nF
CF218 1µF/10V
C240 22pF
R239 10K/0,1%/10ppm
10K/499K => 2V => 101,8V
10K/475K => 2V => 97,0V
10K/340K => 2V => 70,0V
10K/249K => 2V => 51,8V
Title Half-Bridge Phase 1
Size: A4
Projekt: UltraZohm
Revision:31
Date: 30.11.2021
M. Kutzsche
Sheet 2 of 5
File: S:\Jobs\1166V31\Designs\Schematics\1166V31-2.SchDoc
Kübrich Ing.-Gesellschaft mbH & Co. KG
Weißmühle 10
D-96170 Priesendorf
KÜBRICH

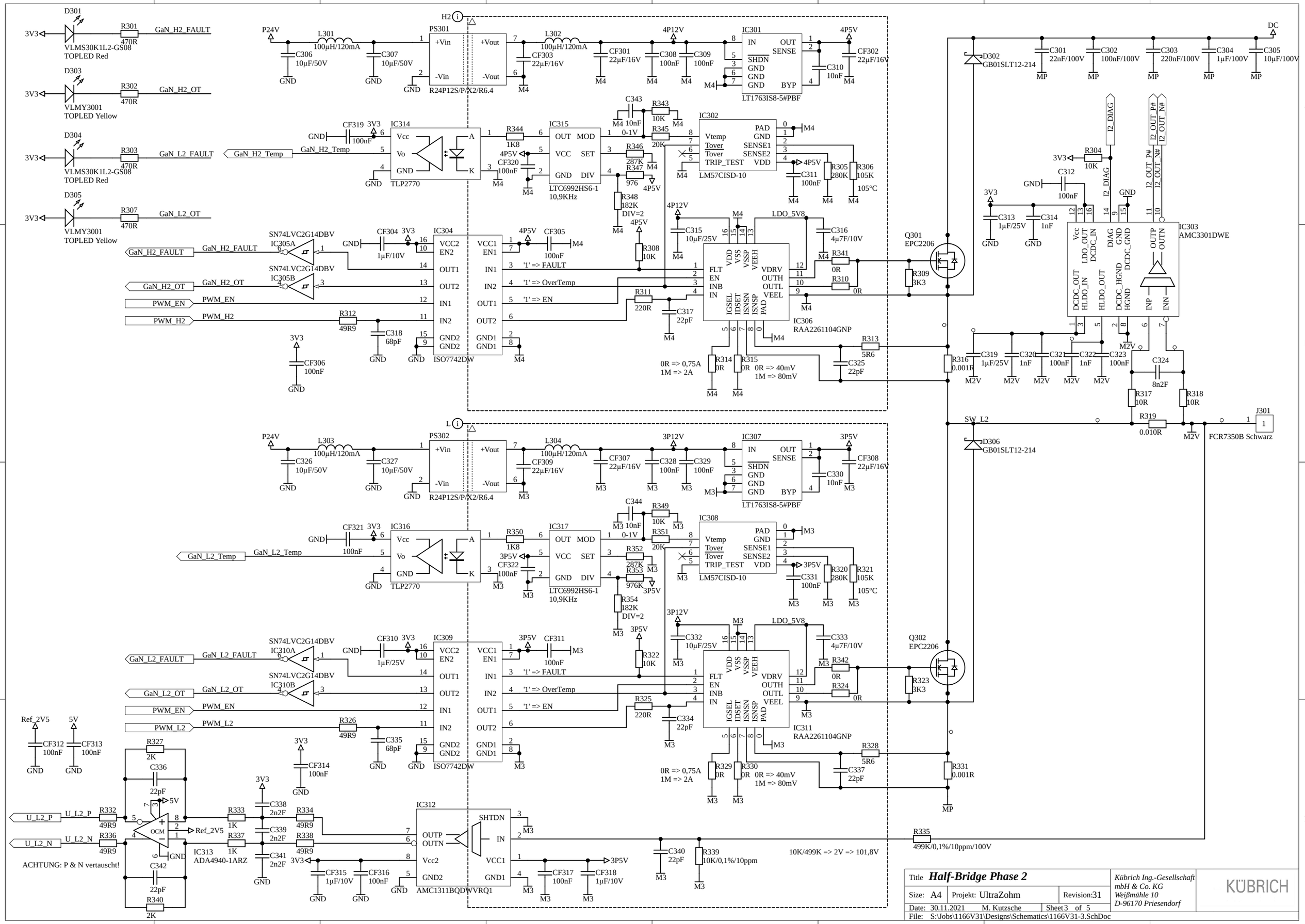

Title **Half-Bridge Phase 2**		*Kübrich Ing.-Gesellschaft mbH & Co. KG Weißmühle 10 D-96170 Priesendorf*
Size: A4	Projekt: UltraZohm	Revision:31
Date: 30.11.2021	M. Kutzsche	Sheet 3 of 5
File: S:\Jobs\1166V31\Designs\Schematics\1166V31-3.SchDoc		KÜBRICH

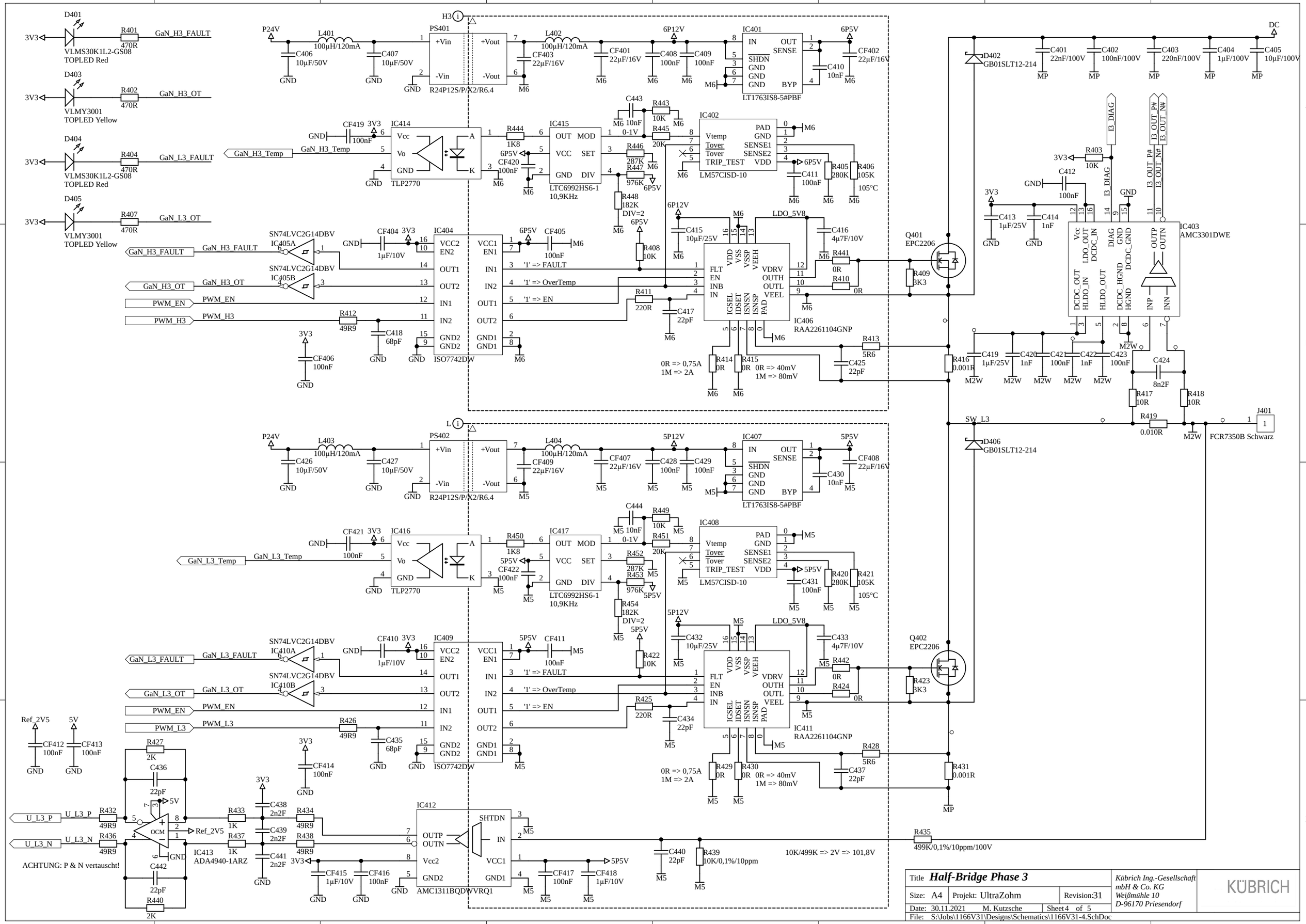
D401
VLMS30K1L2-GS08
TOPLED Red
D403
VLMY3001
TOPLED Yellow
D404
VLMS30K1L2-GS08
TOPLED Red
D405
VLMY3001
TOPLED Yellow
R401 470R
R402 470R
R404 470R
R407 470R
GaN_H3_FAULT
GaN_H3_OT
GaN_L3_FAULT
GaN_L3_OT
PS401
R24P12S/P/X2/R6.4
IC401
LT1763IS8-5#PBF
IC402
LM57CISD-10
IC414
TLP2770
IC415
LTC6992HS6-1
10,9KHz
IC404
ISO7742DW
IC405A
IC405B
SN74LVC2G14DBV
IC406
RAA2261104GNP
Q401
EPC2206
D402
GB01SLT12-214
IC403
AMC3301DWE
J401
FCR7350B Schwarz
D406
GB01SLT12-214
PS402
R24P12S/P/X2/R6.4
IC407
LT1763IS8-5#PBF
IC408
LM57CISD-10
IC416
TLP2770
IC417
LTC6992HS6-1
10,9KHz
IC409
ISO7742DW
IC410A
IC410B
SN74LVC2G14DBV
IC411
RAA2261104GNP
Q402
EPC2206
IC412
AMC1311BQDWVRQ1
IC413
ADA4940-1ARZ
ACHTUNG: P & N vertauscht!
10K/499K => 2V => 101,8V
Title Half-Bridge Phase 3
Size: A4
Projekt: UltraZohm
Revision:31
Date: 30.11.2021
M. Kutzsche
Sheet 4 of 5
File: S:\Jobs\1166V31\Designs\Schematics\1166V31-4.SchDoc
Kübrich Ing.-Gesellschaft mbH & Co. KG
Weißmühle 10
D-96170 Priesendorf
KÜBRICH

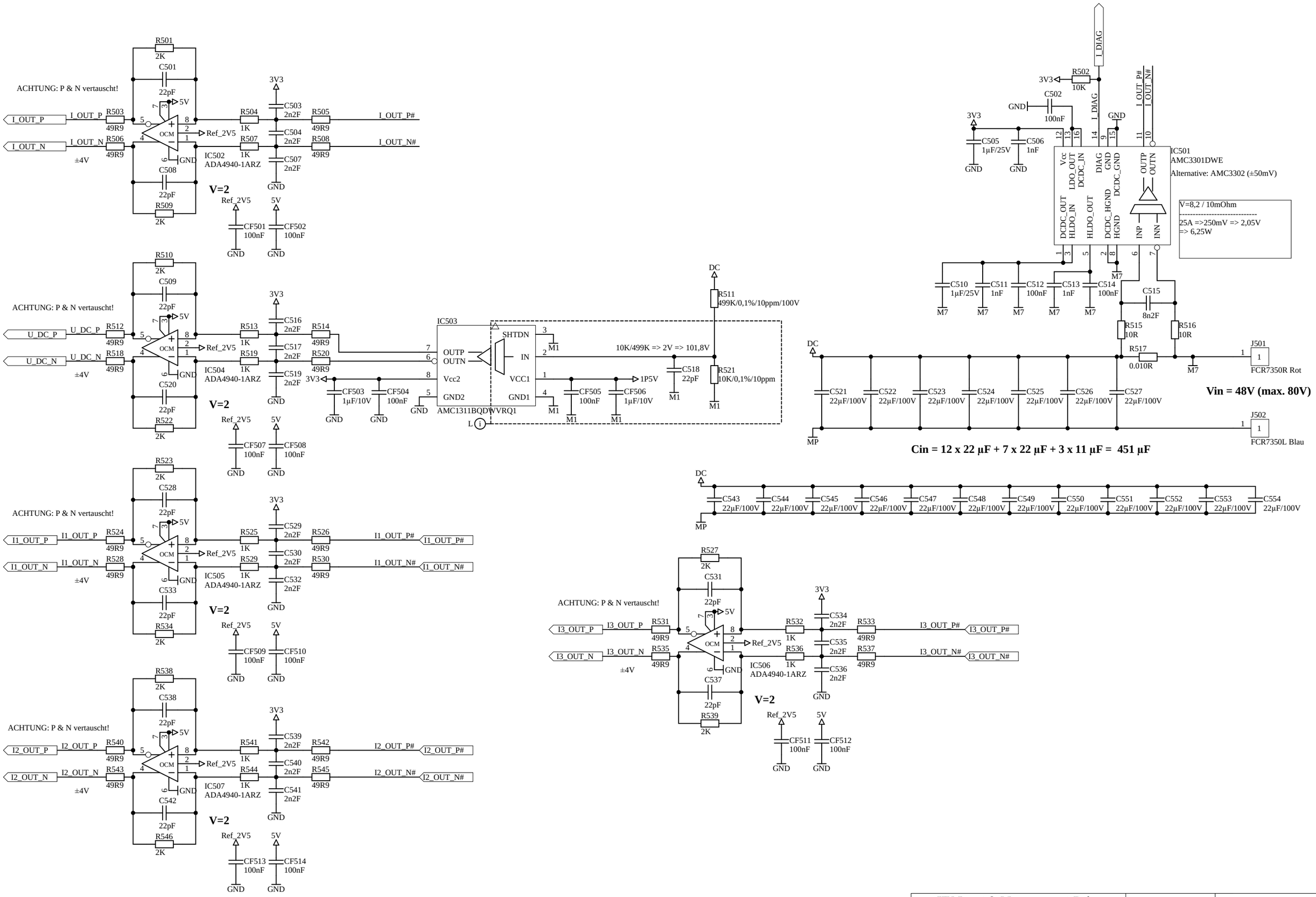

Title **HV-Input & Measurement-Driver**			*Kübrich Ing.-Gesellschaft mbH & Co. KG Weißmühle 10 D-96170 Priesendorf*
Size: A4	Projekt: UltraZohm	Revision:31	KÜBRICH
Date: 30.11.2021	M. Kutzsche	Sheet 5 of 5	
File: S:\Jobs\1166V31\Designs\Schematics\1166V31-5.SchDoc			