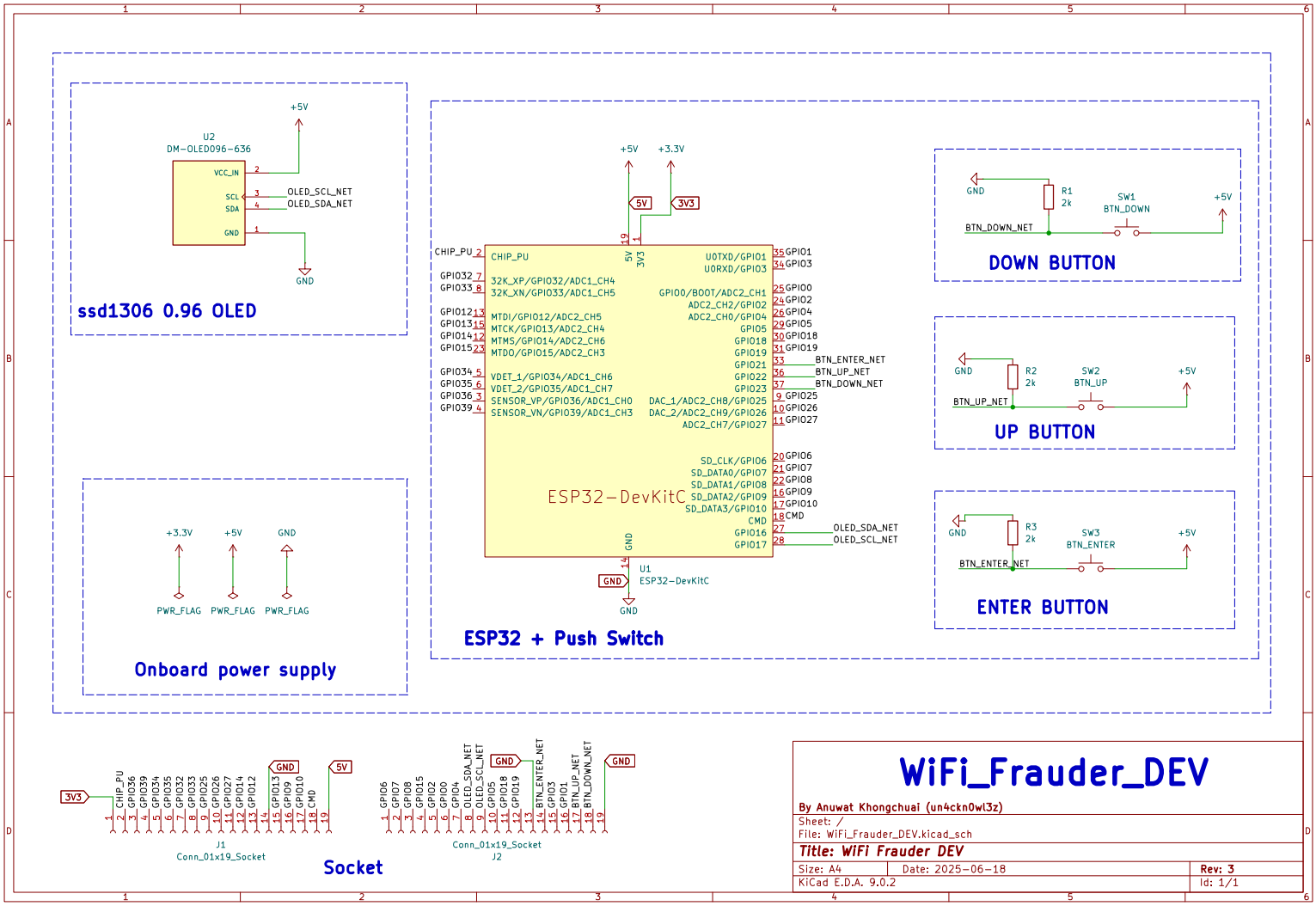
ssd1306 0.96 OLED
U2
DM-OLED096-636
VCC_IN
SCL
SDA
GND
OLED_SCL_NET
OLED_SDA_NET
+5V
GND
ESP32 + Push Switch
U1
ESP32-DevKitC
CHIP_PU
32K_XP/GPIO32/ADC1_CH4
32K_XN/GPIO33/ADC1_CH5
MTDI/GPIO12/ADC2_CH5
MTCK/GPIO13/ADC2_CH4
MTMS/GPIO14/ADC2_CH6
MTDO/GPIO15/ADC2_CH3
VDET_1/GPIO34/ADC1_CH6
VDET_2/GPIO35/ADC1_CH7
SENSOR_VP/GPIO36/ADC1_CH0
SENSOR_VN/GPIO39/ADC1_CH3
U0TXD/GPIO1
U0RXD/GPIO3
GPIO0/BOOT/ADC2_CH1
ADC2_CH2/GPIO2
ADC2_CH0/GPIO4
GPIO5
GPIO18
GPIO19
GPIO21
GPIO22
GPIO23
DAC_1/ADC2_CH8/GPIO25
DAC_2/ADC2_CH9/GPIO26
ADC2_CH7/GPIO27
SD_CLK/GPIO6
SD_DATA0/GPIO7
SD_DATA1/GPIO8
SD_DATA2/GPIO9
SD_DATA3/GPIO10
CMD
GPIO16
GPIO17
BTN_ENTER_NET
BTN_UP_NET
BTN_DOWN_NET
DOWN BUTTON
R1
2k
SW1
BTN_DOWN
UP BUTTON
R2
2k
SW2
BTN_UP
ENTER BUTTON
R3
2k
SW3
BTN_ENTER
Onboard power supply
+3.3V
PWR_FLAG
Socket
J1
Conn_01x19_Socket
J2
Conn_01x19_Socket
WiFi_Frauder_DEV
By Anuwat Khongchuai (un4ckn0wl3z)
Sheet: /
File: WiFi_Frauder_DEV.kicad_sch
Title: WiFi Frauder DEV
Size: A4
Date: 2025-06-18
Rev: 3
KiCad E.D.A. 9.0.2
Id: 1/1