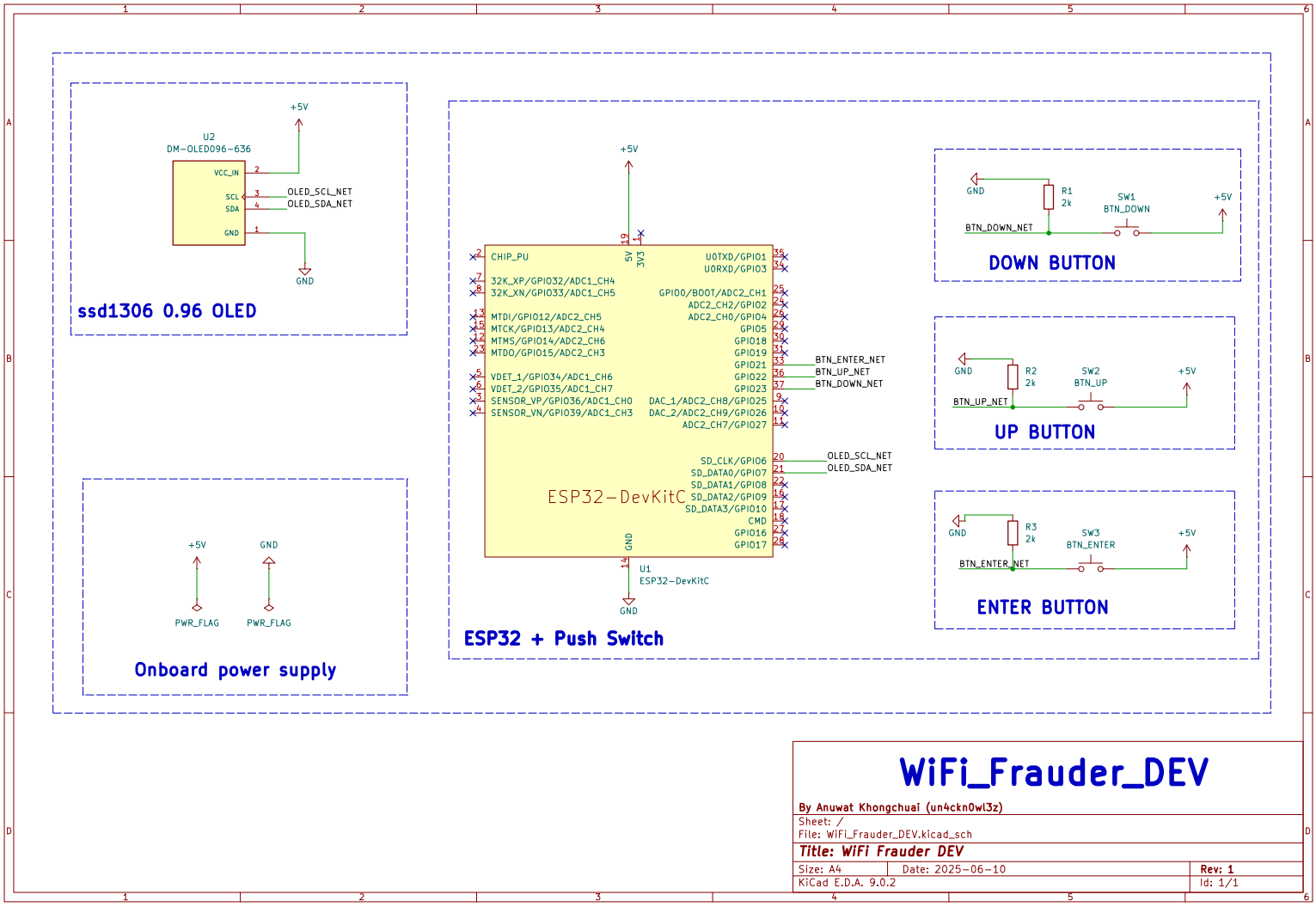

WiFi_Frauder_DEV

By Anuwat Khongchuai (un4ckn0wl3z)

Sheet: /
File: WiFi_Frauder_DEV.kicad_sch

Title: WiFi Frauder DEV

Size: A4	Date: 2025-06-10	Rev: 1
KiCad E.D.A. 9.0.2		Id: 1/1