7643
BUTLER
PLANS & DETAILS

BASIX COMMITMENTS

CERTIFICATE NO. A216915

FIXTURES AND SYSTEMS	
LIGHTING	MIN 40% OF NEW OR ALTERED LIGHT FIXTURES TO BE FITTED WITH FLUORESCENT, COMPACT FLUORESCENT OR LIGHT-EMITTING-DIODE (LED) LAMPS
WET AREAS: NEW OR ALTERED	SHOWER HEADS 3 STAR RATED TOILETS 3 STAR RATED TAPS 3 STAR RATED

INSULATION REQUIREMENTS	
FLOOR ABOVE EXISTING DWELLING OR BUILDING	NIL
FLAT CEILING, PITCHED ROOF	CEILING: R 2.50 (UP) ROOF: FOIL/ SARKING DARK (SOLAR ABSORPTANCE >0.70)
SUSPENDED FLOOR ABOVE GARAGE: FRAMED (R0.7)	NIL
EXTERNAL WALL: BRICK VENEER	R1.16 (OR R1.70 INCLUDING CONSTRUCTION)
EXTERNAL WALL: FRAMED (WEATHERBOARD, FIBRO, METAL CLAD)	R1.30 (OR R1.70 INCLUDING CONSTRUCTION)
EXTERNAL WALL: EXTERNAL INSULATED FACADE SYSTEM (EIFS)(FACADE PANEL: 50MM)	NIL
RAKED CEILING, PITCHED/SKILLION ROOF: FRAMED	CEILING: R 1.74 (UP) ROOF: FOIL BACKED BLANKET (55MM) DARK (SOLAR ABSORPTANCE >0.70)

GLAZING REQUIREMENTS	
WINDOWS	
W1, W2, W3, W8, W9, W10, W11, W12, W13, W19, W20, W21, W22, W23, W24, W25, W26, W27, W28, W29, W30, W31, W32, & W33	TIMBER or uPVC, SINGLE PYROLYTIC LOW-E, (U-VALUE: 3.99, SHGC: 0.4)
W4, W5, W6, W7, W14, W15, W16, W17, W18, W34 & W36	TIMBER or uPVC, SINGLE CLEAR, (U-VALUE: 5.71, SHGC: 0.66)

SHADING DEVICES	
WINDOWS	
W1, W9, W10, W12, W23, W28, W29, W30, W31, W32, W33 & W36	EAVE / VERANDAH / PERGOLA / BALCONY >= 900MM
W2	PROJECTION /HEIGHT ABOVE SILL RATIO >= 0.36
W3 & W8	PROJECTION /HEIGHT ABOVE SILL RATIO >= 0.43
W4	PROJECTION /HEIGHT ABOVE SILL RATIO >= 0.29
W5, W18, W25 & W26	NONE
W6, W13, W16, W17 & W19	PROJECTION /HEIGHT ABOVE SILL RATIO >= 0.23
W7, W14, W15, W20, W21, W22, W24, W27 & W34	EAVE / VERANDAH / PERGOLA / BALCONY >= 450MM
W11	EAVE / VERANDAH / PERGOLA / BALCONY >= 750MM
SKYLIGHTS	
SL1 (NO SHADING)	TIMBER, LOW E INTERNAL/ ARGON FILL/ CLEAR EXTERNAL, (U-VALUE: 2.5, SHGC: 0.456)

WORKS BY OWNER

- REMOVAL & INSTALLATION OF T.V ANTENNA IF REQUIRED & CONNECTION TO NEW AND EXISTING TV POINTS.
- CONNECTION OF NEW COAXIAL CABLE "T.V.POINT" TO EXISTING AND/OR NEW T.V. AERIAL
- PHONE AND/OR DATA CABLING.
- ARRANGING FOR THE GAS SERVICE LINE & GAS METER INSTALLATION FROM THE GAS MAIN.
- INTERNAL PAINTING OF THE EXISTING GARAGE & LOWER GROUND FLOOR SHOWER ROOM 2.
- ALL WORK ASSOCIATED WITH THE SUPPLY AND INSTALLATION OF THE NEW KITCHEN CUPBOARDS AND APPLIANCES INCLUDING CONNECTION TO THE PLUMBING AND DRAINAGE AND SUPPLY/INSTALLATION OF ANY SPLASHBACKS.
- FITOUT OF WALK IN ROBE & BUILT IN ROBES.
- SUPPLY OF DOOR FURNITURE.
- SUPPLY THREE (3) DRAINAGE GRATES TO FIRST FLOOR SHOWER RECESS.
- SUPPLY & INSTALL SHOWER SCREENS & MIRRORS.
- SUPPLY OF FORTY THREE (43) DOWNLIGHT FITTINGS, THREE (3) 3 IN 1 FAN/LIGHT/HEATER UNITS & THREE (3) HARDWIRED HEATED TOWEL RAILS FOR FIRST FLOOR ADDITION.
- SUPPLY OF SIXTY FIVE (65) EXTERNAL & INTERNAL LIGHT FITTINGS, ONE (1) HARDWIRED HEATED TOWEL RAIL TO GROUND FLOOR.
- ALL WORK ASSOCIATED WITH PERGOLA TO PORCH & TERRACE.
- SUPPLY OF TWENTY FIVE (25) EXTERNAL & INTERNAL LIGHT POINTS & ONE (1) HARDWIRED HEATED TOWEL RAIL & FITTNGS TO LOWER GROUND FLOOR.
- SUPPLY OF WET AREA CERAMIC WALL TILES, WET AREA FIXTURES, FITTINGS, EXTERNAL SINK, TAPS & OUTLETS.
- SUPPLY OF "STONE" FLOOR TILES TO FIRST FLOOR ENSUITES & BALCONY, GROUND FLOOR PORCH, TERRACE, POWDER ROOM & LAUNDRY & LOWER GROUND FLOOR SHOWER ROOM, HALLS 1 & 2, RUMPUS/BILLIARDS ROOM & EXTERNAL STEPS.
- ALL ADDITIONAL WORKS ASSOCIATED WITH PROPOSED RENOVATIONS TO LOWER GROUND FLOOR PATIO.
- NEW POOL FENCE AS REQUIRED.
- PROVIDE WATERPROOF FILM TO EXISTING INTERNAL WALLS & FLOOR OF LOWER GROUND FLOOR PRIOR TO PAINTING & FLOOR TILING, IF REQUIRED.
- ALL WORK ASSOCIATED WITH THE REMOVAL & RELOCATION OF THE EXISTING WATER STORAGE TANK TO SOUTH-EAST ELEVATION.
- ALL WORK ASSOCIATED WITH FRONT BOUNDARY FENCE & GATE.
- ALL WORK ASSOCIATED WITH LOWER GROUND FLOOR PATIO CUPBOARDS IF REQUIRED.
- ALL WORK ASSOCIATED WITH EXTENDING PATIO FLOOR IF REQUIRED.
- ALL WORK ASSOCIATED WITH MAKING GOOD LOWER GROUND FLOOR SANDSTONE WALLS AND FLOOR DUE TO ALTERATIONS.
- ALL WORK ASSOCIATED WITH THE RELOCATION AND ADJUSTMENT OF AIR CONDITIONER UNITS.

EXTERNAL PAINT SCHEDULE

ITEM	BRAND eg. WATTYL	CODE	COLOUR	ITEM	BRAND eg. WATTYL	CODE	COLOUR
Window Hardware				Barge Board	Dulux		Antique White USA
Window Frame	Dulux		Antique White USA	Soffit Lining	Dulux		Antique White USA
Window Architrave	Dulux		Antique White USA	Balcony Beam	Dulux		Antique White USA
Cover Battens	Dulux		Antique White USA	Balcony Post	Dulux		Antique White USA
Gable Cladding	Dulux		Buff IT Half	Balusters	Dulux		Antique White USA
Rendered brick	Dulux		Buff IT				
Wall Cladding (Poly)	Dulux		Buff IT Half				
Wall Cladding (Boards)	Dulux		Buff IT Half				
Rafter Tails	Dulux		Antique White USA				

SPECIFICATION SUMMARY

STRUCTURAL TIMBER - All to ASA 1684.2

WALLS: F5 SOFTWOOD
90 X 35 EXT. STUDS @ .600 CTS
70 X 35 INT. STUDS @ .600 CTS

ROOF: ROOF TRUSSES TO MANUFACTURERS DETAILS @ .600 CTS

FLOOR: 140x45mm MIN. FLOOR JOISTS

WIND LOAD W 33 N

FINISHES

BRICKWORK	COMMON BRICKWORK FOR RENDER AND PAINT FINISH
FLOORING	19MM YELLOW TONGUE STRUCTURAL PARTICLEBOARD EX.150x25mm "AUSTRALIANA" GRADE BLACKBUTT STRIP FLOORING TO GROUND FLOOR WHERE SHOWN
CLADDING	FIBRE CEMENT SHEET CLADDING TO GABLE 180mm "LINEA" EXTERNAL CLADDING TO BEDROOM 3, STAIR LOBBY, BEDROOM 2 & ENSUITE 3 BUMP-OUT AREAS & BALCONY BALUSTRADE. 50MM INSULCLAD OVER POLASTIC INSULATION SYSTEM WITH TEXTURE COAT FINISH TO EXTERNAL WALLS
WINDOWS - STEGBAR KEYED LOCKS (TERRAIN: 3)	FRAME: WESTERN RED CEDAR
INSECT SCREENS: TO ALL NEW OPERABLE WINDOW SASHES	BY OWNER
ROOF COVERING	PRE-FINISHED ZINCALUME ROOF SHEETING TO BALCONY & BEDROOM 3 BUMP-OUT PROFILE: CORRUGATED COLOUR: WINDSPRAY WULDERLICH "NULLABOR" TERRACOTTA SHINGLE TILES
ROOF SARKING	FLAME RETARDANT DOUBLE SIDED ALUMINIUM FOIL TO TILED ROOF AREA R 1.3 ALUMINIUM FOIL BACKED "ANTICON" INSULATION BLANKET TO METAL ROOF AREA
INSULATION (FIBREGLASS)	R3.0 BATTS TO FIRST FLOOR ADDITION CEILING AREA (EXCLUDING BALCONY) GROUND FLOOR CEILING AREA OUTSIDE THE FIRST FLOOR FOOTPRINT (EXCLUDING PORCH & GARAGE). R2.0 BATTS TO FIRST FLOOR EXTERNAL WALL FRAMES R2.4 12mm POLASTIC INSULATION BLANKET TO FIRST FLOOR & GROUND FLOOR CLADDED WALLS. R2.0 ROCKWOOL BATTS TO FLOOR AREA OF THE BED 2, BED 3, BED 4, ENSUITE 3 & STAIR LOBBY. R2.0 ROCKWOOL BATTS TO INTERNAL DIVIDING WALL BETWEEN BED 2-STAIR LOBBY, BED 3-STAIR LOBBY, ENSUITE 3-STAIR LOBBY, ENSUITE 3-BED 4 & ENSUITE 3-BED 3.
INTERNAL FIXINGS	DAR: FINGER JOINTED PINE SKIRTING: Ex.150x25 "THREE QUARTER SPLAYED ARCHITRAVE: Ex.100x25 "SQUARE DRESSED"
INTERNAL DOORS	CORINTHIAN 2340mm HIGH "BALMORAL-P.B.A.L.2" & 2040mm HIGH "BALMORAL P.B.A.L.2 TO LOWER GROUND FLOOR & GARAGE AREAS.
STAIRCASE MAPLE TREADS & PINE RISERS. CUPBOARDS UNDER TREADS 1-14	TYPE: CLOSED RISER-CUT STRINGER WIDTH: 1100mm RISE 19 @ 182mm GOING: 240mm (260mm TREAD)
BARGE BOARDS	MATERIAL: DAR TIMBER
GUTTERS & DOWNPIPES	TYPE: QUAD MATERIAL: PREFINISHED ZINCALUME GUTTER COLOUR: WINDSPRAY DOWNPIPE COLOUR: WINDSPRAY
HOT WATER UNIT	NEW RINNAI INFINITY 32 EXTERNAL GAS
PAINTING - REFER TO SPECIFICATION FOR THE EXTENT OF WORK	FIRST FLOOR EXTERNAL: BY CAPE COD FIRST FLOOR INTERNAL: BY CAPE COD GROUND FLOOR INTERNAL EXCL GARAGE: BY CAPE COD GROUND FLOOR EXTERNAL: BY CAPE COD LOWER G/FLOOR INT EXCL SHOWER 2: BY CAPE COD LOWER G/FLOOR EXTERNAL: BY CAPE COD PAINTING TO ALTERATION AND RENOVATION WORK TO BE BY THE OWNER UNLESS NOTED OTHERWISE

FINISHED GROUND LEVELS SHOWN ON PLAN ARE SUBJECT TO SITE CONDITIONS.
DO NOT SCALE OFF DRAWINGS.
ALL DIMENSIONS SHOWN ARE THEORETICAL ONLY AND ARE SUBJECT TO SITE MEASURE DURING CONSTRUCTION.
NO ALLOWANCE HAS BEEN MADE FOR SHRINKAGE OR MILLING.

COPYRIGHT THIS DESIGN AND PRINT IS THE PROPERTY OF CAPE COD AND IS ISSUED FOR THE SOLE PURPOSE OF ENTERING INTO A BUILDING CONTRACT WITH THE COMPANY. IT MUST NOT BE USED OR REPRODUCED IN WHOLE OR IN PART WITHOUT WRITTEN PERMISSION FROM THE COMPANY.

SPECIAL NOTES

- PROVIDE ONE (1) SMOKE DETECTOR TO FIRST FLOOR AS SHOWN
- PROVIDE TWO (2) SMOKE DETECTORS TO GROUND FLOOR AS SHOWN
- PROVIDE TWO (2) SMOKE DETECTORS TO L/GROUND FLOOR AS SHOWN
- ELECTRICIAN TO CHECK/ENSURE THE EXISTING SMOKE DETECTORS COMPLY WITH THE BUILDING CODE OF AUSTRALIA (NCC).
- AS PER THE NCC - ALL WET AREA WINDOWS TO HAVE TOUGHENED GLASS.
- PROVIDE MARINE GRADE BRICKS, MORTAR AND TIES IN ACCORDANCE WITH AS3700 AS SITE IS WITHIN 1KM OF OCEAN.
- FINE SANDING & "MODIFIED TUNG OIL" APPLICATION TO NEW GROUND FLOOR T&G FLOORING.
- SEALING OF "STONE" FLOOR TILES.
- INSTALL THREE (3) DRAINAGE GRATES TO EACH OF THE ENSUITE RECESSES.
- PROVIDE FEDERATION EAVES WITH V JOINTED PINE LININGS.
- PROVIDE CONTROL COCK FOR SINGLE ACTION MIXER TAPS.
- PROVIDE METAL FLUE TO FIREPLACE.

No.	ISSUE	DRAWN	DATE
H	FINAL CONSTRUCTION	N.L.	21-09-15
G	CONSTRUCTION CERTIFICATE	S.C.	15-09-15
F	FINAL CONSTRUCTION	S.C.	09-09-15
E	TO CONTRACTS	S.C.	22-07-15
D	SURVEY, BASIX DETAILS ADDED & TO COUNCIL	N.E.	27-04-15
C	POV 16334 & 16335	J.M.	08-04-15
B	TO CLIENT	S.M.	16-03-15
A	TECHNICAL & POV FOR ENSUITE 3 EXTENSION	S.M.	24-02-15

DESIGN CONSULTANT: DAREK SZYMANSKI

PROPOSED ADDITIONS & ALTERATIONS

FOR MR A & MRS P BUTLER

AT 76 HOPETOUN AVENUE
VAUCLUSE NSW 2030

COUNCIL: WOOLLAHRA

Cape Cod AUSTRALIA
A.B.N. 54 000 605 407
SUITE 41, 410 CHURCH STREET,
NORTH PARRAMATTA 2151
PHONE: (02) 9849 4444
BUILDERS LICENCE NO. 5519

SHEET: 1 OF 15 | JOB NO: 7643/15 | H

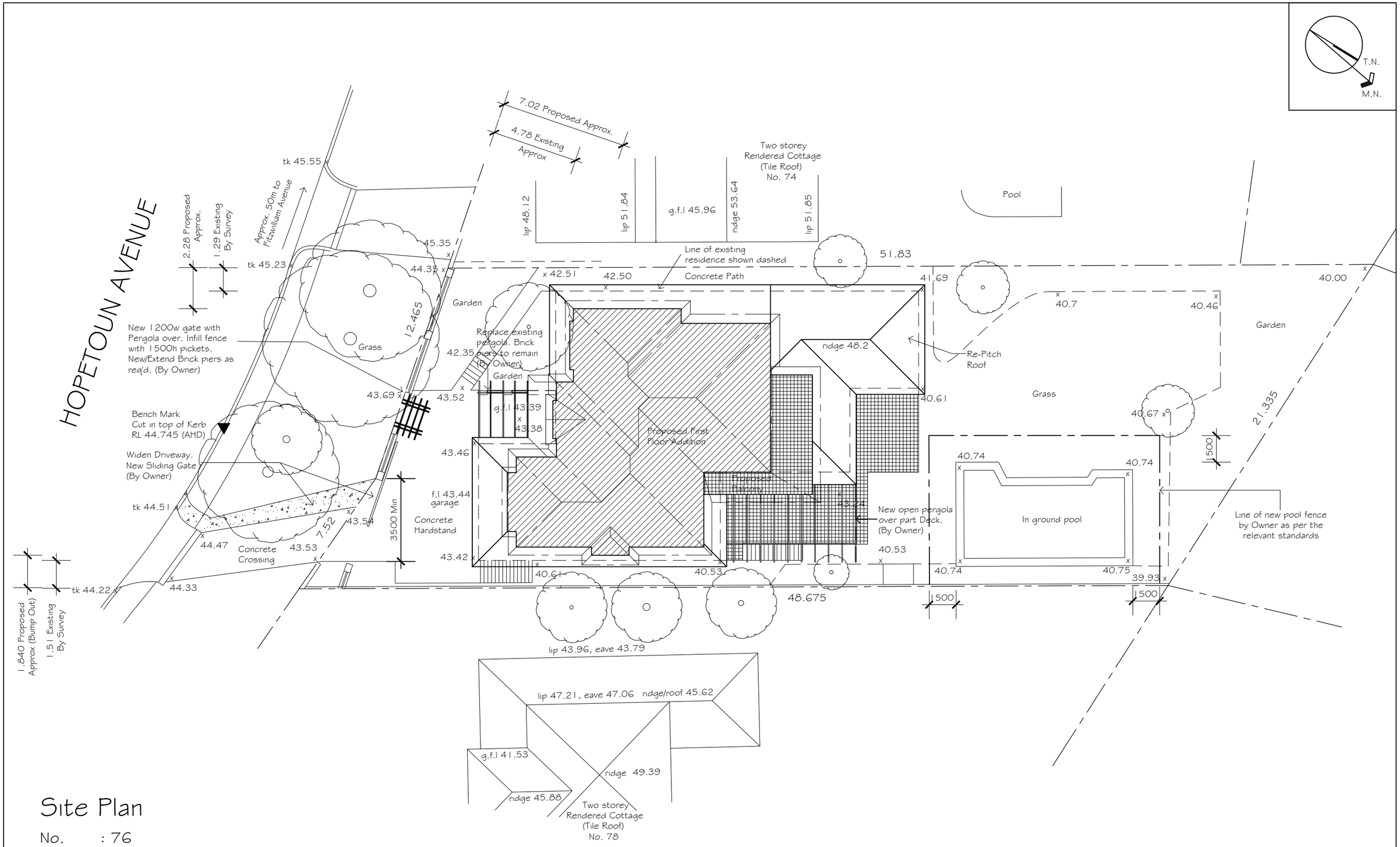

Site Plan

No. : 76
Lot. : 42
Section : 4
DP : 9327
AREA : 887.8m² (By Title)
888.2m² (By Calc.)

FOR: MR A BUTLER & MRS P BUTLER	AT: 76 HOPETOUN AVENUE, VAUCLUSE NSW 2030	SCALE: 1 : 200	SHEET: 2 OF 16	JOB NO: 7643/15	H	Cape Cod AUSTRALIA

Legend

AC	Air Conditioning Unit Wall Mounted
SAC	Air Conditioning Compressor
DP	Downpipe
EL	Eave Light
EF	Exhaust Fan
G	Gully
HWU	Hot Water Unit
T	Tap - Garden
VP	Sewer Vent Pipe
WL	Wall Light
	Smoke Detector - Existing
RWT	Rain water tank
S	S/Water Sump

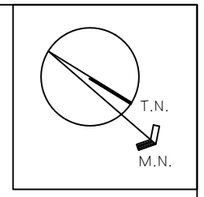

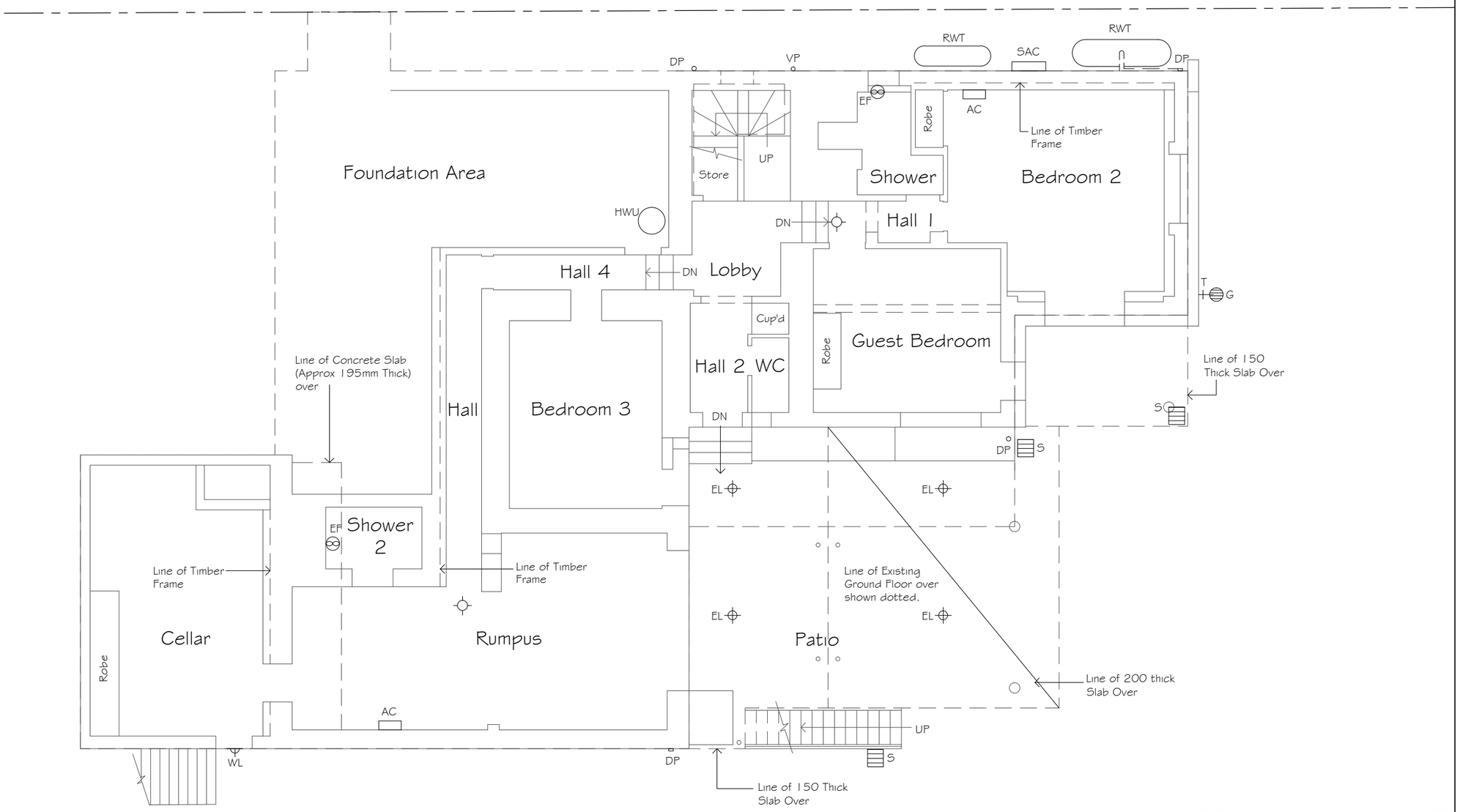

Existing Lower Ground Floor Plan

FOR: MR A BUTLER & MRS P BUTLER	AT: 76 HOPETOUN AVENUE, VAUCLUSE NSW 2030	SCALE: 1:100	SHEET: 3 OF 16	JOB NO: 7643/15	H

Cape Cod AUSTRALIA

Legend

AC	Air Conditioning Unit Wall Mounted
DP	Downpipe
EF	Exhaust Fan
SAC	Air Conditioning Compressor
VP	Sewer Vent Pipe
T	Tap - Garden
T.V.	TV Antenna - Owner to relocate as required
WL	Wall Light
MH	Manhole
MB	Meter Box - Electrical
SD	Satellite Dish
	Smoke Detector - Existing
RWT	Rain water tank

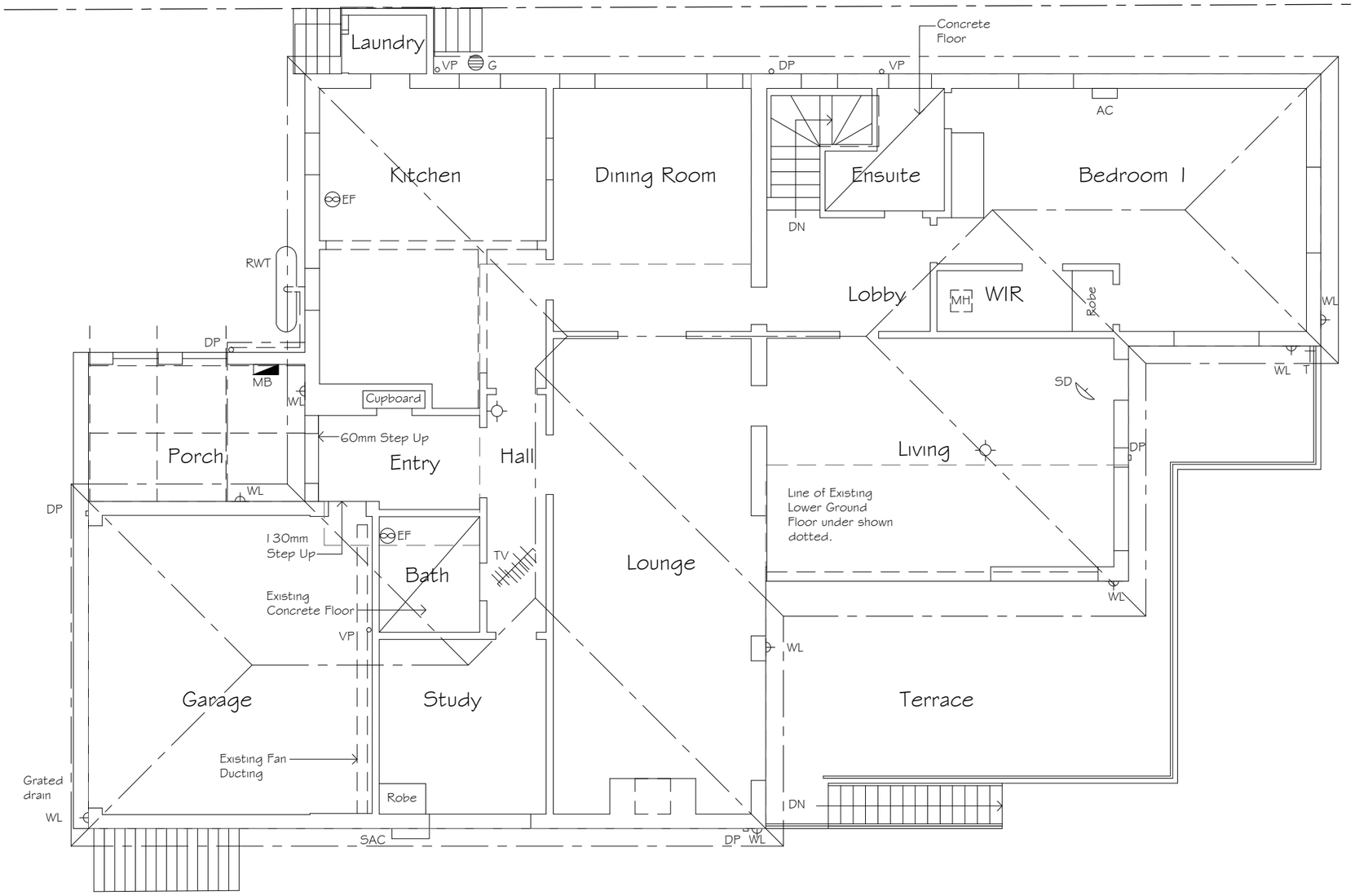

Existing Ground Floor Plan

FOR: MR A BUTLER & MRS P BUTLER	AT: 76 HOPETOUN AVENUE, VAUCLUSE NSW 2030	SCALE: 1:100	SHEET: 4 OF 16	JOB NO: 7643/15	H

Cape Cod AUSTRALIA

Legend

AC	Air Conditioning Unit Wall Mounted
SAC	Air Conditioning Compressor
DP	Downpipe
EL	Eave Light
EF	Exhaust Fan
G	Gully
HWU	Hot Water Unit
T	Tap - Garden
VP	Sewer Vent Pipe
WL	Wall Light
	Smoke Detector - Existing
RWT	Rain water tank
S	S/Water Sump

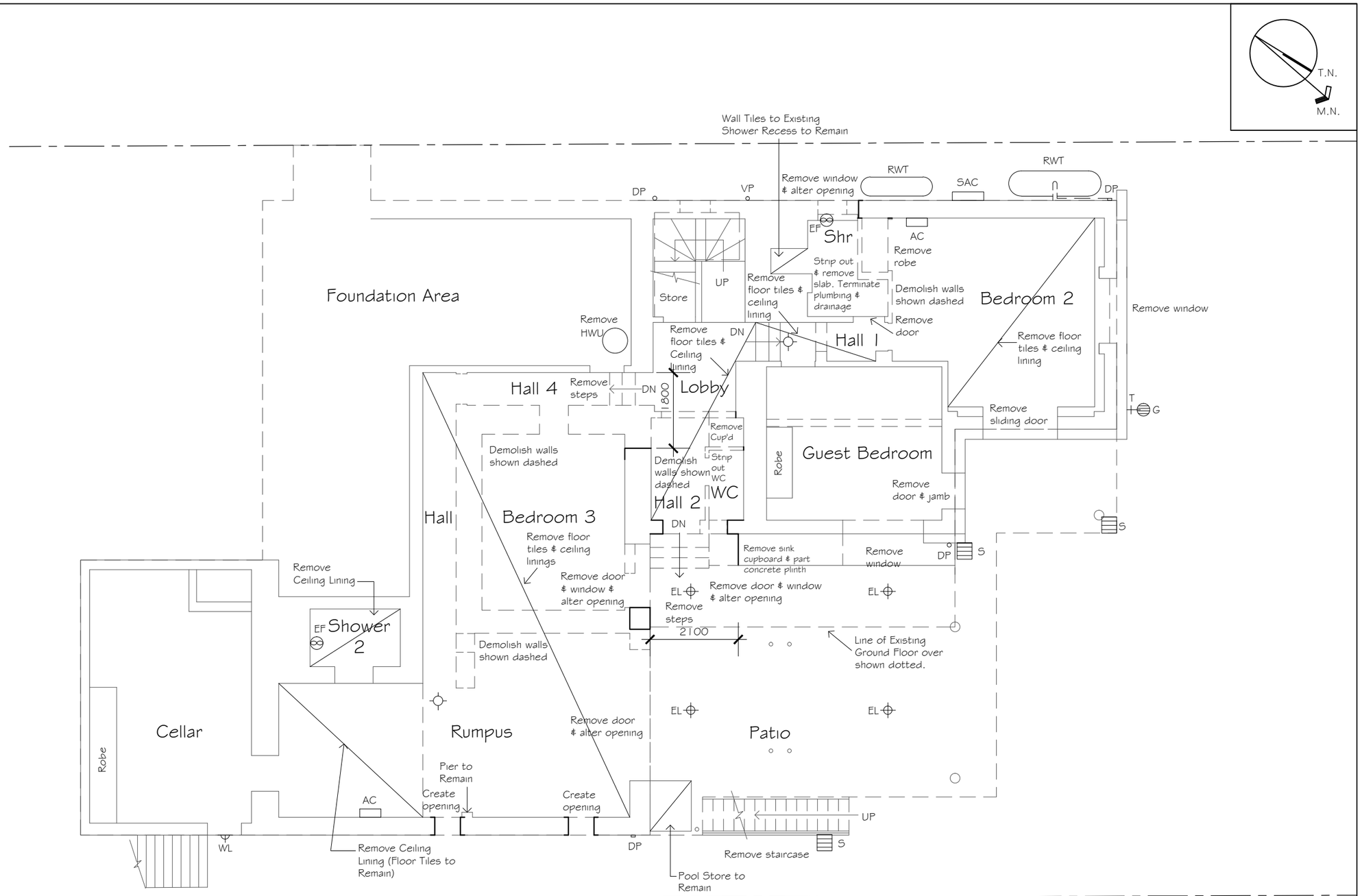

Lower Ground Floor Demolition Plan

FOR: MR A BUTLER & MRS P BUTLER	AT: 76 HOPETOUN AVENUE, VAUCLUSE NSW 2030	SCALE: 1:100	SHEET: 5 OF 16	JOB NO: 7643/15	H

Cape Cod AUSTRALIA

Legend

AC	Air Conditioning Unit Wall Mounted
DP	Downpipe
EF	Exhaust Fan
SAC	Air Conditioning Compressor
VP	Sewer Vent Pipe
T	Tap - Garden
T.V.	TV Antenna - Owner to relocate as required
WL	Wall Light
MH	Manhole
MB	Meter Box - Electrical
SD	Satellite Dish
	Smoke Detector - Existing
RWT	Rain water tank

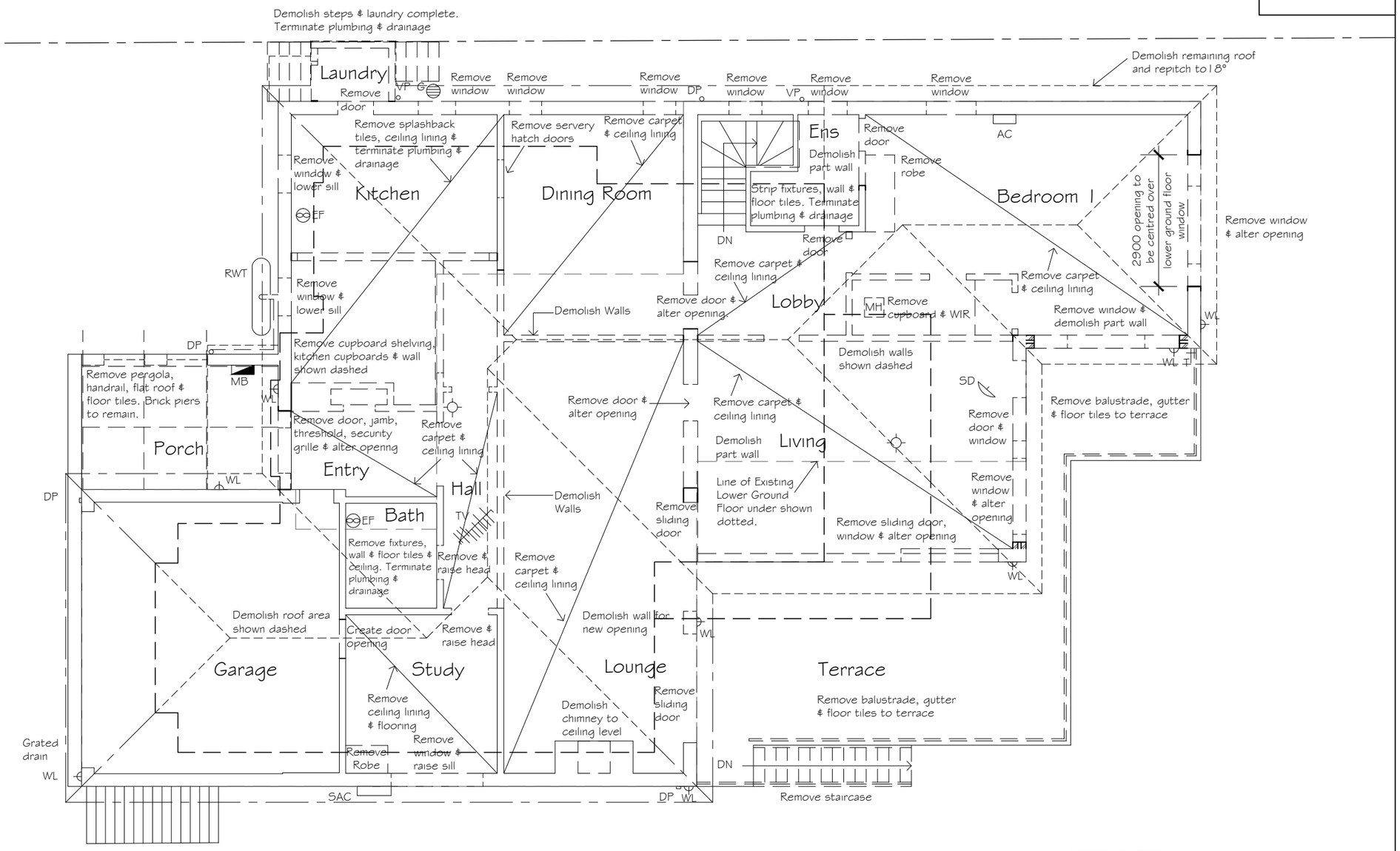

Ground Floor Demolition Plan

FOR: MR A BUTLER & MRS P BUTLER	AT: 76 HOPETOUN AVENUE, VAUCLUSE NSW 2030	SCALE: 1:100	SHEET: 6 OF 16	JOB NO: 7643/15	H

Cape Cod AUSTRALIA

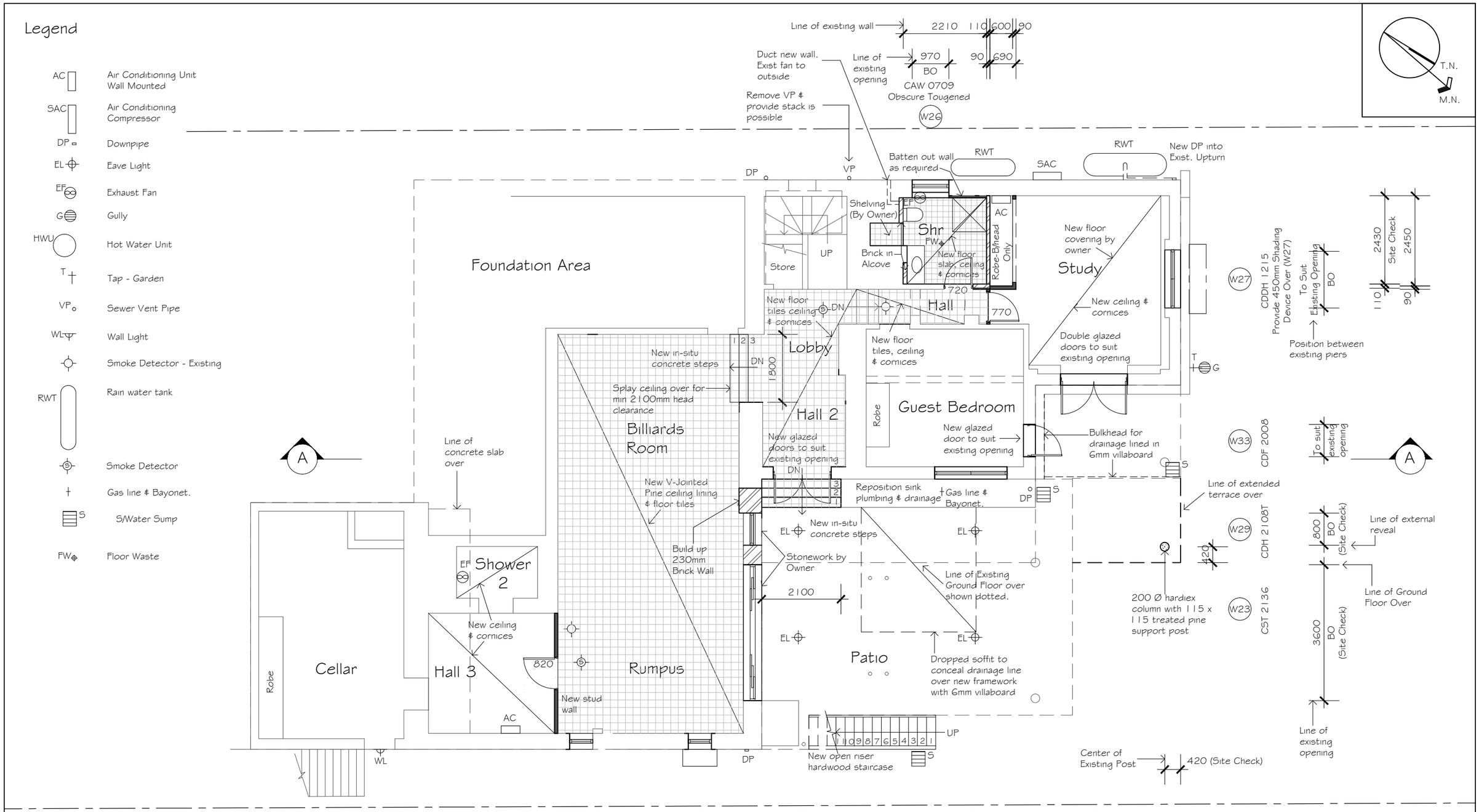

Proposed Lower Ground Floor Plan

FOR: MR A BUTLER & MRS P BUTLER	AT: 76 HOPETOUN AVENUE, VAUCLUSE NSW 2030	SCALE: 1:100	SHEET: 7 OF 16	JOB NO: 7643/15	H	Cape Cod AUSTRALIA

Legend

AC	Air Conditioning Unit Wall Mounted
DP	Downpipe
EF	Wall Mounted Exhaust Fan
SAC	Air Conditioning Compressor
VP	Sewer Vent Pipe
T	Tap - Garden
T.V.	TV Antenna - Owner to relocate as required
WL	Wall Light
MH	Manhole
MB	Meter Box - Electrical
SD	Satellite Dish
	Smoke Detector - Existing
RWT	Rain water tank
FW	Floor Waste
S	Smoke Detector

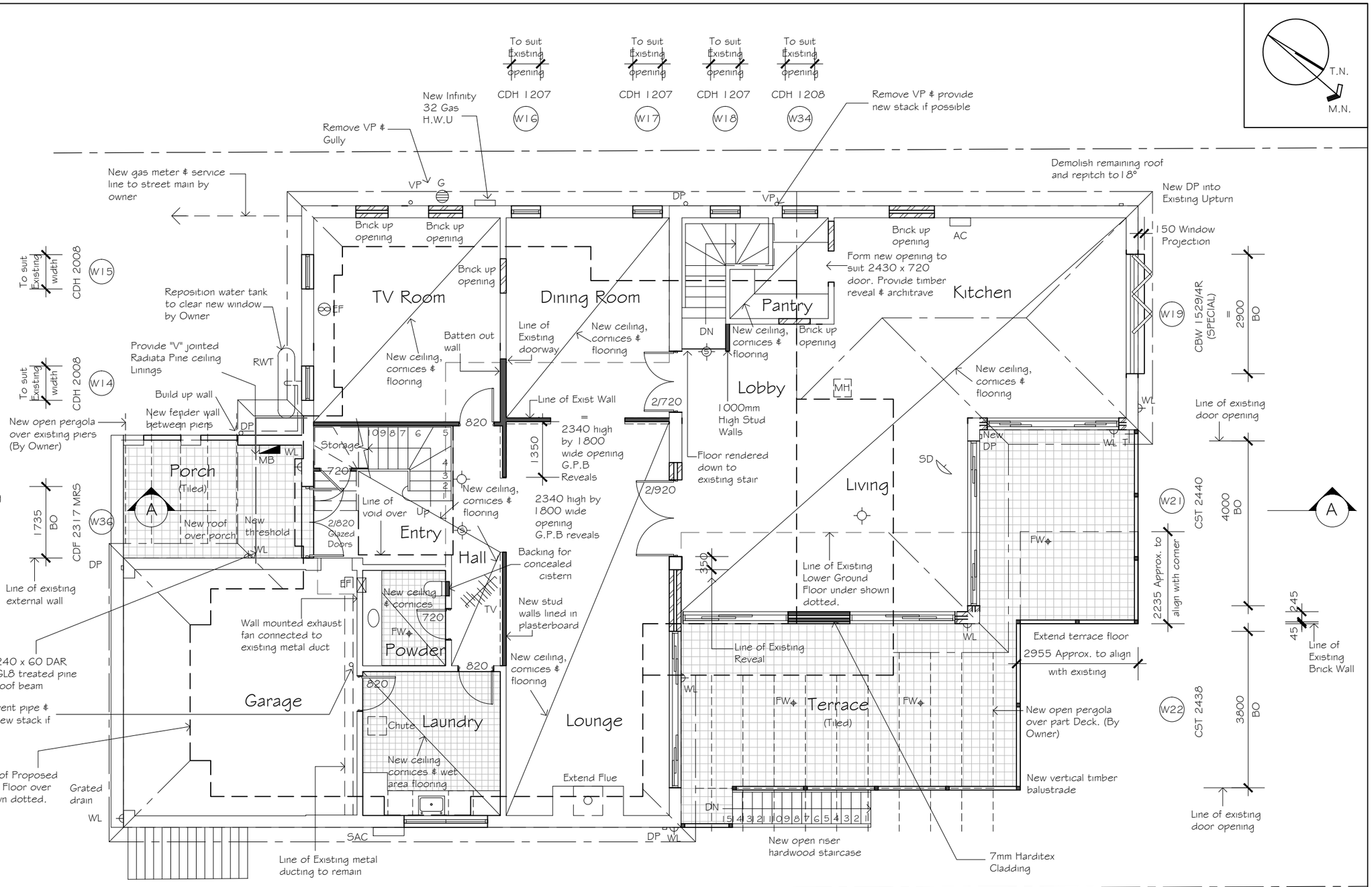

Proposed Ground Floor Plan

FOR: MR A BUTLER & MRS P BUTLER	AT: 76 HOPETOUN AVENUE, VAUCLUSE NSW 2030	SCALE: 1:100	SHEET: 8 OF 16	JOB NO: 7643/15	H	Cape Cod AUSTRALIA

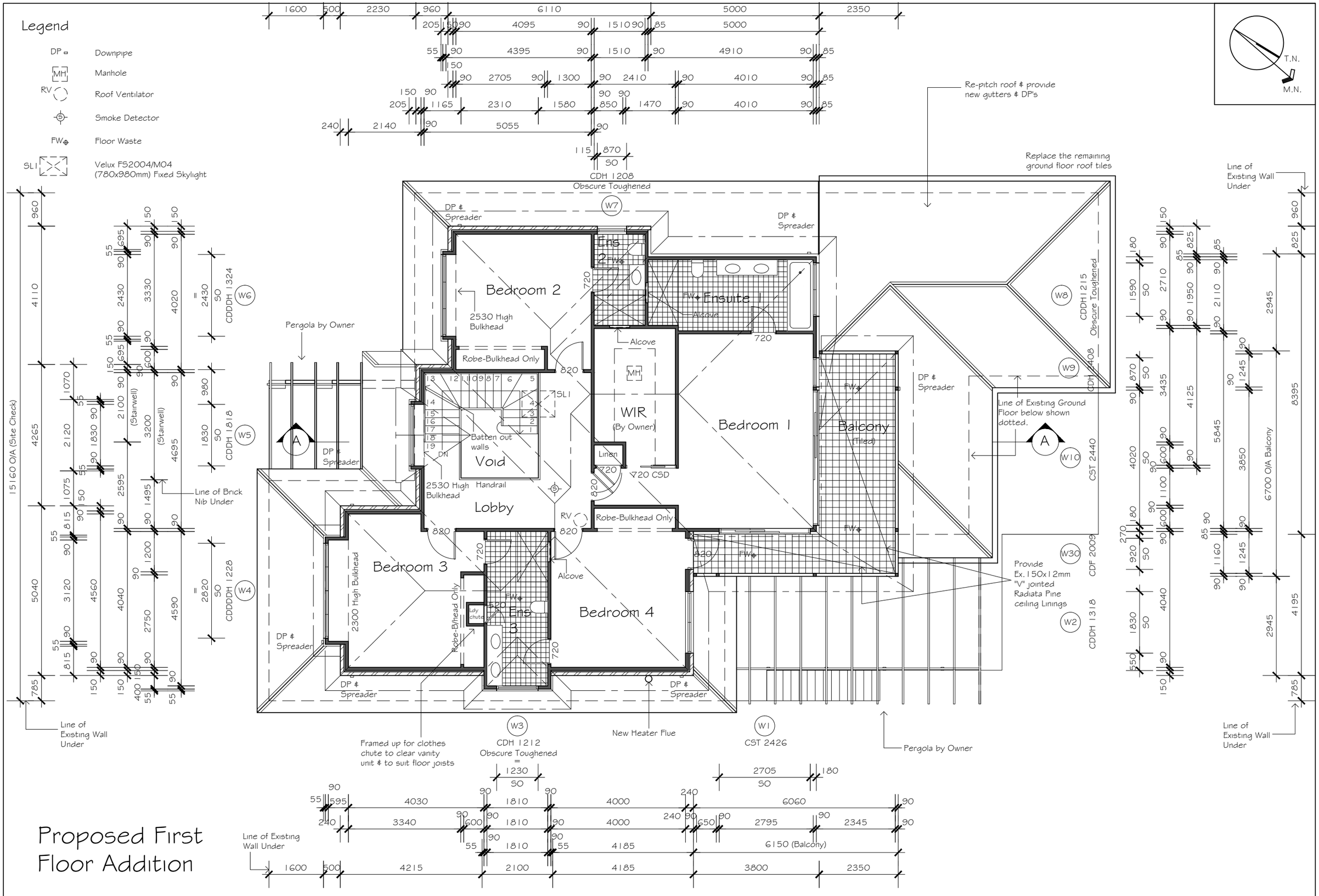

Proposed First Floor Addition

FOR: MR A BUTLER & MRS P BUTLER	AT: 76 HOPETOUN AVENUE, VAUCLUSE NSW 2030	SCALE: 1:100	SHEET: 9 OF 16	JOB NO: 7643/15	H	Cape Cod AUSTRALIA

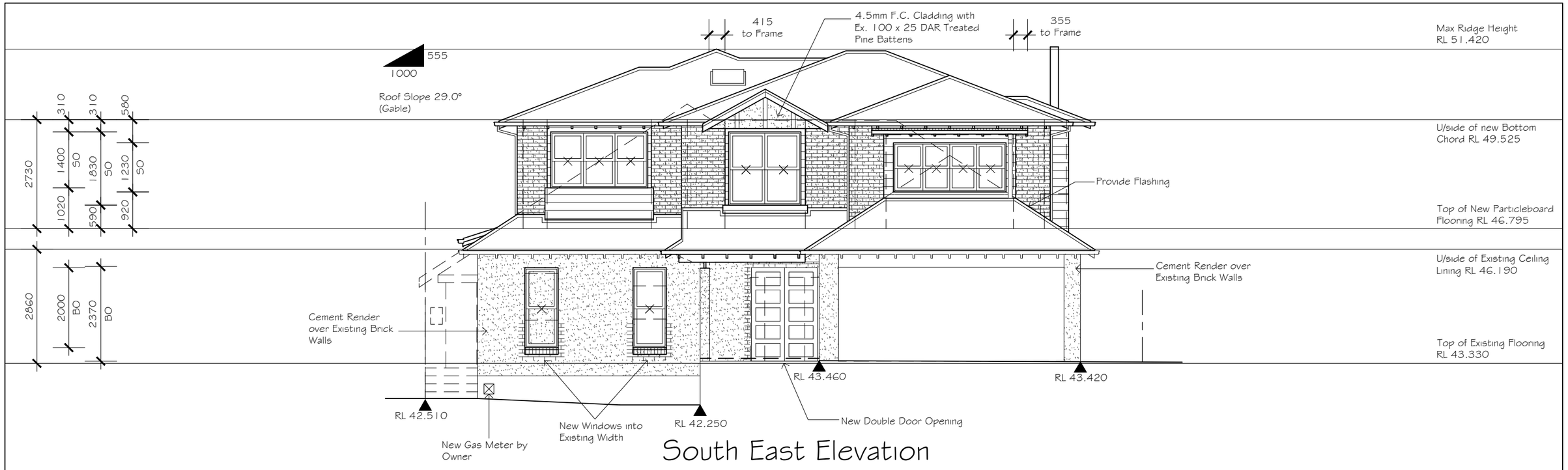

South East Elevation

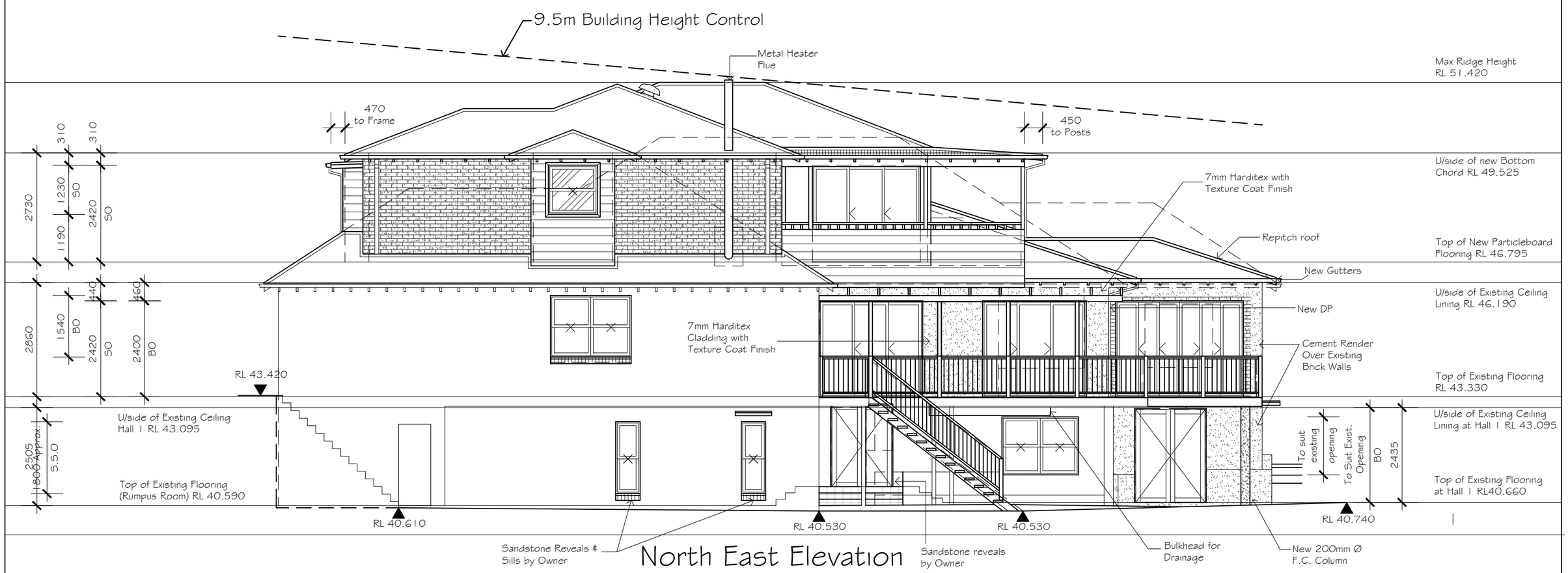

North East Elevation

FOR: MR A BUTLER & MRS P BUTLER	AT: 76 HOPETOUN AVENUE, VAUCLUSE NSW 2030	SCALE: 1:100	SHEET: 10 OF 16	JOB NO: 7643/15	H	Cape Cod AUSTRALIA

North West Elevation

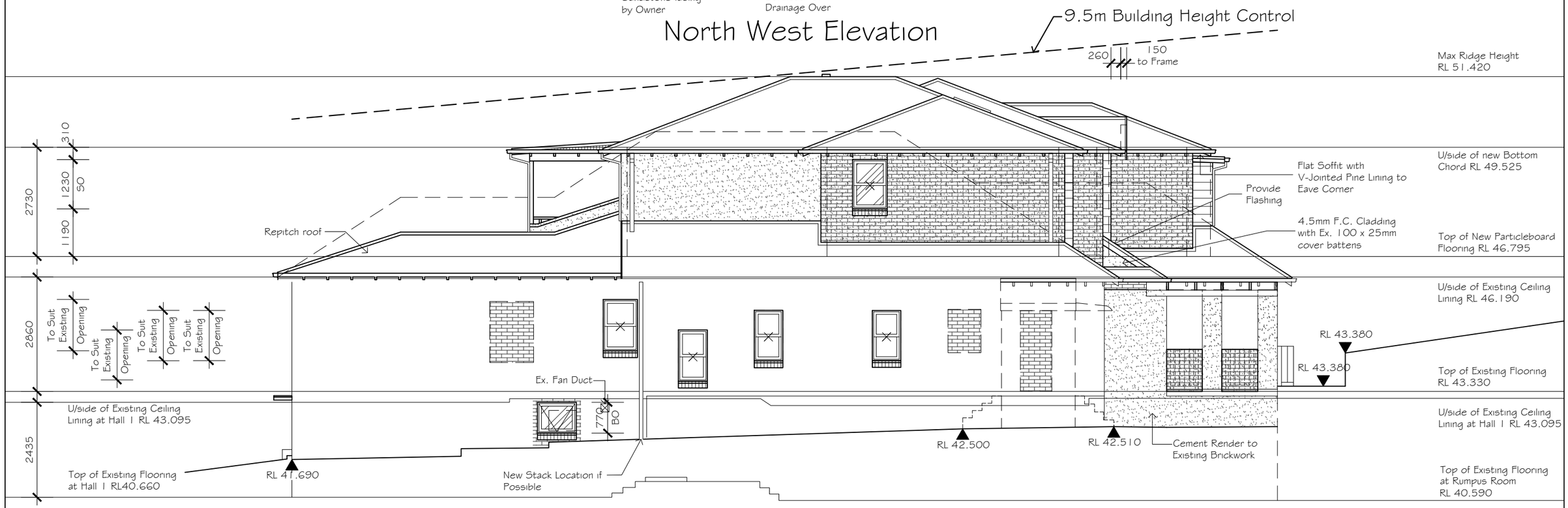

South West Elevation

FOR: MR A BUTLER & MRS P BUTLER	AT: 76 HOPETOUN AVENUE, VAUCLUSE NSW 2030	SCALE: 1:100	SHEET: 11 OF 16	JOB NO: 7643/15	H	Cape Cod AUSTRALIA

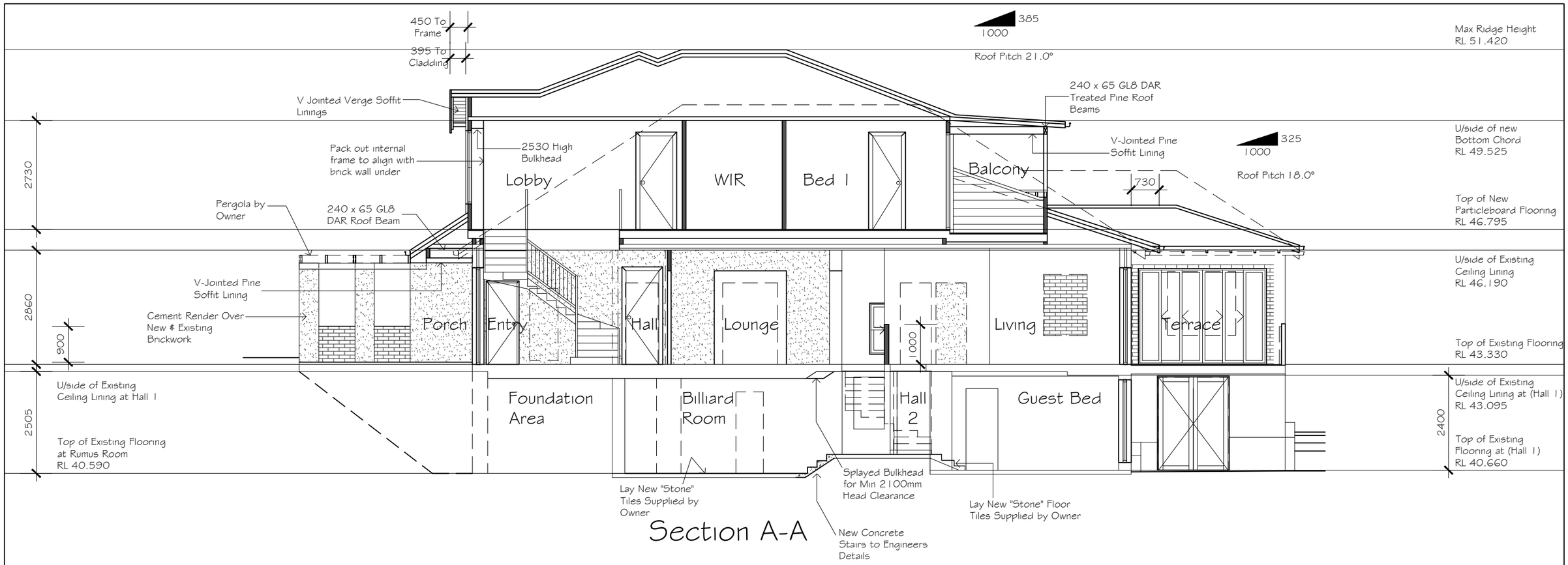

Section A-A

FOR: MR A BUTLER & MRS P BUTLER	AT: 76 HOPETOUN AVENUE, VAUCLUSE NSW 2030	SCALE: 1:100	SHEET: 12 OF 16	JOB NO: 7643/15	H	Cape Cod AUSTRALIA

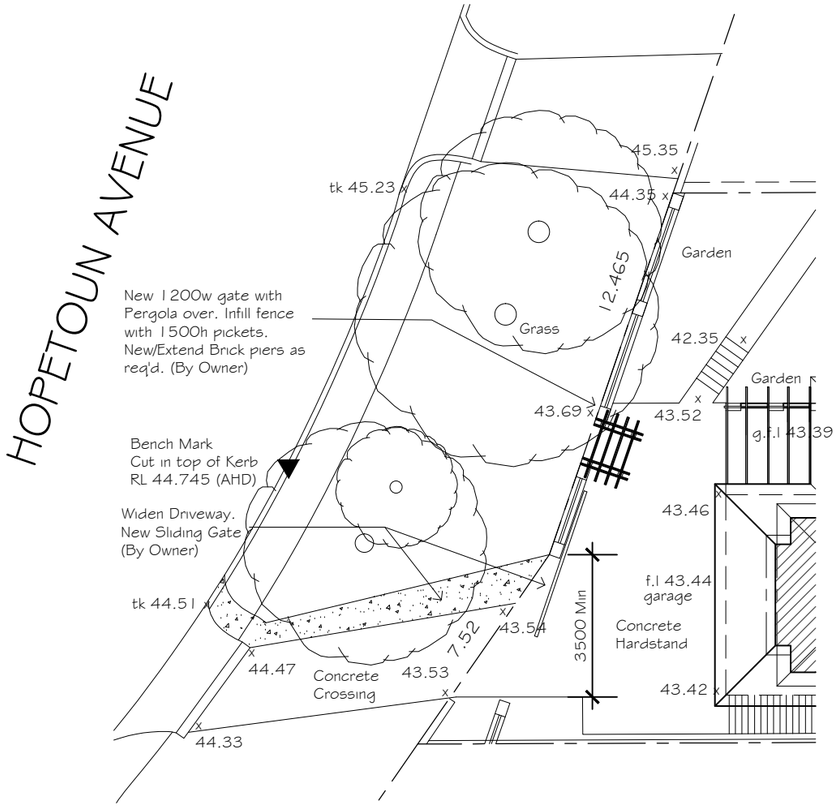

Front Fence Plan

1:200

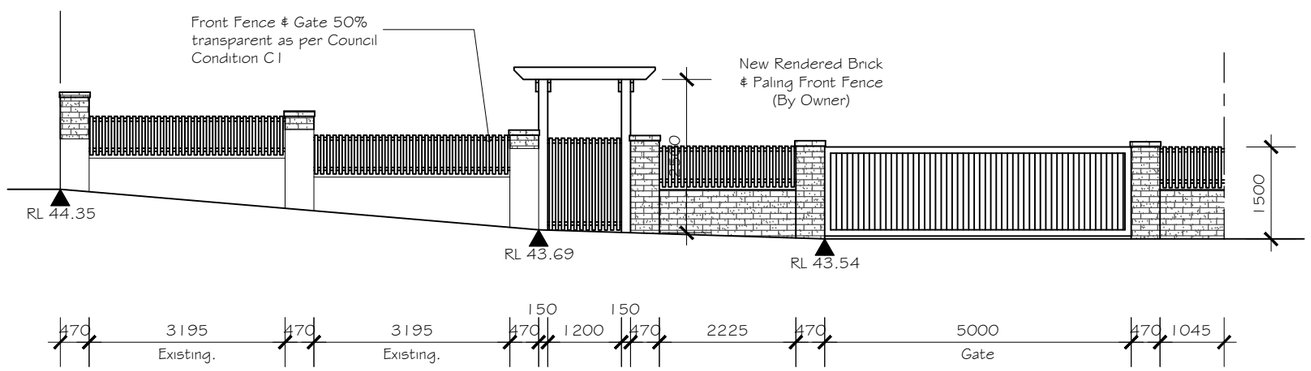

Front Fence South East Elevation - By Owner

FOR: MR A BUTLER & MRS P BUTLER	AT: 76 HOPETOUN AVENUE, VAUCLUSE NSW 2030	SCALE: 1:100	SHEET: 13 OF 16	JOB NO: 7643/15	H	Cape Cod AUSTRALIA

FIRST FLOOR WINDOWS (BASIX A216915)

STANDARD NOTES:

- WINDOWS AND DOORS ARE DRAWN AS VIEWED FROM OUTSIDE
- ALL WINDOWS COME WITH "KEYED ALIKE" LOCKS
- WINDOW OPENINGS NOTED "R" HAVE RESTRICTED OPENINGS TO COMPLY WITH THE NCC 3.9.2.5

CLIENT: .....

CLIENT: .....

BUILDER: .....DATE: .....

TIMBER WINDOWS:

TIMBER WINDOWS, DOOR FRAMES AND DOORS ARE TO BE SUPPLIED CLEAR PRIMED INSIDE AND OUT FOR A PAINT/STAINED FINISH.

STANDARD HARDWARE COLOURS: SATIN CHROME, GOLD, MAHOGANY BRONZE & WHITE.

TERRAIN: 3 WIND LOAD: W 33 N

		HARDWARE COLOUR	GLAZING	SPECIAL NOTES
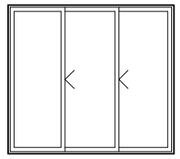	W1 CST 2426 NE ELEVATION / BEDROOM 1 WESTERN RED CEDAR STACKER FIXED / OPEN / OPEN	INSECT SCREEN BY OWNER	SINGLE PYROLYTIC LOW-E, (OR U-VALUE: 3.99, SHGC: 0.4) REVEAL	HINGES TO BE SATIN CHROME
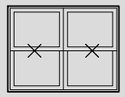	W2 CDDH 1318 NW ELEVATION / BEDROOM 4 WESTERN RED CEDAR DOUBLE HUNG OPEN / OPEN	INSECT SCREEN BY OWNER	SINGLE PYROLYTIC LOW-E, (OR U-VALUE: 3.99, SHGC: 0.4)	RESTRICT BOTTOM SASH OPENING TO 125mm TO COMPLY WITH NCC.
	W3 CDH 1212 NE ELEVATION / ENSUITE 3 WESTERN RED CEDAR DOUBLE HUNG OPEN / OPEN	INSECT SCREEN BY OWNER	SINGLE PYROLYTIC LOW-E, (OR U-VALUE: 3.99, SHGC: 0.4)	TRANSLUCENT FILM BY BUILDER.
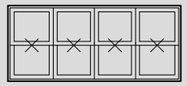	W4 CDDDDH 1228 SE ELEVATION / BEDROOM 3 WESTERN RED CEDAR DOUBLE HUNG OPEN / OPEN / OPEN / OPEN	INSECT SCREEN BY OWNER	SINGLE CLEAR, (OR U-VALUE: 5.71, SHGC: 0.66)	RESTRICT BOTTOM SASH OPENING TO 125mm TO COMPLY WITH NCC.
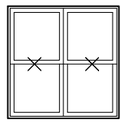	W5 CDDH 1818 SE ELEVATION / LOBBY WESTERN RED CEDAR DOUBLE HUNG OPEN / OPEN	INSECT SCREEN BY OWNER	SINGLE CLEAR, (OR U-VALUE: 5.71, SHGC: 0.66)	
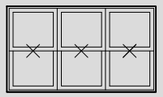	W6 CDDDH 1324 SE ELEVATION / BEDROOM 2 WESTERN RED CEDAR DOUBLE HUNG OPEN / OPEN / OPEN	INSECT SCREEN BY OWNER	SINGLE CLEAR, (OR U-VALUE: 5.71, SHGC: 0.66)	RESTRICT BOTTOM SASH OPENING TO 125mm TO COMPLY WITH NCC.
	W7 CDH 1208 SW ELEVATION / ENSUITE 2 WESTERN RED CEDAR DOUBLE HUNG OPEN / OPEN	INSECT SCREEN BY OWNER	OBSCURED, TOUGHENED, (OR U-VALUE: 5.71, SHGC: 0.66)	TRANSLUCENT FILM BY BUILDER.
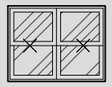	W8 CDDH 1215 NW ELEVATION / ENSUITE 1 WESTERN RED CEDAR FIXED FIXED	INSECT SCREEN BY OWNER	SINGLE PYROLYTIC LOW-E, (OR U-VALUE: 3.99, SHGC: 0.4)	TRANSLUCENT FILM BY BUILDER.
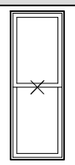	W9 CDH 2408 NW ELEVATION / BEDROOM 1 WESTERN RED CEDAR DOUBLE HUNG OPEN / OPEN	INSECT SCREEN BY OWNER	SINGLE PYROLYTIC LOW-E, (OR U-VALUE: 3.99, SHGC: 0.4)	
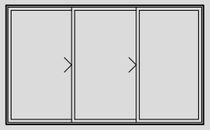	W10 CST 2440 NW ELEVATION / BEDROOM 1 WESTERN RED CEDAR STACKER OPEN / OPEN / FIXED	INSECT SCREEN BY OWNER	SINGLE PYROLYTIC LOW-E, (OR U-VALUE: 3.99, SHGC: 0.4)	HINGES TO BE SATIN CHROME
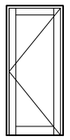	W30 CDF 2009 NW ELEVATION / BEDROOM 4 WESTERN RED CEDAR HINGED OPEN	INSECT SCREEN BY OWNER	SINGLE PYROLYTIC LOW-E, (OR U-VALUE: 3.99, SHGC: 0.4)	HINGES TO BE SATIN CHROME
	W35 DELETED			

FOR:	AT:	SCALE:	SHEET:	JOB NO:	
MR A BUTLER & MRS P BUTLER	76 HOPETOUN AVENUE, VAUCLUSE NSW 2030	1 : NTS	14 OF 16	7643/15	H

Cape Cod AUSTRALIA

FIRST FLOOR WINDOWS (BASIX A216915)

STANDARD NOTES:

- WINDOWS AND DOORS ARE DRAWN AS VIEWED FROM OUTSIDE
- ALL WINDOWS COME WITH "KEYED ALIKE" LOCKS
- WINDOW OPENINGS NOTED "R" HAVE RESTRICTED OPENINGS TO COMPLY WITH THE NCC 3.9.2.5

CLIENT: .....

CLIENT: .....

BUILDER: .....DATE: .....

TIMBER WINDOWS:

TIMBER WINDOWS, DOOR FRAMES AND DOORS ARE TO BE SUPPLIED CLEAR PRIMED INSIDE AND OUT FOR A PAINT/STAINED FINISH.

STANDARD HARDWARE COLOURS: SATIN CHROME, GOLD, MAHOGANY BRONZE & WHITE.

TERRAIN: 3 WIND LOAD: W 33 N

		HARDWARE COLOUR	GLAZING	SPECIAL NOTES
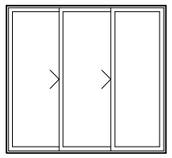	W11 CST 2426 NE ELEVATION / LIVING WESTERN RED CEDAR STACKER OPEN / OPEN / FIXED	INSECT SCREEN BY OWNER	SINGLE PYROLYTIC LOW-E, (OR U-VALUE: 3.99, SHGC: 0.4) REVEAL	HINGES TO BE SATIN CHROME
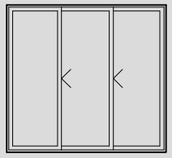	W12 CST 2426 NE ELEVATION / LIVING WESTERN RED CEDAR STACKER FIXED / OPEN / OPEN	INSECT SCREEN BY OWNER	SINGLE PYROLYTIC LOW-E, (OR U-VALUE: 3.99, SHGC: 0.4)	HINGES TO BE SATIN CHROME
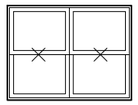	W13 CDDH 1520 NE ELEVATION / LAUNDRY WESTERN RED CEDAR DOUBLE HUNG OPEN / OPEN	INSECT SCREEN BY OWNER	SINGLE PYROLYTIC LOW-E, (OR U-VALUE: 3.99, SHGC: 0.4)	TO SUIT EXISTING WIDTH.
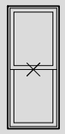	W14 CDH 2008 SE ELEVATION / TV ROOM WESTERN RED CEDAR DOUBLE HUNG OPEN / OPEN	INSECT SCREEN BY OWNER	SINGLE CLEAR, (OR U-VALUE: 5.71, SHGC: 0.66)	TO SUIT EXISTING WIDTH.
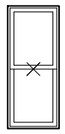	W15 CDH 2008 SE ELEVATION / TV ROOM WESTERN RED CEDAR DOUBLE HUNG OPEN / OPEN	INSECT SCREEN BY OWNER	SINGLE CLEAR, (OR U-VALUE: 5.71, SHGC: 0.66)	TO SUIT EXISTING WIDTH.
	W16 CDH 1207 SW ELEVATION / DINING RM WESTERN RED CEDAR DOUBLE HUNG OPEN / OPEN	INSECT SCREEN BY OWNER	SINGLE CLEAR, (OR U-VALUE: 5.71, SHGC: 0.66)	TO SUIT EXISTING OPENING.
	W17 CDH 1207 SW ELEVATION / DINING RM WESTERN RED CEDAR DOUBLE HUNG OPEN / OPEN	INSECT SCREEN BY OWNER	SINGLE CLEAR, (OR U-VALUE: 5.71, SHGC: 0.66)	TO SUIT EXISTING OPENING.
	W18 CDH 1207 SW ELEVATION / PANTRY WESTERN RED CEDAR DOUBLE HUNG OPEN / OPEN	INSECT SCREEN BY OWNER	SINGLE CLEAR, (OR U-VALUE: 5.71, SHGC: 0.66)	TO SUIT EXISTING OPENING.
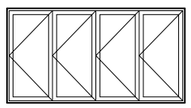	W19 CBW 1529/4R (SPECIAL) NW ELEVATION / KITCHEN WESTERN RED CEDAR BIFOLD OPEN / OPEN / OPEN	HARDWARE COLOUR SATIN CHROME INSECT SCREEN BY OWNER	SINGLE PYROLYTIC LOW-E, (OR U-VALUE: 3.99, SHGC: 0.4)	NON STANDARD WINDOW

		HARDWARE COLOUR	GLAZING	SPECIAL NOTES
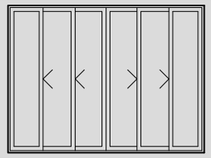	W20 CST 2432 NE ELEVATION / KITCHEN WESTERN RED CEDAR STACKER FIXED / OPEN 2L2R / FIXED	INSECT SCREEN BY OWNER	SINGLE PYROLYTIC LOW-E, (OR U-VALUE: 3.99, SHGC: 0.4)	HINGES TO BE SATIN CHROME
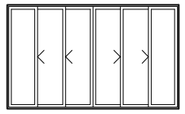	W21 CST 2440 NW ELEVATION / LIVING WESTERN RED CEDAR STACKER FIXED / OPEN 2L2R / FIXED	INSECT SCREEN BY OWNER	SINGLE PYROLYTIC LOW-E, (OR U-VALUE: 3.99, SHGC: 0.4)	HINGES TO BE SATIN CHROME
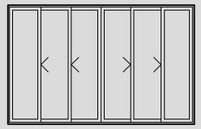	W22 CST 2438 NW ELEVATION / LOUNGE WESTERN RED CEDAR STACKER FIXED / OPEN 2L2R / FIXED	INSECT SCREEN BY OWNER	SINGLE PYROLYTIC LOW-E, (OR U-VALUE: 3.99, SHGC: 0.4)	HINGES TO BE SATIN CHROME
	W34 CDH 1208 SW ELEVATION / PANTRY WESTERN RED CEDAR DOUBLE HUNG OPEN / OPEN	INSECT SCREEN BY OWNER	SINGLE CLEAR, (OR U-VALUE: 5.71, SHGC: 0.66)	TO SUIT EXISTING OPENING.
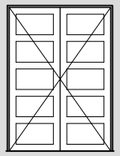	W36 CDF 2317 MRS SE ELEVATION / ENTRTY WESTERN RED CEDAR HINGED OPEN / OPEN	INSECT SCREEN BY OWNER	SINGLE CLEAR, (OR U-VALUE: 5.71, SHGC: 0.66)	OWNER TO COMPLY WITH BASIX REQUIREMENTS WHEN MAKING SELECTION FOR DOOR HINGES TO BE SATIN CHROME

FOR: MR A BUTLER & MRS P BUTLER

AT: 76 HOPETOUN AVENUE, VAUCLUSE NSW 2030

SCALE: 1 : NTS | SHEET: 15 OF 16 | JOB NO: 7643/15 | H | Cape Cod AUSTRALIA

FIRST FLOOR WINDOWS (BASIX A216915)

STANDARD NOTES:

- WINDOWS AND DOORS ARE DRAWN AS VIEWED FROM OUTSIDE
- ALL WINDOWS COME WITH "KEYED ALIKE" LOCKS
- WINDOW OPENINGS NOTED "R" HAVE RESTRICTED OPENINGS TO COMPLY WITH THE NCC 3.9.2.5

CLIENT: .....

CLIENT: .....

BUILDER: .....DATE: .....

TIMBER WINDOWS:

TIMBER WINDOWS, DOOR FRAMES AND DOORS ARE TO BE SUPPLIED CLEAR PRIMED INSIDE AND OUT FOR A PAINT/STAINED FINISH.

STANDARD HARDWARE COLOURS: SATIN CHROME, GOLD, MAHOGANY BRONZE & WHITE.

TERRAIN: 3 WIND LOAD: W 33 N

		HARDWARE COLOUR	GLAZING	SPECIAL NOTES
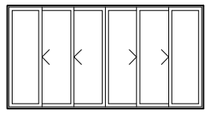	W23 CST 2136 NW ELEVATION / RUMPUS WESTERN RED CEDAR STACKER FIXED/OPEN x 4 (2L2R)/FIXED	INSECT SCREEN BY OWNER	SINGLE PYROLYTIC LOW-E, (OR U-VALUE: 3.99, SHGC: 0.4) REVEAL	SITE CHECK REQUIRED FOR O/A WIDTH HINGES TO BE SATIN CHROME
	W24 CDH 1806 (SPECIAL) NE ELEVATION / RUMPUS WESTERN RED CEDAR DOUBLE HUNG OPEN / OPEN	INSECT SCREEN BY OWNER	SINGLE PYROLYTIC LOW-E, (OR U-VALUE: 3.99, SHGC: 0.4)	SITE CHECK REQUIRED FOR O/A HEIGHT TO SUIT EXISTING SANDSTONE
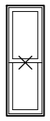	W25 CDH 1806 (SPECIAL) NE ELEVATION / RUMPUS WESTERN RED CEDAR DOUBLE HUNG OPEN / OPEN	INSECT SCREEN BY OWNER	SINGLE PYROLYTIC LOW-E, (OR U-VALUE: 3.99, SHGC: 0.4)	SITE CHECK REQUIRED FOR O/A HEIGHT TO SUIT EXISTING SANDSTONE
	W26 CAW 0709 SW ELEVATION / SHOWER WESTERN RED CEDAR AWNING OPEN	INSECT SCREEN BY OWNER	SINGLE CLEAR, (OR U-VALUE: 5.71, SHGC: 0.66)	TRANSLUCENT FILM BY BUILDER. SITE CHECK. TO SUIT EXISTING HEIGHT AND WIDTH.
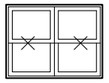	W27 CDDH 1215 NW ELEVATION / STUDY WESTERN RED CEDAR DOUBLE HUNG OPEN / OPEN	INSECT SCREEN BY OWNER	SINGLE PYROLYTIC LOW-E, (OR U-VALUE: 3.99, SHGC: 0.4)	TO SUIT EXISTING OPENING.
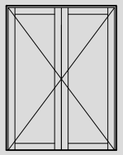	W28 CDF 2317-MRS NE ELEVATION / STUDY WESTERN RED CEDAR HINGED OPEN / OPEN	INSECT SCREEN BY OWNER	SINGLE PYROLYTIC LOW-E, (OR U-VALUE: 3.99, SHGC: 0.4)	TO SUIT EXISTING OPENING. HINGES TO BE SATIN CHROME
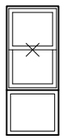	W29 CDH 2108T NW ELEVATION / RUMPUS WESTERN RED CEDAR DOUBLE HUNG OPEN / OPEN /FIXED LOWER	INSECT SCREEN BY OWNER	SINGLE PYROLYTIC LOW-E, (OR U-VALUE: 3.99, SHGC: 0.4)	SITE CHECK. TO SUIT MAX WIDTH.
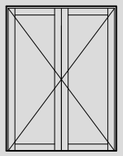	W31 CDF 1915-MRS NE ELEVATION / HALL 2 WESTERN RED CEDAR HINGED OPEN / OPEN	INSECT SCREEN BY OWNER	SINGLE PYROLYTIC LOW-E, (OR U-VALUE: 3.99, SHGC: 0.4)	TO SUIT EXISTING OPENING. HINGES TO BE SATIN CHROME
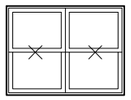	W32 CDDH 1419 NE ELEVATION /GUEST BED WESTERN RED CEDAR DOUBLE HUNG OPEN / OPEN	INSECT SCREEN BY OWNER	SINGLE PYROLYTIC LOW-E, (OR U-VALUE: 3.99, SHGC: 0.4)	TO SUIT EXISTING OPENING.

		HARDWARE COLOUR	GLAZING	SPECIAL NOTES
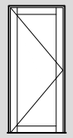	W33 CDF 2008 NW ELEVATION /GUEST BED WESTERN RED CEDAR HINGED OPEN	INSECT SCREEN BY OWNER	SINGLE PYROLYTIC LOW-E, (OR U-VALUE: 3.99, SHGC: 0.4)	TO SUIT EXISTING OPENING. HINGES TO BE SATIN CHROME

FOR: MR A BUTLER & MRS P BUTLER

AT: 76 HOPETOUN AVENUE, VAUCLUSE NSW 2030

SCALE: 1 : NTS

JOB NO: 7643/15

H

Cape Cod AUSTRALIA

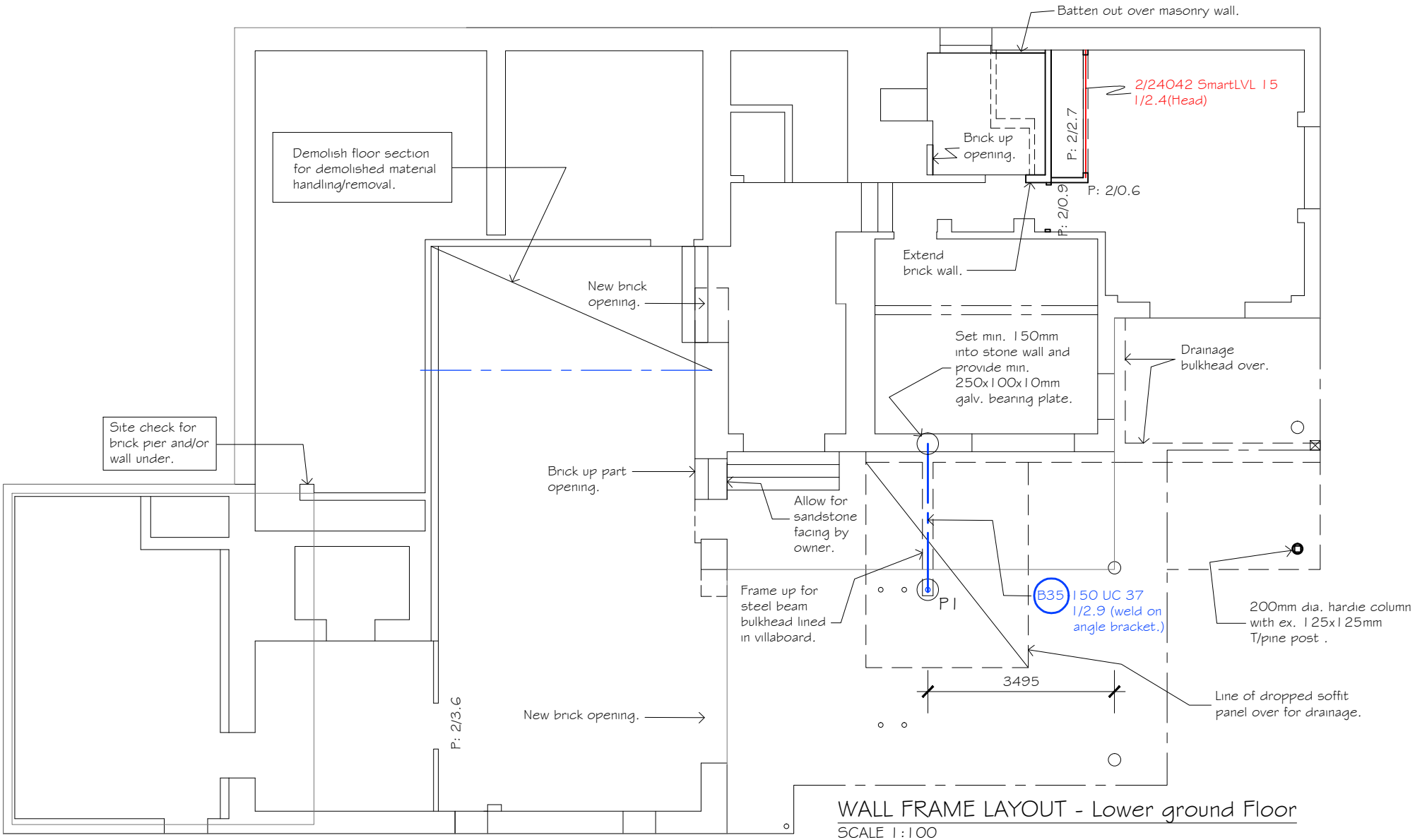

WALL FRAME LAYOUT - Lower ground Floor

SCALE 1:100

* 90x45 F5 studs at 450mm centres.
* Wall frames secured to masonry walls with M10 dynabolts at 600mm centres.
* LVL - denotes tilling smart lvl.
* 'P1' - denotes to provide galvanised 90x5.5mm CHS supported on mass concrete pad set down to solid rock.

FOR: MR. A & MRS. P BUTLER	FINAL CONSTRUCTION - 18.09.15	PREPARED - 13.8.15 ap	SHEET: 1 OF 30
AT: 76 HOPETOUN AVE, VAUCLUSE. NSW. 2030.		JOB NO: 7643/15 C	Cape Cod

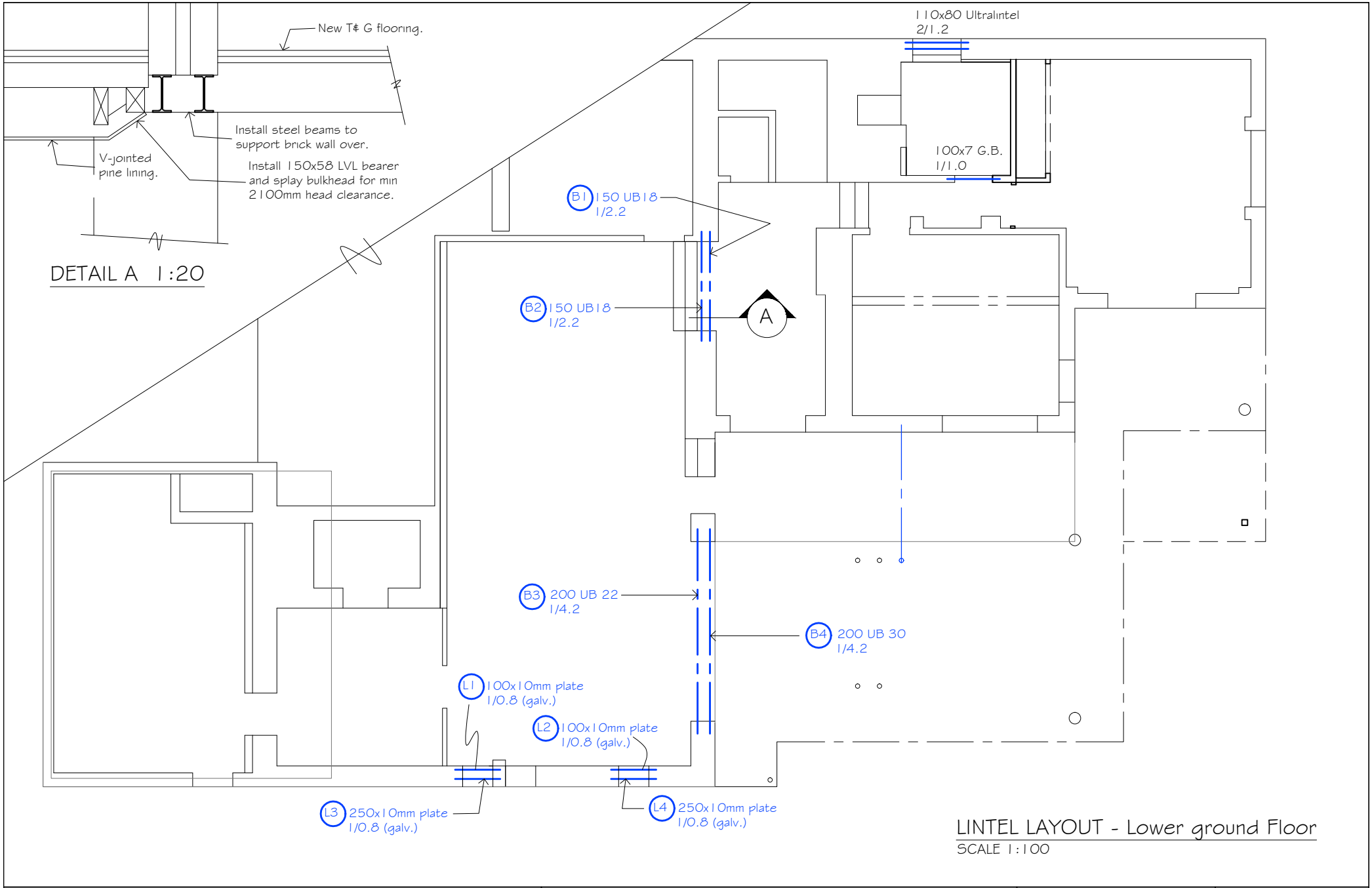

LINTEL LAYOUT - Lower ground Floor

SCALE 1:100

FOR: MR. A & MRS. P BUTLER	FINAL CONSTRUCTION - 18.09.15	PREPARED - 13.8.15 ap	SHEET: 2 OF 30
AT: 76 HOPETOUN AVE, VAUCLUSE. NSW. 2030.		JOB NO: 7643/15 C	Cape Cod

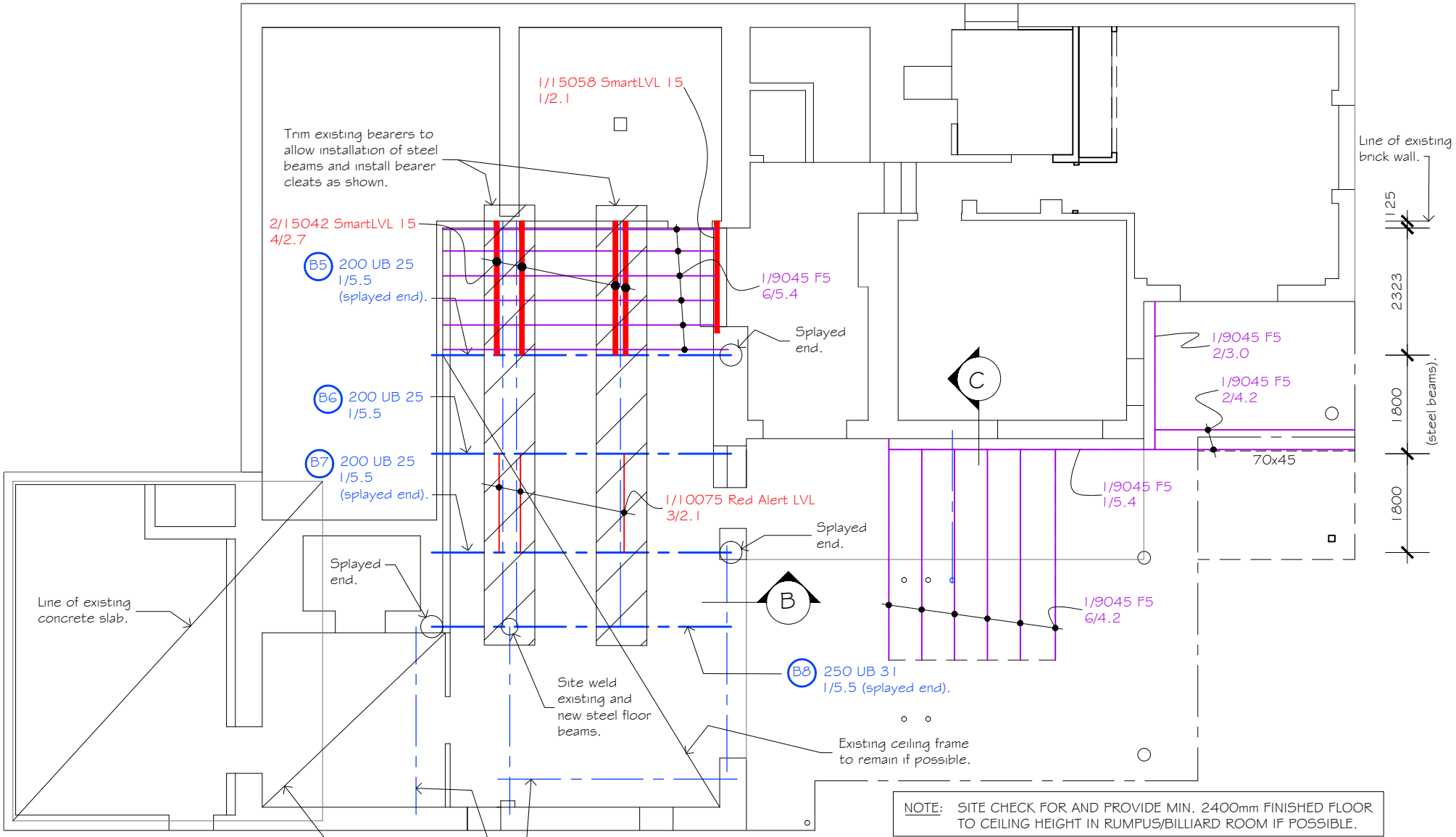

NOTE: SITE CHECK FOR AND PROVIDE MIN. 2400mm FINISHED FLOOR TO CEILING HEIGHT IN RUMPUS/BILLIARD ROOM IF POSSIBLE.

CEILING FRAME LAYOUT - Lower Ground Floor

SCALE 1:100

* Ceiling joists at 450mm centres.

FOR: MR. A & MRS. P BUTLER	FINAL CONSTRUCTION - 18.09.15	PREPARED - 13.8.15 ap	SHEET: 3 OF 30
AT: 76 HOPETOUN AVE, VAUCLUSE. NSW. 2030.		JOB NO: 7643/15 C	Cape Cod

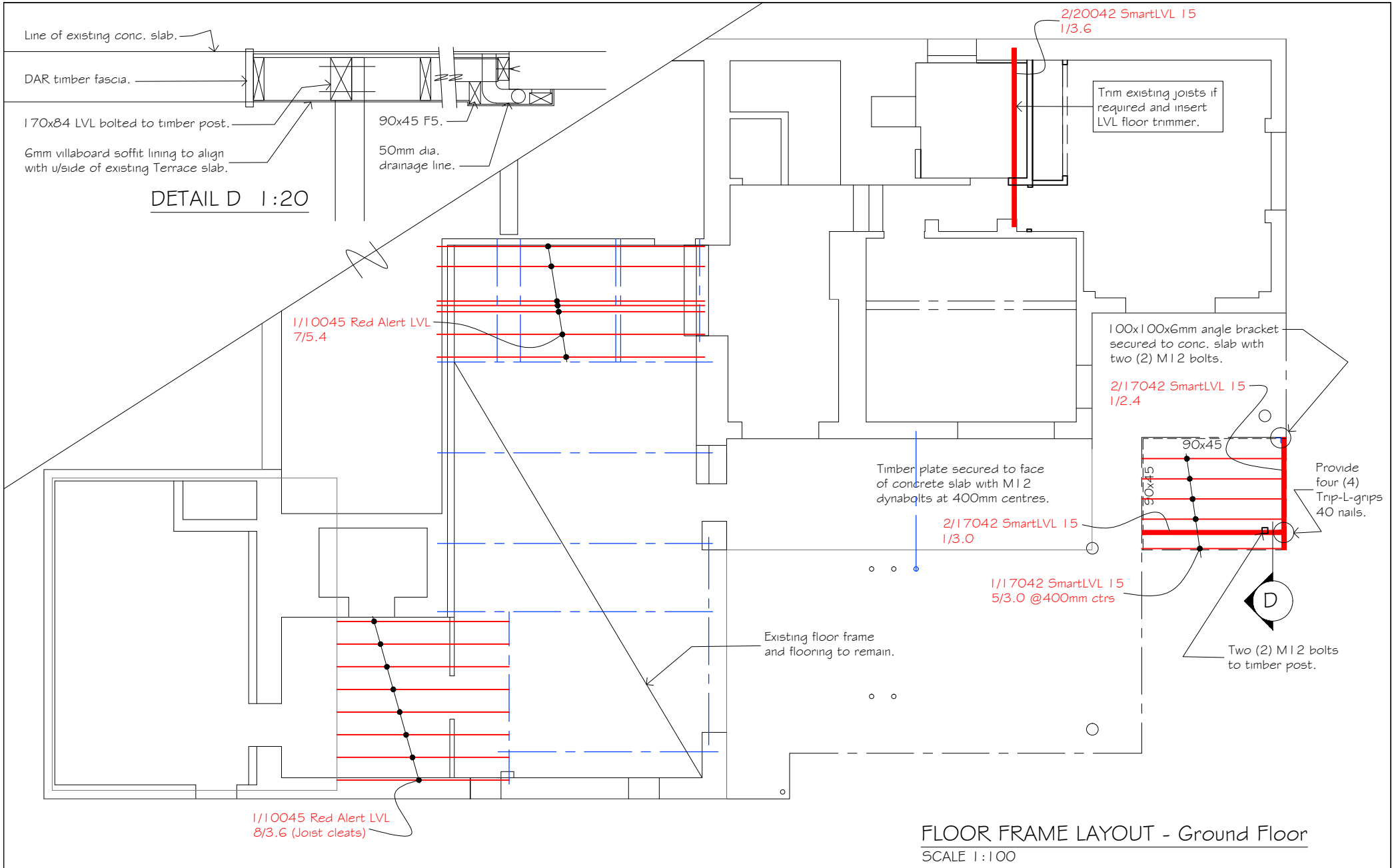

FLOOR FRAME LAYOUT - Ground Floor

SCALE 1:100

FOR: MR. A & MRS. P BUTLER	FINAL CONSTRUCTION - 18.09.15	PREPARED - 13.8.15 ap	SHEET: 4 OF 30
AT: 76 HOPETOUN AVE, VAUCLUSE. NSW. 2030.		JOB NO: 7643/15 C	Cape Cod

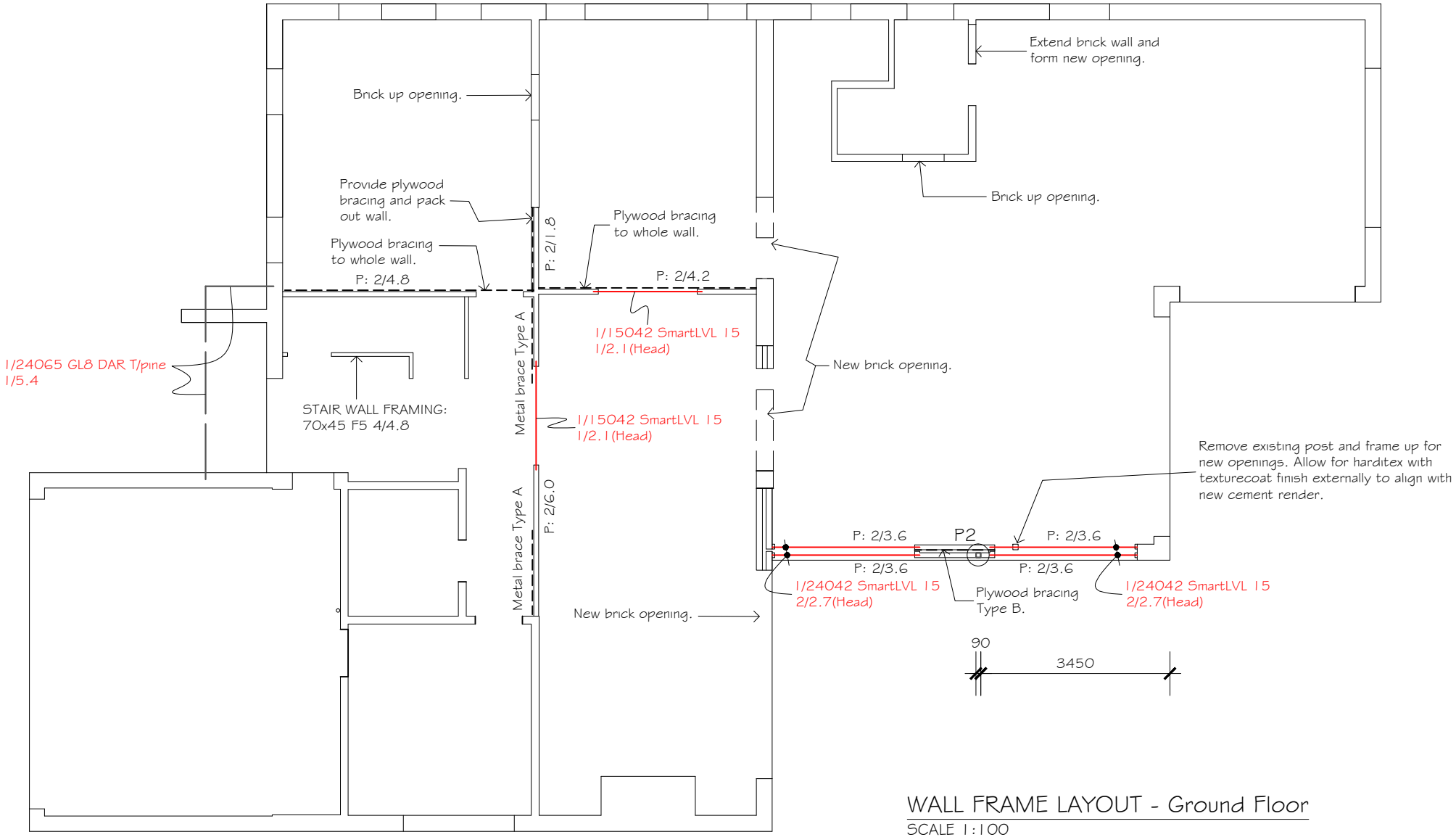

WALL FRAME LAYOUT - Ground Floor

SCALE 1:100

* 90x45 F5 studs at 450mm centres.
* Wall frames secured to masonry walls with M10 dynabolts at 600mm centres.
* LVL - denotes tilling smart lvl.
* 'P2' - 90x90x5mm SHS

FOR: MR. A & MRS. P BUTLER	FINAL CONSTRUCTION - 18.09.15	PREPARED - 13.8.15 ap	SHEET: 5 OF 30
AT: 76 HOPETOUN AVE, VAUCLUSE. NSW. 2030.		JOB NO: 7643/15 C	Cape Cod

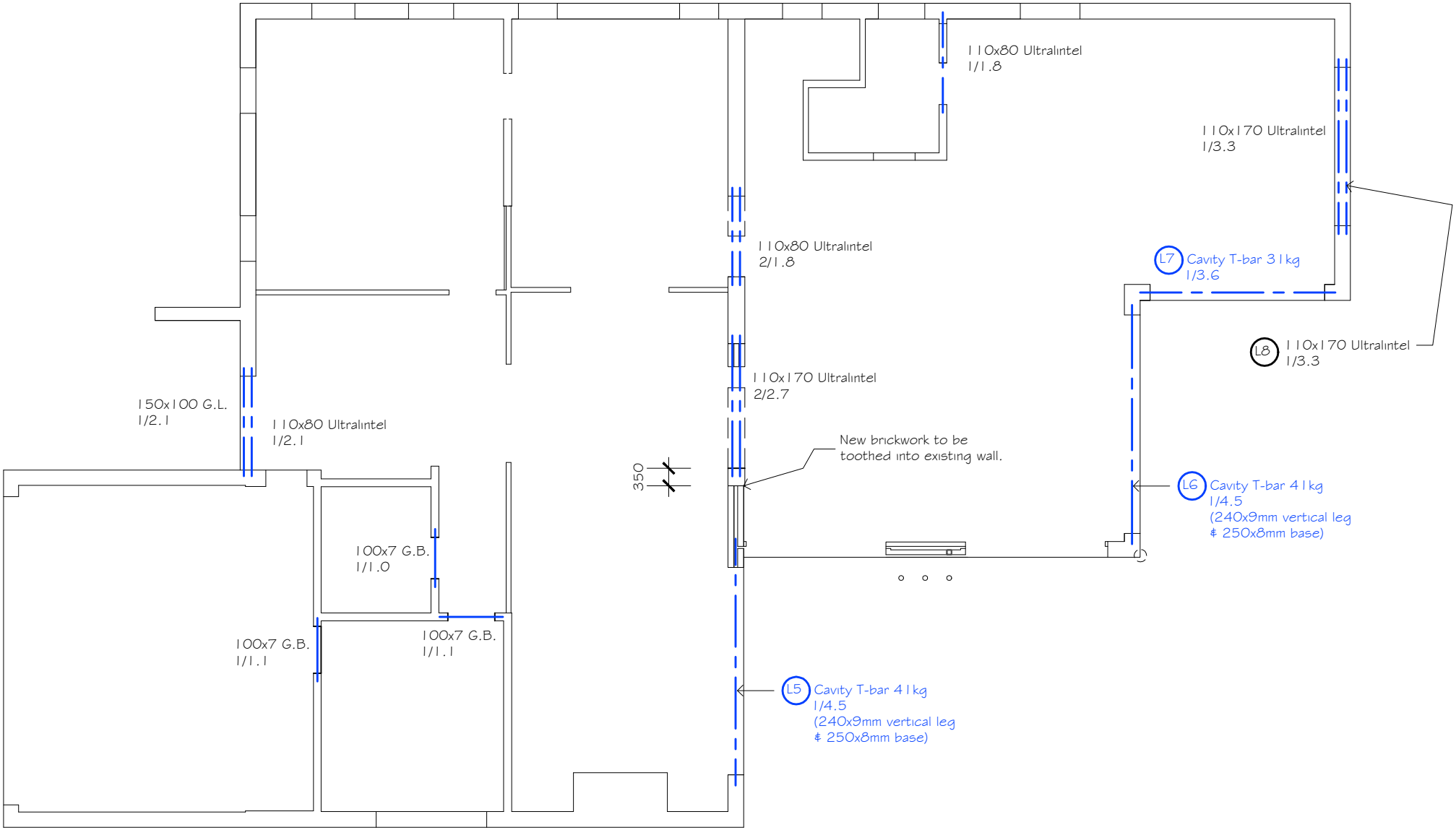

LINTEL LAYOUT - Ground Floor

SCALE 1:100

FOR: MR. A & MRS. P BUTLER	FINAL CONSTRUCTION - 18.09.15	PREPARED - 13.8.15 ap	SHEET: 6 OF 30
AT: 76 HOPETOUN AVE, VAUCLUSE. NSW. 2030.		JOB NO: 7643/15 C	Cape Cod

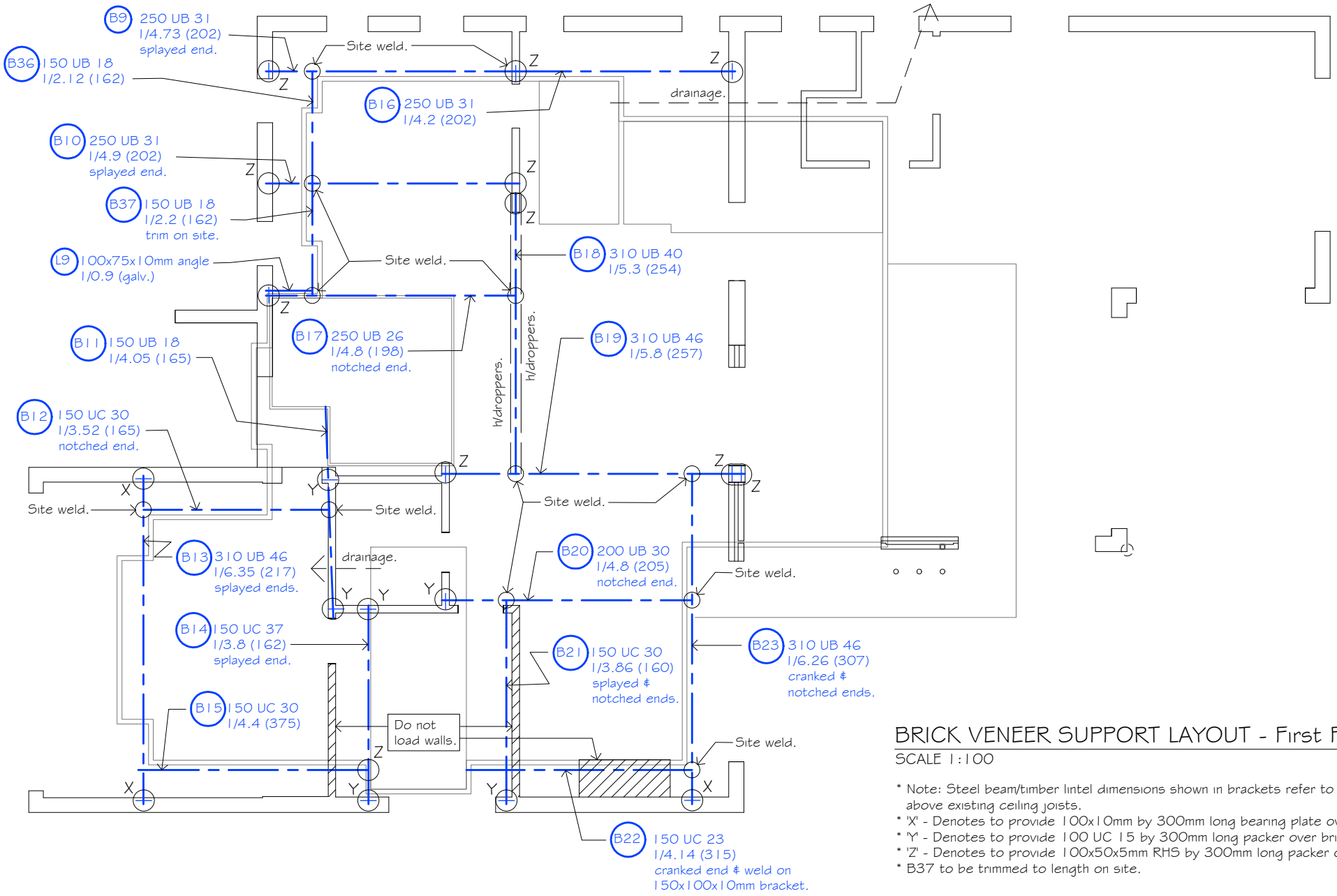

BRICK VENEER SUPPORT LAYOUT - First Floor

SCALE 1:100

* Note: Steel beam/timber lintel dimensions shown in brackets refer to height above existing ceiling joists.
* 'X' - Denotes to provide 100x10mm by 300mm long bearing plate over brickwork.
* 'Y' - Denotes to provide 100 UC 15 by 300mm long packer over brickwork.
* 'Z' - Denotes to provide 100x50x5mm RHS by 300mm long packer over brickwork.
* B37 to be trimmed to length on site.

FOR: MR. A & MRS. P BUTLER	FINAL CONSTRUCTION - 18.09.15	PREPARED - 13.8.15 ap	SHEET: 7 OF 30
AT: 76 HOPETOUN AVE, VAUCLUSE. NSW. 2030.		JOB NO: 7643/15 C	Cape Cod

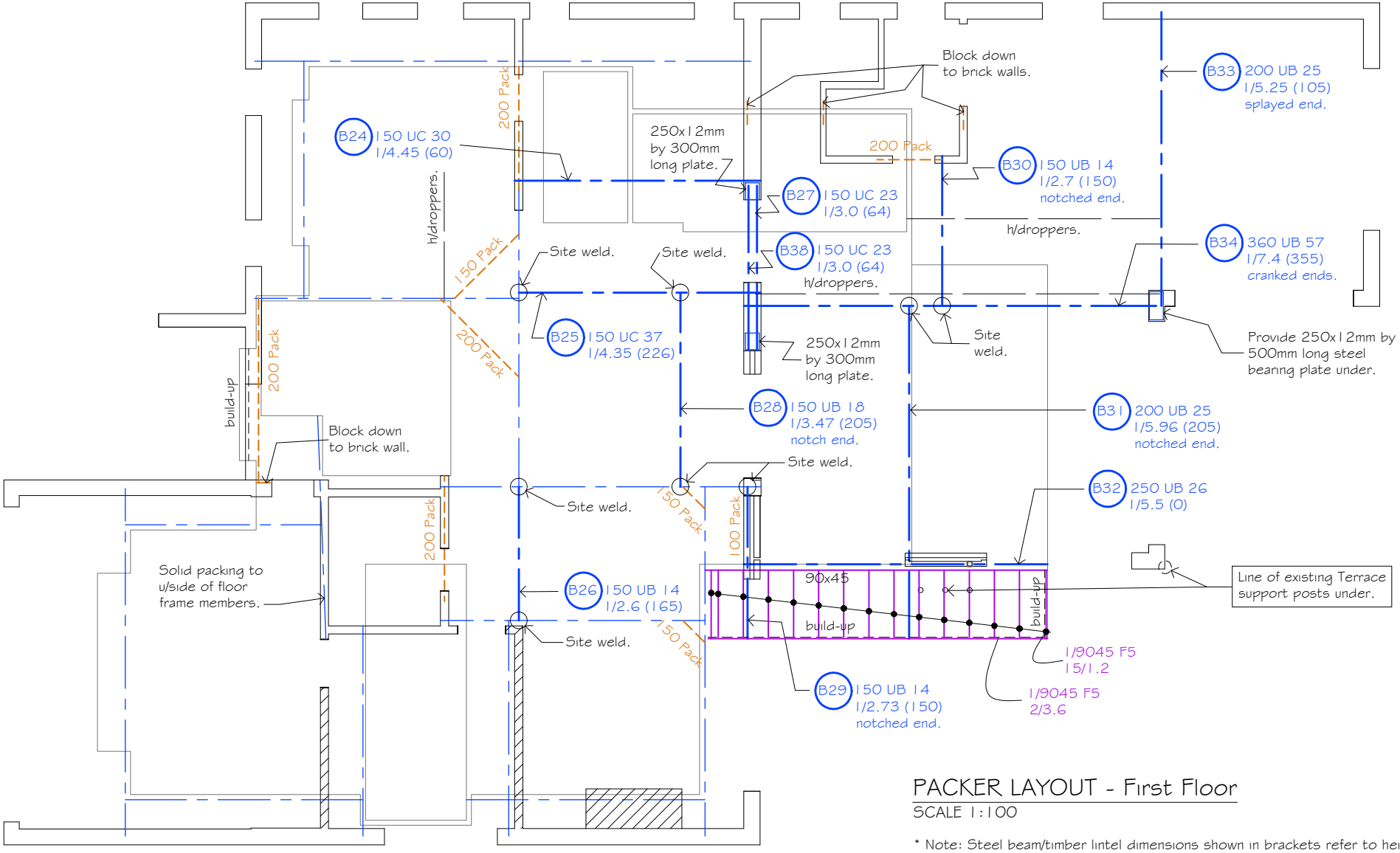

PACKER LAYOUT - First Floor

SCALE 1:100

* Note: Steel beam/timber lintel dimensions shown in brackets refer to height above existing ceiling joists.
* Provide min. 45x90 plate over steel beams for fixing of floor joists.
* B26 to be trimmed to length on site.

FOR: MR. A & MRS. P BUTLER	FINAL CONSTRUCTION - 18.09.15	PREPARED - 13.8.15 ap	SHEET: 8 OF 30
AT: 76 HOPETOUN AVE, VAUCLUSE. NSW. 2030.		JOB NO: 7643/15 C	Cape Cod

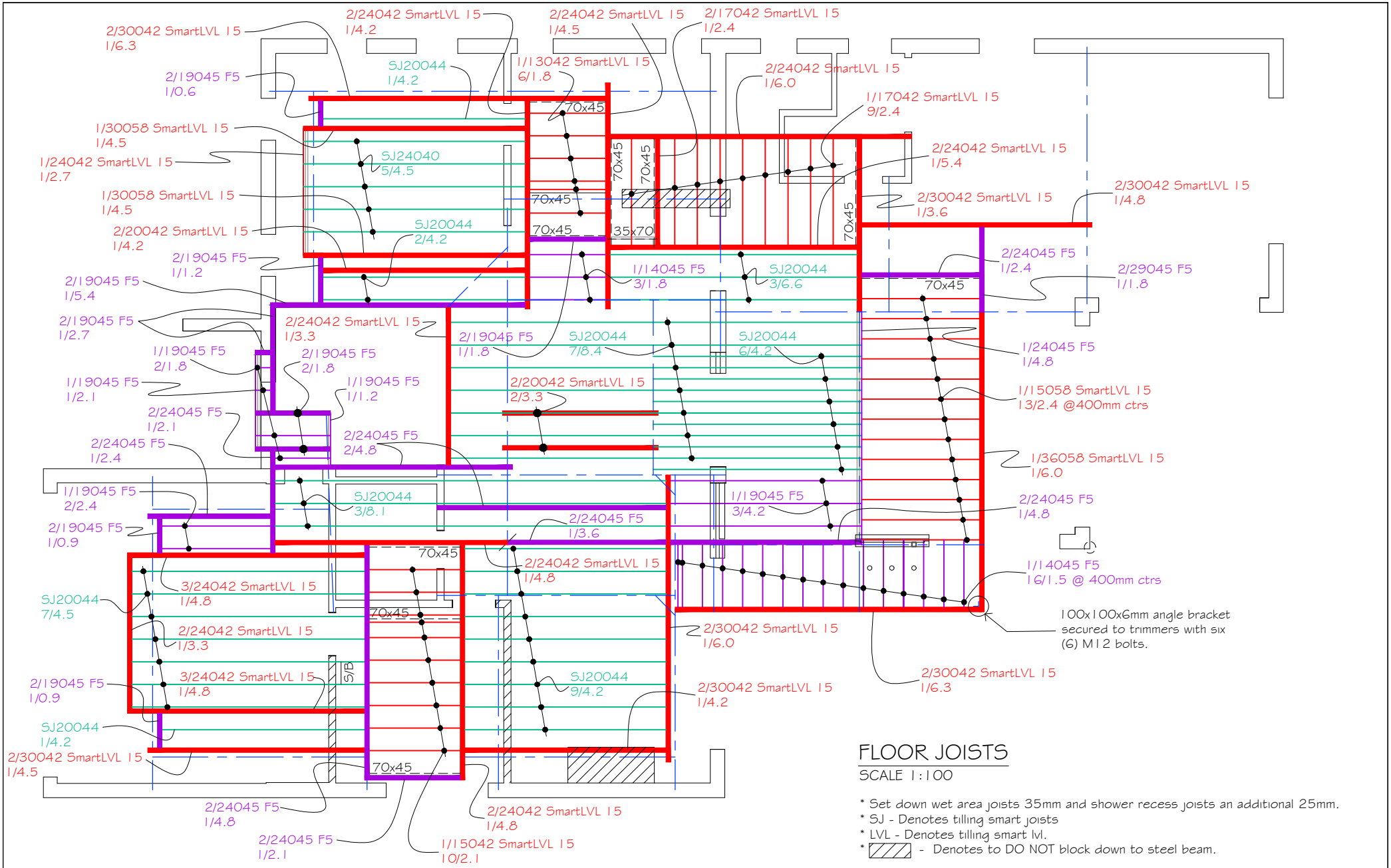

FLOOR JOISTS

SCALE 1:100

* Set down wet area joists 35mm and shower recess joists an additional 25mm.
* SJ - Denotes tilling smart joists
* LVL - Denotes tilling smart lvl.
* ▨ - Denotes to DO NOT block down to steel beam.

FOR: MR. A & MRS. P BUTLER	FINAL CONSTRUCTION - 18.09.15	PREPARED - 13.8.15 ap	SHEET: 9 OF 30
AT: 76 HOPETOUN AVE, VAUCLUSE. NSW. 2030.		JOB NO: 7643/15 C	Cape Cod

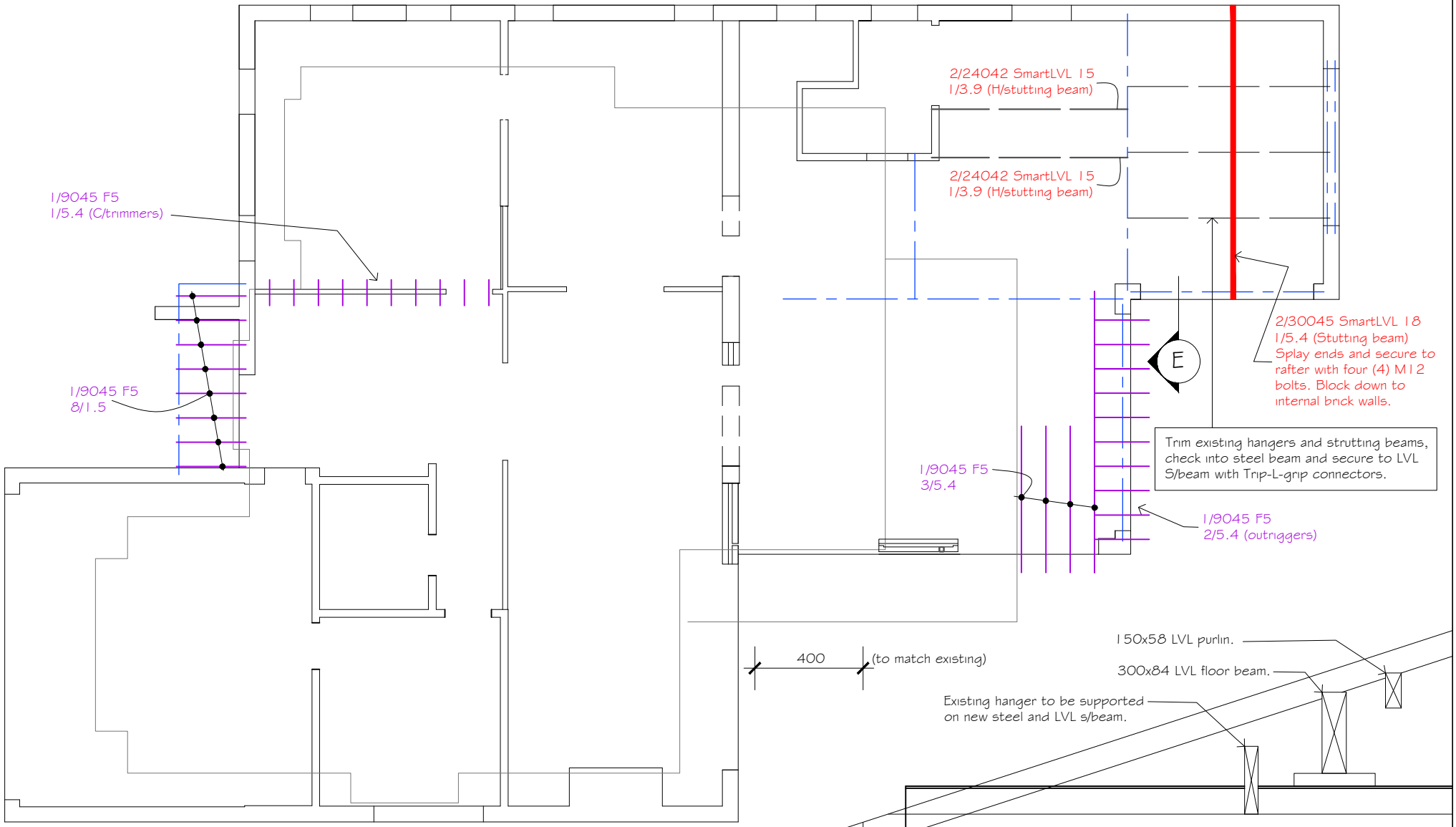

CEILING FRAME LAYOUT - Ground Floor

SCALE 1:100

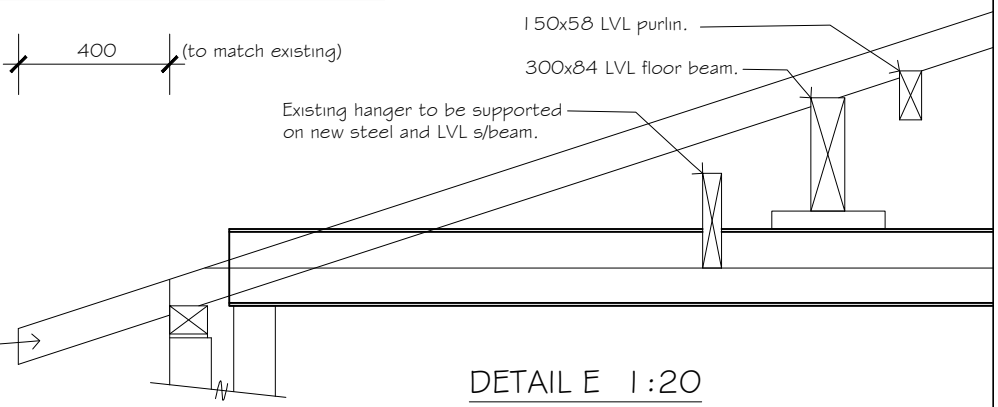

DETAIL E 1:20

FOR: MR. A & MRS. P BUTLER	FINAL CONSTRUCTION - 18.09.15	PREPARED - 13.8.15 ap	SHEET: 10 OF 30
AT: 76 HOPETOUN AVE, VAUCLUSE. NSW. 2030.		JOB NO: 7643/15 C	Cape Cod

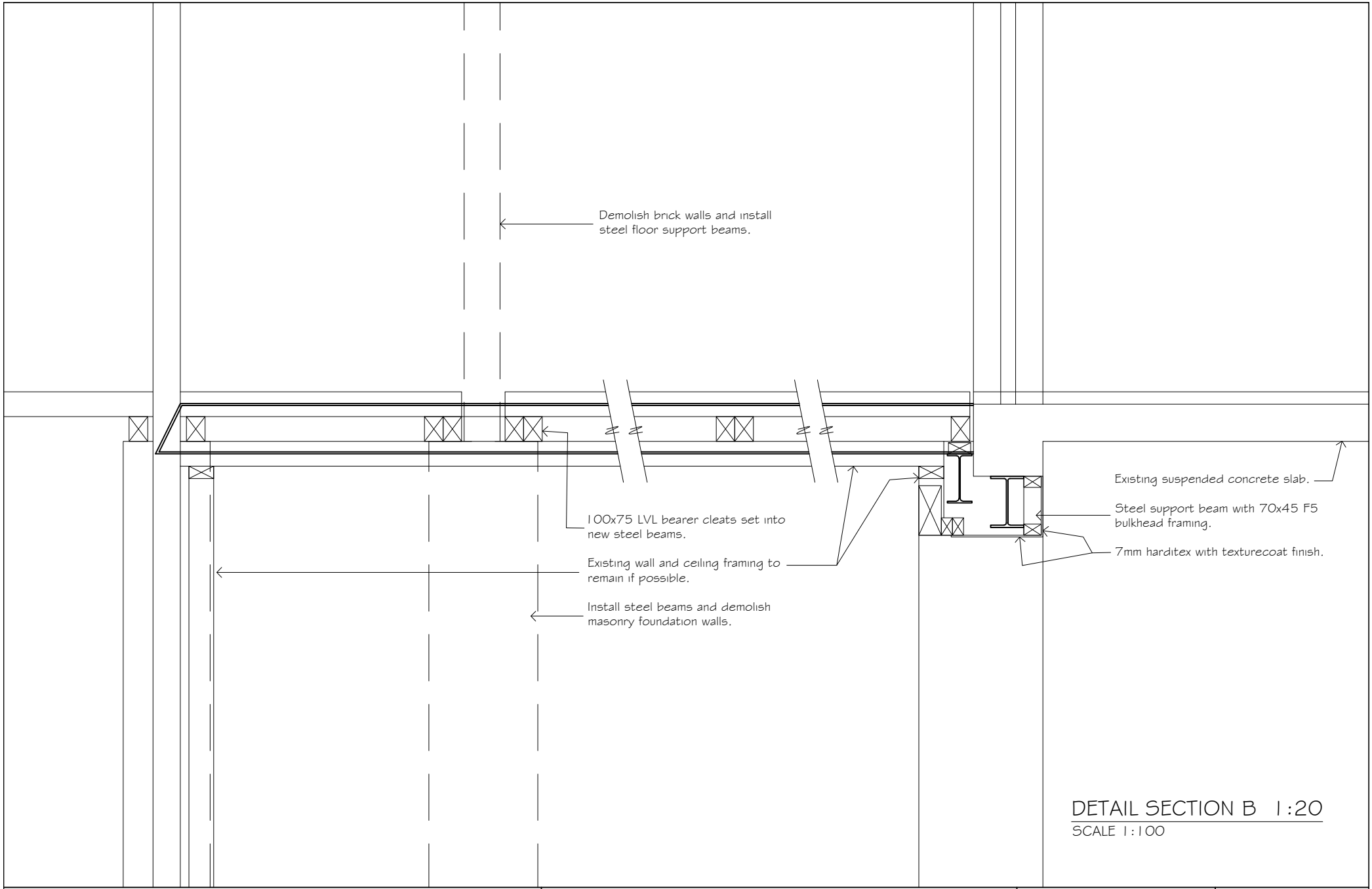

DETAIL SECTION B 1:20

SCALE 1:100

FOR: MR. A & MRS. P BUTLER	FINAL CONSTRUCTION - 18.09.15	PREPARED - 13.8.15 ap	SHEET: 11 OF 30
AT: 76 HOPETOUN AVE, VAUCLUSE. NSW. 2030.		JOB NO: 7643/15 C	Cape Cod

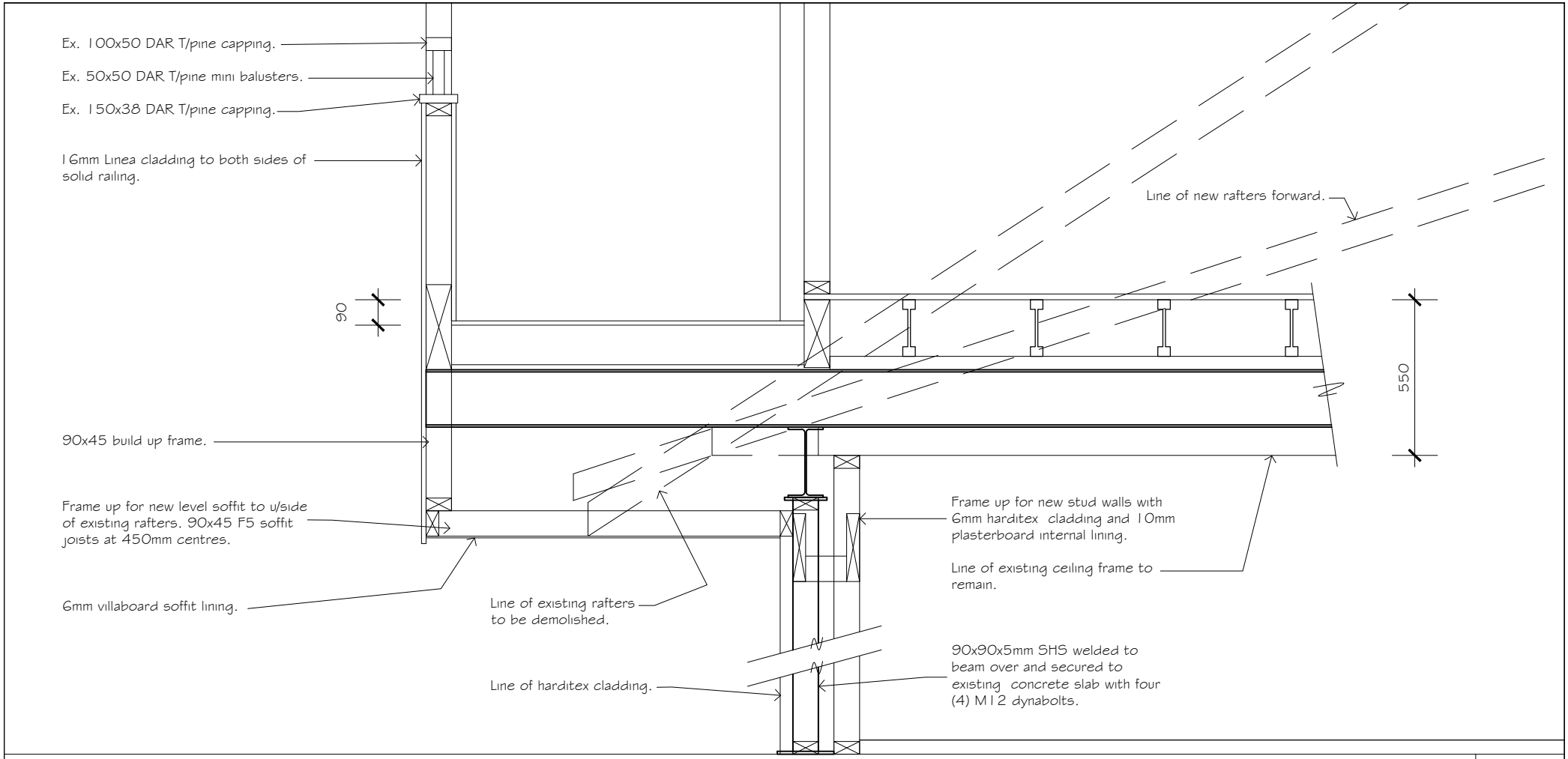

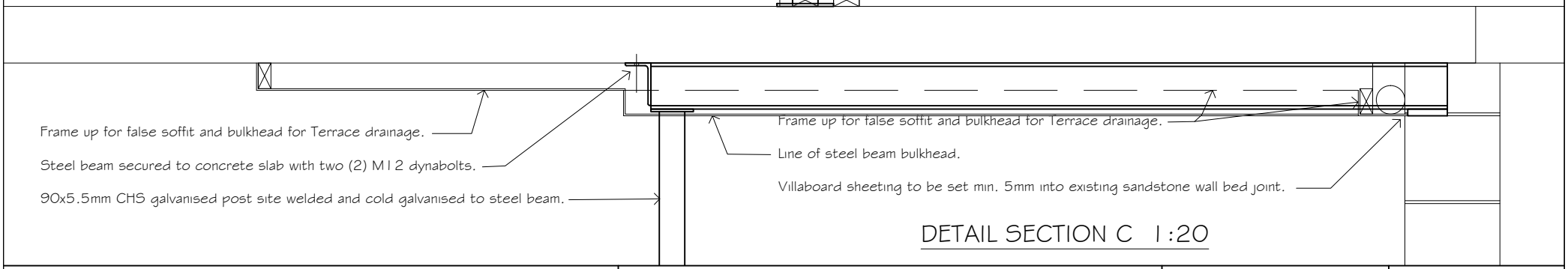

DETAIL SECTION C 1:20

FOR: MR. A & MRS. P BUTLER	FINAL CONSTRUCTION - 18.09.15	PREPARED - 13.8.15 ap	SHEET: 12 OF 30
AT: 76 HOPETOUN AVE, VAUCLUSE. NSW. 2030.		JOB NO: 7643/15 C	Cape Cod

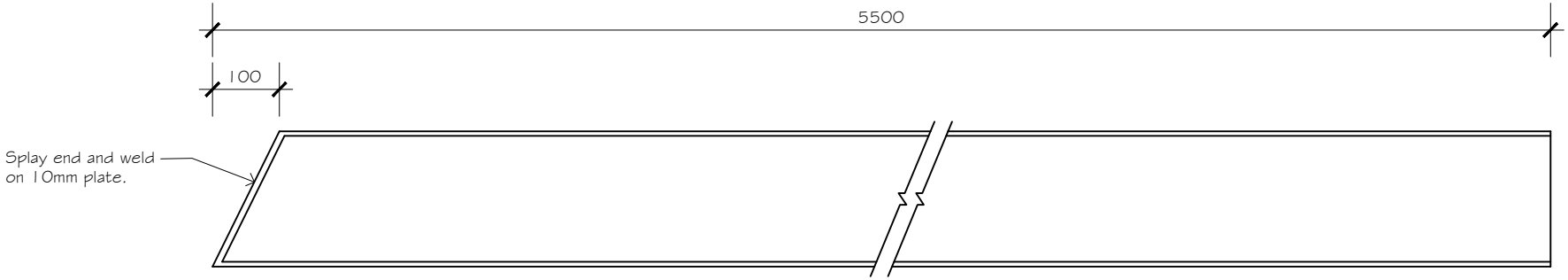

BEAM 5: 200 UB 25

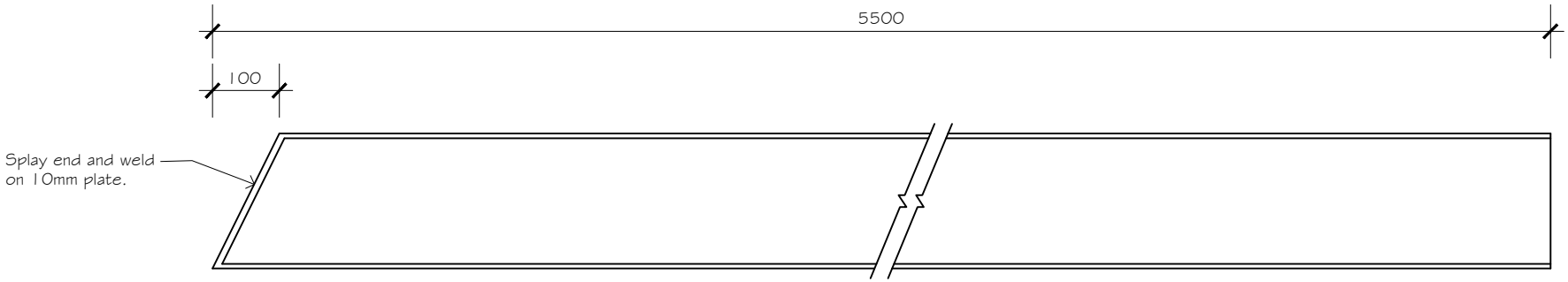

BEAM 7: 200 UB 25

STEELWORK DETAILS 1:10

FOR: MR. A & MRS. P BUTLER	FINAL CONSTRUCTION - 18.09.15	PREPARED - 13.8.15 ap	SHEET: 13 OF 30
AT: 76 HOPETOUN AVE, VAUCLUSE. NSW. 2030.		JOB NO: 7643/15 C	Cape Cod

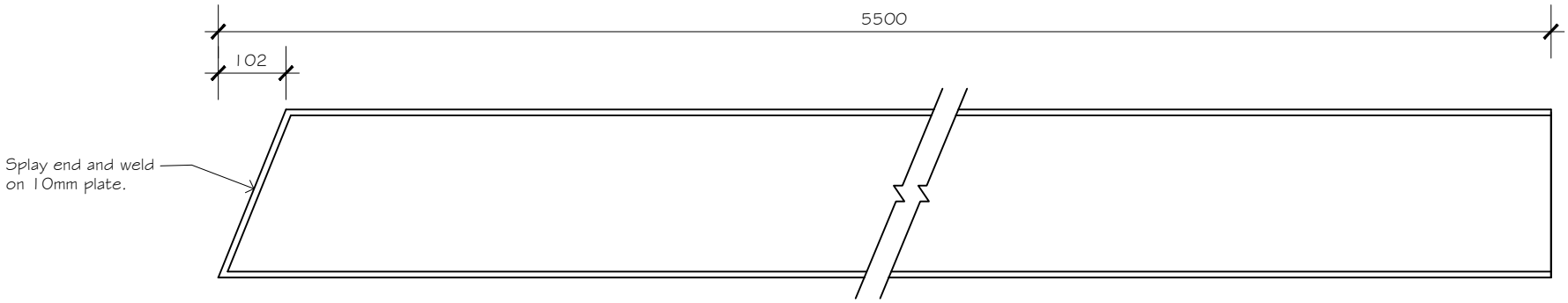

BEAM 8: 250 UB 31

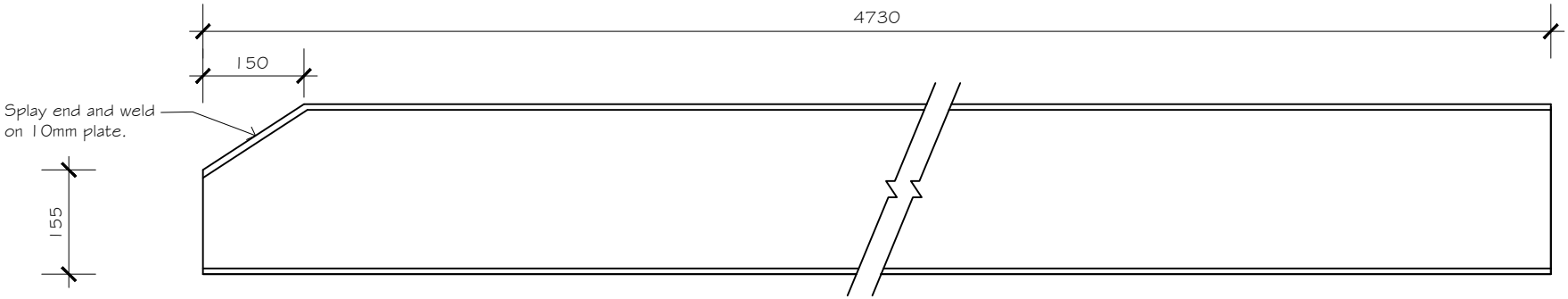

BEAM 9: 250 UB 31

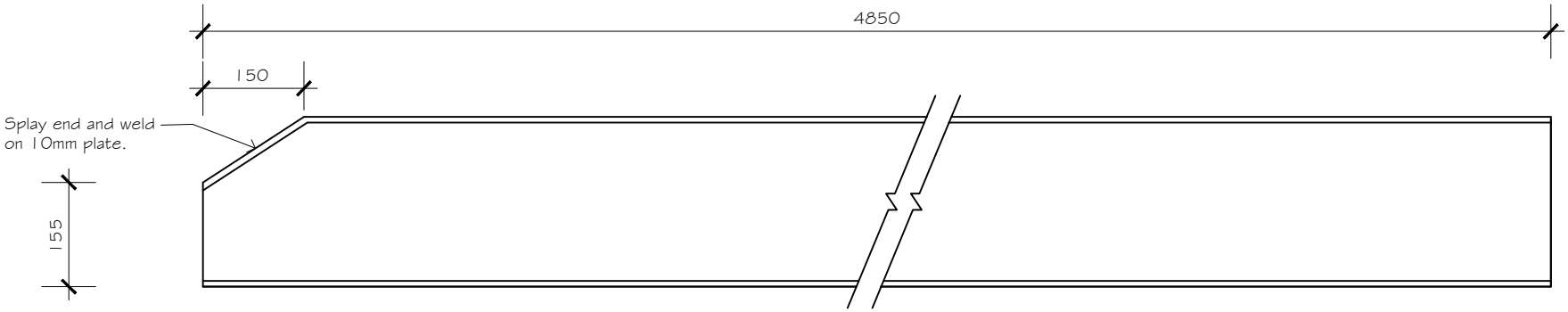

BEAM 10: 250 UB 31

STEELWORK DETAILS 1:10

FOR: MR. A & MRS. P BUTLER	FINAL CONSTRUCTION - 18.09.15	PREPARED - 13.8.15 ap	SHEET: 14 OF 30
AT: 76 HOPETOUN AVE, VAUCLUSE. NSW. 2030.		JOB NO: 7643/15 C	Cape Cod

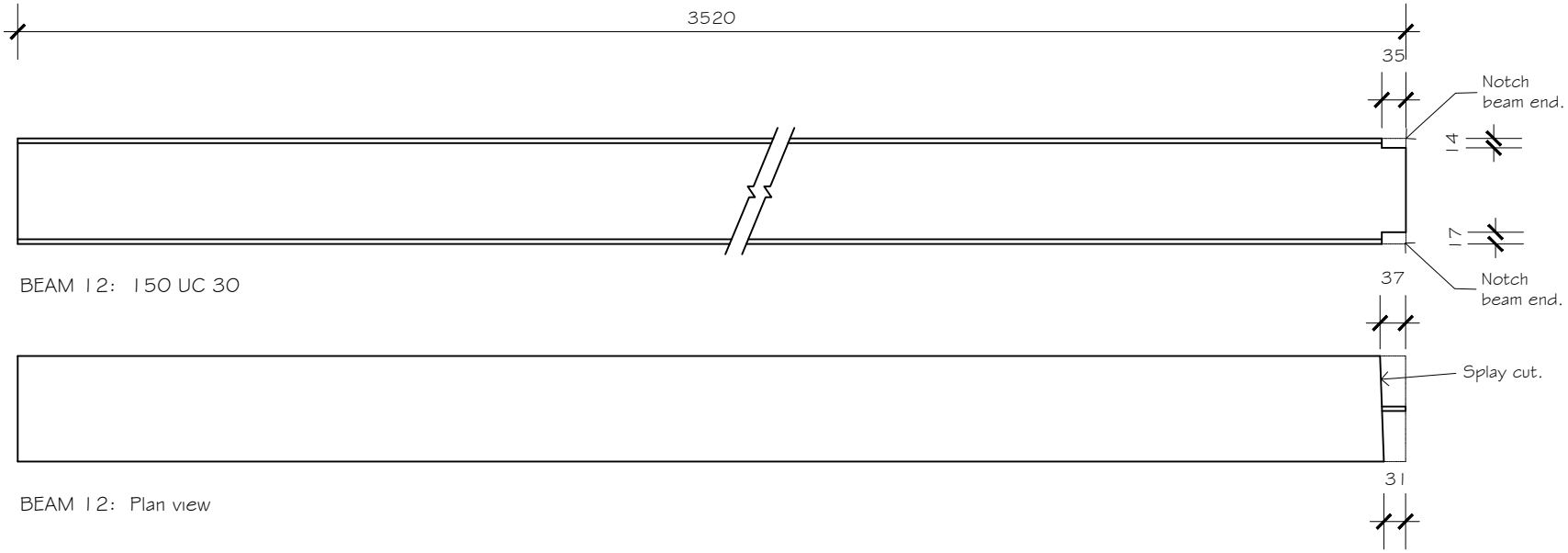

BEAM 12: 150 UC 30

BEAM 12: Plan view

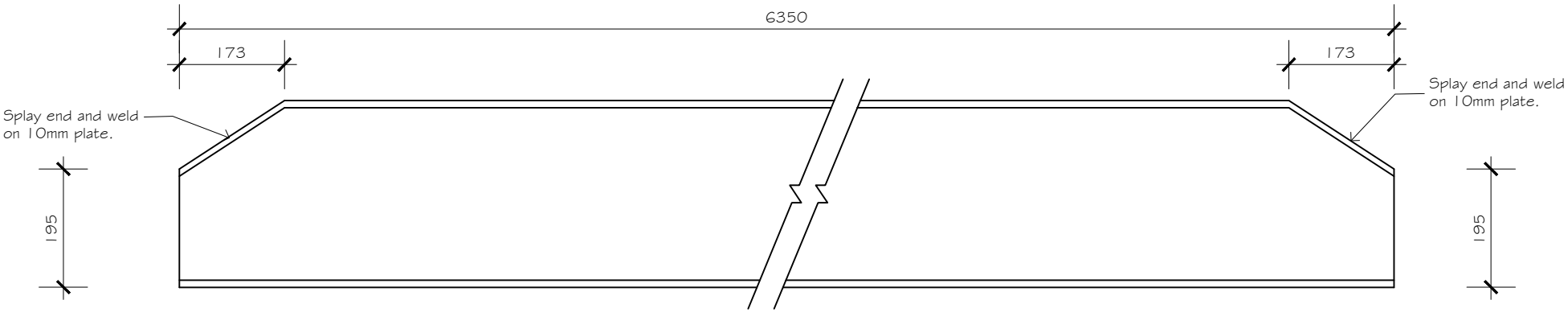

BEAM 13: 310 UB 46

STEELWORK DETAILS 1:10

FOR: MR. A & MRS. P BUTLER	FINAL CONSTRUCTION - 18.09.15	PREPARED - 13.8.15 ap	SHEET: 15 OF 30
AT: 76 HOPETOUN AVE, VAUCLUSE. NSW. 2030.		JOB NO: 7643/15 C	Cape Cod

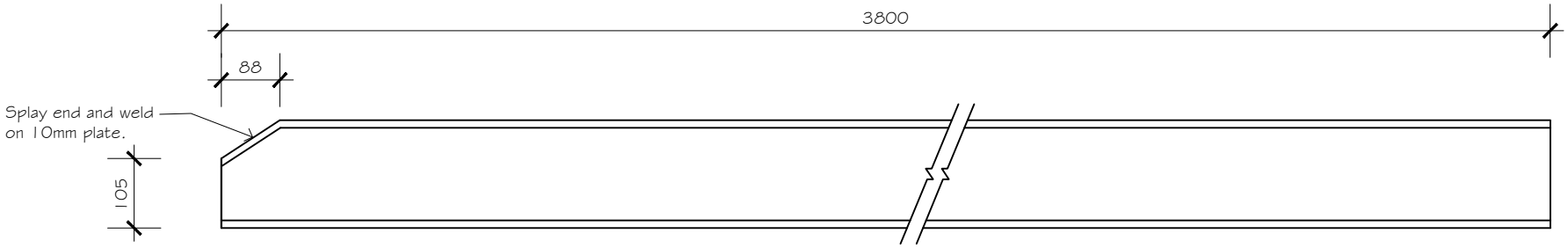

BEAM 14: 150 UC 37

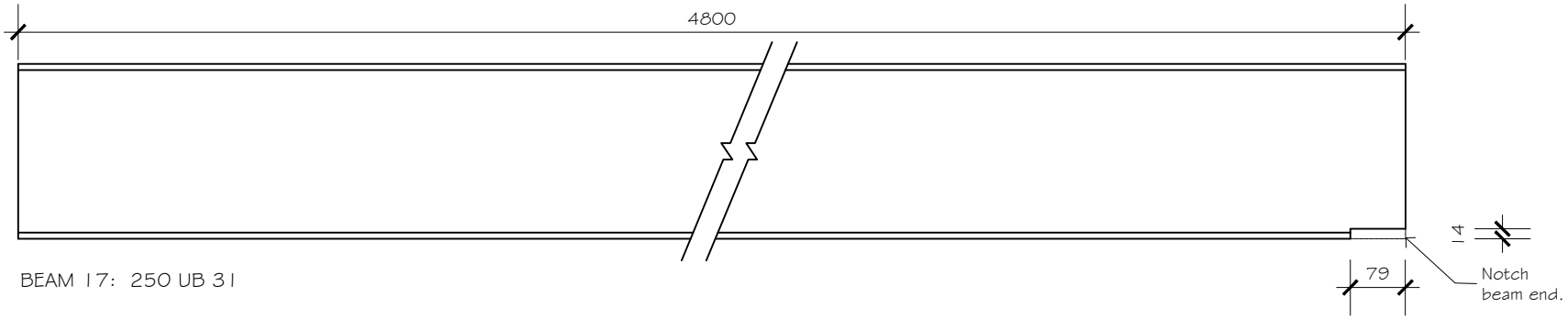

BEAM 17: 250 UB 31

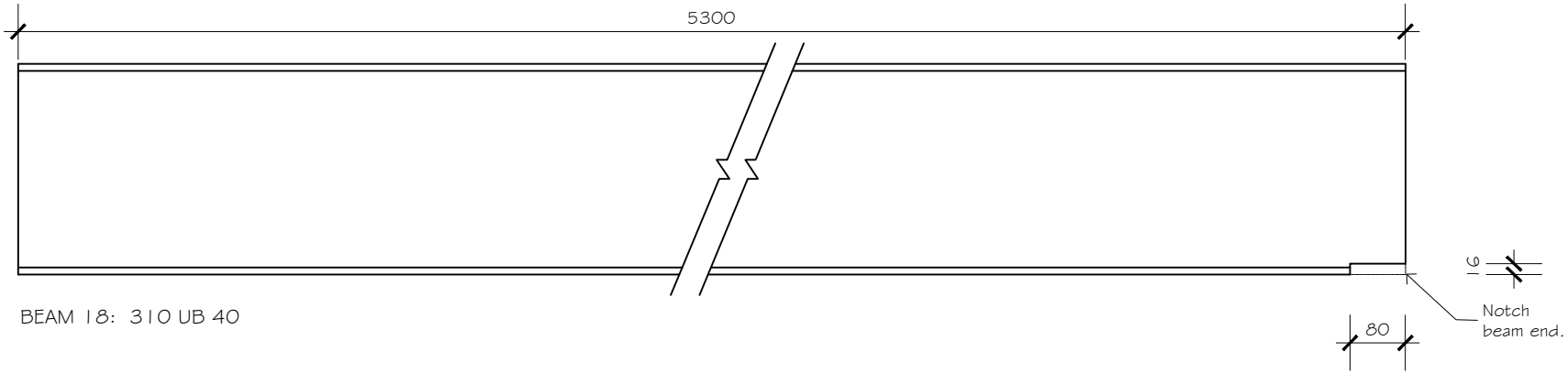

BEAM 18: 310 UB 40

STEELWORK DETAILS 1:10

FOR: MR. A & MRS. P BUTLER	FINAL CONSTRUCTION - 18.09.15	PREPARED - 13.8.15 ap	SHEET: 16 OF 30
AT: 76 HOPETOUN AVE, VAUCLUSE. NSW. 2030.		JOB NO: 7643/15 C	Cape Cod

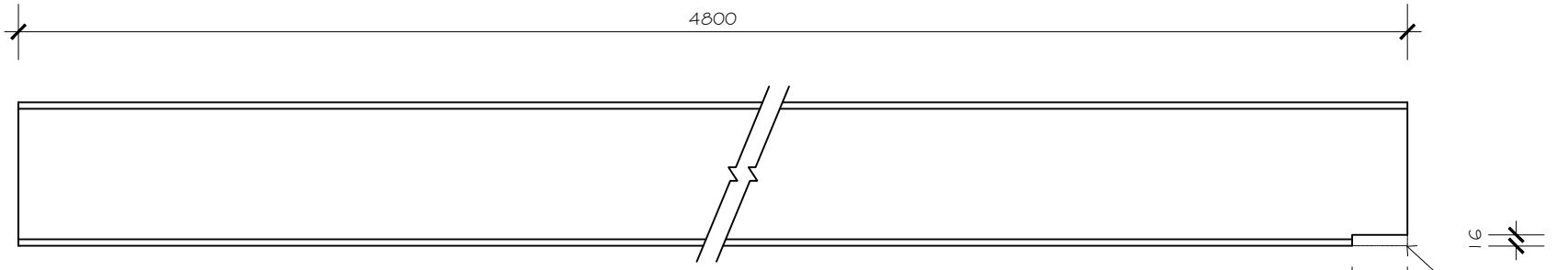

BEAM 20: 200 UB 30

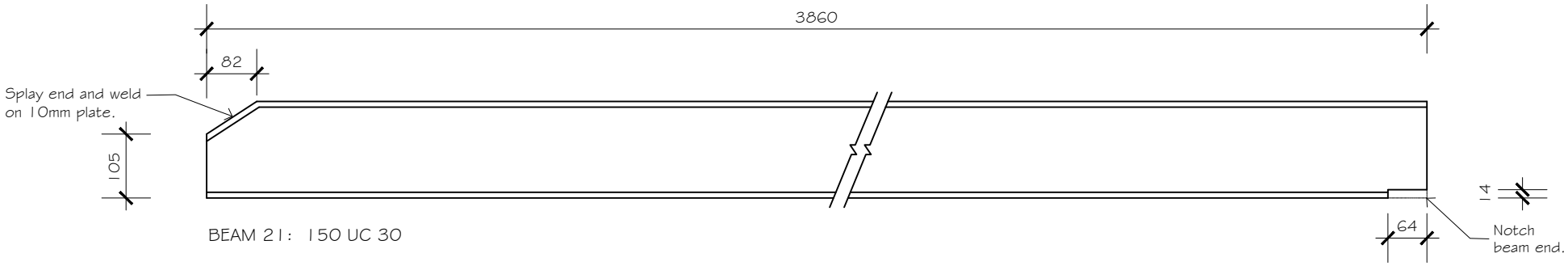

BEAM 21: 150 UC 30

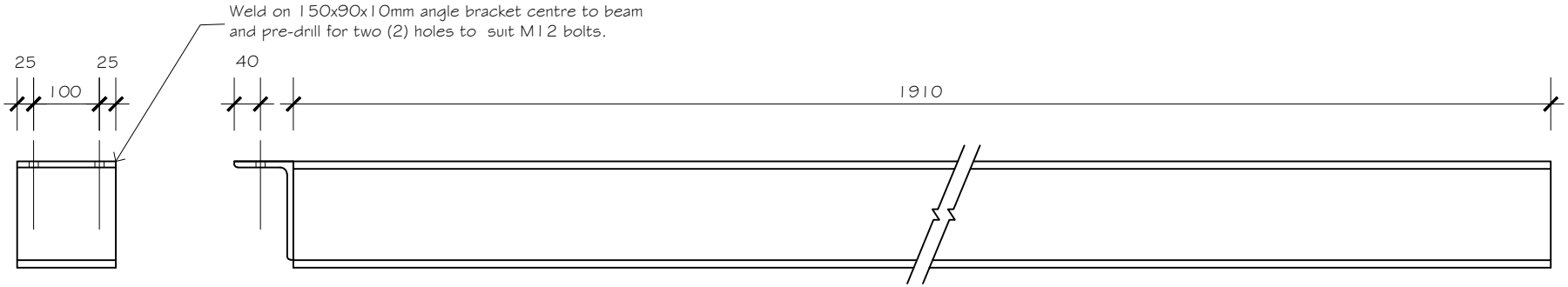

BEAM 35: 150 UC 37

STEELWORK DETAILS 1:10

FOR: MR. A & MRS. P BUTLER	FINAL CONSTRUCTION - 18.09.15	PREPARED - 13.8.15 ap	SHEET: 17 OF 30
AT: 76 HOPETOUN AVE, VAUCLUSE. NSW. 2030.		JOB NO: 7643/15 C	Cape Cod

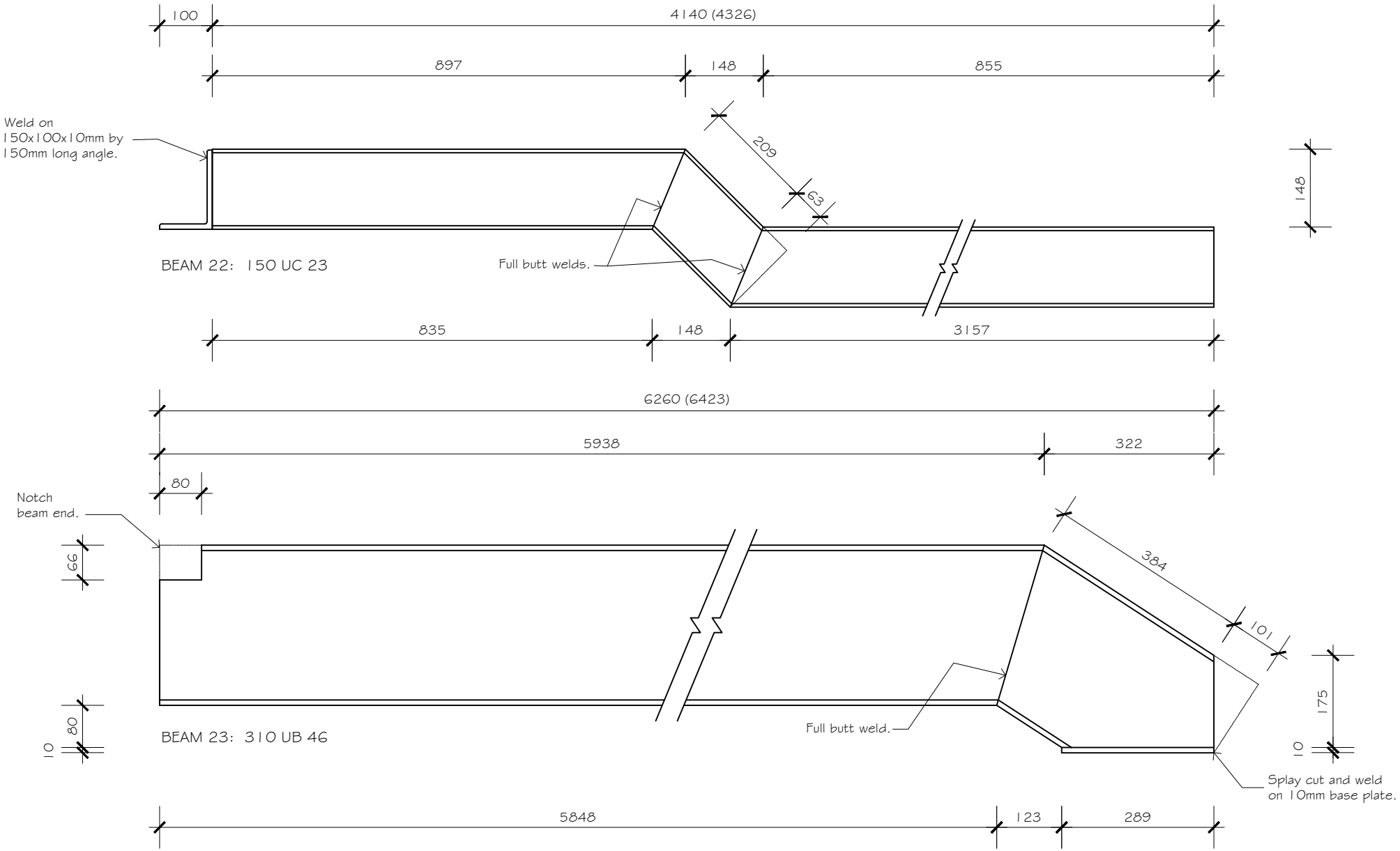

STEELWORK DETAILS 1:10

FOR: MR. A & MRS. P BUTLER	FINAL CONSTRUCTION - 18.09.15	PREPARED - 13.8.15 ap	SHEET: 18 OF 30
AT: 76 HOPETOUN AVE, VAUCLUSE. NSW. 2030.		JOB NO: 7643/15 C	Cape Cod

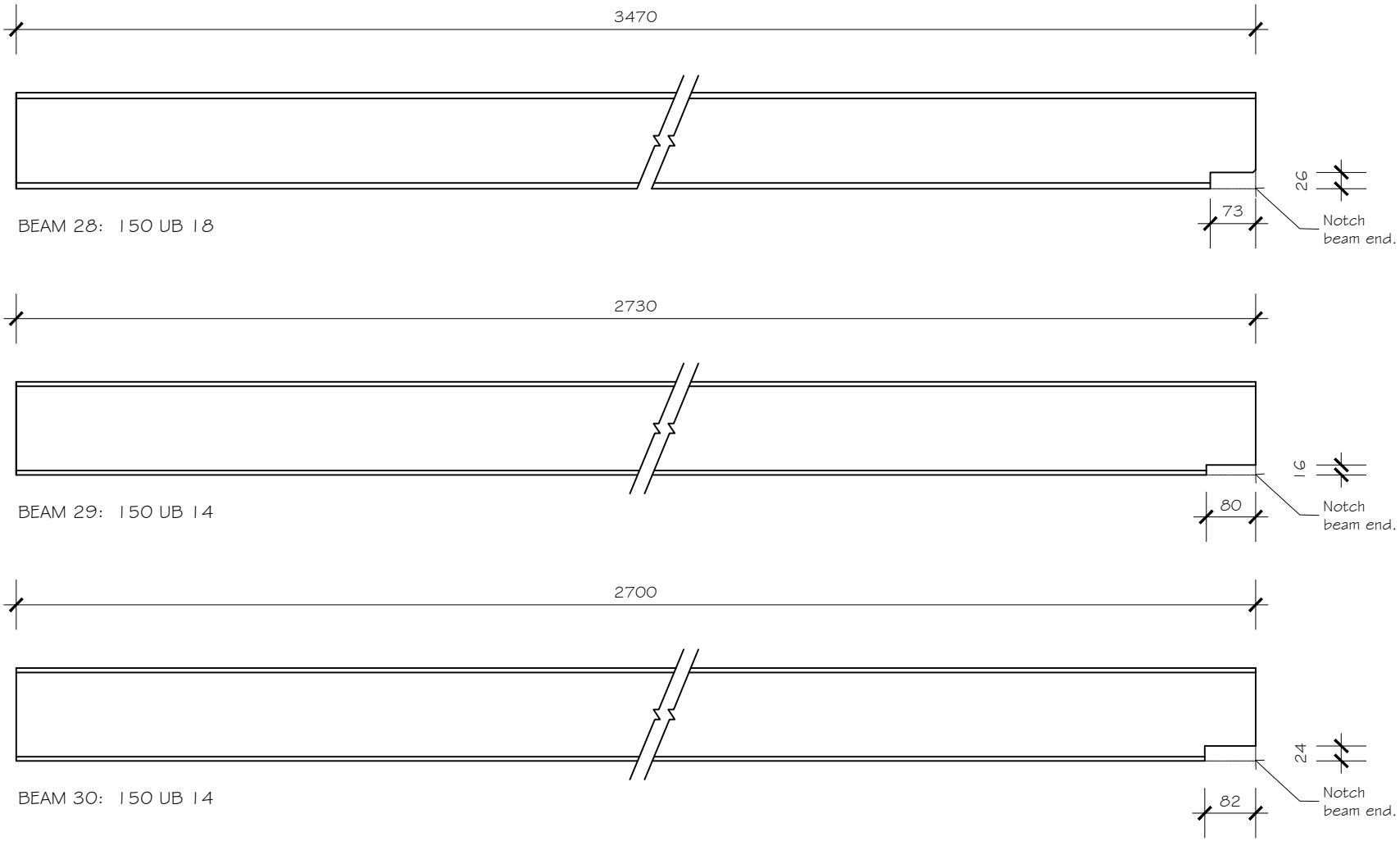

STEELWORK DETAILS 1:10

FOR: MR. A & MRS. P BUTLER	FINAL CONSTRUCTION - 18.09.15	PREPARED - 13.8.15 ap	SHEET: 19 OF 30
AT: 76 HOPETOUN AVE, VAUCLUSE. NSW. 2030.		JOB NO: 7643/15 C	Cape Cod

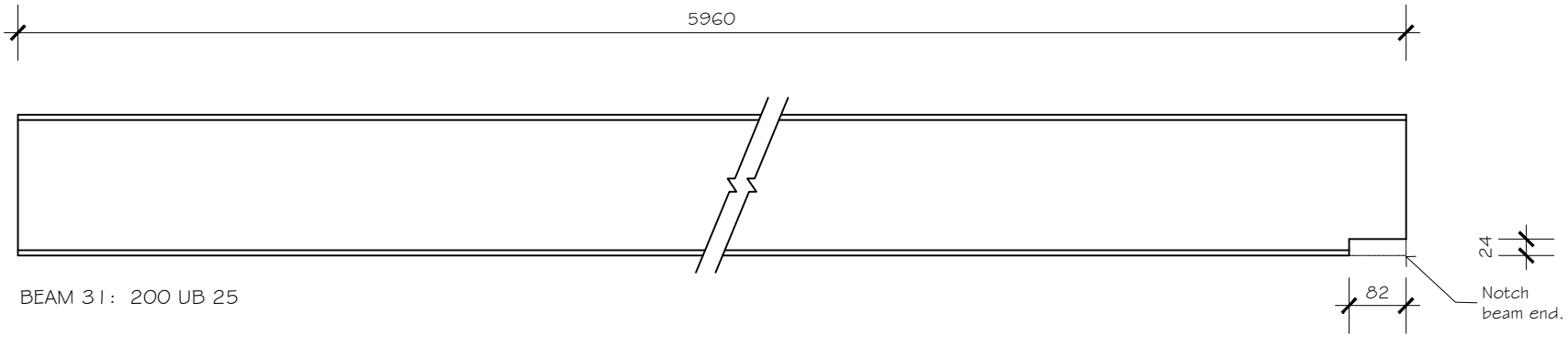

BEAM 31: 200 UB 25

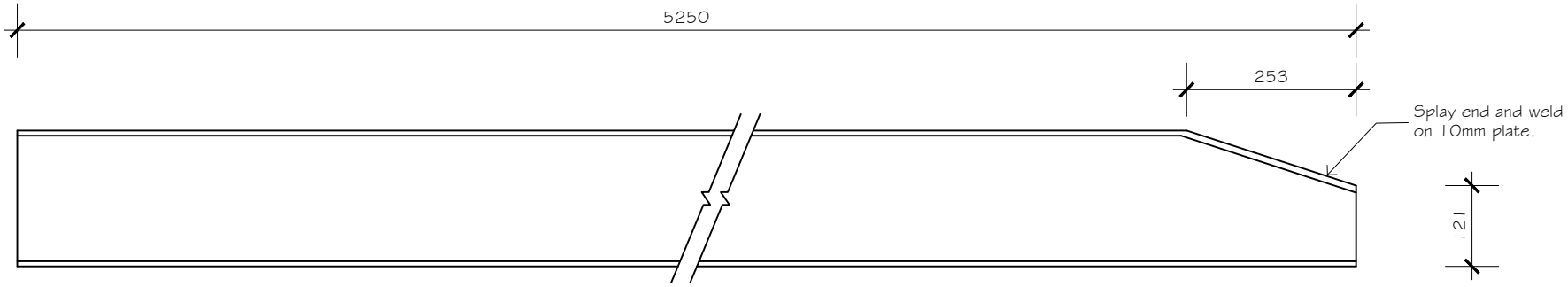

BEAM 33: 200 UB 25

STEELWORK DETAILS 1:10

FOR: MR. A & MRS. P BUTLER	FINAL CONSTRUCTION - 18.09.15	PREPARED - 13.8.15 ap	SHEET: 20 OF 30
AT: 76 HOPETOUN AVE, VAUCLUSE. NSW. 2030.		JOB NO: 7643/15 C	Cape Cod

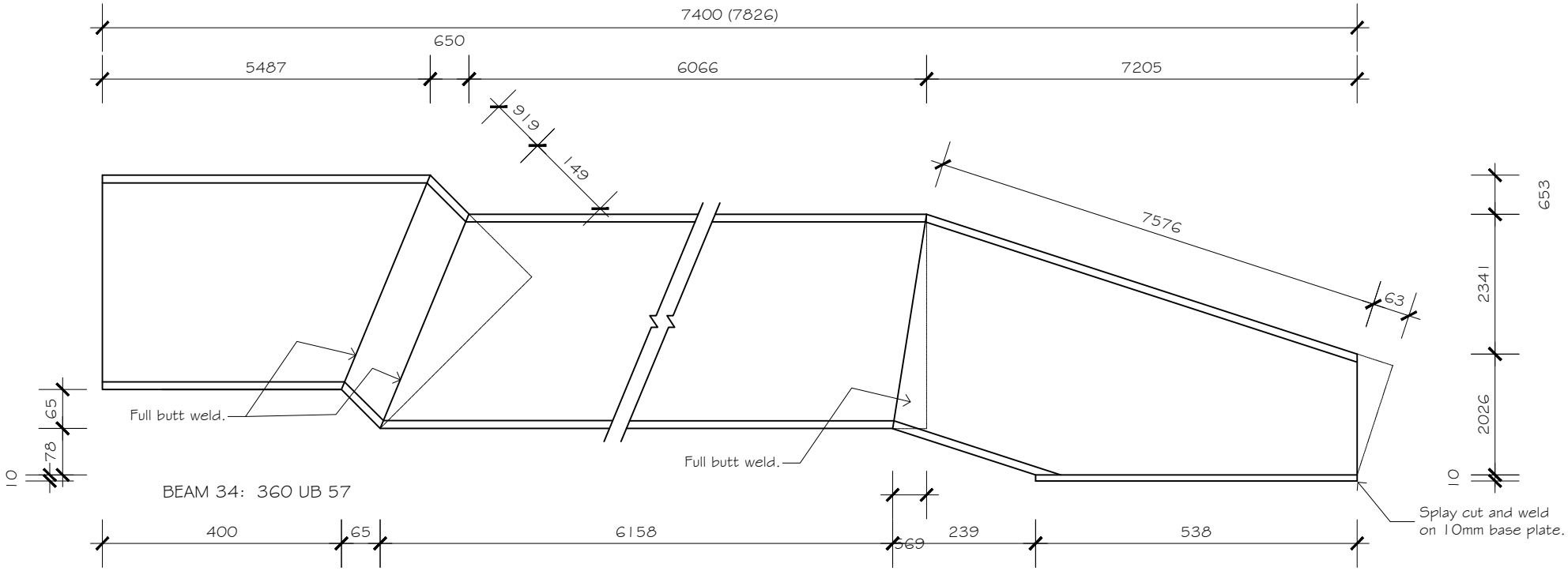

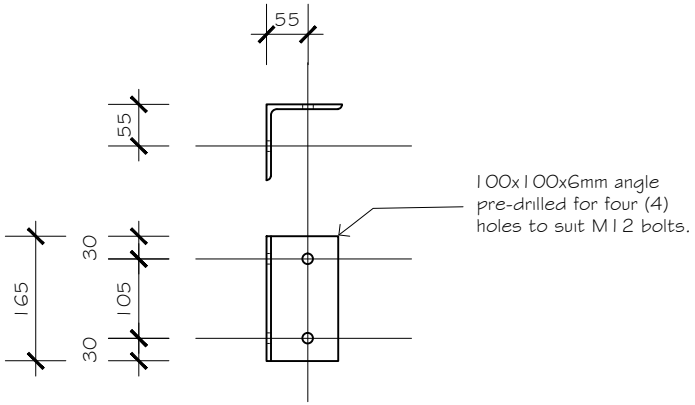

BRACKET

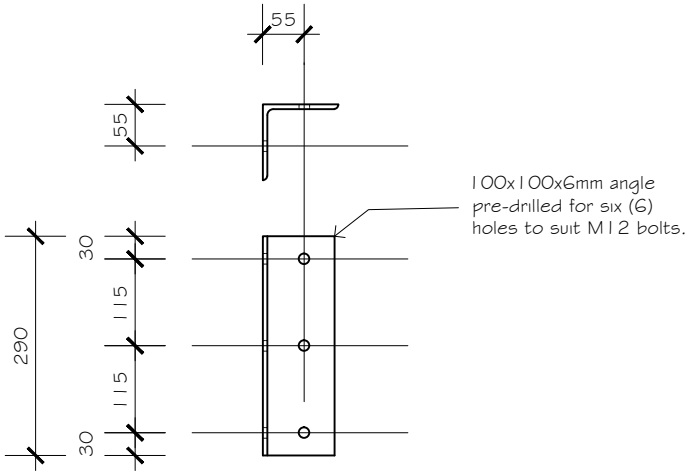

BRACKET

STEELWORK DETAILS 1:10

FOR: MR. A & MRS. P BUTLER	FINAL CONSTRUCTION - 18.09.15	PREPARED - 13.8.15 ap	SHEET: 21 OF 30
AT: 76 HOPETOUN AVE, VAUCLUSE. NSW. 2030.		JOB NO: 7643/15 C	Cape Cod

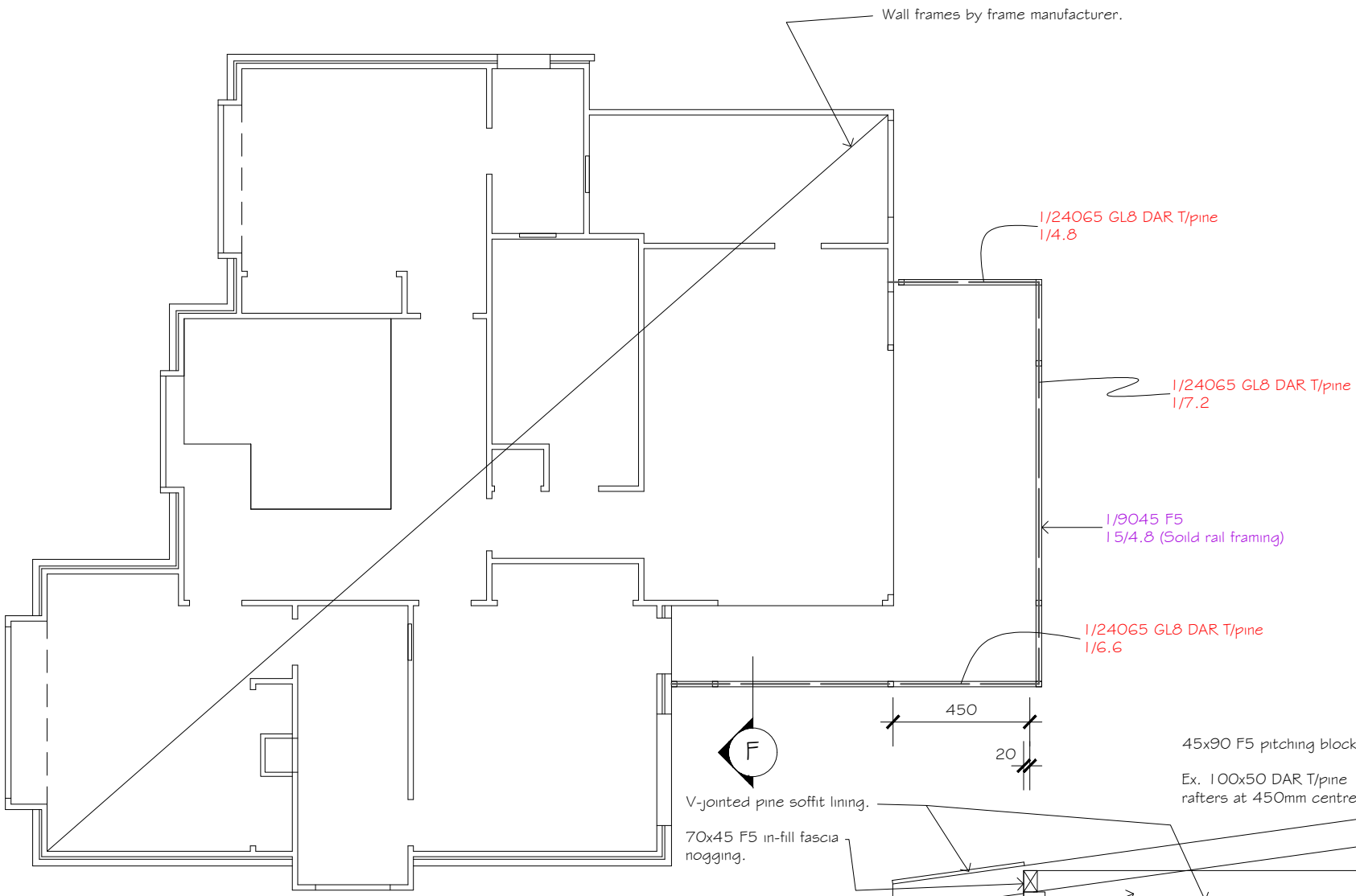

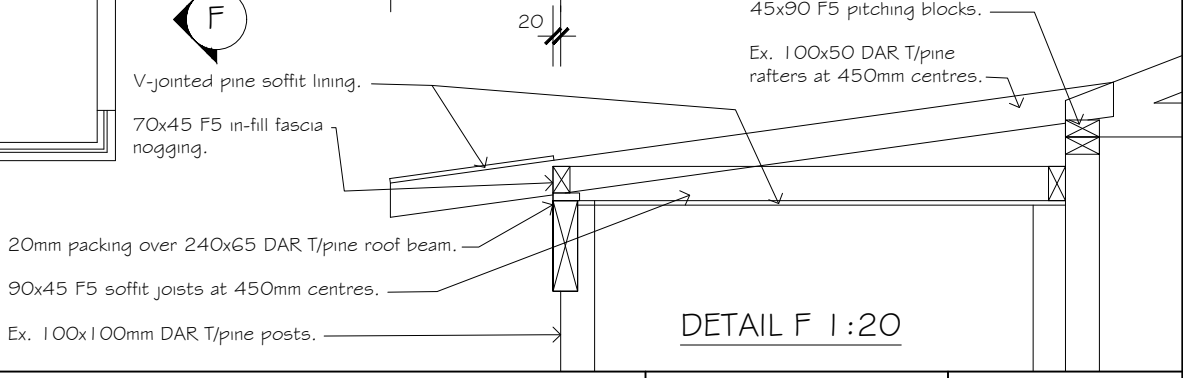

WALL FRAME LAYOUT - First Floor

SCALE 1:100

* 90x45 F5 studs at 450mm centres to solid rail.

DETAIL F 1:20

FOR: MR. A & MRS. P BUTLER	FINAL CONSTRUCTION - 18.09.15	PREPARED - 13.8.15 ap	SHEET: 22 OF 30
AT: 76 HOPETOUN AVE, VAUCLUSE. NSW. 2030.		JOB NO: 7643/15 C	Cape Cod

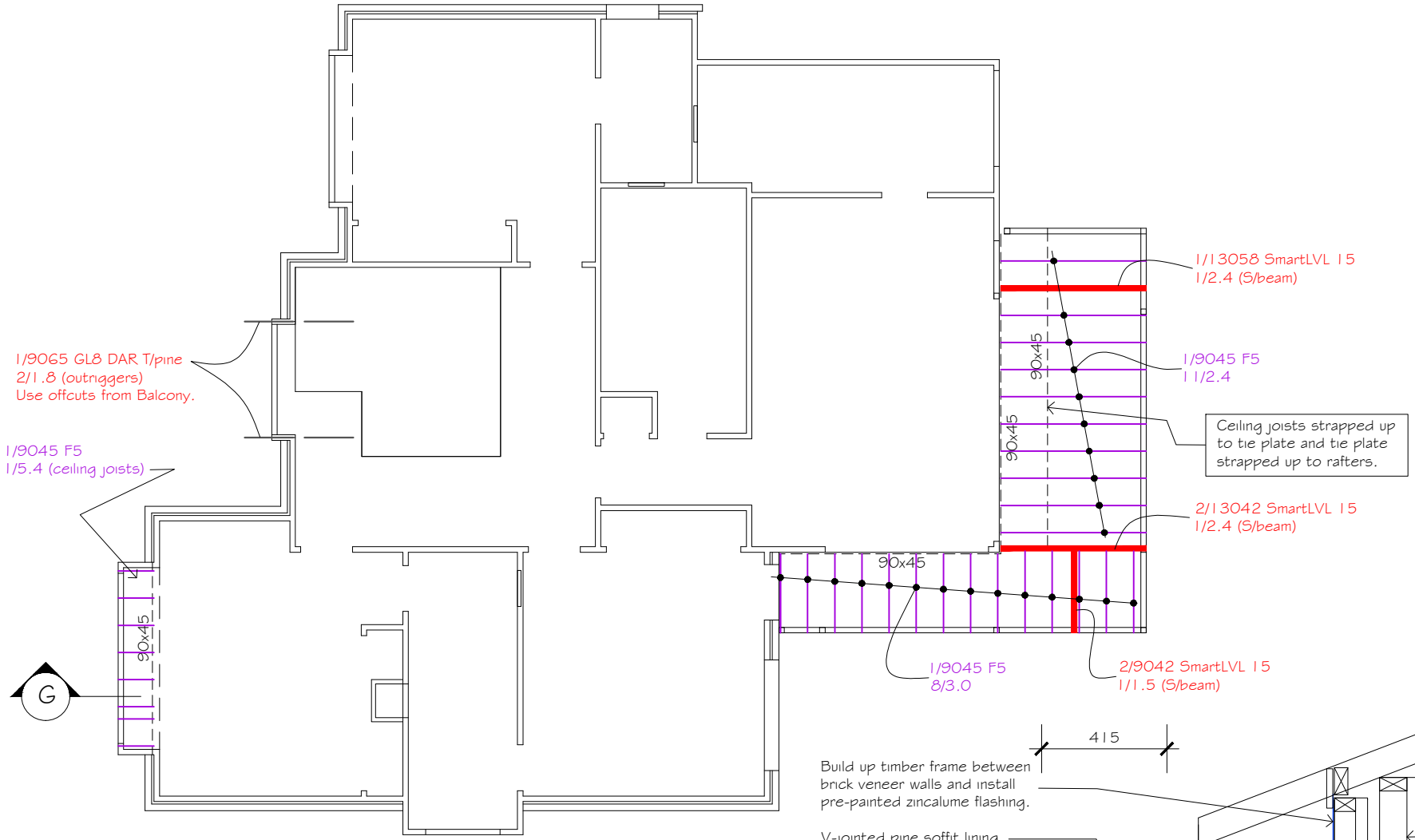

CEILING FRAME LAYOUT - First Floor

SCALE 1:100

* 90x45 F5 joists at 450mm centres.
* LVL - Denotes tilling smart lvl

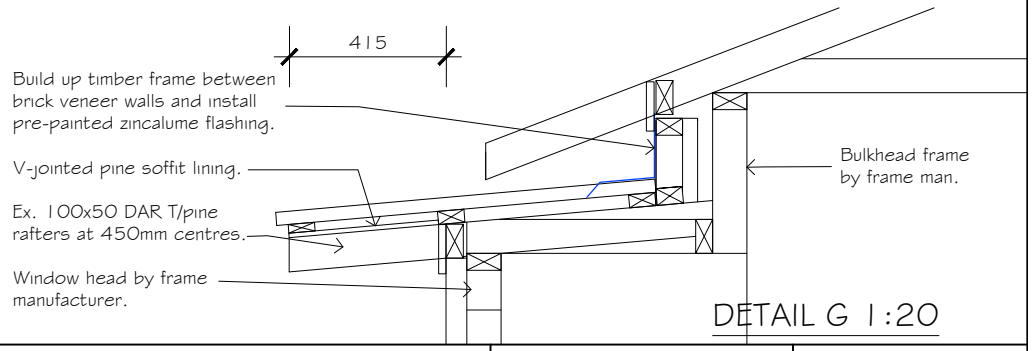

DETAIL G 1:20

FOR: MR. A & MRS. P BUTLER	FINAL CONSTRUCTION - 18.09.15	PREPARED - 13.8.15 ap	SHEET: 23 OF 30
AT: 76 HOPETOUN AVE, VAUCLUSE. NSW. 2030.		JOB NO: 7643/15 C	Cape Cod

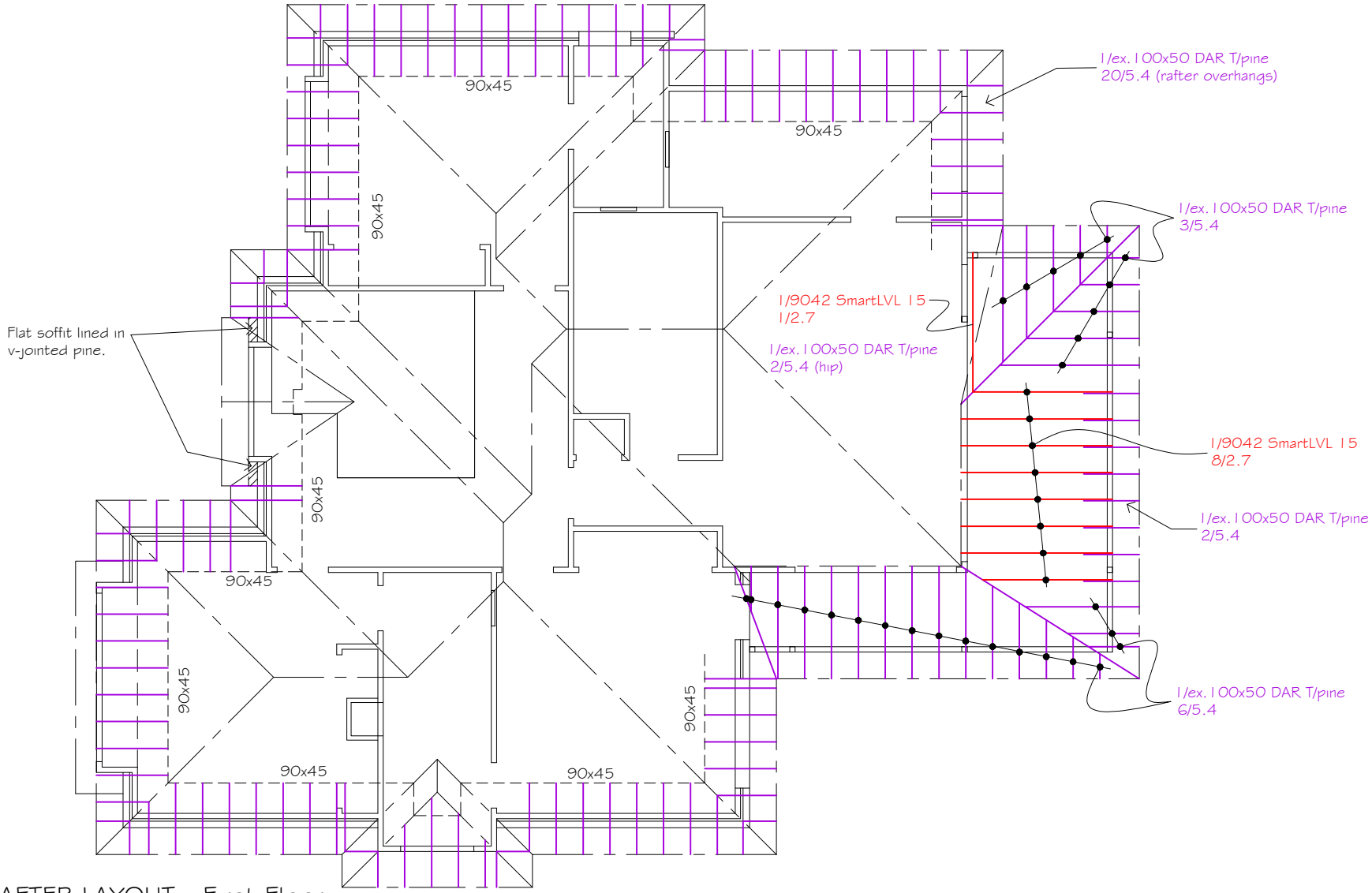

RAFTER LAYOUT - First Floor

SCALE 1:100

* Provide Ex. 100x50 DAR T/pine rafter overhangs at 450mm centres.
* LVL - Denotes tilling smart lvl

FOR: MR. A & MRS. P BUTLER	FINAL CONSTRUCTION - 18.09.15	PREPARED - 13.8.15 ap	SHEET: 24 OF 30
AT: 76 HOPETOUN AVE, VAUCLUSE. NSW. 2030.		JOB NO: 7643/15 C	Cape Cod

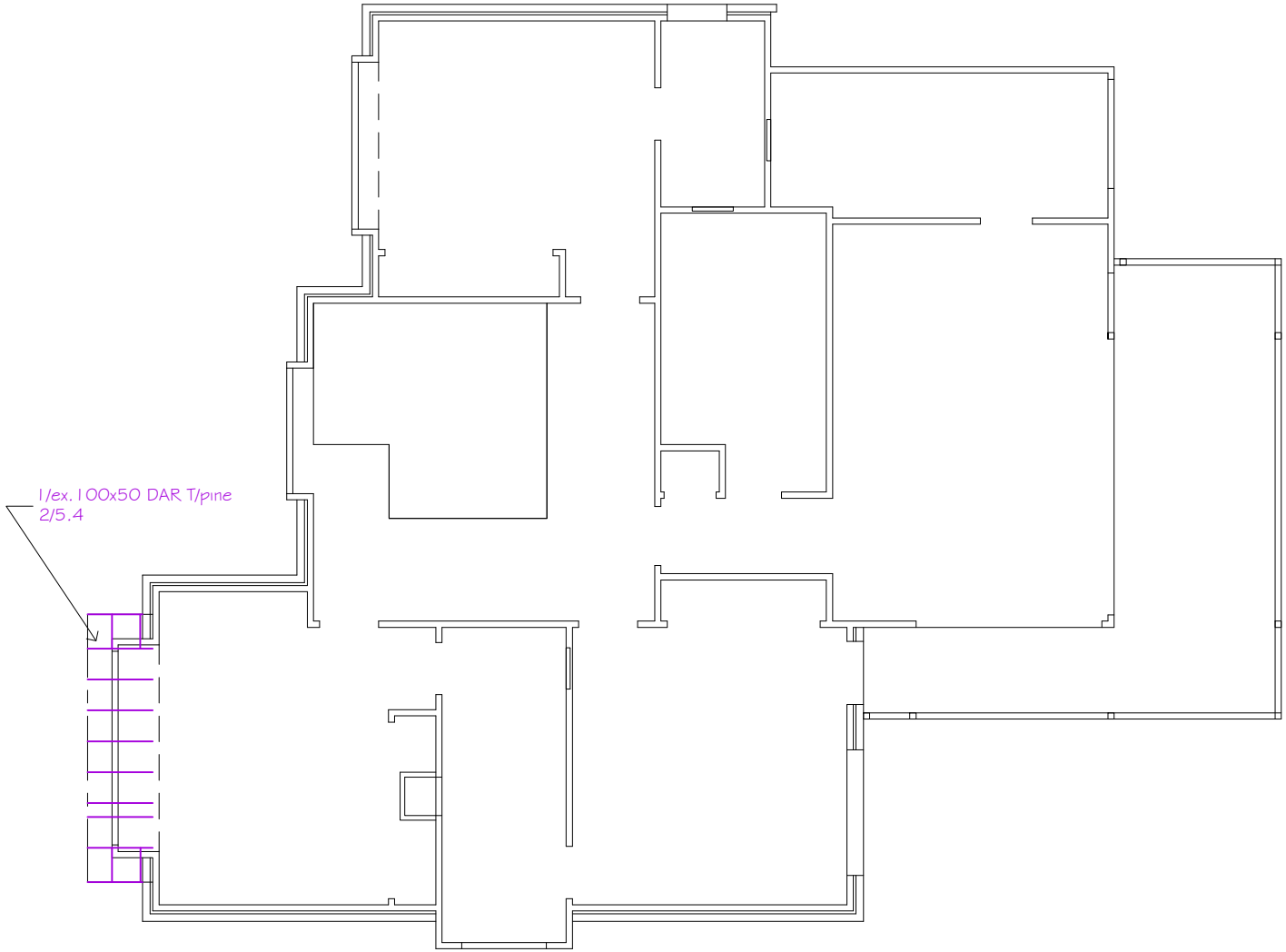

RAFTER LAYOUT - Bedroom 3 Awning

SCALE 1:100

* Ex. 100x50 DAR T/pine rafters at 450mm centres.

FOR: MR. A & MRS. P BUTLER	FINAL CONSTRUCTION - 18.09.15	PREPARED - 13.8.15 ap	SHEET: 25 OF 30
AT: 76 HOPETOUN AVE, VAUCLUSE. NSW. 2030.		JOB NO: 7643/15 C	Cape Cod

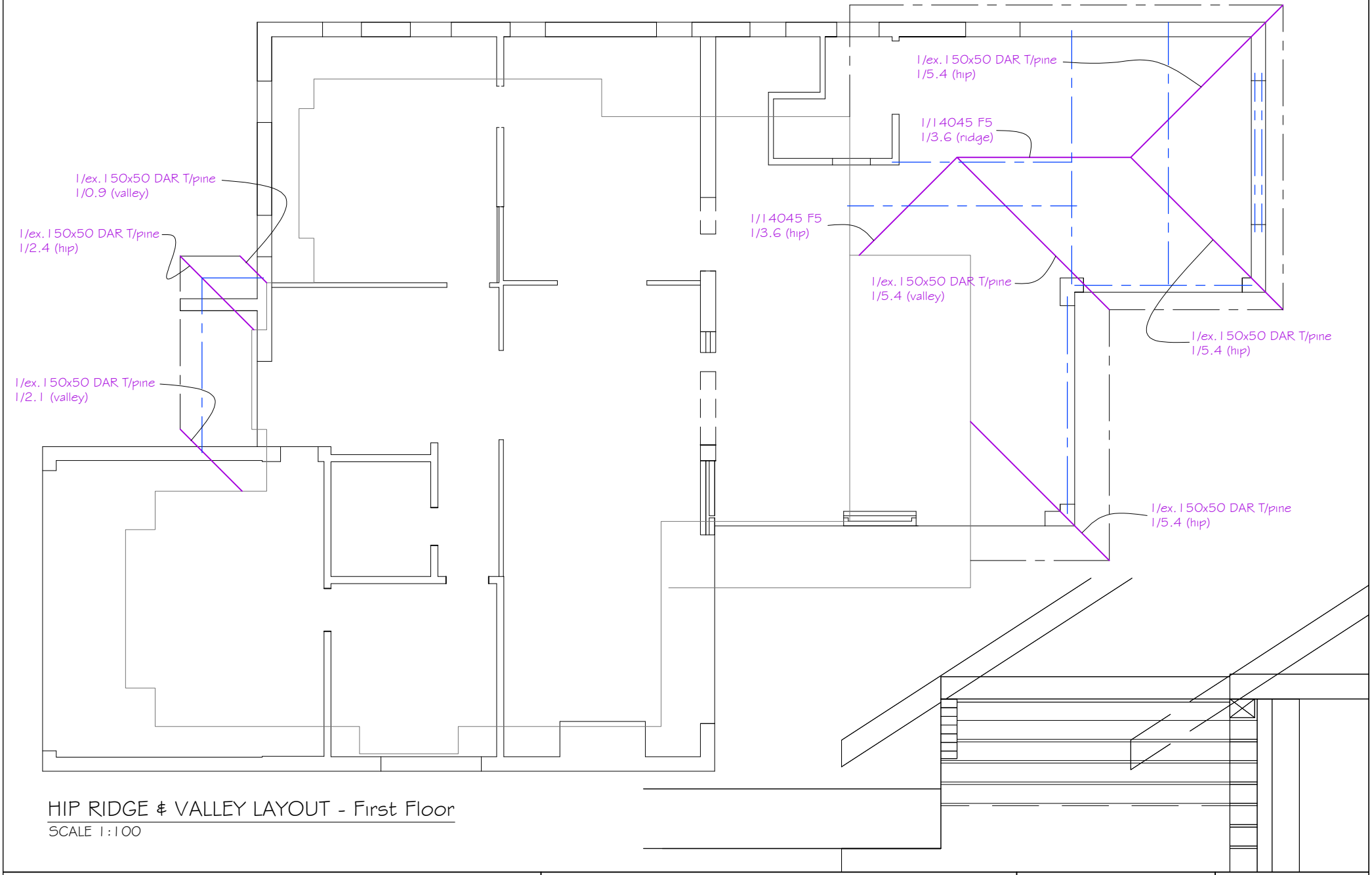

HIP RIDGE & VALLEY LAYOUT - First Floor

SCALE 1:100

FOR: MR. A & MRS. P BUTLER	FINAL CONSTRUCTION - 18.09.15	PREPARED - 13.8.15 ap	SHEET: 26 OF 30
AT: 76 HOPETOUN AVE, VAUCLUSE. NSW. 2030.		JOB NO: 7643/15 C	Cape Cod

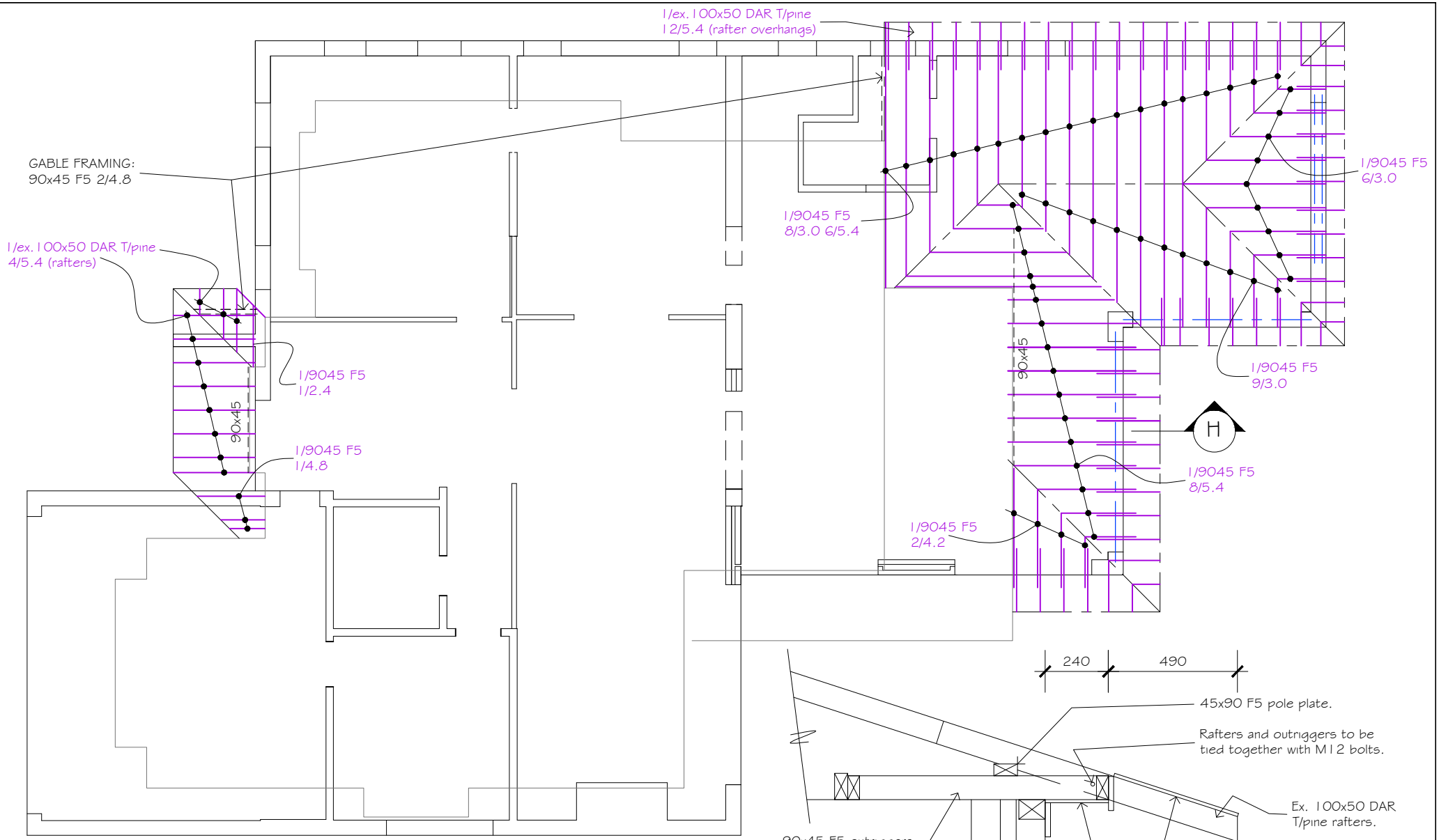

RAFTER LAYOUT - Ground Floor

SCALE 1:100

* Rafters at 450mm centres.

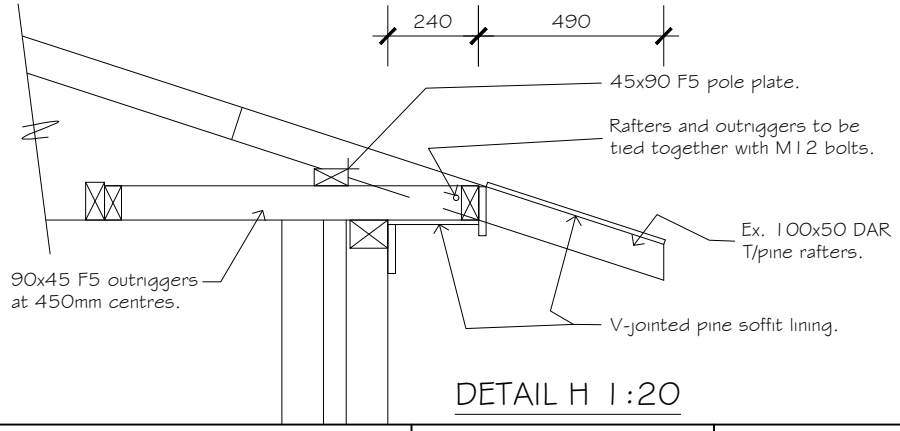

DETAIL H 1:20

FOR: MR. A & MRS. P BUTLER	FINAL CONSTRUCTION - 18.09.15	PREPARED - 13.8.15 ap	SHEET: 27 OF 30
AT: 76 HOPETOUN AVE, VAUCLUSE. NSW. 2030.		JOB NO: 7643/15 C	Cape Cod

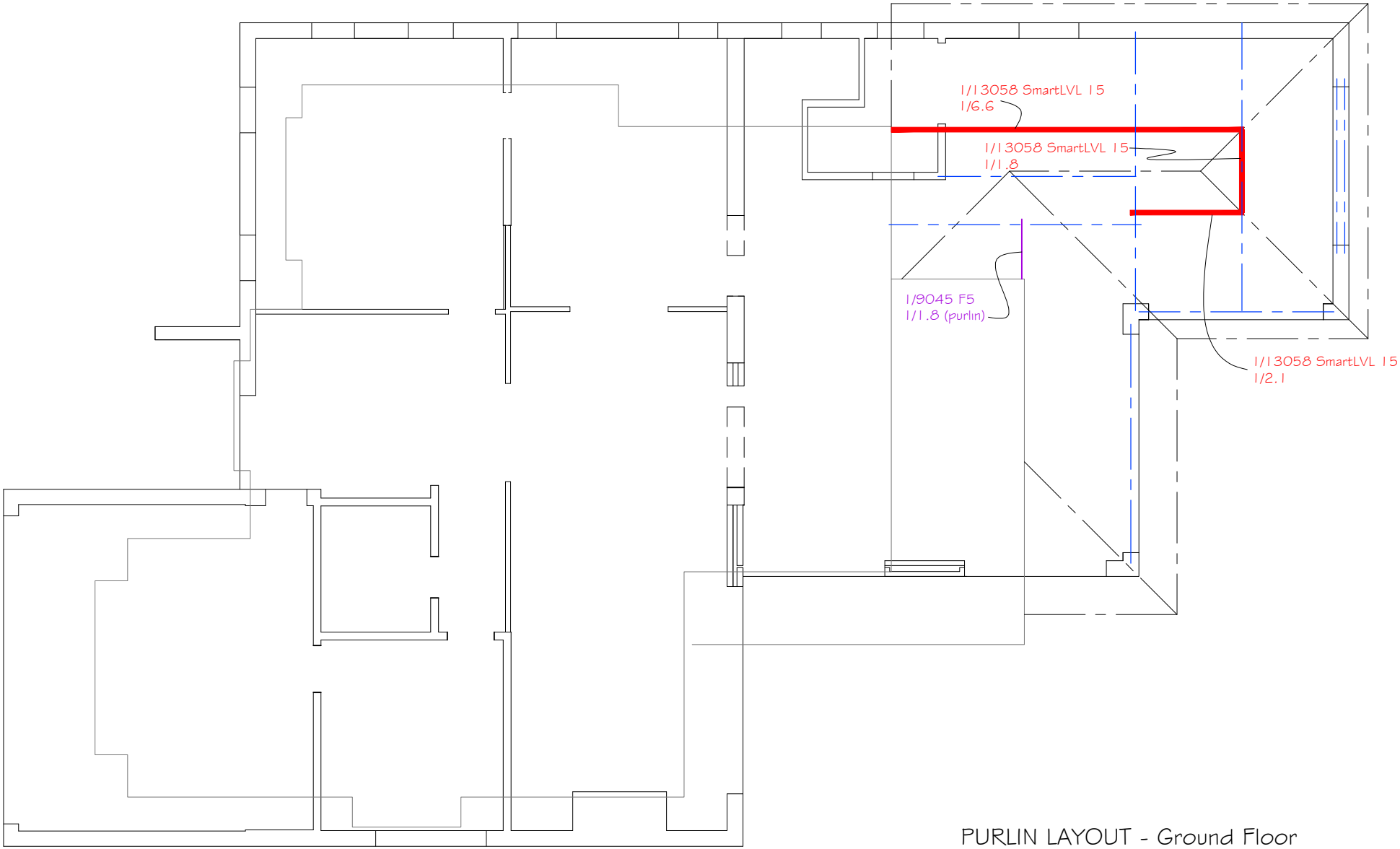

PURLIN LAYOUT - Ground Floor

SCALE 1:100

* Provide 90x45 F5 struts at max. 1900mm centres.
* LVL - Denotes tilling smart lvl

FOR: MR. A & MRS. P BUTLER	FINAL CONSTRUCTION - 18.09.15	PREPARED - 13.8.15 ap	SHEET: 28 OF 30
AT: 76 HOPETOUN AVE, VAUCLUSE. NSW. 2030.		JOB NO: 7643/15 C	Cape Cod

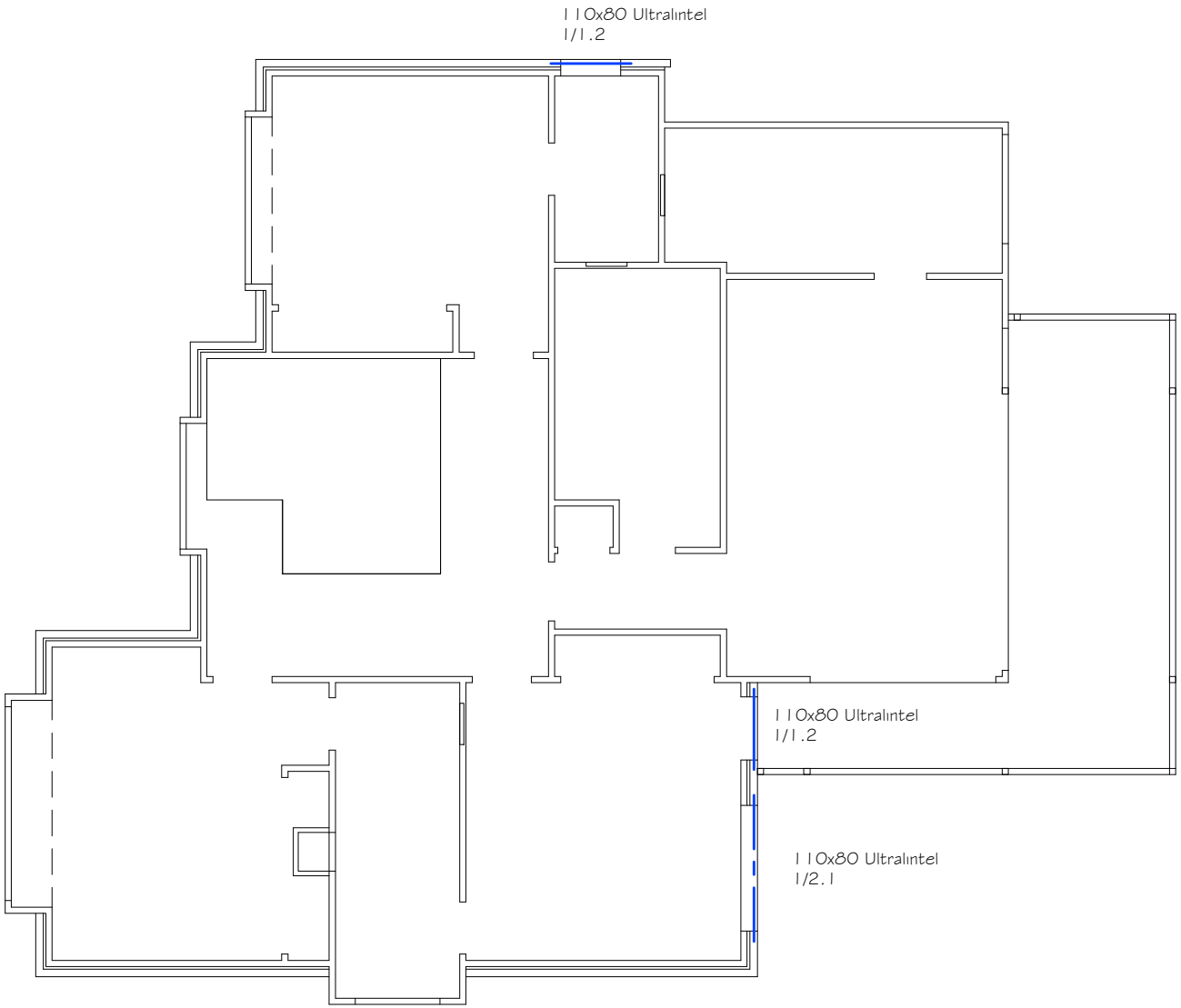

LINTEL LAYOUT - First Floor

SCALE 1:100

FOR: MR. A & MRS. P BUTLER	FINAL CONSTRUCTION - 18.09.15	PREPARED - 13.8.15 ap	SHEET: 29 OF 30
AT: 76 HOPETOUN AVE, VAUCLUSE. NSW. 2030.		JOB NO: 7643/15 C	Cape Cod

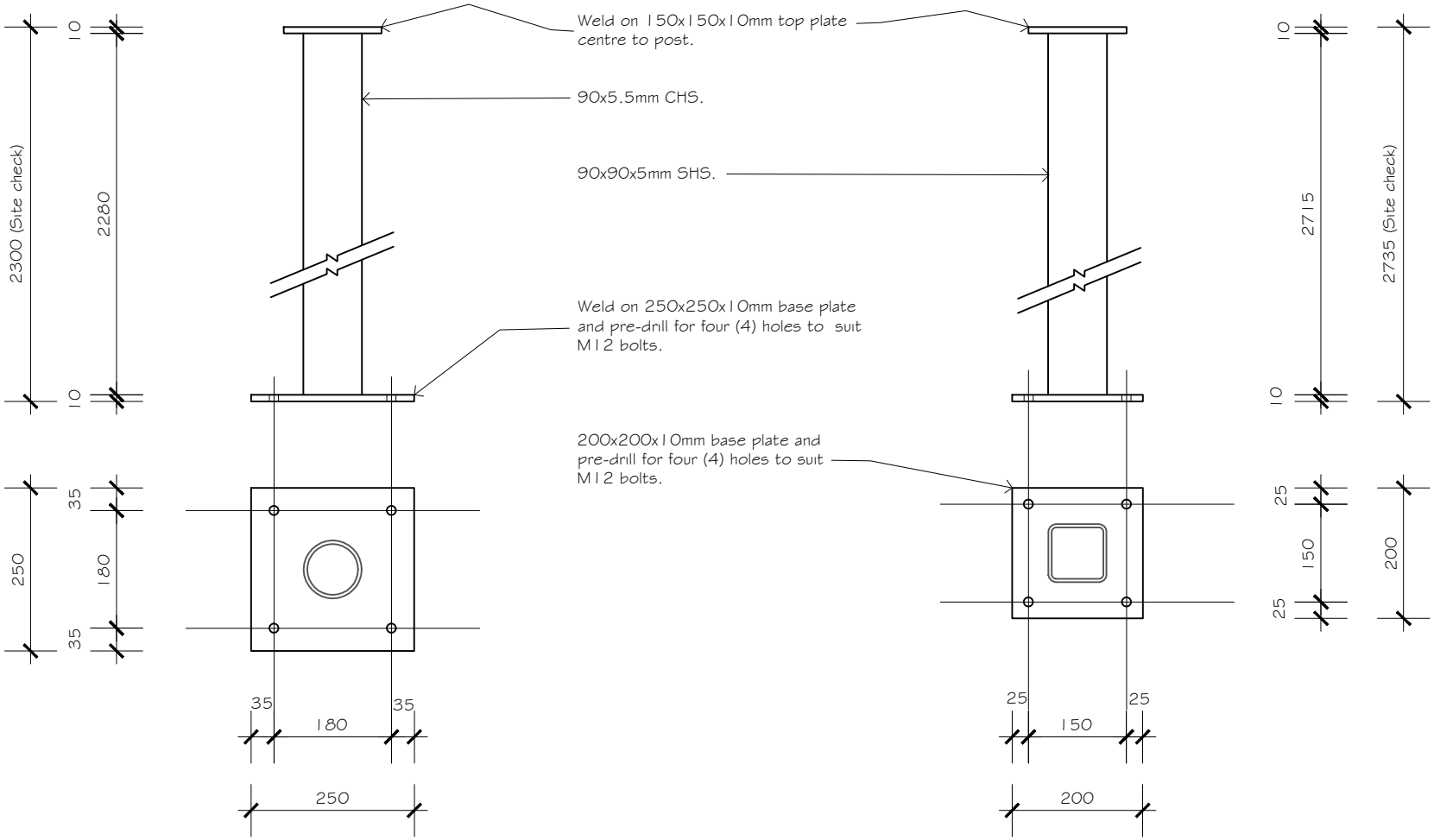

P1 (Galvanised)

P2

STEELWORK DETAILS

SCALE 1:10

FOR: MR. A & MRS. P BUTLER	FINAL CONSTRUCTION - 18.09.15	PREPARED - 13.8.15 ap	SHEET: 30 OF 30
AT: 76 HOPETOUN AVE, VAUCLUSE. NSW. 2030.		JOB NO: 7643/15 C	Cape Cod

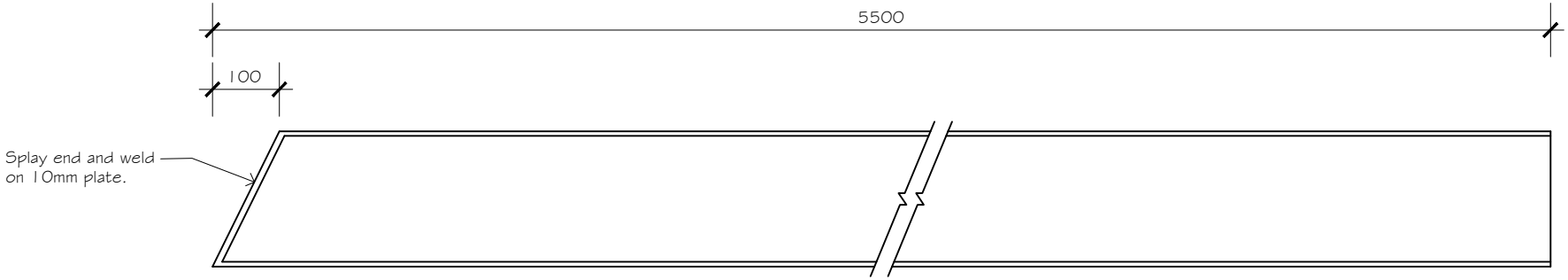

BEAM 5: 200 UB 25

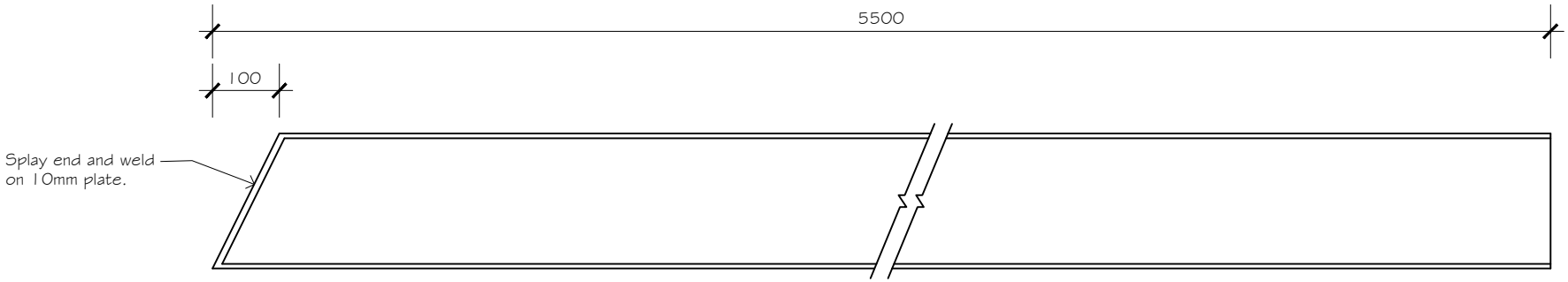

BEAM 7: 200 UB 25

STEELWORK DETAILS 1:10

FOR: MR. A & MRS. P BUTLER	FINAL CONSTRUCTION - 18.09.15	PREPARED - 13.8.15 ap	SHEET: 13 OF 30
AT: 76 HOPETOUN AVE, VAUCLUSE. NSW. 2030.		JOB NO: 7643/15 C	Cape Cod

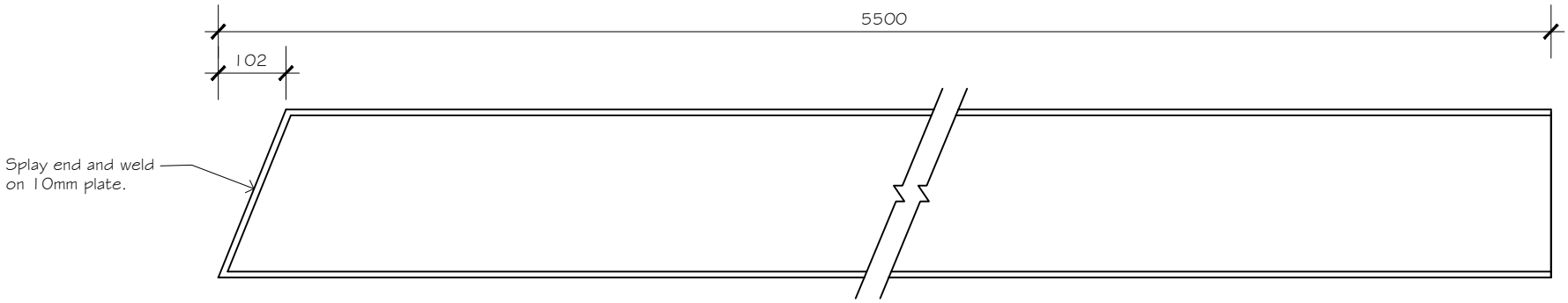

BEAM 8: 250 UB 31

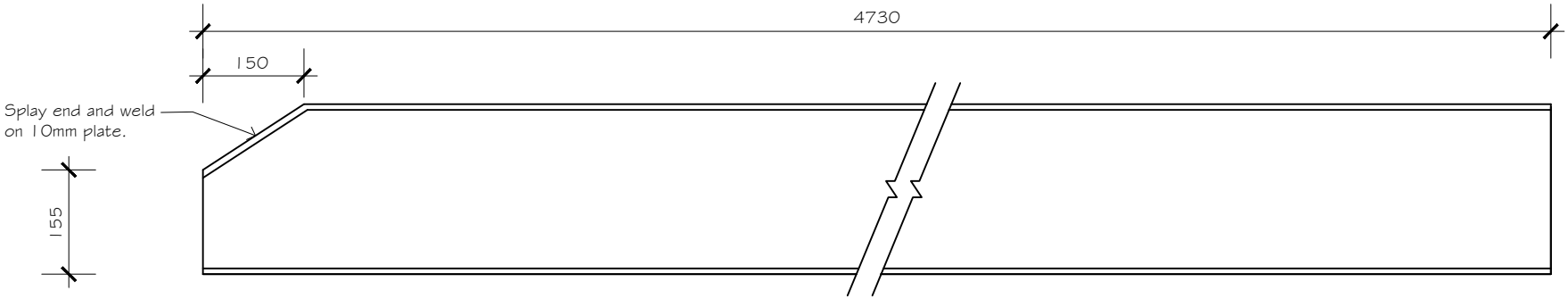

BEAM 9: 250 UB 31

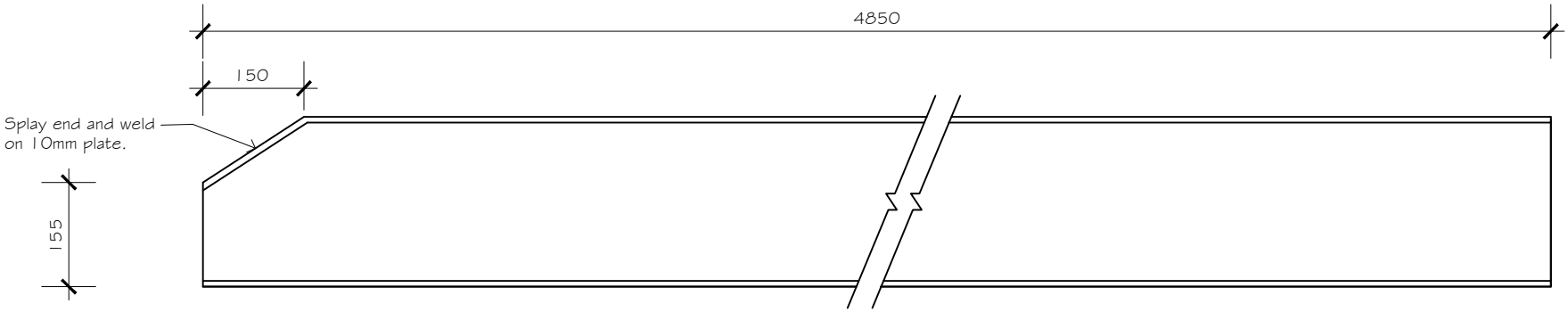

BEAM 10: 250 UB 31

STEELWORK DETAILS 1:10

FOR: MR. A & MRS. P BUTLER	FINAL CONSTRUCTION - 18.09.15	PREPARED - 13.8.15 ap	SHEET: 14 OF 30
AT: 76 HOPETOUN AVE, VAUCLUSE. NSW. 2030.		JOB NO: 7643/15 C	Cape Cod

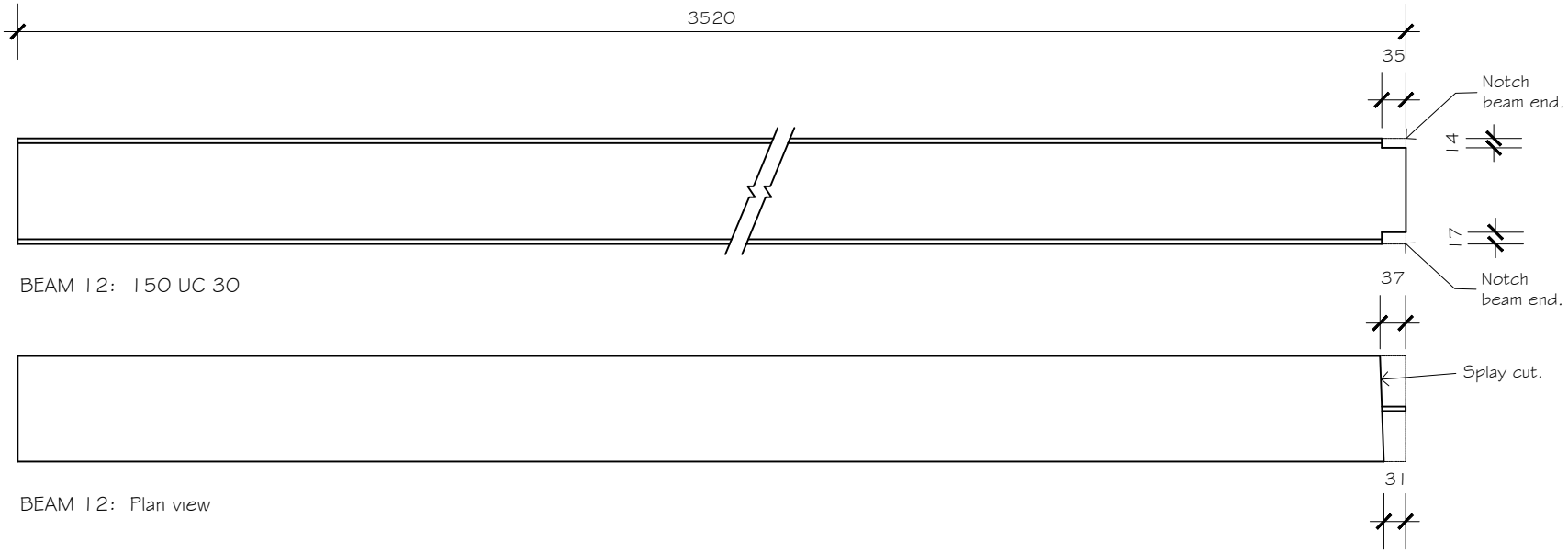

BEAM 12: 150 UC 30

BEAM 12: Plan view

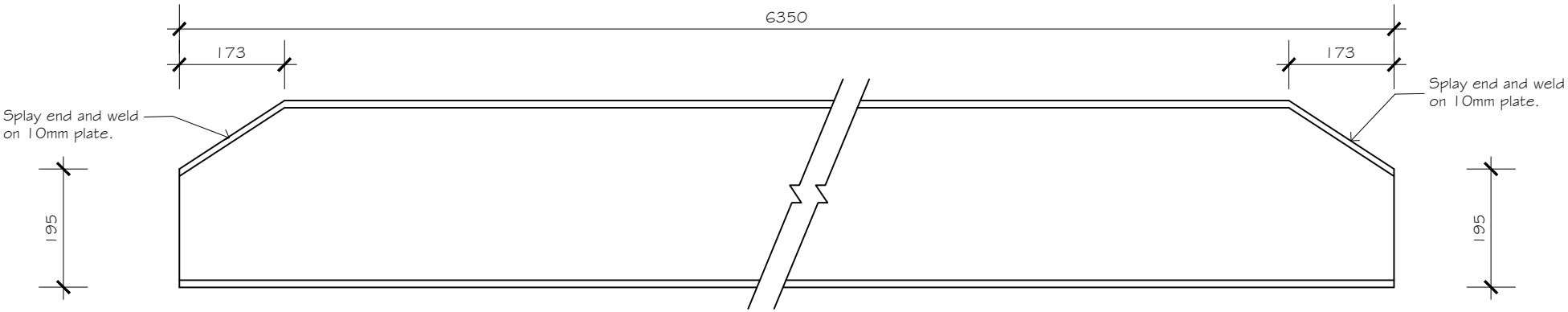

BEAM 13: 310 UB 46

STEELWORK DETAILS 1:10

FOR: MR. A & MRS. P BUTLER	FINAL CONSTRUCTION - 18.09.15	PREPARED - 13.8.15 ap	SHEET: 15 OF 30
AT: 76 HOPETOUN AVE, VAUCLUSE. NSW. 2030.		JOB NO: 7643/15 C	Cape Cod

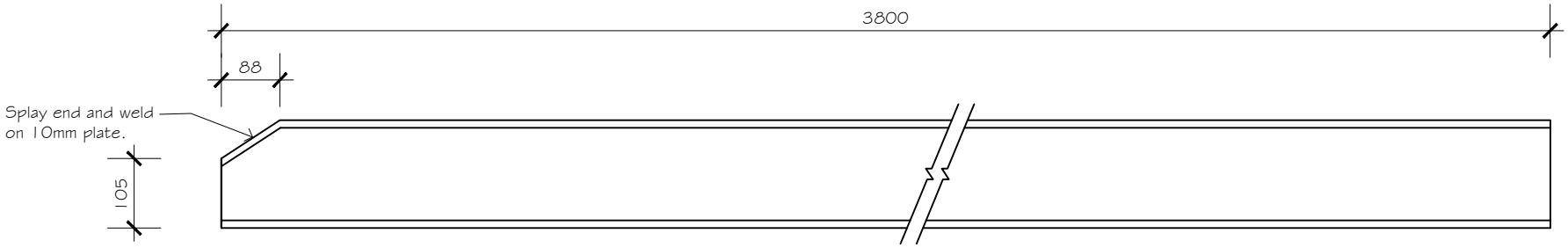

BEAM 14: 150 UC 37

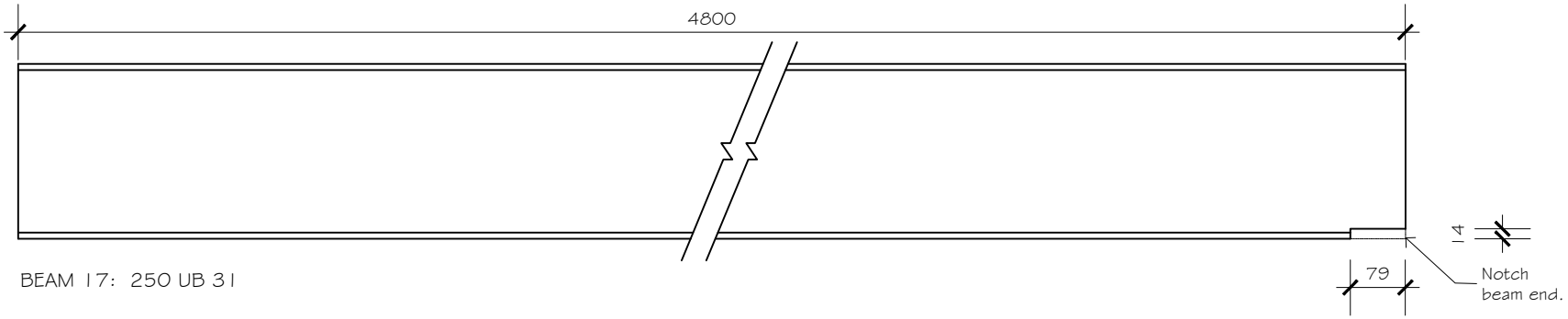

BEAM 17: 250 UB 31

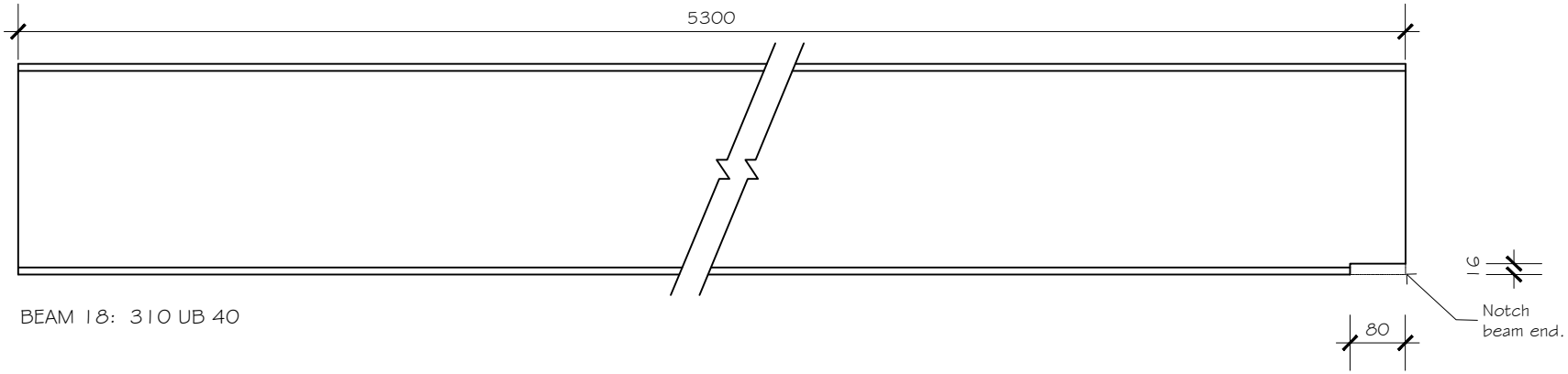

BEAM 18: 310 UB 40

STEELWORK DETAILS 1:10

FOR: MR. A & MRS. P BUTLER	FINAL CONSTRUCTION - 18.09.15	PREPARED - 13.8.15 ap	SHEET: 16 OF 30
AT: 76 HOPETOUN AVE, VAUCLUSE. NSW. 2030.		JOB NO: 7643/15 C	Cape Cod

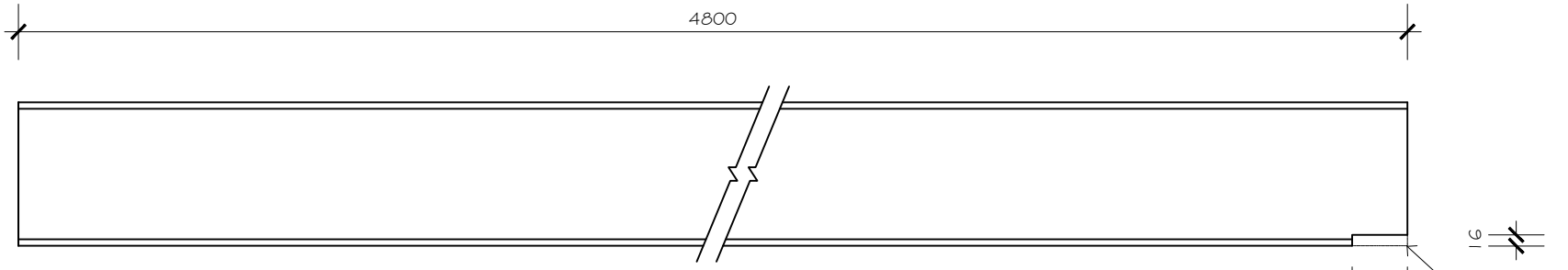

BEAM 20: 200 UB 30

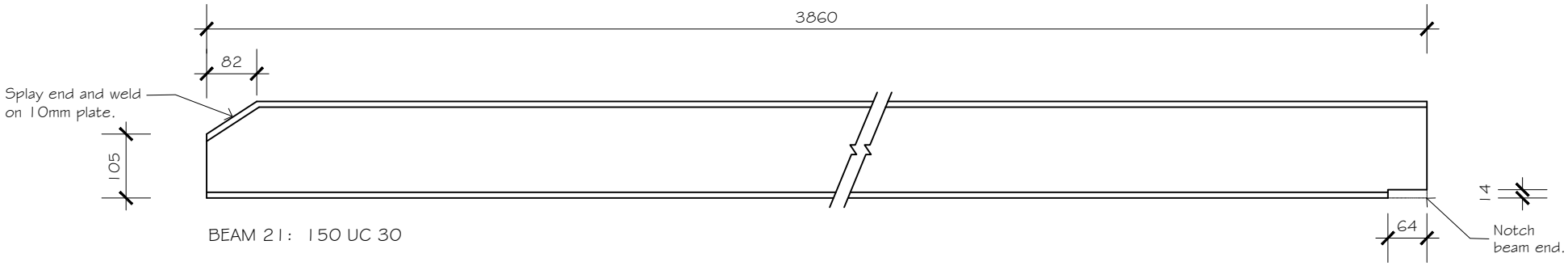

BEAM 21: 150 UC 30

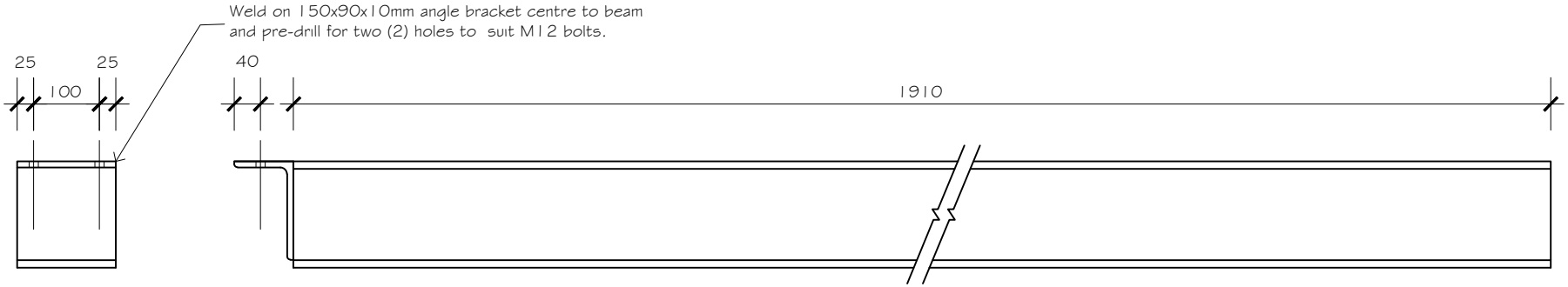

BEAM 35: 150 UC 37

STEELWORK DETAILS 1:10

FOR: MR. A & MRS. P BUTLER	FINAL CONSTRUCTION - 18.09.15	PREPARED - 13.8.15 ap	SHEET: 17 OF 30
AT: 76 HOPETOUN AVE, VAUCLUSE. NSW. 2030.		JOB NO: 7643/15 C	Cape Cod

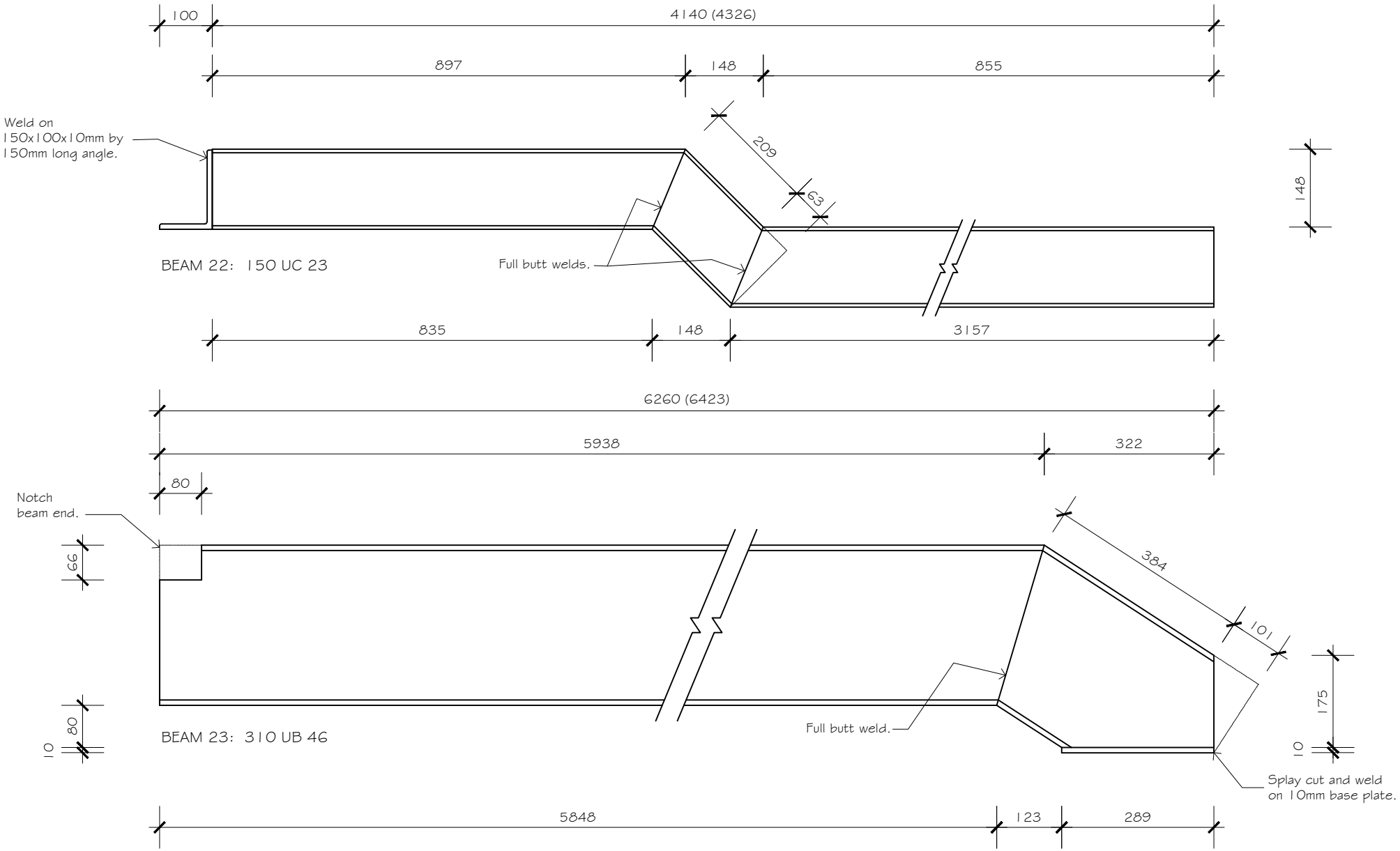

STEELWORK DETAILS 1:10

FOR: MR. A & MRS. P BUTLER	FINAL CONSTRUCTION - 18.09.15	PREPARED - 13.8.15 ap	SHEET: 18 OF 30
AT: 76 HOPETOUN AVE, VAUCLUSE. NSW. 2030.		JOB NO: 7643/15 C	Cape Cod

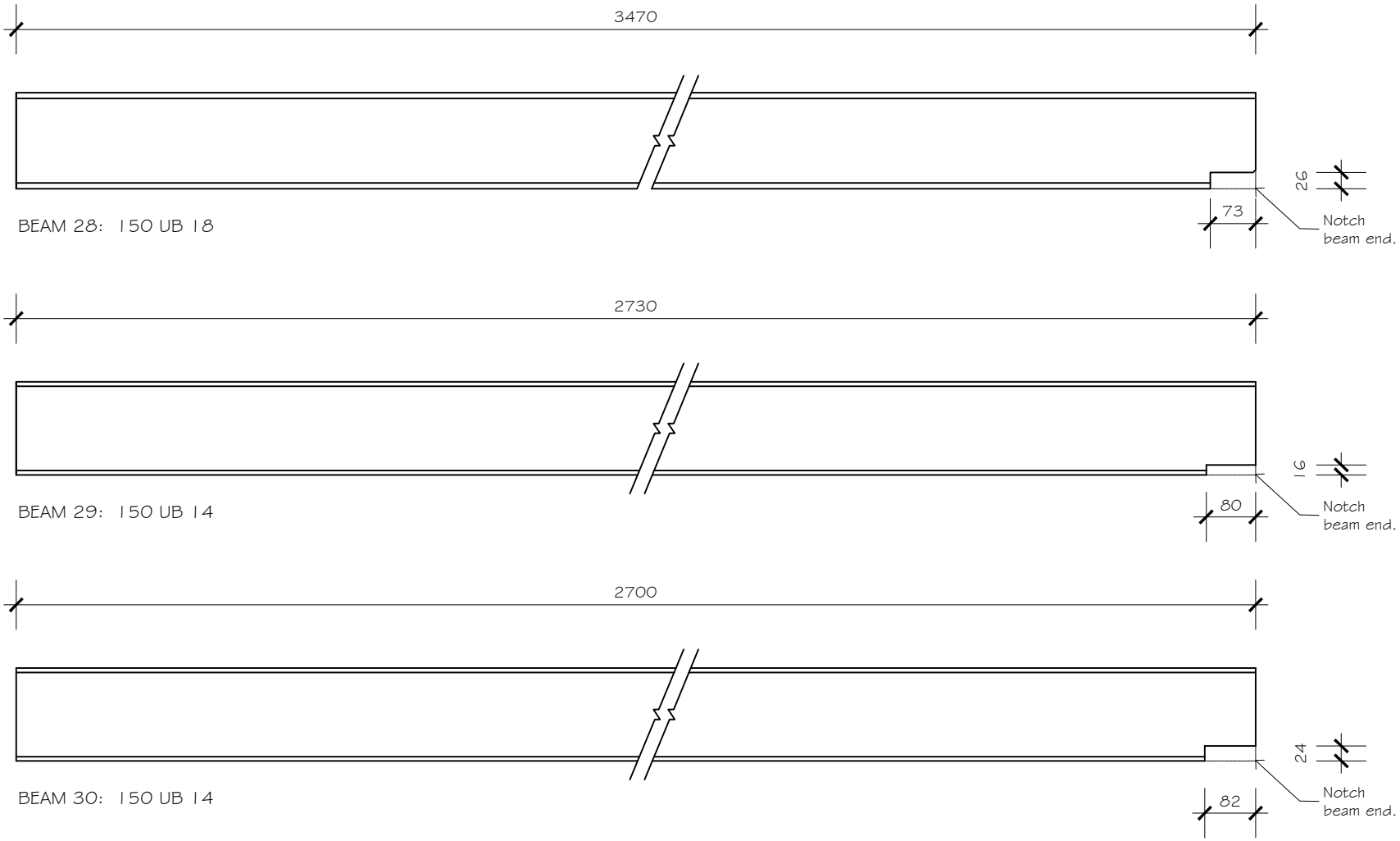

STEELWORK DETAILS 1:10

FOR: MR. A & MRS. P BUTLER	FINAL CONSTRUCTION - 18.09.15	PREPARED - 13.8.15 ap	SHEET: 19 OF 30
AT: 76 HOPETOUN AVE, VAUCLUSE. NSW. 2030.		JOB NO: 7643/15 C	Cape Cod

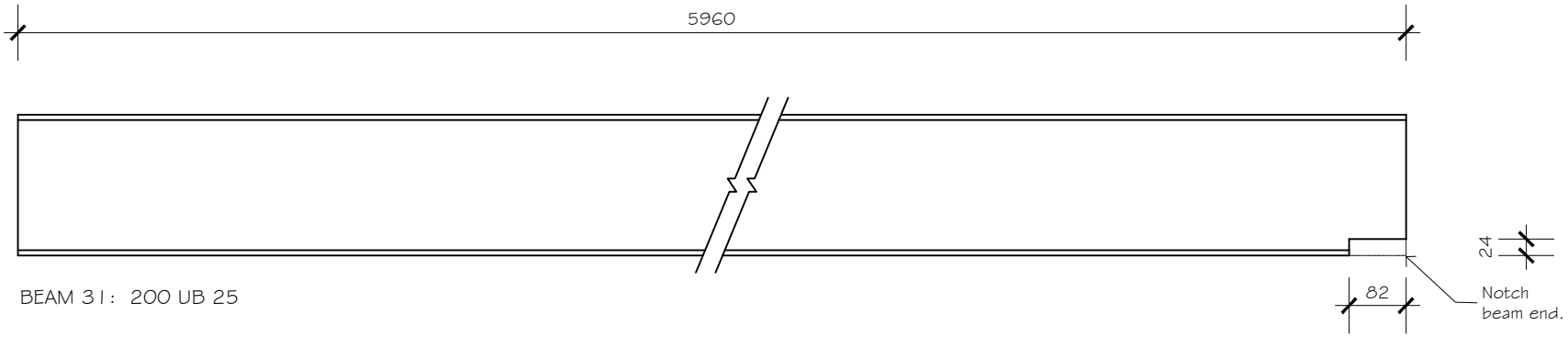

BEAM 31: 200 UB 25

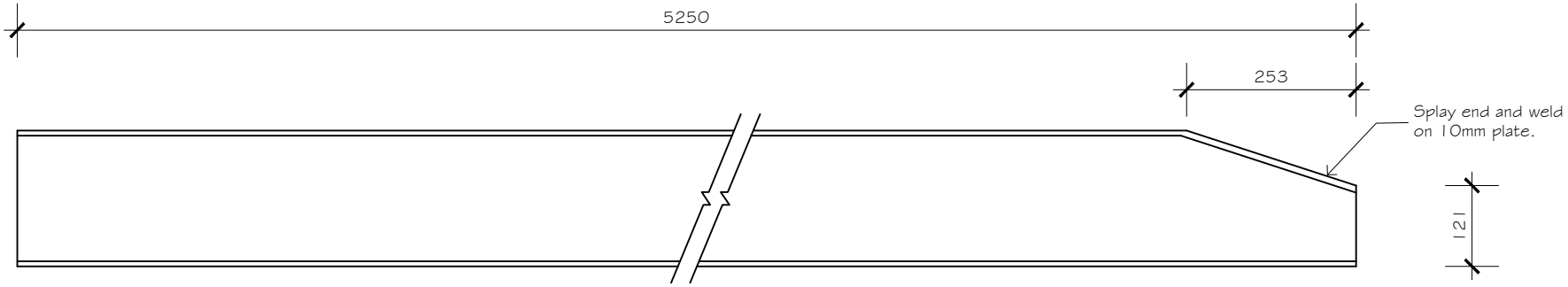

BEAM 33: 200 UB 25

STEELWORK DETAILS 1:10

FOR: MR. A & MRS. P BUTLER	FINAL CONSTRUCTION - 18.09.15	PREPARED - 13.8.15 ap	SHEET: 20 OF 30
AT: 76 HOPETOUN AVE, VAUCLUSE. NSW. 2030.		JOB NO: 7643/15 C	Cape Cod

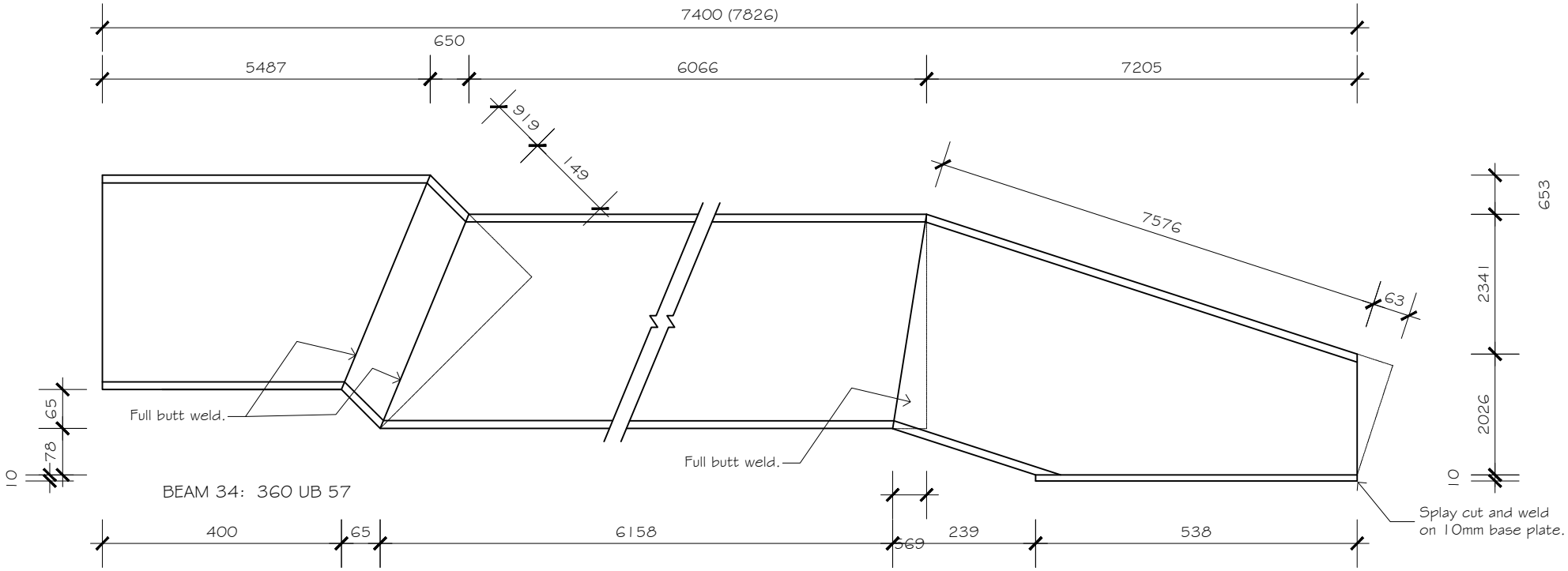

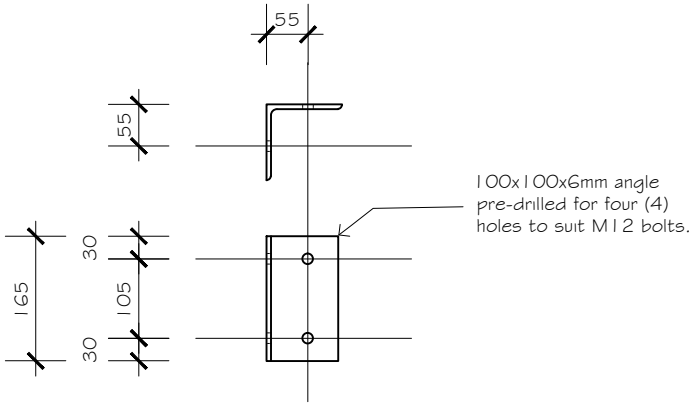

BRACKET

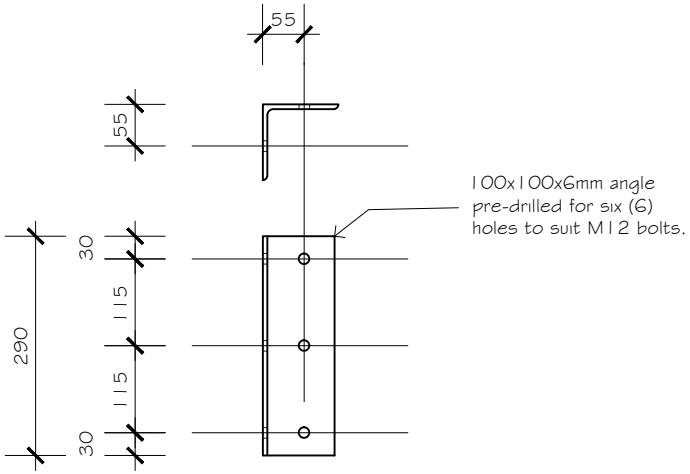

BRACKET

STEELWORK DETAILS 1:10

FOR: MR. A & MRS. P BUTLER	FINAL CONSTRUCTION - 18.09.15	PREPARED - 13.8.15 ap	SHEET: 21 OF 30
AT: 76 HOPETOUN AVE, VAUCLUSE. NSW. 2030.		JOB NO: 7643/15 C	Cape Cod

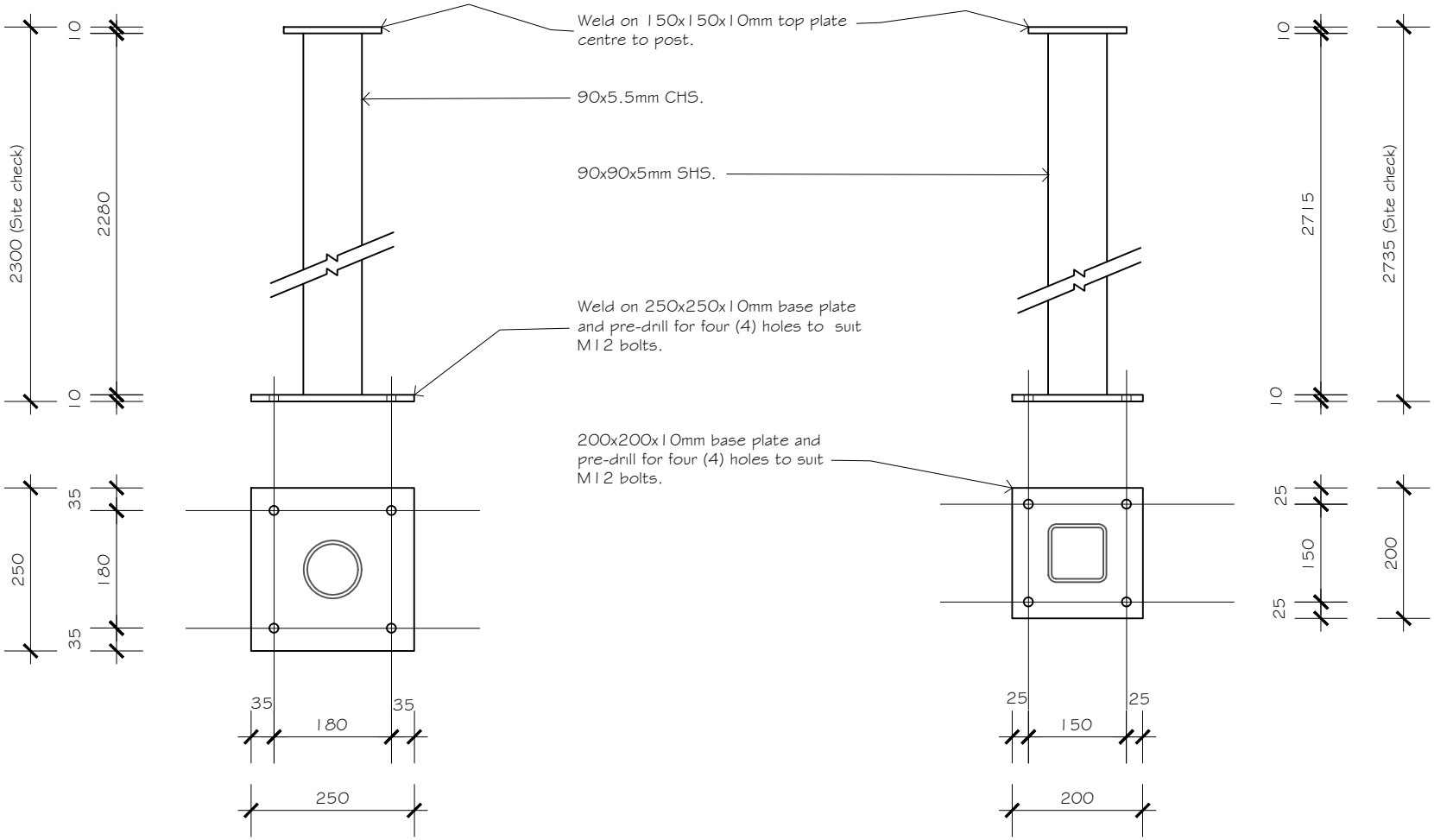

P1 (Galvanised)

P2

STEELWORK DETAILS

SCALE 1:10

FOR: MR. A & MRS. P BUTLER	FINAL CONSTRUCTION - 18.09.15	PREPARED - 13.8.15 ap	SHEET: 30 OF 30
AT: 76 HOPETOUN AVE, VAUCLUSE. NSW. 2030.		JOB NO: 7643/15 C	Cape Cod

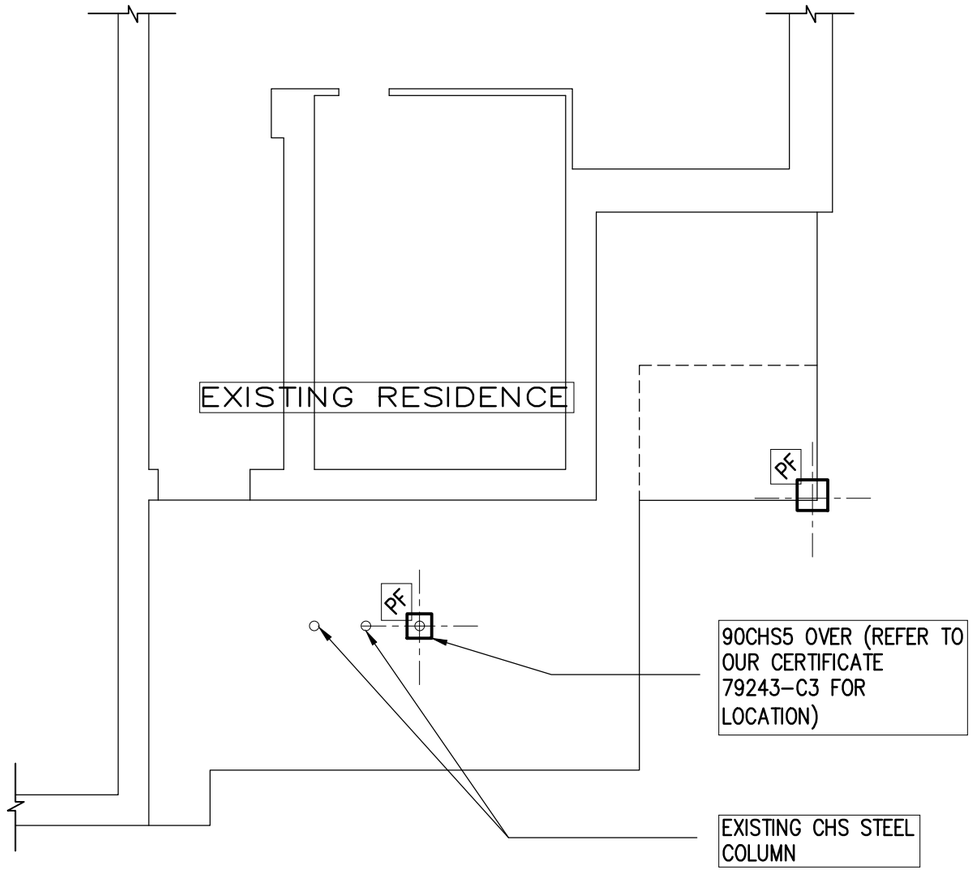

GROUND FLOOR PLAN - PAD FTGS

SCALE 1:100

PF – DENOTES 500sq MIN. x 500 DEEP PAD FOOTING TO BEAR UNIFORMLY ON ROCK WITH A SAFE BEARING CAPACITY OF AT LEAST 600 KPa.

THIS FOOTING DESIGN TAKES INTO ACCOUNT THE RECOMMENDATIONS OF A.S.2870 IN RESPECT OF CLASS A (ROCK-NON REACTIVE) SITE CONDITIONS AS WELL AS THE CHARACTERISTICS OBSERVED DURING OUR INSPECTION ON 02-03-15 NO GEOTECHNICAL TESTING HAS BEEN CARRIED OUT.

NOTES:

1. THIS DRAWING TO BE READ IN CONJUNCTION WITH THE ARCHITECTURAL DRAWING AND SPECIFICATION.
2. ALL CONCRETE AND WORKMANSHIP TO BE IN ACCORDANCE WITH A.S.3600 ASSOCIATED AUSTRALIAN STANDARDS AND THE FOLLOWING TABLE:

ELEMENT	SLUMP	MAX. AGG. SIZE	GRADE
PIERS	100mm	20mm	N20

3. ALL CONCRETE TO BE COMPACTED BY A MECHANICAL VIBRATOR. THE VIBRATOR SHALL NOT BE USED TO SPREAD THE CONCRETE
4. CURE CONCRETE BY KEEPING CONSTANTLY DAMP FOR AT LEAST 5 DAYS AFTER PLACING
5. TERMITE PROTECTION TO BE IN ACCORDANCE WITH A.S. 3660.1-1995 AND COUNCIL'S REQUIREMENTS

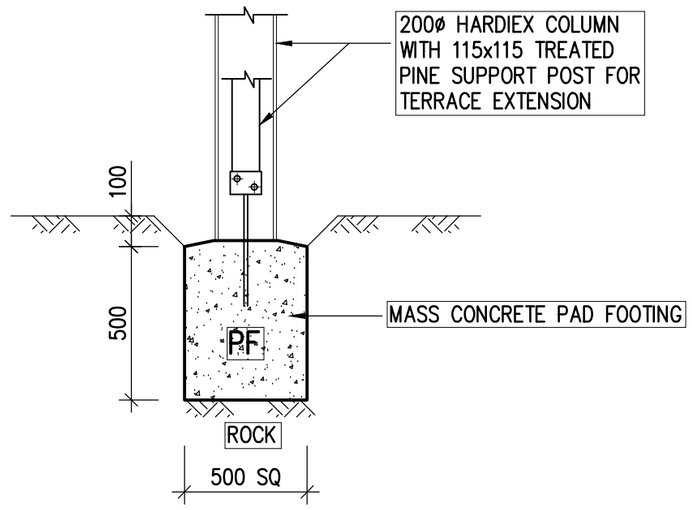

TYPICAL PAD FOOTING

1:20

ISSUE	DATE	APP'D	DESCRIPTION

REVISIONS

KNEEBONE & BERETTA CONSULTING PTY LTD
CONSULTING STRUCTURAL & CIVIL ENGINEERS
ABN 43 734 246 264
GROUP
Member of: CONSULT AUSTRALIA
UNIT 18, 7 ANELLA AVENUE CASTLE HILL NSW 2154
PH (02) 8850-0799 FAX (02) 8850-1277
EMAIL: info@kbgconsulting.com WEB: www.kbgconsulting.com

SCALE	1:100, 1:20
DATE	21-09-15
DRAWN	A.P
CHECKED	R.K / E.L.B
APPROVED	

CLIENT : FOR Mr A & Mrs P BUTLER

PROPOSED ADDITIONSTO RESIDENCE AT
76 HOPETOUN AVENUE, VAUCLUSE
FOR Mr A & Mrs P BUTLER

STRUCTURAL DETAILS

DRAWING NUMBER 79243-1

ISSUE

Electrical Services Layout

Legend

Item	Symbol	No.
Light Points (inc switch)	○	43 OFF
Down Lights (inc switch)	(D)	Nil
Wall Lights (inc switch)	⊢○	Nil
Two way switch	X—○—X	2 OFF
Single power points	•	Nil
Double power points	••	24 OFF
Wall oven - Electric GPO	WO	Nil
Stove - Electric GPO	ST	Nil
Wall oven - Gas & GPO	WO•	Nil
Stove - Gas & GPO	ST•	Nil
Range Hood GPO	RH•	Nil
Refrigerator GPO	R•	Nil
Microwave GPO	M•	Nil
Dishwasher GPO	DW•	Nil
T.V. Point	△	5 OFF
Ceiling Exhaust Fan	EF	Nil
Wall Exhaust Fan	EF	Nil
Exhaust fan 3 in 1	3 IN 1	3 OFF
Exhaust fan 4 in 1	4 IN 1	Nil
Ceiling fan		Nil
Phone point	▲	Nil
Data Cable	@	Nil
Hardwired Heated Towel	•	3 OFF
Other		Nil
Other		Nil

NOTE:

1. Light switches where possible are placed 1300mm above floor and within 200mm from door architrave.
2. Power points will be placed 300mm above floor unless noted otherwise.
3. Owner to please mark up any changes to the layout in red.

DATED:

OWNER:

OWNER:

BUILDER:

First Floor Electrical Layout

FOR: MR A BUTLER & MRS P BUTLER

AT: 76 HOPETOUN AVENUE, VAUCLUSE NSW 2030

SCALE: 1 : NTS

SHEET: 1 OF 3

JOB NO: 7643/15

D

Cape Cod AUSTRALIA

Electrical Services Layout

Legend

Item	Symbol	No.
Light Points (inc switch)	○	65 OFF
Down Lights (inc switch)	(D)	Nil
Wall Lights (inc switch)	⊢○	Nil
Two way switch	X—○—X	2 OFF
Single power points	•	5 OFF
Double power points	••	32 OFF
Wall oven - Electric GPO	WO	1 OFF
Stove - Electric GPO	ST	Nil
Wall oven - Gas & GPO	WO•	Nil
Stove - Gas & GPO	ST•	Nil
Range Hood GPO	RH•	Nil
Refrigerator GPO	R•	Nil
Microwave GPO	M•	Nil
Dishwasher GPO	DW•	Nil
T.V. Point	△	2 OFF
Ceiling Exhaust Fan	EF⊗	Nil
Wall Exhaust Fan	EF⊗	Nil
Exhaust fan 3 in 1	3 IN 1⊗	Nil
Exhaust fan 4 in 1	4 IN 1⊗	Nil
Ceiling fan	✕	Nil
Phone point	▲	Nil
Data Cable	@	Nil
Hardwired Heated Towel	•	1 OFF
Wall Exhaust Fan	EF⊗	1 OFF
Inline Ducted Exhaust Fan	EF⊗	1 OFF

NOTE:

1. Light switches where possible are placed 1300mm above floor and within 200mm from door architrave.
2. Power points will be placed 300mm above floor unless noted otherwise.
3. Owner to please mark up any changes to the layout in red.

DATED:

OWNER:

OWNER:

BUILDER:

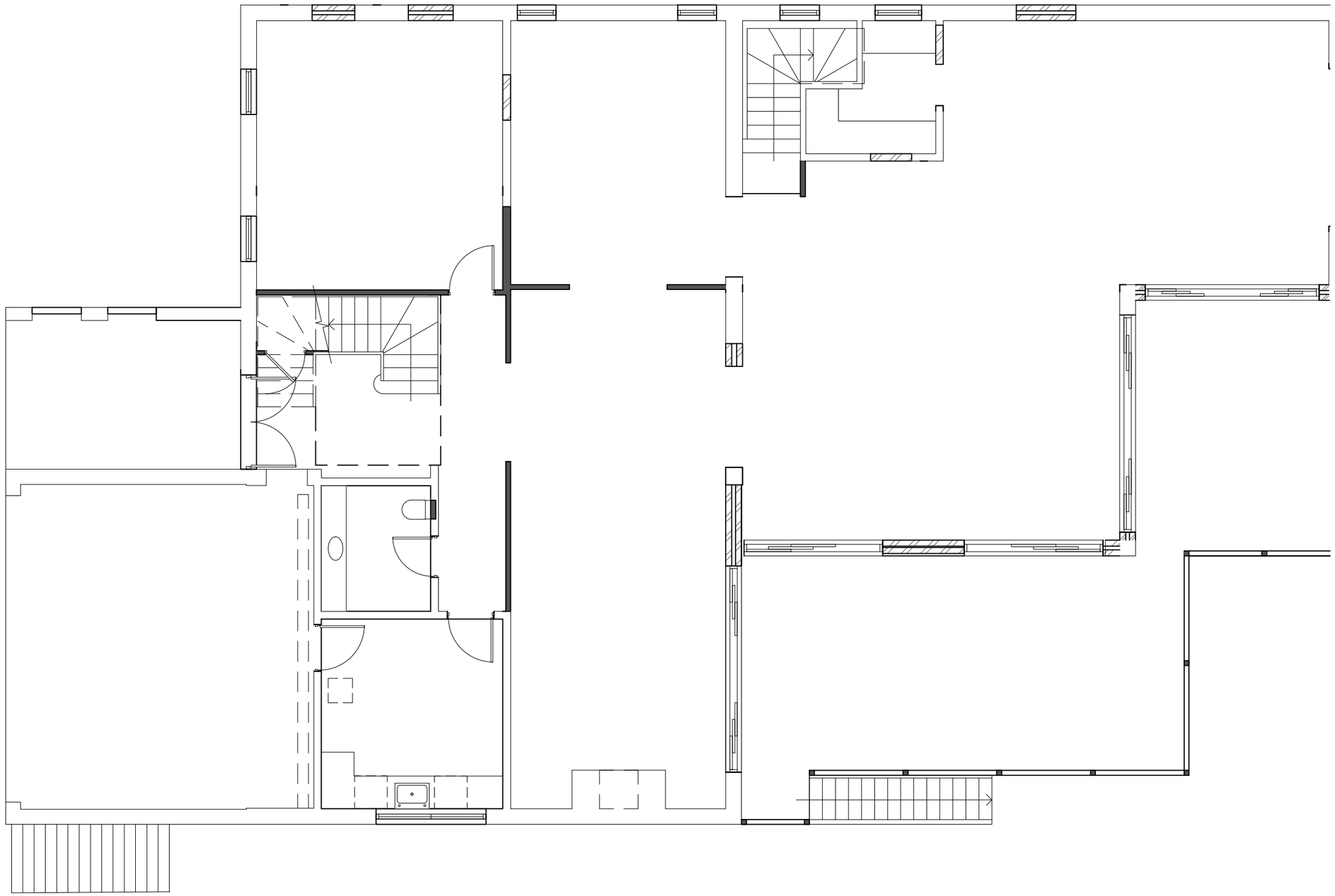

Ground Floor Electrical Layout

FOR: MR A BUTLER & MRS P BUTLER	AT: 76 HOPETOUN AVENUE, VAUCLUSE NSW 2030	SCALE: 1 : NTS	SHEET: 2 OF 3	JOB NO: 7643/15	D	Cape Cod AUSTRALIA

Electrical Services Layout

Legend

Item	Symbol	No.
Light Points (inc switch)	○	25 OFF
Down Lights (inc switch)	Ⓓ	Nil
Wall Lights (inc switch)	⊢○	Nil
Two way switch	X—○—X	2 OFF
Single power points	•	Nil
Double power points	••	12 OFF
Wall oven - Electric GPO	WO	Nil
Stove - Electric GPO	ST	Nil
Wall oven - Gas & GPO	WO•	Nil
Stove - Gas & GPO	ST•	Nil
Range Hood GPO	RH•	Nil
Refrigerator GPO	R•	Nil
Microwave GPO	M•	Nil
Dishwasher GPO	DW•	Nil
T.V. Point	△	1 OFF
Ceiling Exhaust Fan	EF	Nil
Wall Exhaust Fan	EF	Nil
Exhaust fan 3 in 1	3 IN 1	Nil
Exhaust fan 4 in 1	4 IN 1	Nil
Ceiling fan		Nil
Phone point	▲	Nil
Data Cable	@	Nil
Wall Exhaust Fan	EF	1 OFF
Hardwired Heated Towel	•	1 OFF
Other		Nil

NOTE:

1. Light switches where possible are placed 1300mm above floor and within 200mm from door architrave.
2. Power points will be placed 300mm above floor unless noted otherwise.
3. Owner to please mark up any changes to the layout in red.

DATED:

OWNER:

OWNER:

BUILDER:

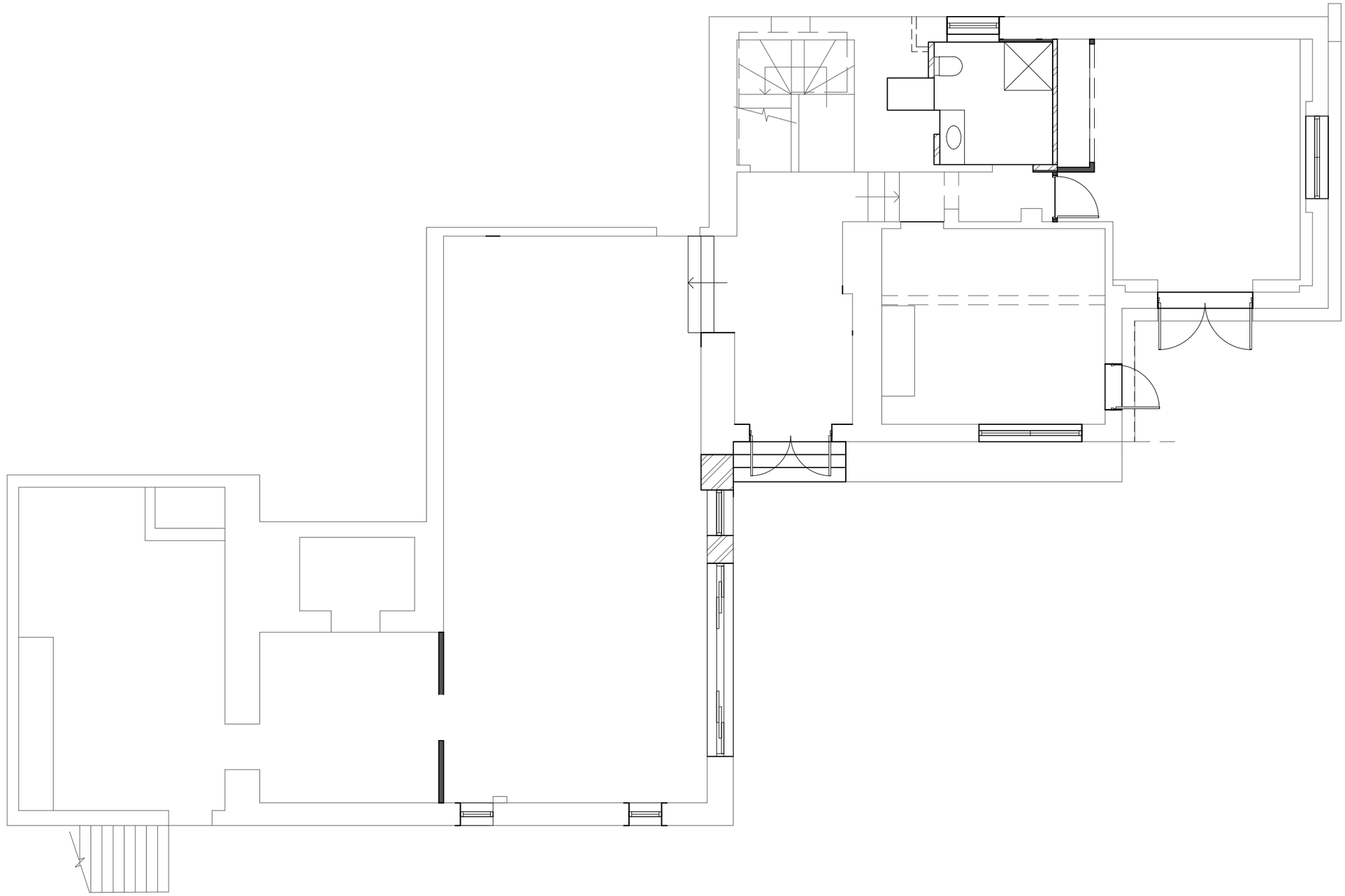

Lower Ground Floor Electrical Layout

FOR: MR A BUTLER & MRS P BUTLER	AT: 76 HOPETOUN AVENUE, VAUCLUSE NSW 2030	SCALE: 1:NTS	SHEET: 3 OF 3	JOB NO: 7643/15	D	Cape Cod AUSTRALIA

WET AREA LAYOUT

LEGEND

FIXTURE	No.
Bath Tub	1 OFF
Bath Taps	1 OFF
Shower Screen	1 OFF
Shower Taps	1 OFF
Shower Rose	1 OFF
Vanity	1 OFF
Vanity Mirror	1 OFF
Vanity Taps	2 OFF
WC Suite	1 OFF
Soap Holder	1 OFF
Paper Roll Holder	1 OFF
Towel Rail	1 OFF
Laundry Tub	Nil
Laundry Tub Taps	Nil
Washing Machine	Nil
Washing Machine Taps	Nil
Other	Nil
Other 02	Nil
NET AREA	m²
Floor Tiles	10.2
Wall Tiles	36.1

NOTE: STANDARD FLOOR WASTES ARE ALLOWED FOR WITHIN OUR COSTS. FLOOR TILES LARGER THAN 200x200mm MAY REQUIRE A LINEAR FLOOR WASTE. THESE WILL BE CHARGED AS AN EXTRA BY WAY OF A VARIATION.

DATED:

OWNER:

OWNER:

BUILDER:

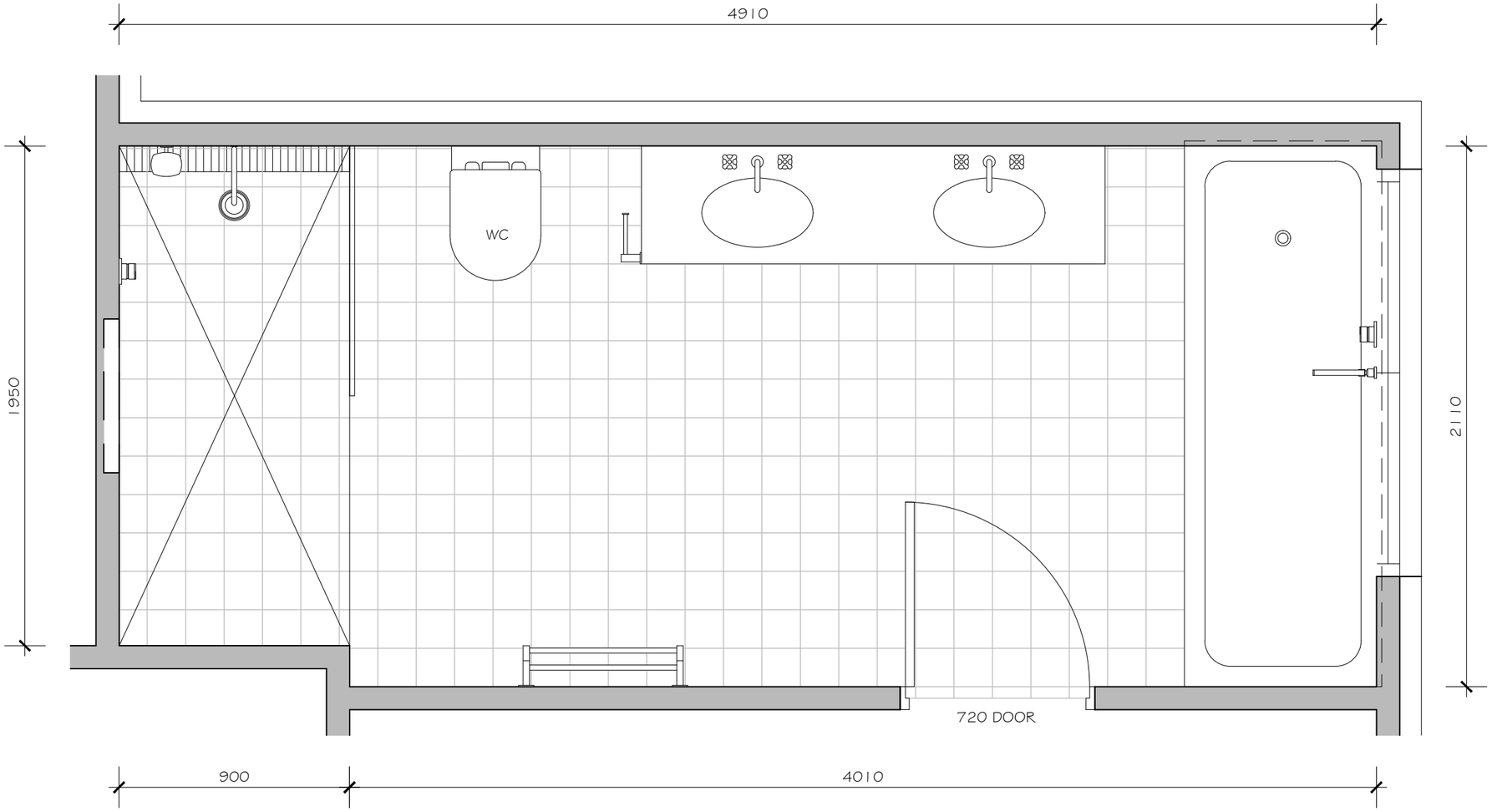

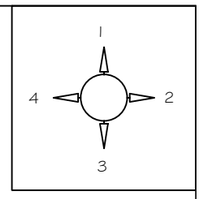

Ensuite 1 Plan

FOR: MR A BUTLER & MRS P BUTLER	AT: 76 HOPETOUN AVENUE, VAUCLUSE NSW 2030	SCALE: 1 : 20	SHEET: 1 OF 12	JOB NO: 7643/15	E	Cape Cod AUSTRALIA

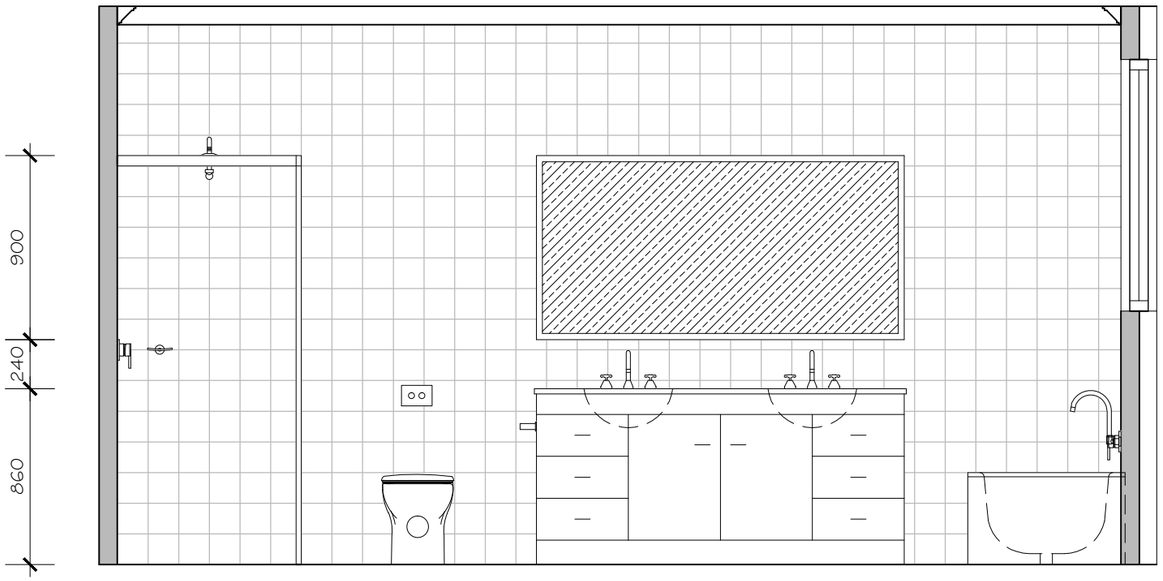

Elevation 1

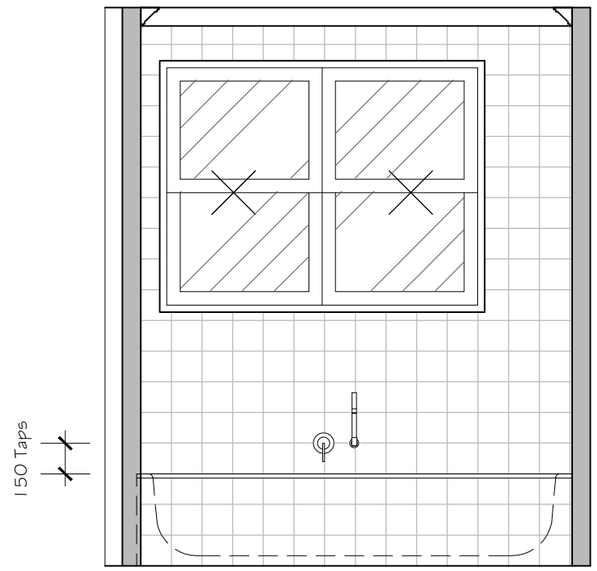

Elevation 2

DATED:	
OWNER:	
OWNER:	
BUILDER:	

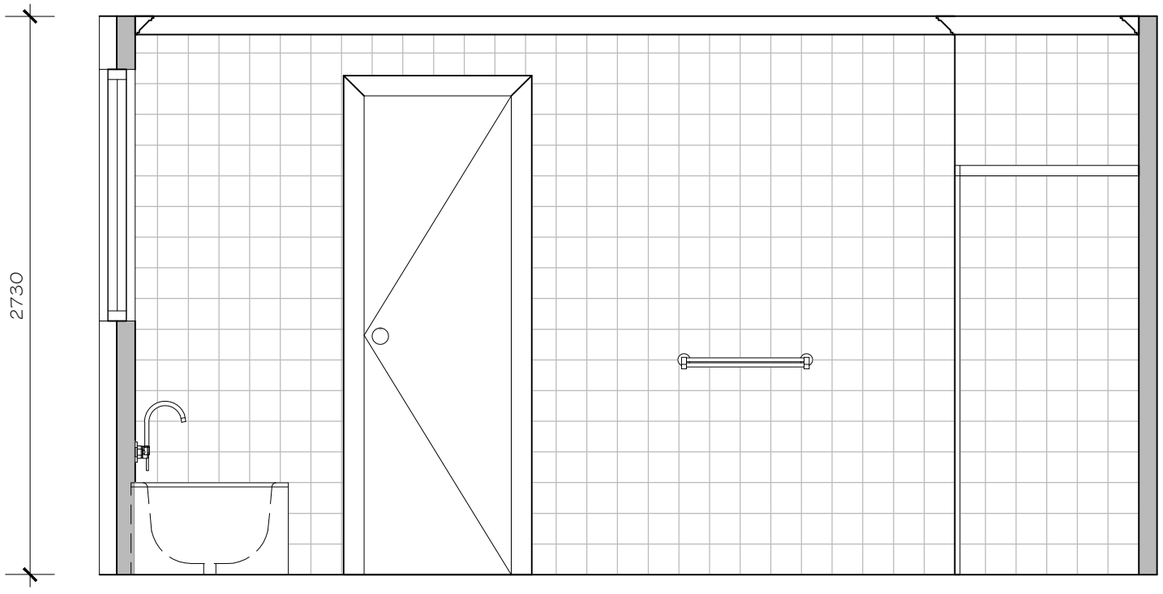

Elevation 3

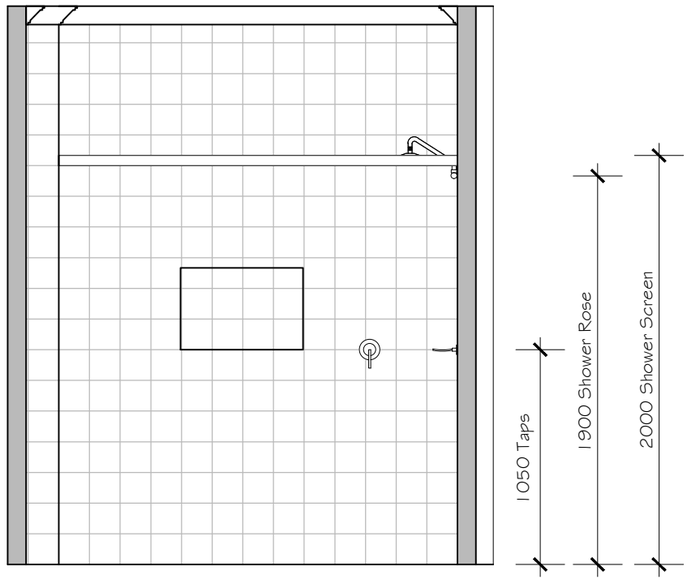

Elevation 4

FOR: MR A BUTLER & MRS P BUTLER	AT: 76 HOPETOUN AVENUE, VAUCLUSE NSW 2030	SCALE: 1 : 30	SHEET: 2 OF 12	JOB NO: 7643/15	E	Cape Cod AUSTRALIA

WET AREA LAYOUT

LEGEND	
FIXTURE	No.
Bath Tub	Nil
Bath Taps	Nil
Shower Screen	1 OFF
Shower Taps	1 OFF
Shower Rose	1 OFF
Vanity	1 OFF
Vanity Mirror	1 OFF
Vanity Taps	1 OFF
WC Suite	1 OFF
Soap Holder	1 OFF
Paper Roll Holder	1 OFF
Towel Rail	1 OFF
Laundry Tub	Nil
Laundry Tub Taps	Nil
Washing Machine	Nil
Washing Machine Taps	Nil
Other	Nil
Other 02	Nil
NET AREA	m²
Floor Tiles	4.1
Wall Tiles	22.3

NOTE: STANDARD FLOOR WASTES ARE ALLOWED FOR WITHIN OUR COSTS. FLOOR TILES LARGER THAN 200x200mm MAY REQUIRE A LINEAR FLOOR WASTE. THESE WILL BE CHARGED AS AN EXTRA BY WAY OF A VARIATION.

DATED:

OWNER:

OWNER:

BUILDER:

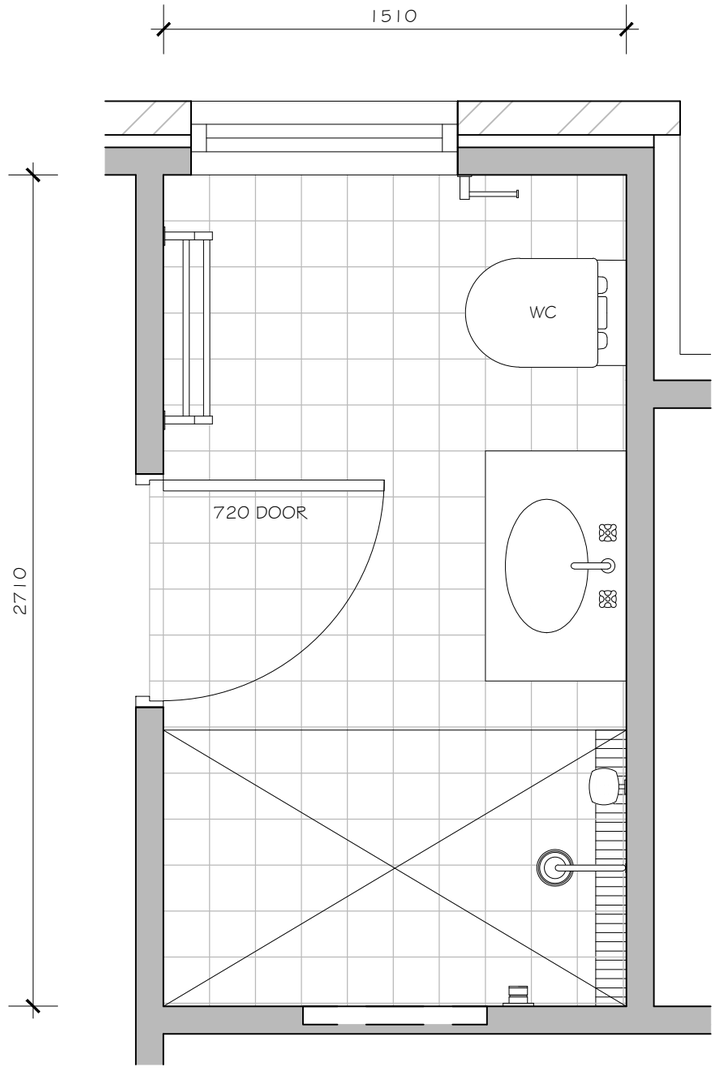

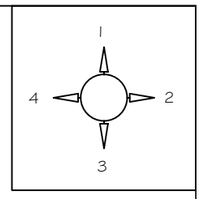

Ensuite 2 Plan

FOR: MR A BUTLER & MRS P BUTLER | AT: 76 HOPETOUN AVENUE, VAUCLUSE NSW 2030 | SCALE: 1 : 20 | SHEET: 3 OF 12 | JOB NO: 7643/15 | E | Cape Cod AUSTRALIA

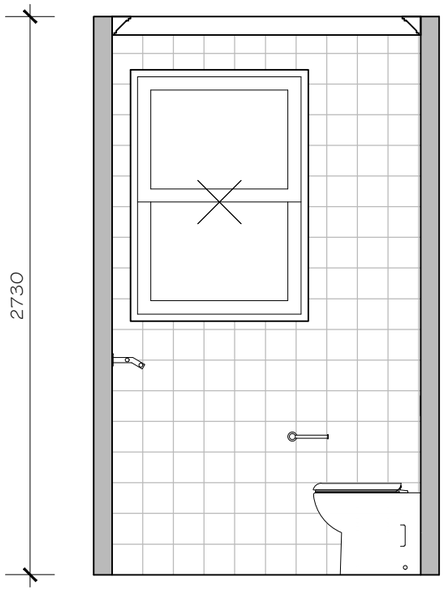

Elevation 1

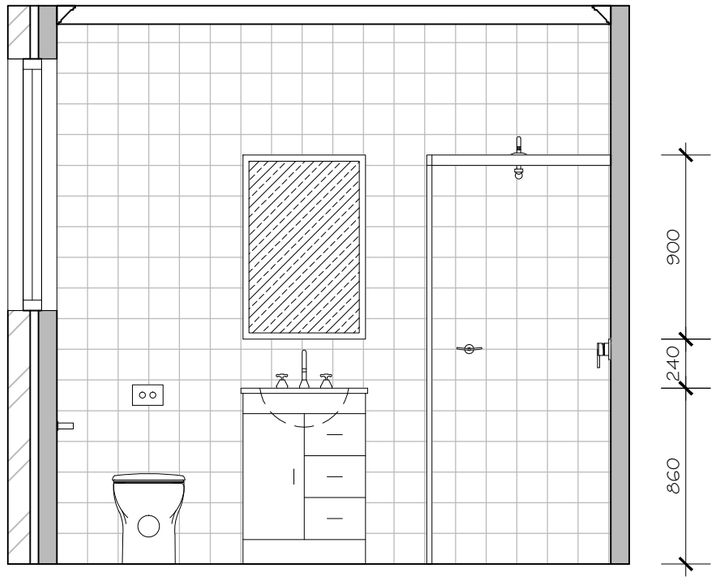

Elevation 2

DATED:	
OWNER:	
OWNER:	
BUILDER:	

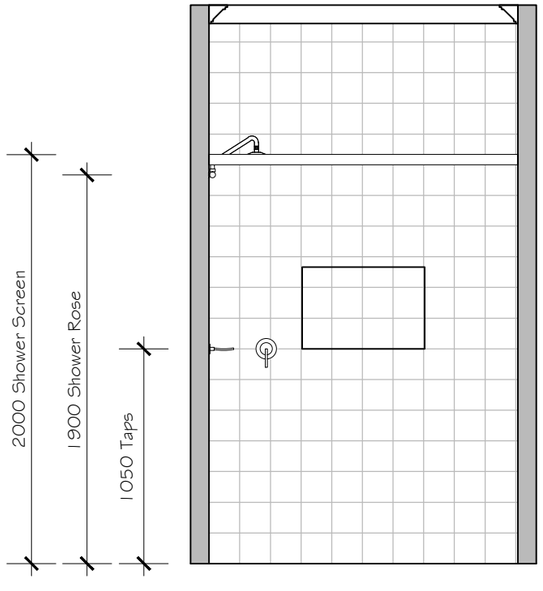

Elevation 3

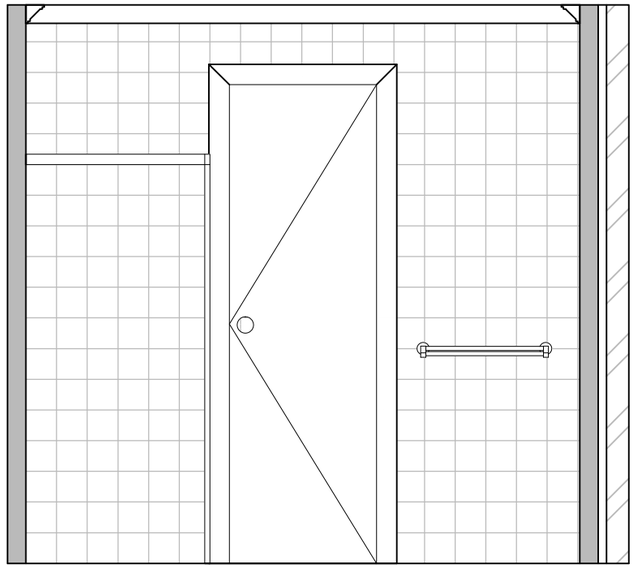

Elevation 4

FOR: MR A BUTLER & MRS P BUTLER	AT: 76 HOPETOUN AVENUE, VAUCLUSE NSW 2030	SCALE: 1 : 30	SHEET: 4 OF 12	JOB NO: 7643/15	E

Cape Cod AUSTRALIA

WET AREA LAYOUT

LEGEND	
FIXTURE	No.
Bath Tub	Nil
Bath Taps	Nil
Shower Screen	1 OFF
Shower Taps	1 OFF
Shower Rose	1 OFF
Vanity	1 OFF
Vanity Mirror	1 OFF
Vanity Taps	2 OFF
WC Suite	1 OFF
Soap Holder	1 OFF
Paper Roll Holder	1 OFF
Towel Rail	1 OFF
Laundry Tub	Nil
Laundry Tub Taps	Nil
Washing Machine	Nil
Washing Machine Taps	Nil
Other	Nil
Other 02	Nil
NET AREA	m²
Floor Tiles	8.3
Wall Tiles	33.8

NOTE: STANDARD FLOOR WASTES ARE ALLOWED FOR WITHIN OUR COSTS. FLOOR TILES LARGER THAN 200x200mm MAY REQUIRE A LINEAR FLOOR WASTE. THESE WILL BE CHARGED AS AN EXTRA BY WAY OF A VARIATION.

DATED:

OWNER:

OWNER:

BUILDER:

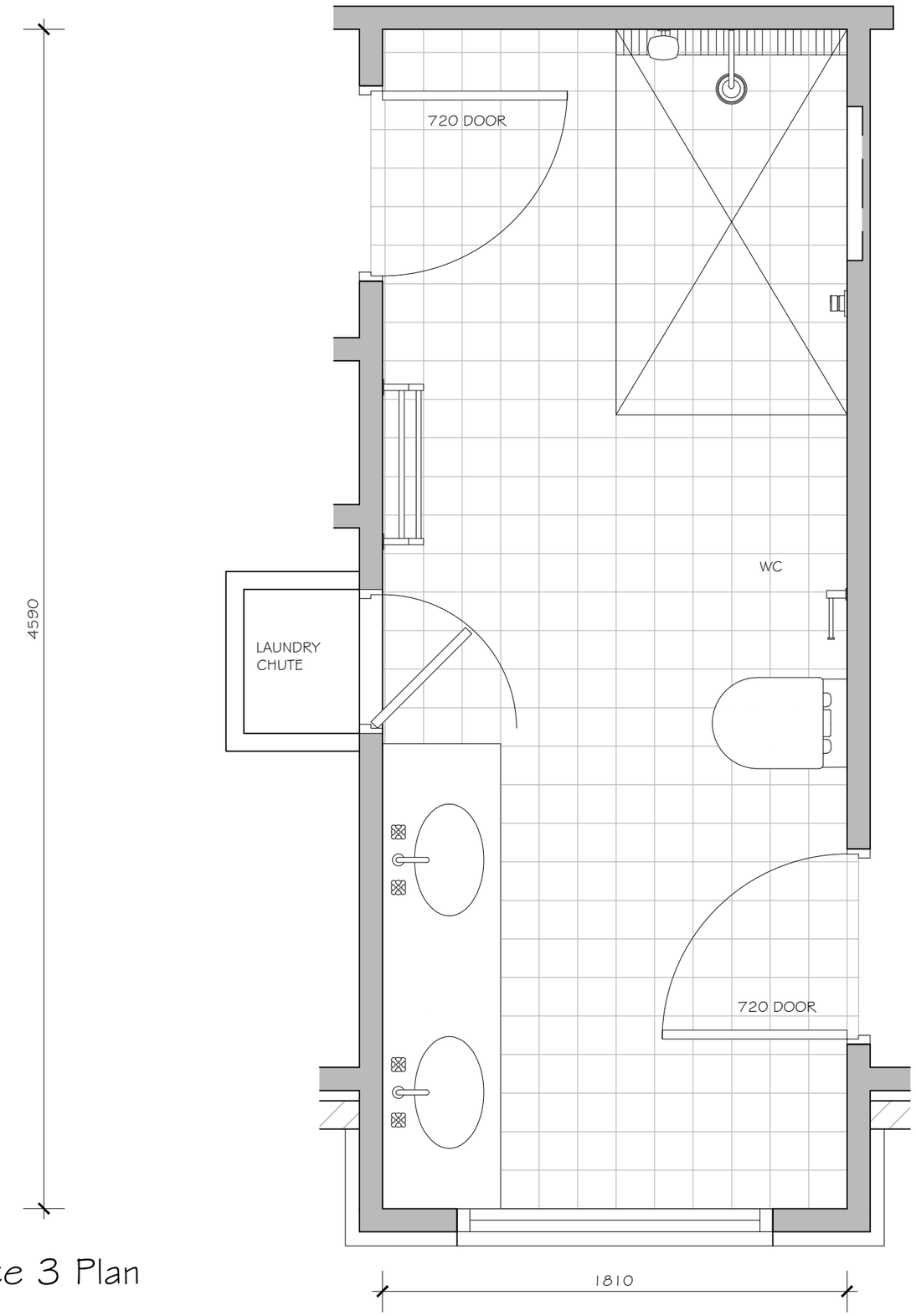

Ensuite 3 Plan

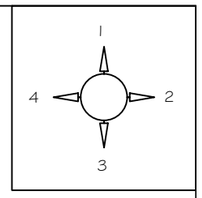

FOR: MR A BUTLER & MRS P BUTLER | AT: 76 HOPETOUN AVENUE, VAUCLUSE NSW 2030 | SCALE: 1 : 20 | SHEET: 5 OF 12 | JOB NO: 7643/15 | E | Cape Cod AUSTRALIA

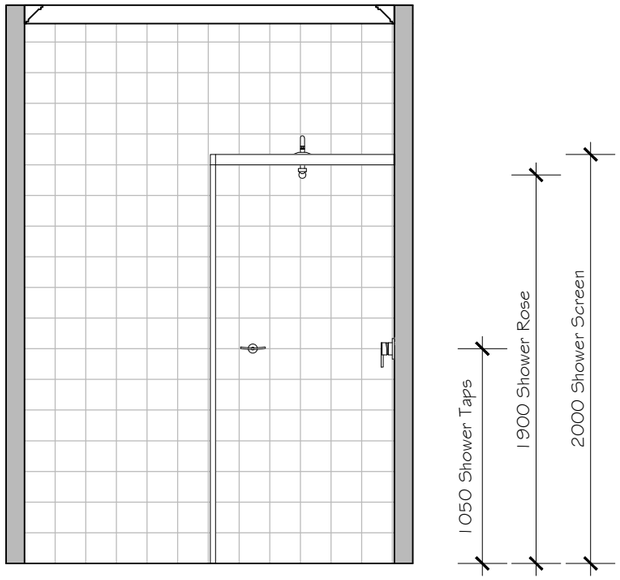

Elevation 1

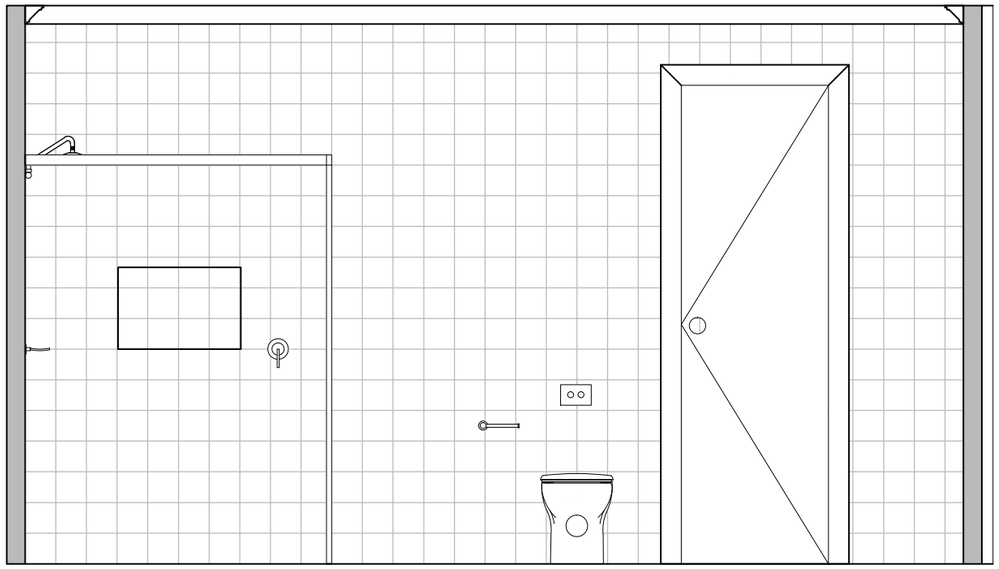

Elevation 2

DATED:	
OWNER:	
OWNER:	
BUILDER:	

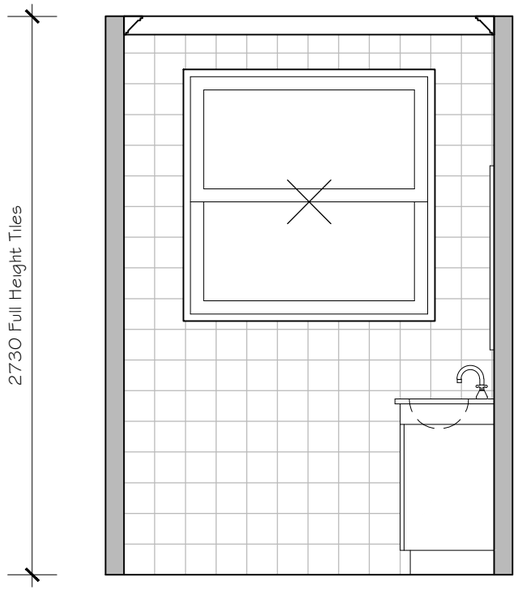

Elevation 3

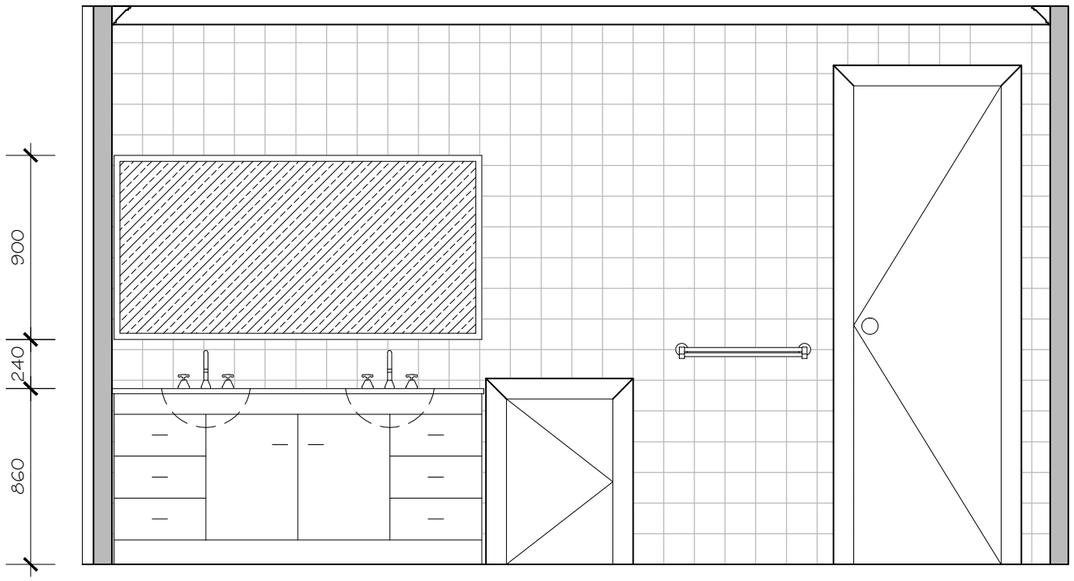

Elevation 4

FOR: MR A BUTLER & MRS P BUTLER	AT: 76 HOPETOUN AVENUE, VAUCLUSE NSW 2030	SCALE: 1 : 30	SHEET: 6 OF 12	JOB NO: 7643/15	E	Cape Cod AUSTRALIA

WET AREA LAYOUT

LEGEND

FIXTURE	No.
Bath Tub	Nil
Bath Taps	Nil
Shower Screen	Nil
Shower Taps	Nil
Shower Rose	Nil
Vanity	1 OFF
Vanity Mirror	1 OFF
Vanity Taps	1 OFF
WC Suite	1 OFF
Soap Holder	Nil
Paper Roll Holder	1 OFF
Towel Rail	1 OFF
Laundry Tub	Nil
Laundry Tub Taps	Nil
Washing Machine	Nil
Washing Machine Taps	Nil
Other	Nil
Other 02	Nil
NET AREA	m²
Floor Tiles	4.6
Wall Tiles	5.6

NOTE: STANDARD FLOOR WASTES ARE ALLOWED FOR WITHIN OUR COSTS. FLOOR TILES LARGER THAN 200x200mm MAY REQUIRE A LINEAR FLOOR WASTE. THESE WILL BE CHARGED AS AN EXTRA BY WAY OF A VARIATION.

DATED:

OWNER:

OWNER:

BUILDER:

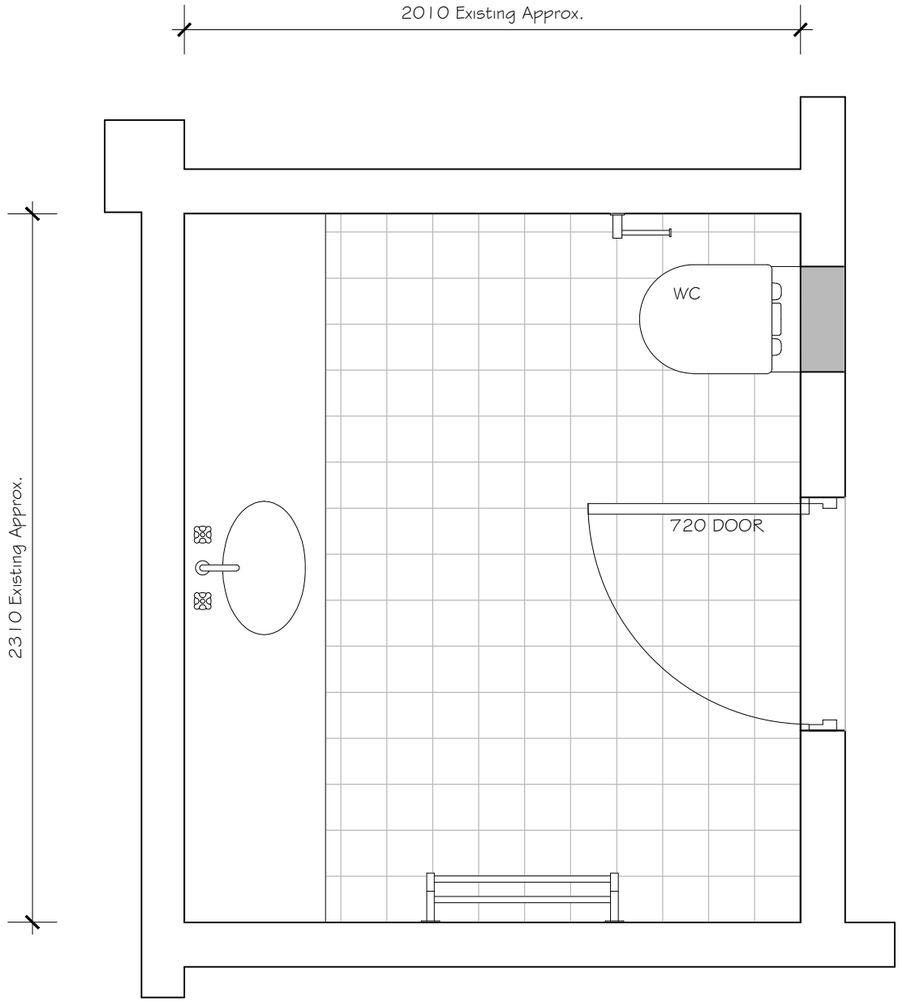

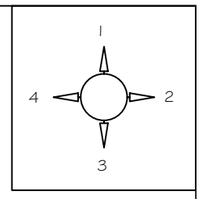

Powder Room Plan

FOR: MR A BUTLER & MRS P BUTLER	AT: 76 HOPETOUN AVENUE, VAUCLUSE NSW 2030	SCALE: 1 : 20	SHEET: 7 OF 12	JOB NO: 7643/15	E	Cape Cod AUSTRALIA

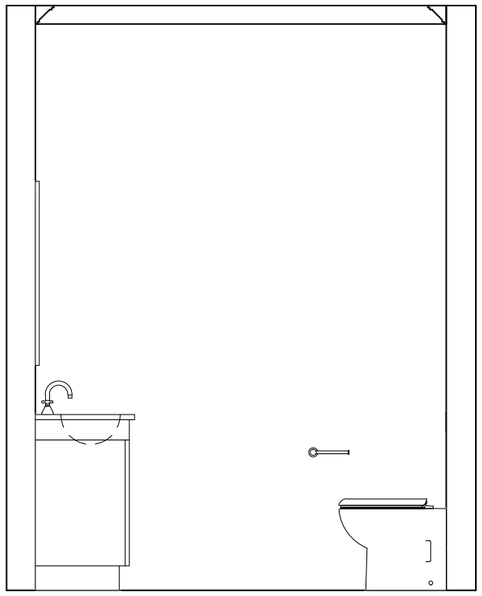

Elevation 1

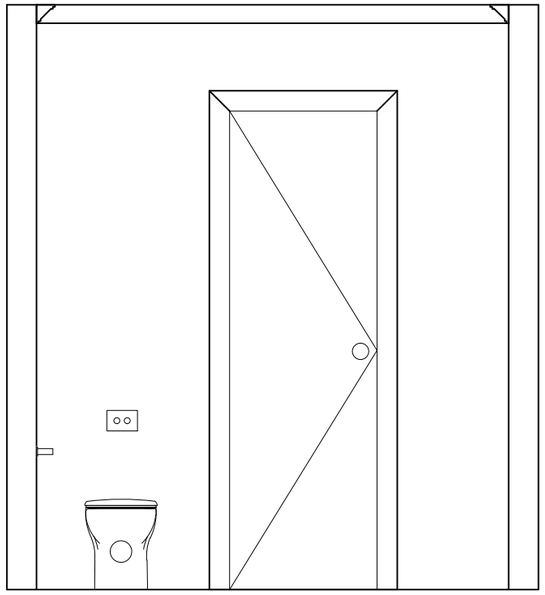

Elevation 2

DATED:	
OWNER:	
OWNER:	
BUILDER:	

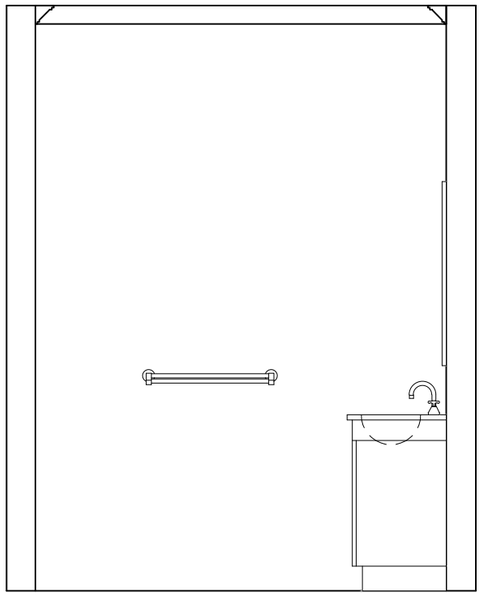

Elevation 3

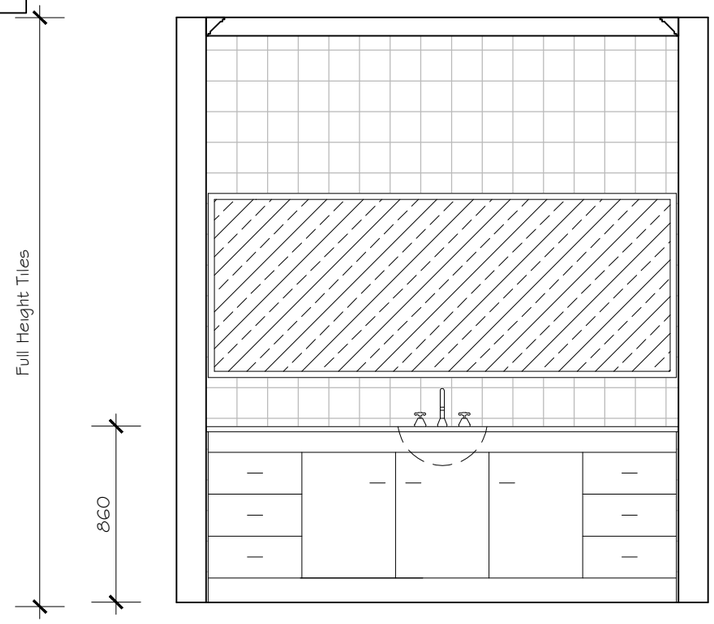

Elevation 4

FOR: MR A BUTLER & MRS P BUTLER	AT: 76 HOPETOUN AVENUE, VAUCLUSE NSW 2030	SCALE: 1 : 30	SHEET: 8 OF 12	JOB NO: 7643/15	E	Cape Cod AUSTRALIA

WET AREA LAYOUT

LEGEND

FIXTURE	No.
Bath Tub	Nil
Bath Taps	Nil
Shower Screen	Nil
Shower Taps	Nil
Shower Rose	Nil
Vanity	Nil
Vanity Mirror	Nil
Vanity Taps	Nil
WC Suite	Nil
Soap Holder	Nil
Paper Roll Holder	Nil
Towel Rail	Nil
Laundry Tub	1 OFF
Laundry Tub Taps	1 OFF
Washing Machine	Nil
Washing Machine Taps	1 OFF
Other	Nil
Other 02	Nil
NET AREA	m²
Floor Tiles	11.6
Wall Tiles	16.4

NOTE: STANDARD FLOOR WASTES ARE ALLOWED FOR WITHIN OUR COSTS. FLOOR TILES LARGER THAN 200x200mm MAY REQUIRE A LINEAR FLOOR WASTE. THESE WILL BE CHARGED AS AN EXTRA BY WAY OF A VARIATION.

DATED:

OWNER:

OWNER:

BUILDER:

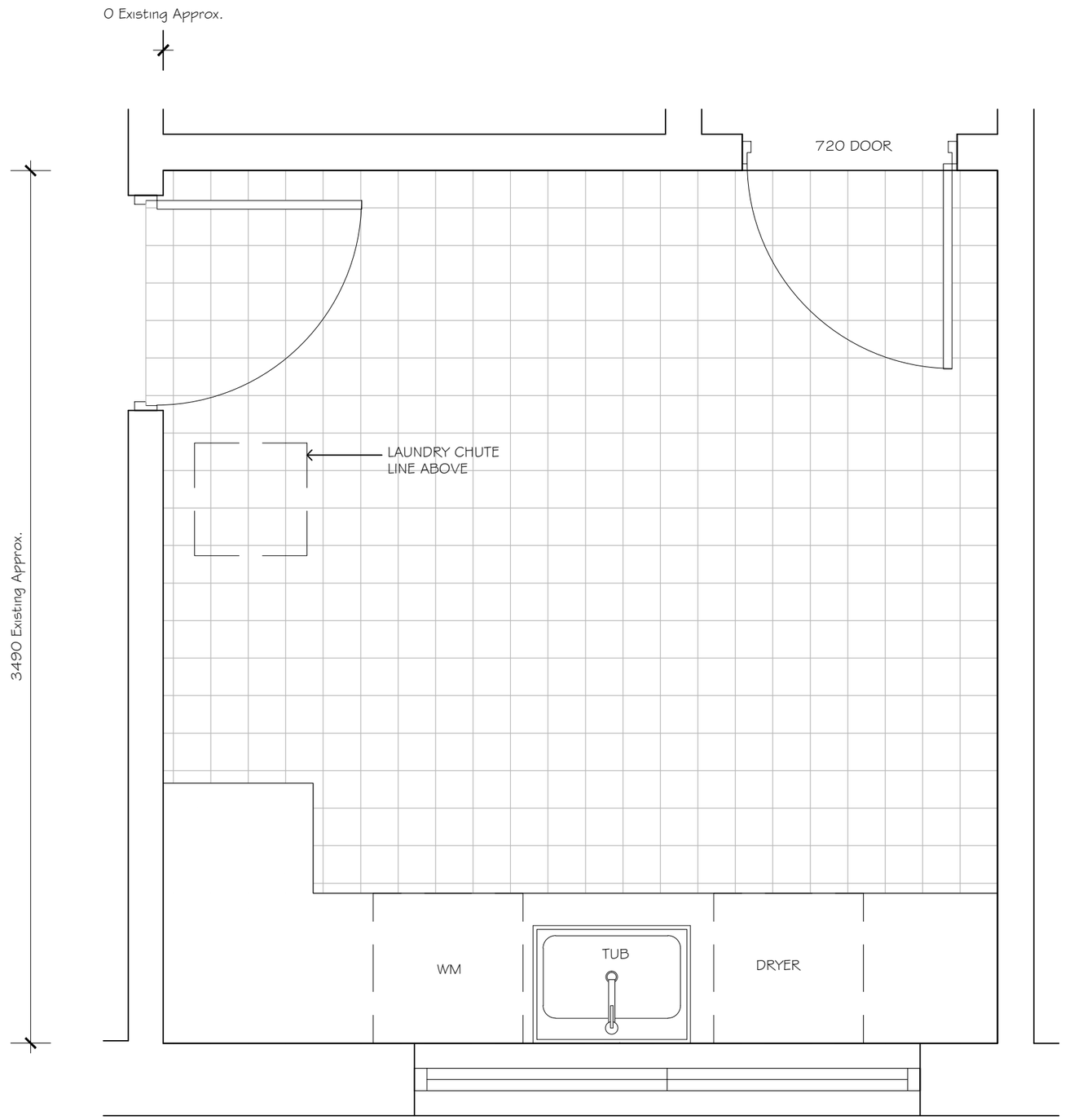

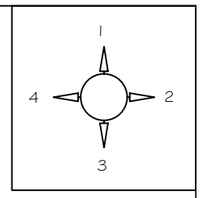

Laundry Plan

FOR: MR A BUTLER & MRS P BUTLER | AT: 76 HOPETOUN AVENUE, VAUCLUSE NSW 2030 | SCALE: 1 : 20 | SHEET: 9 OF 12 | JOB NO: 7643/15 | E | Cape Cod AUSTRALIA

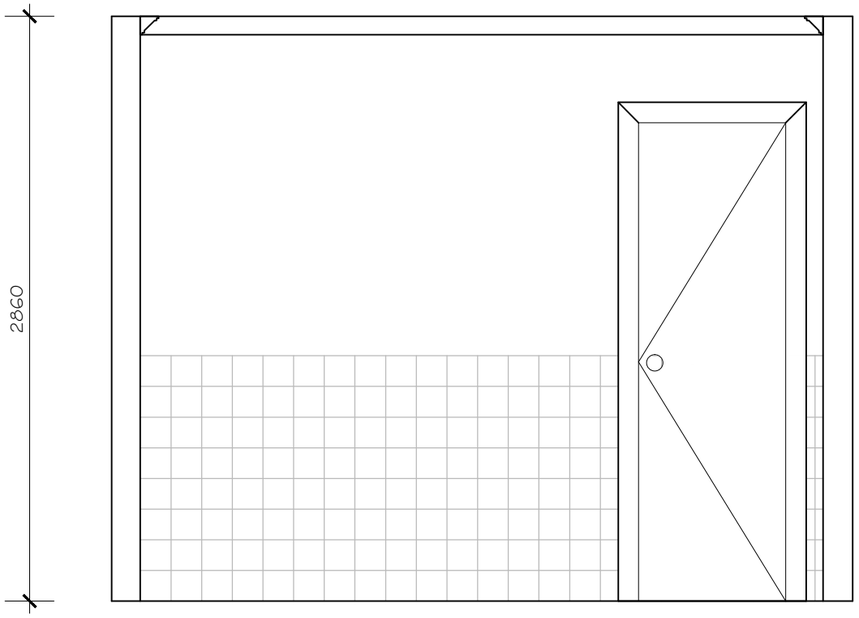

Elevation 1

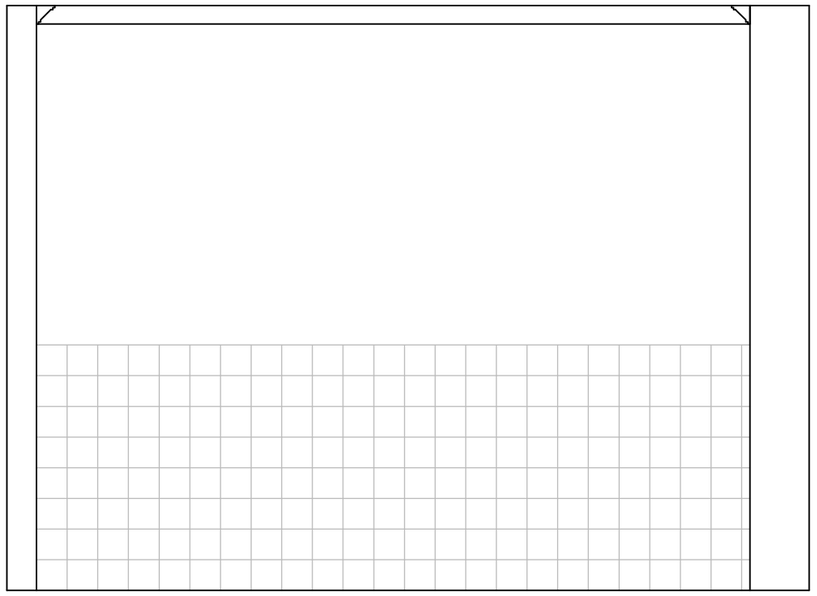

Elevation 2

DATED:	
OWNER:	
OWNER:	
BUILDER:	

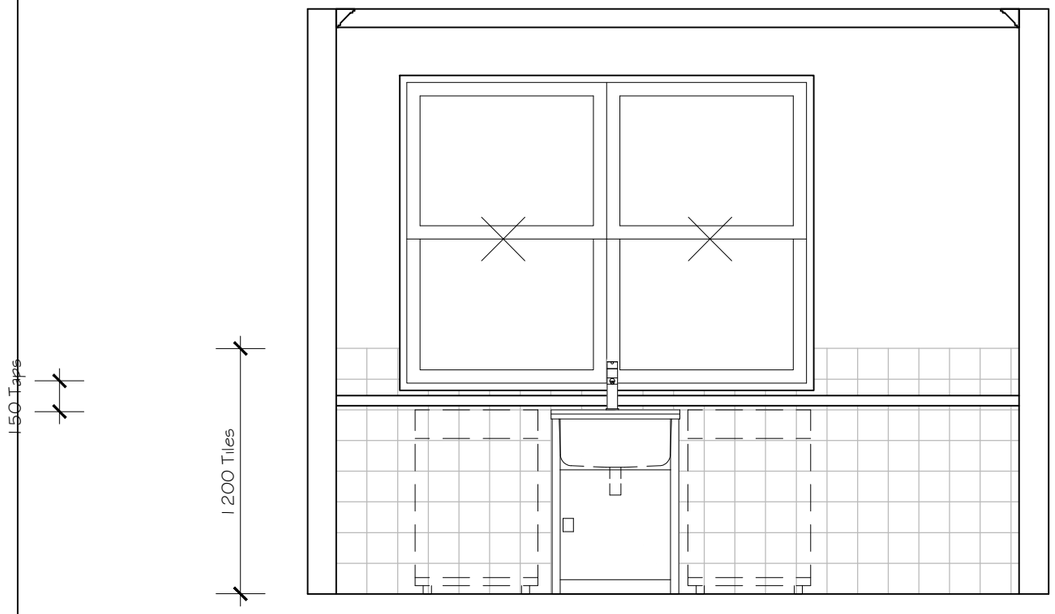

Elevation 3

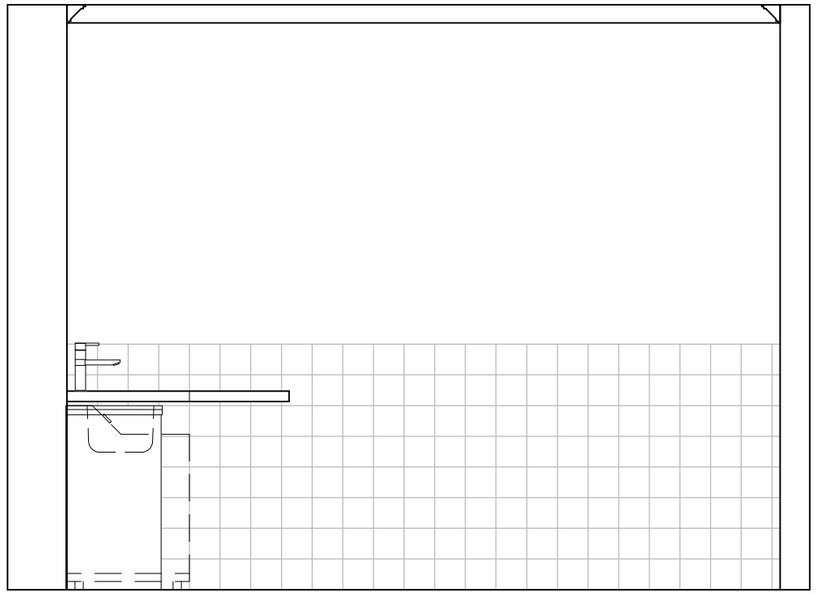

Elevation 4

FOR: MR A BUTLER & MRS P BUTLER	AT: 76 HOPETOUN AVENUE, VAUCLUSE NSW 2030	SCALE: 1 : 30	SHEET: 10 OF 12	JOB NO: 7643/15	E	Cape Cod AUSTRALIA

WET AREA LAYOUT

LEGEND	
FIXTURE	No.
Bath Tub	Nil
Bath Taps	Nil
Shower Screen	1 OFF
Shower Taps	1 OFF
Shower Rose	1 OFF
Vanity	1 OFF
Vanity Mirror	1 OFF
Vanity Taps	1 OFF
WC Suite	1 OFF
Soap Holder	1 OFF
Paper Roll Holder	1 OFF
Towel Rail	1 OFF
Laundry Tub	Nil
Laundry Tub Taps	Nil
Washing Machine	Nil
Washing Machine Taps	Nil
Other	Nil
Other 02	Nil
NET AREA	m²
Floor Tiles	5.1
Wall Tiles	20.6

NOTE: STANDARD FLOOR WASTES ARE ALLOWED FOR WITHIN OUR COSTS. FLOOR TILES LARGER THAN 200x200mm MAY REQUIRE A LINEAR FLOOR WASTE. THESE WILL BE CHARGED AS AN EXTRA BY WAY OF A VARIATION.

DATED:

OWNER:

OWNER:

BUILDER:

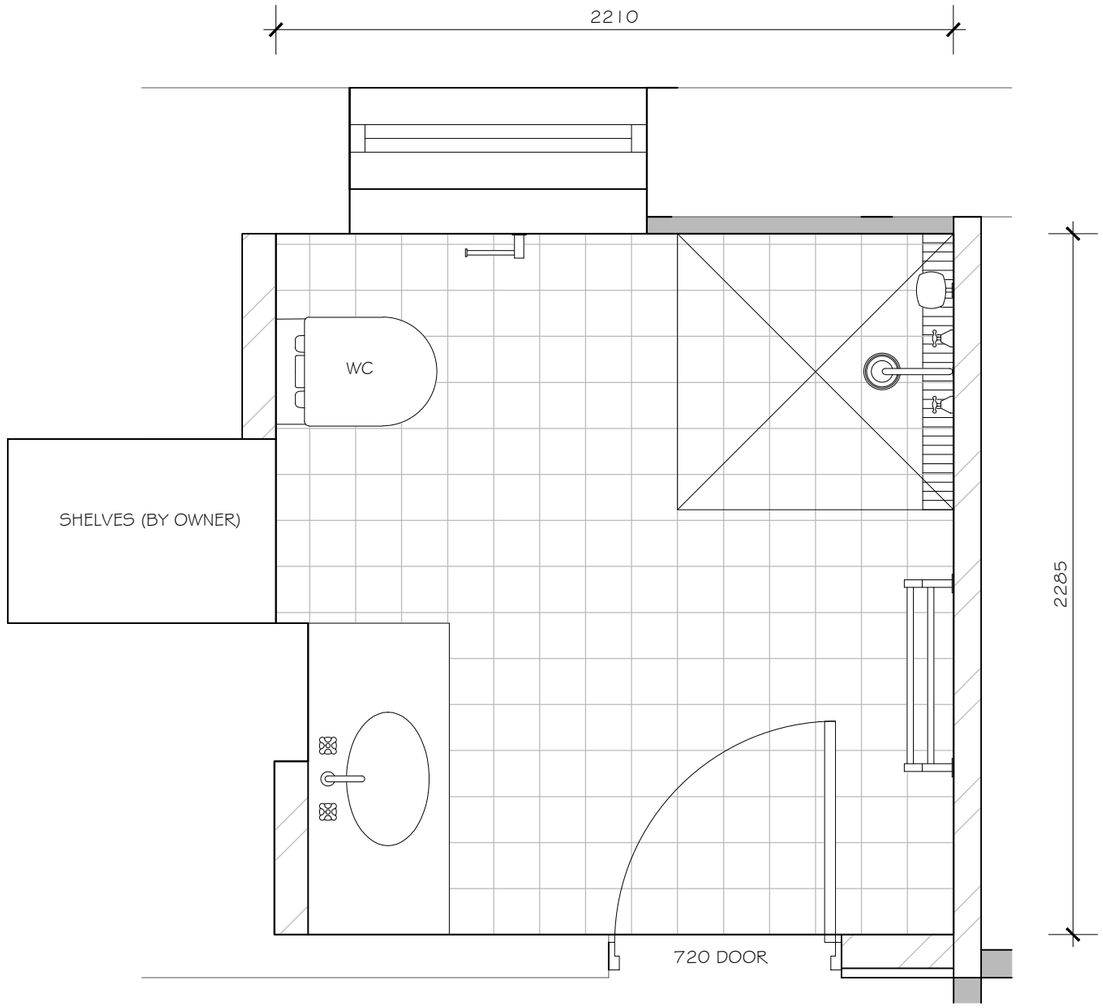

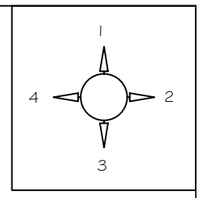

Shower Plan

FOR: MR A BUTLER & MRS P BUTLER | AT: 76 HOPETOUN AVENUE, VAUCLUSE NSW 2030 | SCALE: 1 : 20 | SHEET: 11 OF 12 | JOB NO: 7643/15 | E | Cape Cod AUSTRALIA

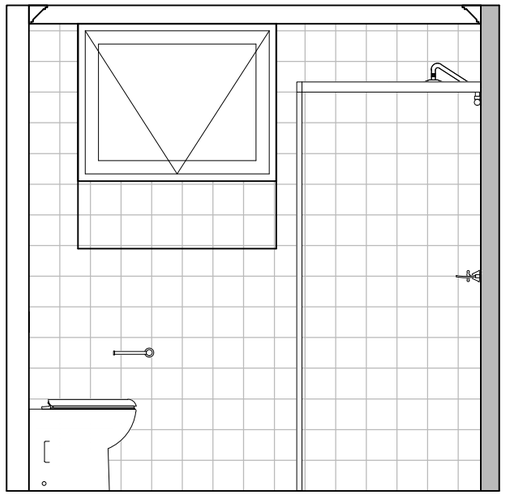

Elevation 1

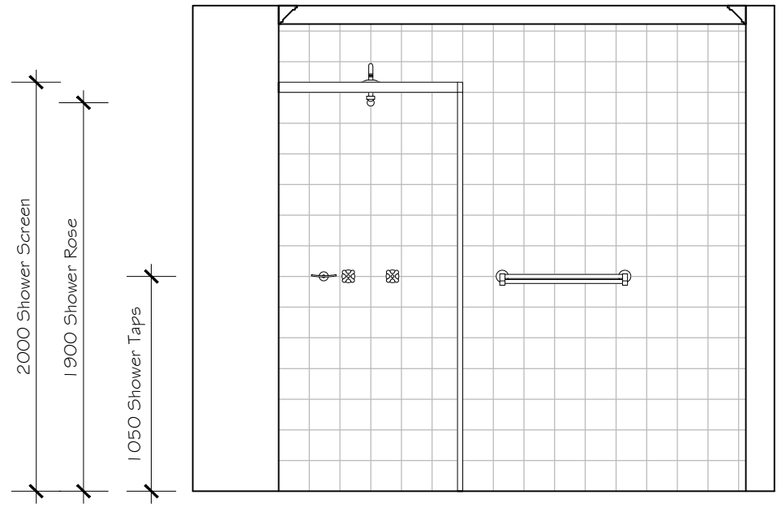

Elevation 2

DATED:	
OWNER:	
OWNER:	
BUILDER:	

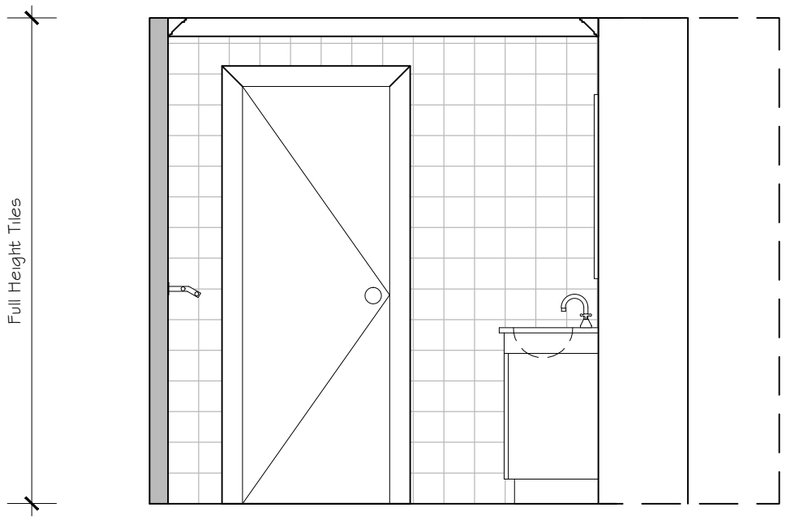

Elevation 3

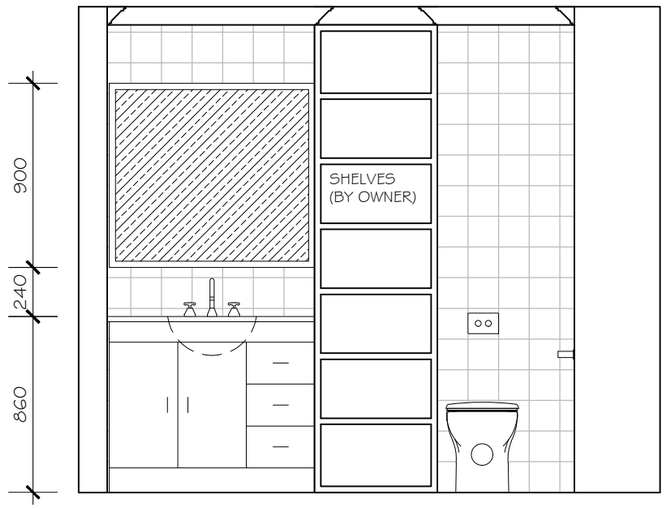

Elevation 4

FOR: MR A BUTLER & MRS P BUTLER	AT: 76 HOPETOUN AVENUE, VAUCLUSE NSW 2030	SCALE: 1 : 30	SHEET: 12 OF 12	JOB NO: 7643/15	E	Cape Cod AUSTRALIA