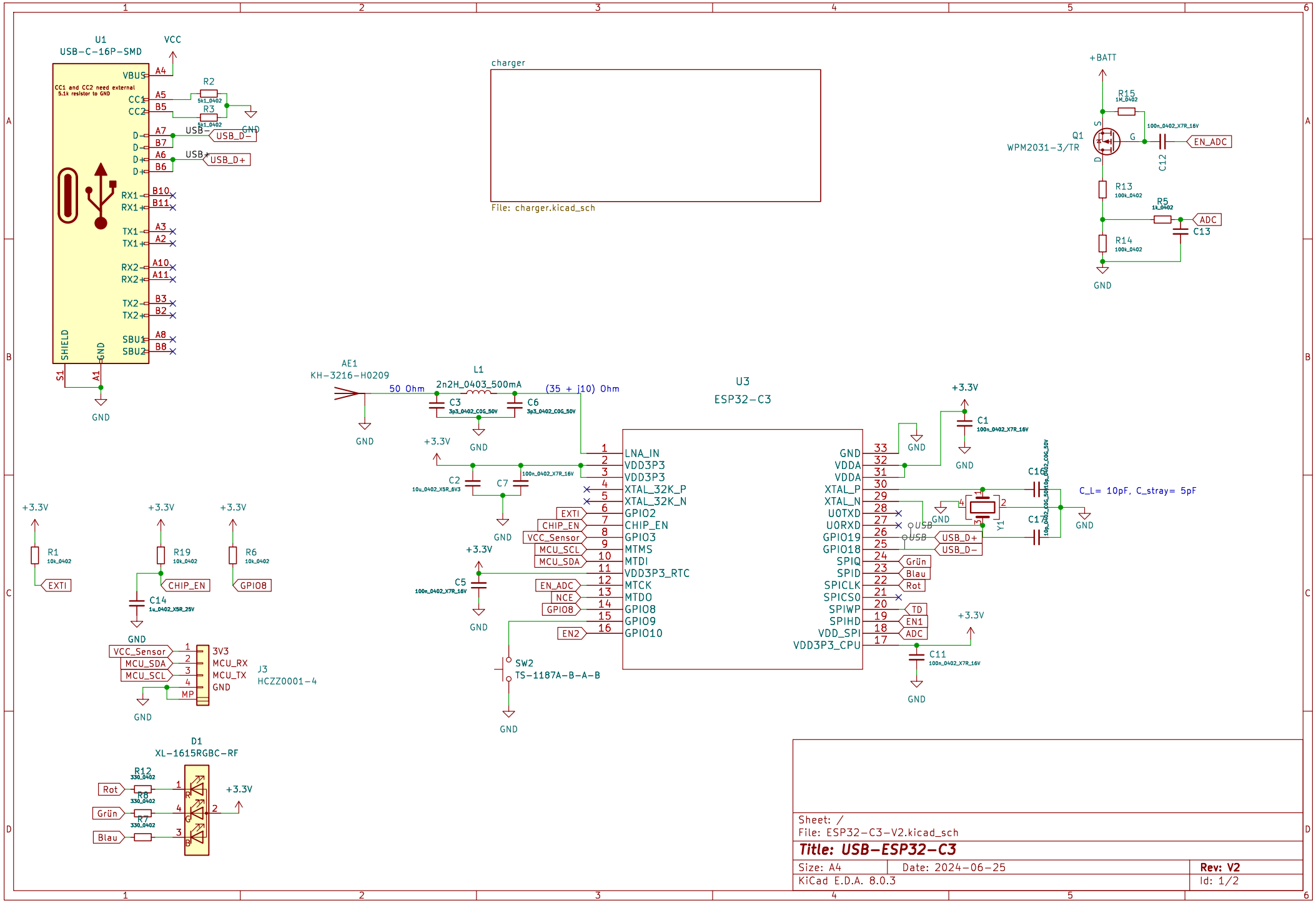

Sheet: /
File: ESP32-C3-V2.kicad_sch

Title: USB-ESP32-C3

Size: A4	Date: 2024-06-25	Rev: V2
KiCad E.D.A. 8.0.3		Id: 1/2

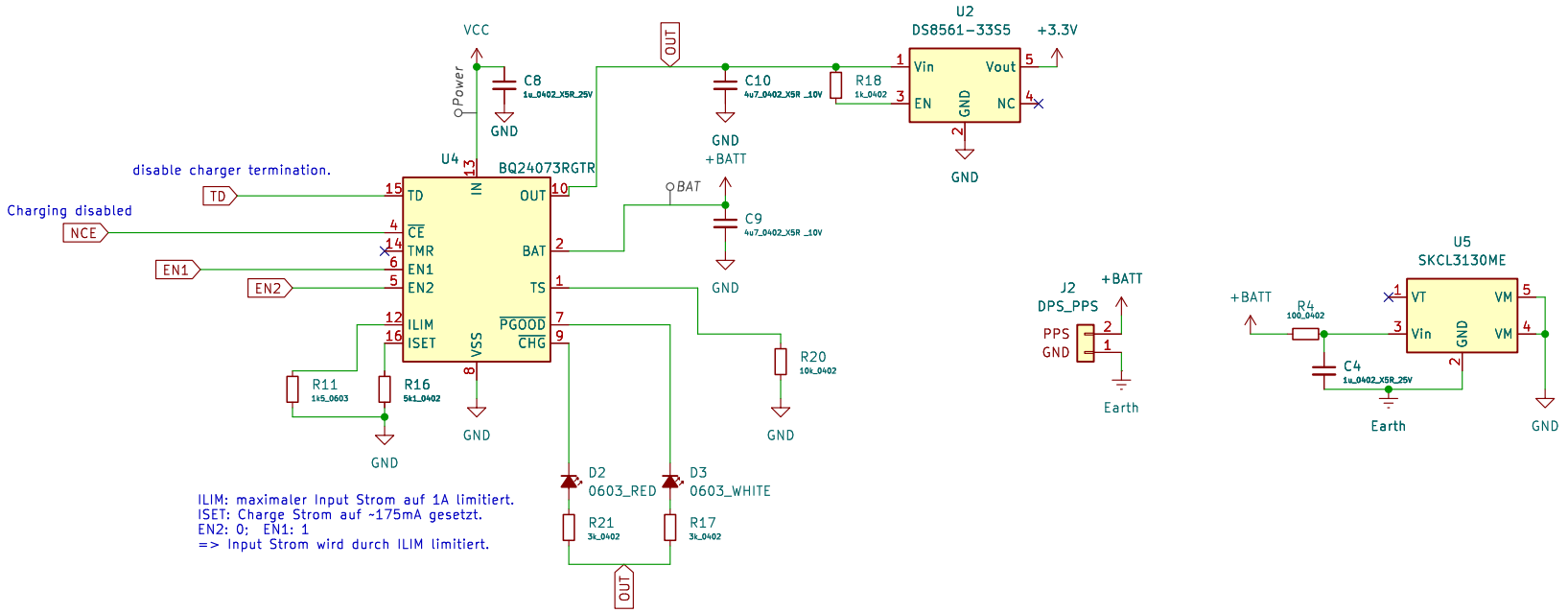

Sheet: /charger/
File: charger.kicad_sch

Title: Charger-LDO

Size: A4	Date: 2024-06-25	Rev: V2
KiCad E.D.A. 8.0.3		Id: 2/2