NO.	DESCRIPTION	PART NO.	QTY	MATERIAL	DRW NO.	REMARKS
1	INSULATOR		1	LCP		UL94-V0
2	CONTACT		6	PHOS-BRONZE		CONT. AREA:Au TAIL:Sn-Cu
3	CD CONTACT UPPER		1	PHOS-BRONZE		CONT. AREA:Au TAIL:Sn-Cu
4	CD CONTACT LOWER		1	PHOS-BRONZE		CONT. AREA:Au TAIL:Sn-Cu
5	SHELL		1	SUS		ALL OVER:NI TAIL:Au
6	COIL SPRING		1	SUS		
7	EJECT BAR		1	LCP		
8	CAM BAR		1	SUS		UL94-V0

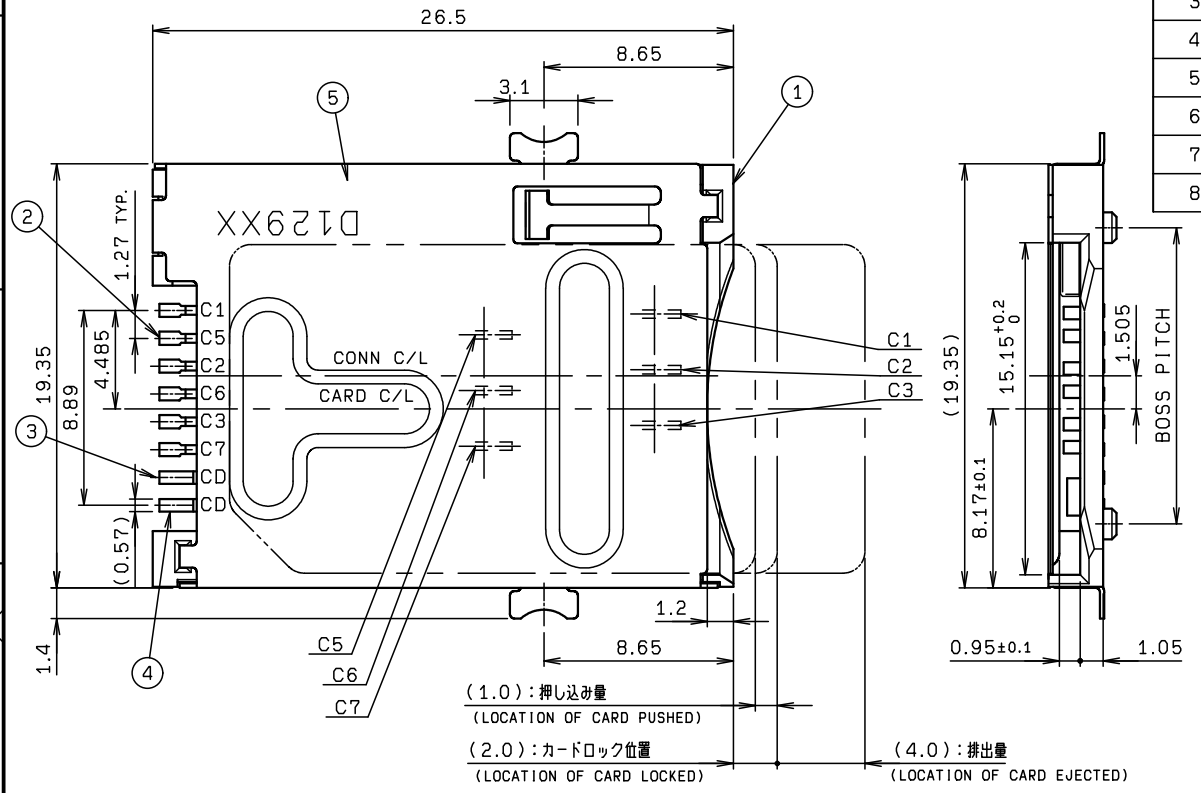

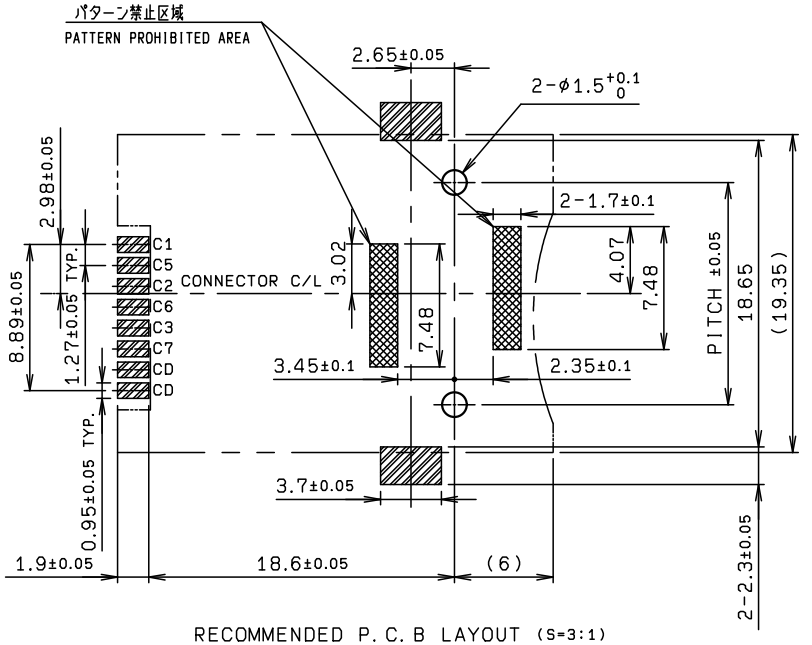

RECOMMENDED P.C.B LAYOUT (S=3:1)

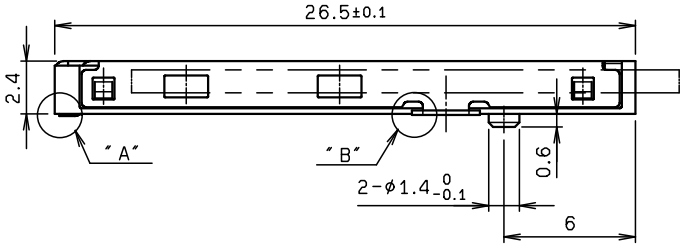

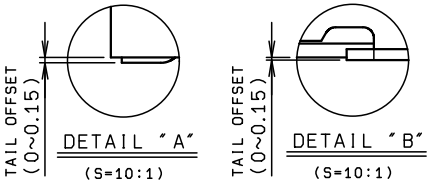

RoHS規制対応
COMPLIANT WITH
RoHS REGULATIONS

注 記
NOTE

1. テールコプラナリティー:0.1MAX.
   COPLANARITY:0.1MAX.
2. 回路構成
   CIRCUIT

WITHOUT CARD　　CARD INSERTED

3. LOT. NO.
   D129XX
   - 製造場所コード PRODUCT PLACE NO.
   - 日 DAY
   - 月 MONTH (1~9, X, Y, Z)
   - 年 YEAR (A.D. 2000~:A, B, C~J, K; 2010~:0, 1, 2~8, 9; 2020~:A, B, C~J, K)

※この注記は1ページ目にのみ適用
※THIS NOTES IS APPLICABLED TO SHEET-1 ONLY.

E	DCN-866	2017/09/05			
D	DCN-1009	2008/12/25	A. SATO		H. SADATOKU
O	EDN-780	2004/07/13	A. SATO	Y. SHIROYAMA	N. HAYASHI
NO.	EDN/DCN	DATE	ISSUE	CHECKED	APPROVED

TOLERANCE / 一般公差(S)
X <10 ±0.2
10≦ X <30 ±0.25
30≦ X ±0.3
ANGLE / 角度 ±3°

PRODUCT SPEC / 製品規格

UNIT: mm　ANGLE: 3RD
SCALE: 4 : 1　DATE: 2004/07/13

PART NAME / 品名
SERIES 5036
SIM CONNECTOR ASSY SMT

DRAWN	DESIGNED	CHECKED	APPROVED
LI	A. SATO	Y. SHIROYAMA	N. HAYASHI

PART NO. / 型番
04 5036 006 XXX 862 +

KYOCERA　KYOCERA Corporation

DWG NO. / 図番
BJS 5036012

SHEET 1/2　REV E