Understanding the Computational Capabilities of Real DRAM Chips and Robustness Issues They Introduce

İsmail Emir Yüksel

23.03.2026

MCCSys@ASPLOS'26

SAFARI

ETH zürich

Brief Self Introduction

- **Ismail Emir Yuksel**
  - Researcher @ SAFARI Research Group since September 2022
    - PhD @ ETH Zurich (Feb 2024 – ongoing)
  - ismail.yuksel@safari.ethz.ch

- **Research interests:**
  - Computer architecture
  - Processing-in-Memory (specifically Processing-using-DRAM)
  - DRAM Safety, Security and Reliability
  - Hardware security, safety, reliability, performance, availability, fairness, energy efficiency
  - …

This Talk's Focus

HPCA 2024

Functionally-Complete Boolean Logic in Real DRAM Chips: Experimental Characterization and Analysis

İsmail Emir Yüksel Yahya Can Tuğrul Ataberk Olgun F. Nisa Bostancı A. Giray Yağlıkçı
Geraldo F. Oliveira Haocong Luo Juan Gómez-Luna Mohammad Sadrosadati Onur Mutlu

ETH Zürich

DSN 2024

Simultaneous Many-Row Activation in Off-the-Shelf DRAM Chips: Experimental Characterization and Analysis

İsmail Emir Yüksel[1] Yahya Can Tuğrul[1,2] F. Nisa Bostancı[1] Geraldo F. Oliveira[1]
A. Giray Yağlıkçı[1] Ataberk Olgun[1] Melina Soysal[1] Haocong Luo[1]
Juan Gómez-Luna[1] Mohammad Sadrosadati[1] Onur Mutlu[1]
[1]*ETH Zürich* [2]*TOBB University of Economics and Technology*

ISCA 2025

PuDHammer: Experimental Analysis of Read Disturbance Effects of Processing-using-DRAM in Real DRAM Chips

İsmail Emir Yüksel Akash Sood Ataberk Olgun Oğuzhan Canpolat Haocong Luo
F. Nisa Bostancı Mohammad Sadrosadati A. Giray Yağlıkçı Onur Mutlu

ETH Zürich

Functionally-Complete Boolean Logic in Real DRAM Chips

Experimental Characterization and Analysis

Ismail Emir Yüksel

Yahya C. Tugrul Ataberk Olgun F. Nisa Bostancı

A. Giray Yaglıkçı Geraldo F. Oliveira Haocong Luo

Juan Gómez–Luna Mohammad Sadr Onur Mutlu

SAFARI

ETH zürich

Executive Summary

Motivation: Processing-using-DRAM can alleviate the performance and energy bottlenecks caused by **data movement**

- **Prior works** show that **existing DRAM chips** can perform **three-input majority** and **two-input AND and OR** operations

Problem: Proof-of-concept demonstrations on **commercial off-the-shelf (COTS)** DRAM chips do not provide

- **functionally-complete** operations (e.g., NAND or NOR)
- **NOT operation**
- **AND** and **OR** operations with **more than two inputs**

Experimental Study: 256 DDR4 chips from **two major manufacturers**

Key Results:

- COTS DRAM chips can perform **NOT** and **{2, 4, 8, 16}-input AND, NAND, OR, and NOR** operations with **very high reliability (>94% success rate)**
- **Data pattern** and **temperature** only slightly affect the reliability of these operations **(<1.98% decrease in success rate)**

DRAM Organization

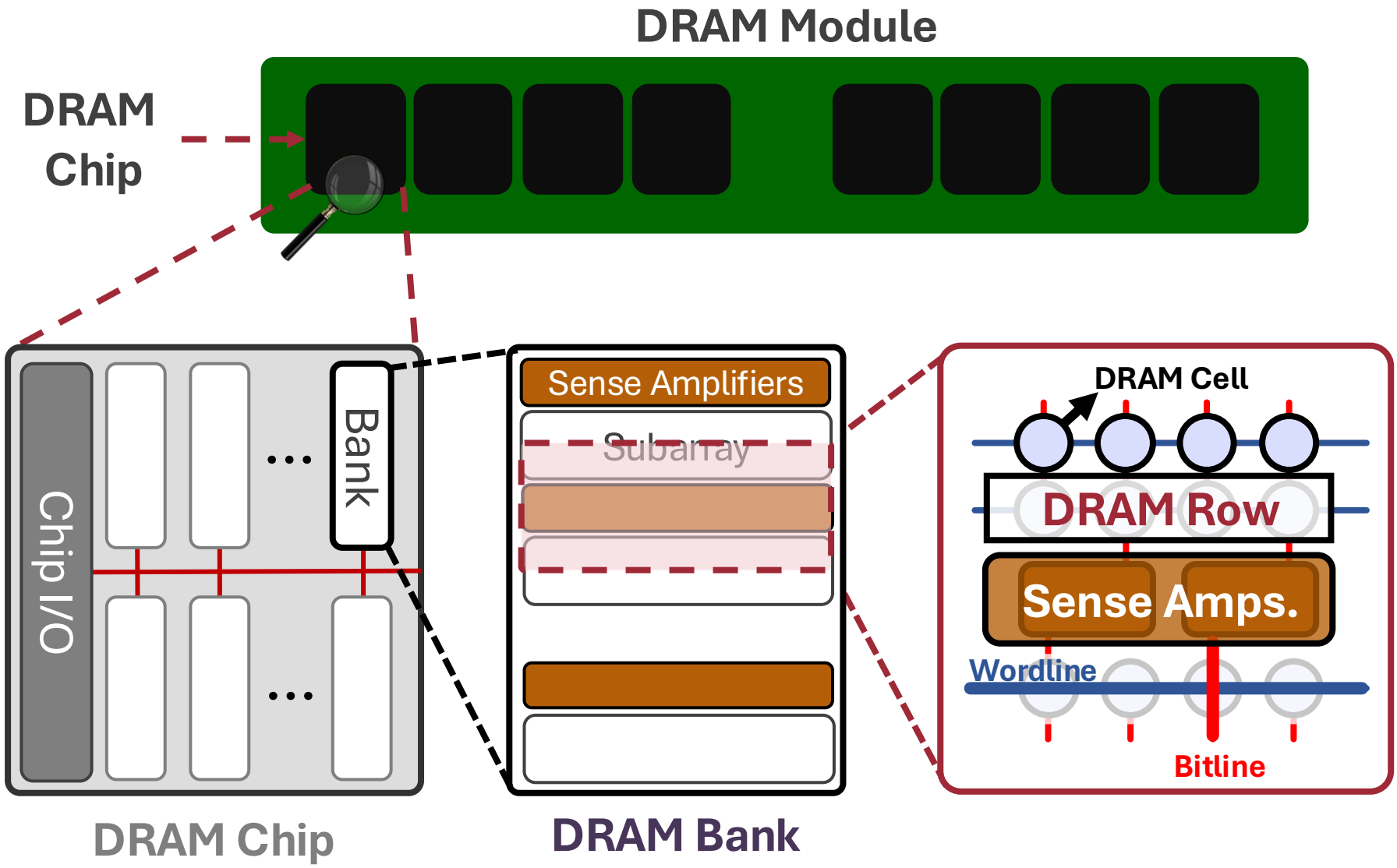

DRAM Open Bitline Architecture

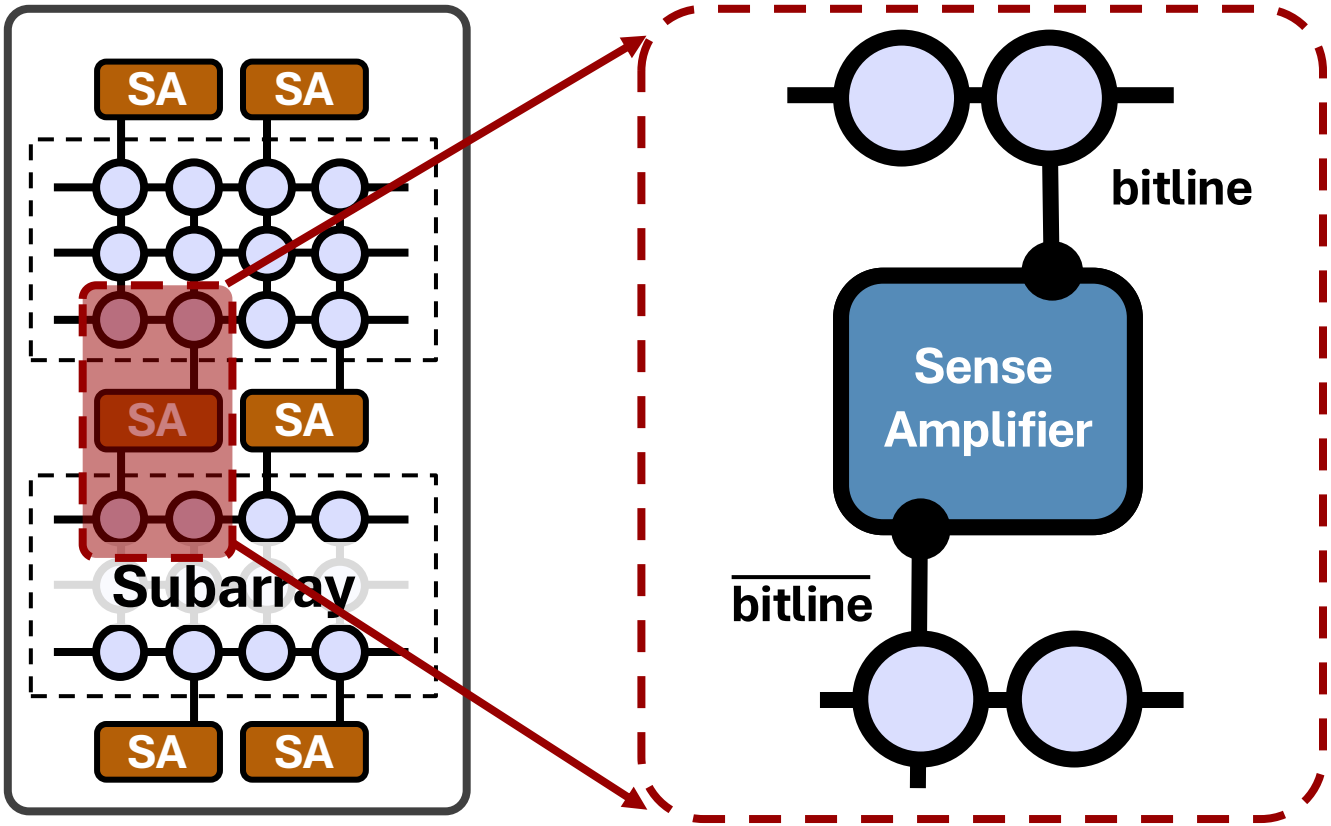

DRAM Bank

DRAM Open Bitline Architecture

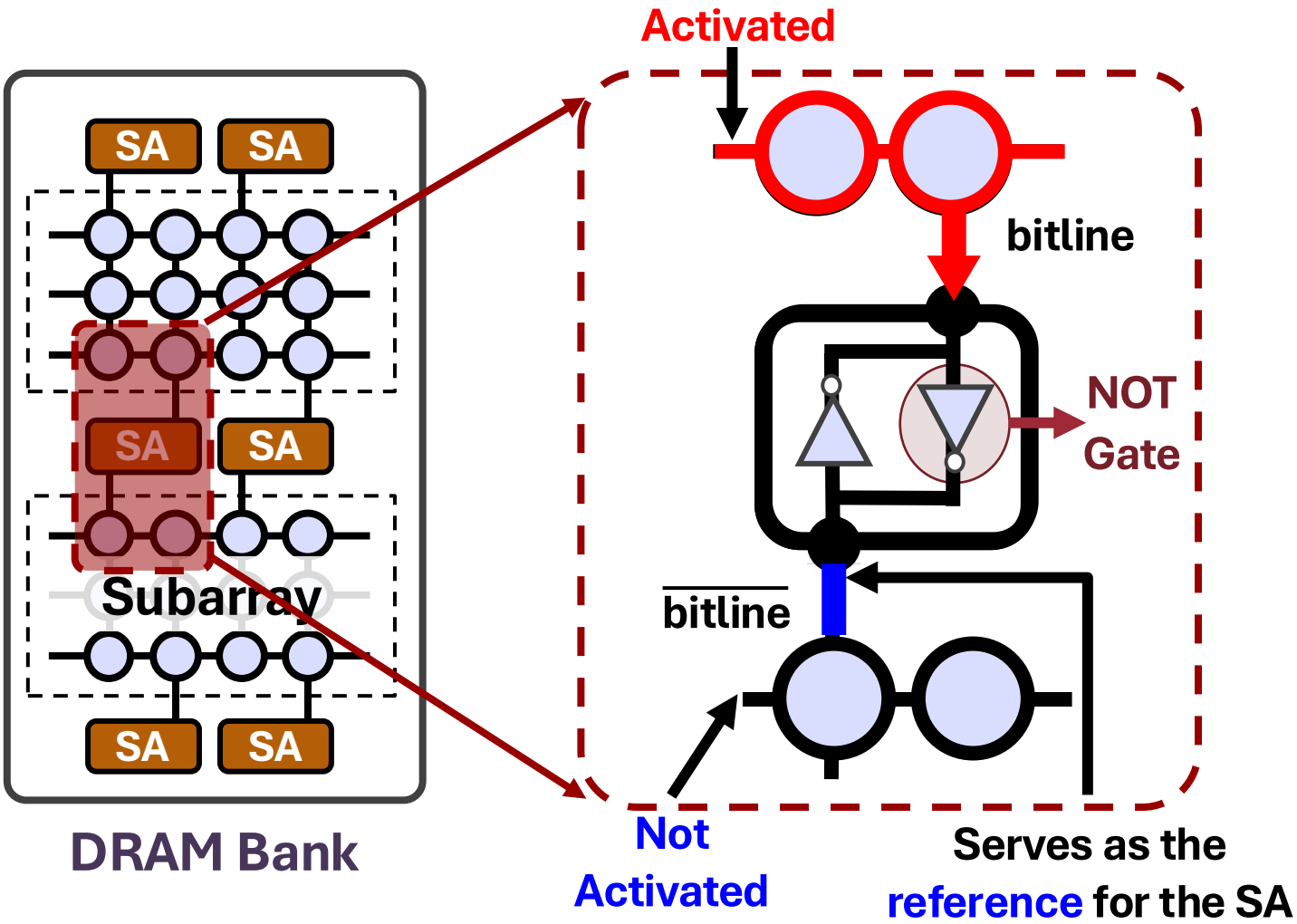

DRAM Operation

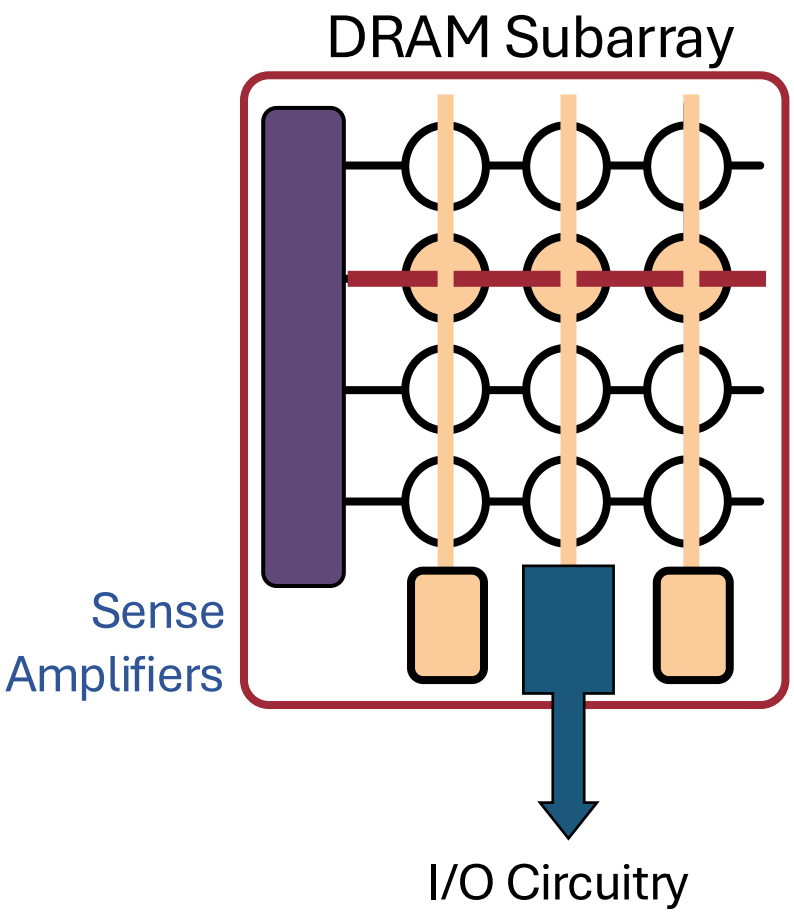

1 **ACTIVATE (ACT):**
Fetch the row's content into the **sense amplifiers**

2 **Column Access (RD/WR):**
Read/Write the target column and drive to I/O

3 **PRECHARGE (PRE):**
Prepare the bank for a new ACTIVATE

The Capability of COTS DRAM Chips

We **demonstrate** that **COTS DRAM chips:**

1 Can **simultaneously activate** up to **48 rows** in **two neighboring subarrays**

2 Can perform **NOT operation** with up to **32 output operands**

3 Can perform up to **16-input AND, NAND, OR, and NOR** operations

DRAM Testing Infrastructure

- Developed from DRAM Bender [Olgun+, TCAD'23]*
- Fine-grained control over DRAM commands, timings, and temperature

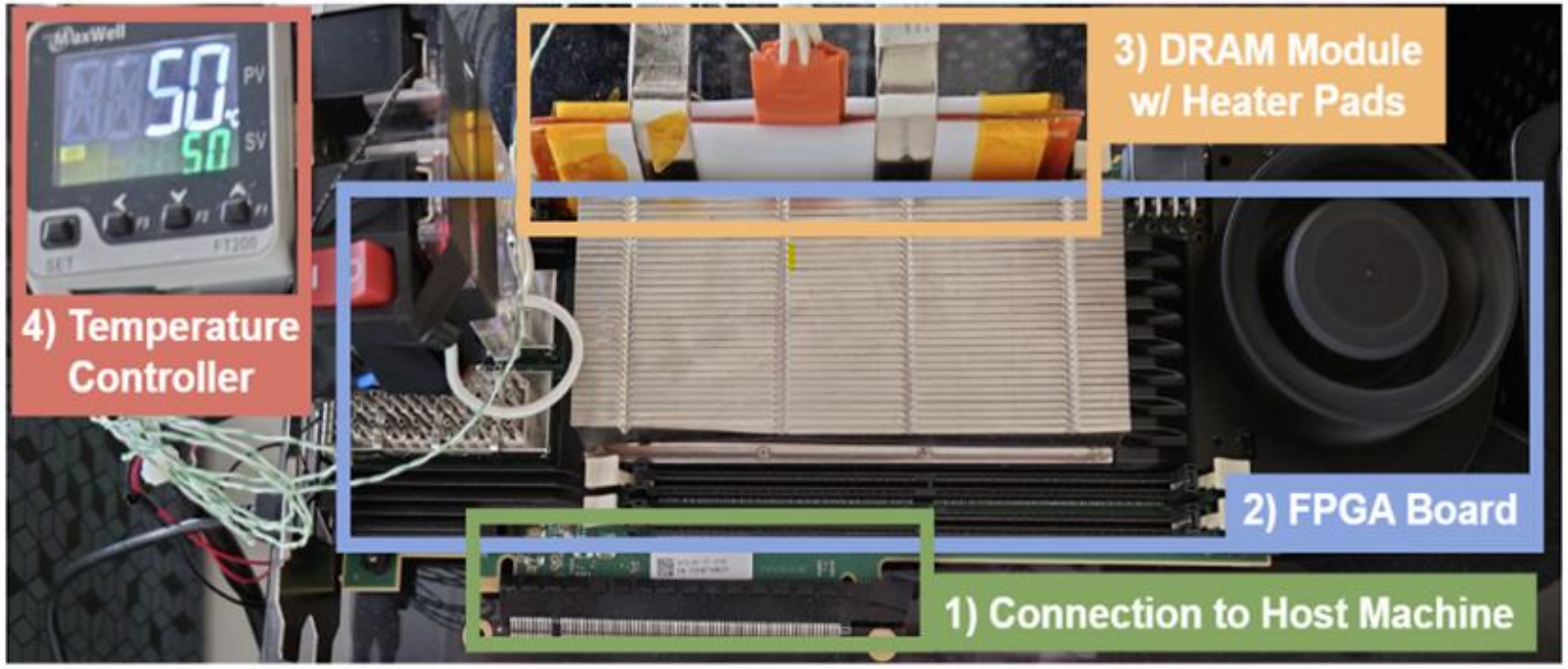

*Olgun et al., "DRAM Bender: An Extensible and Versatile FPGA-based Infrastructure to Easily Test State-of-the-art DRAM Chips," TCAD, 2023.

Laboratory for Understanding Memory

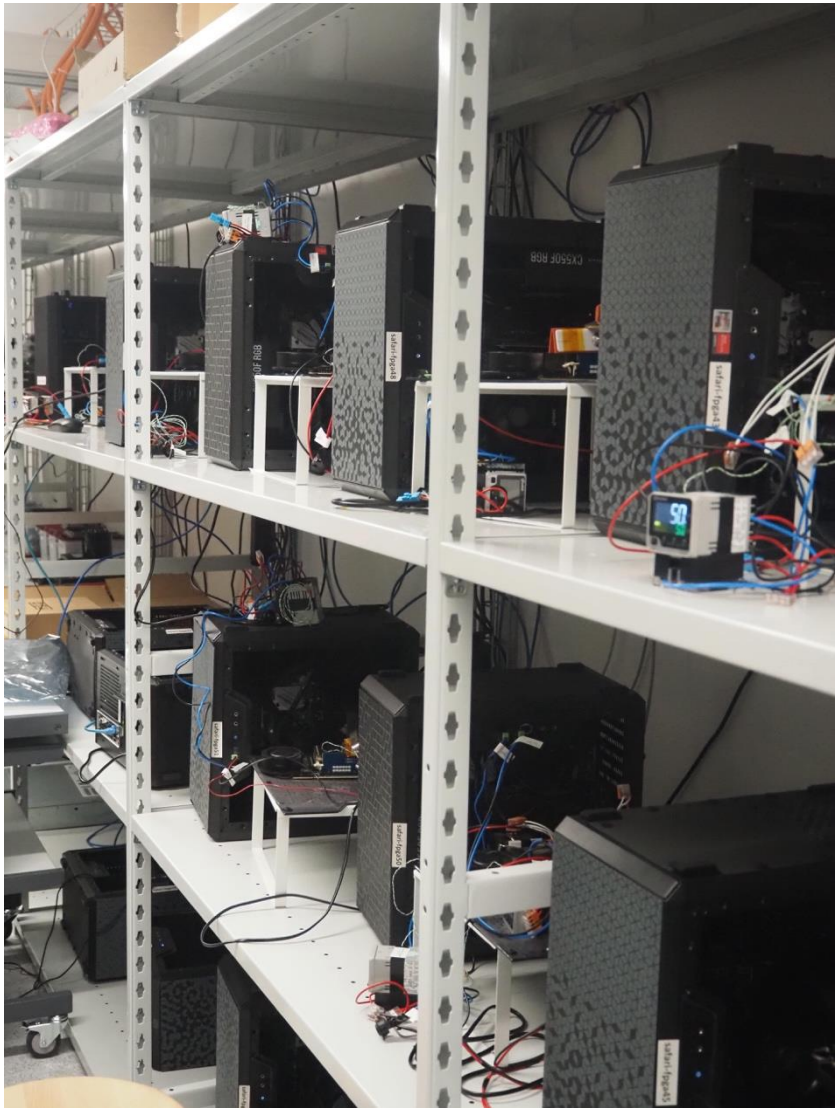

Laboratory for Understanding Memory

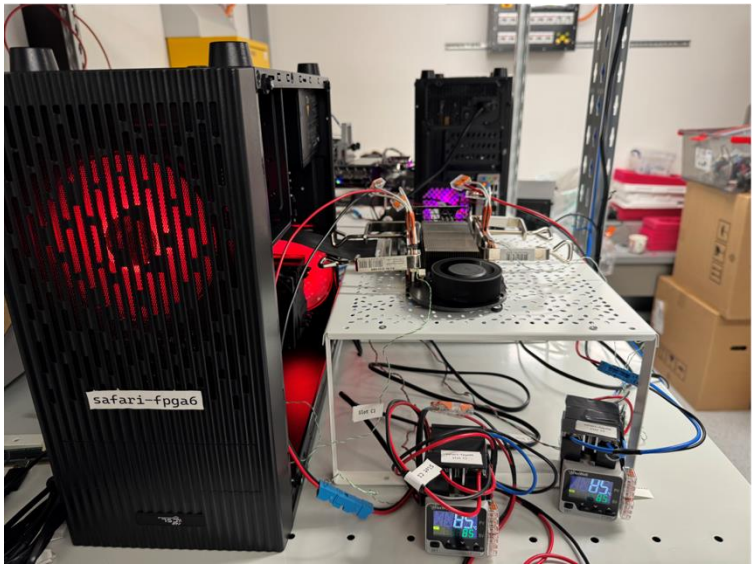

DRAM Chips Tested

- 256 DDR4 chips from two major DRAM manufacturers
- Covers different die revisions and chip densities

Chip Mfr.	#Modules (#Chips)	Die Rev.	Mfr. Date[a]	Chip Density	Chip Org.	Speed Rate
SK Hynix	9 (72)	M	N/A	4Gb	x8	2666MT/s
	5 (40)	A	N/A	4Gb	x8	2133MT/s
	1 (16)	A	N/A	8Gb	x8	2666MT/s
	1 (32)	A	18-14	4Gb	x4	2400MT/s
	1 (32)	A	16-49	8Gb	x4	2400MT/s
	1 (32)	M	16-22	8Gb	x4	2666MT/s
Samsung	1 (8)	F	21-02	4Gb	x8	2666MT/s
	2 (16)	D	21-10	8Gb	x8	2133MT/s
	1 (8)	A	22-12	8Gb	x8	3200MT/s

The Capability of COTS DRAM Chips

We **demonstrate** that **COTS DRAM chips:**

1. Can **simultaneously activate** up to **48 rows** in **two neighboring subarrays**
2. Can perform **NOT operation** with up to **32 output operands**
3. Can perform up to **16-input AND, NAND, OR, and NOR** operations

Key Observation

Activating two rows in **quick succession** can **simultaneously** activate **multiple rows in neighboring subarrays**

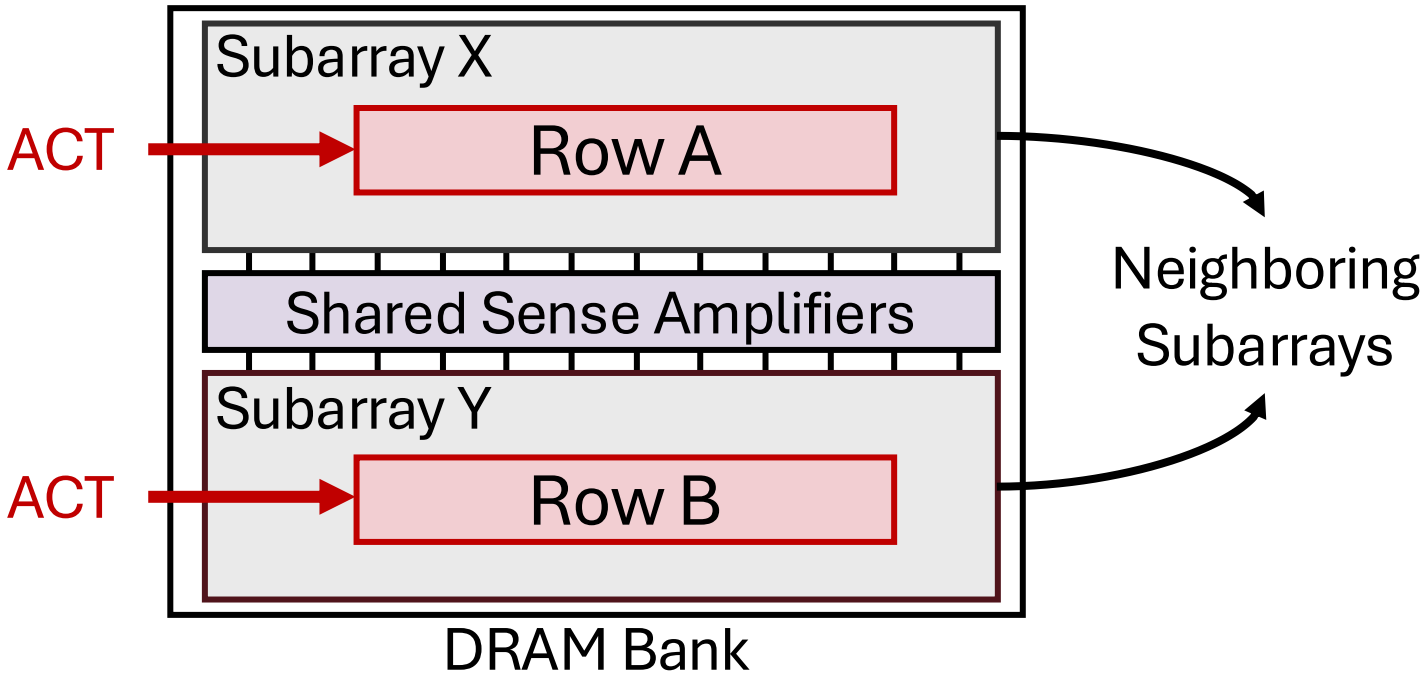

The Capability of COTS DRAM Chips

We **demonstrate** that **COTS DRAM chips:**

1 Can **simultaneously activate** up to **48 rows** in **two neighboring subarrays**

2 Can perform **NOT operation** with up to **32 output operands**

3 Can perform up to **16-input AND, NAND, OR, and NOR** operations

Key Idea

Connect rows in neighboring subarrays
through **a NOT gate** by simultaneously activating rows

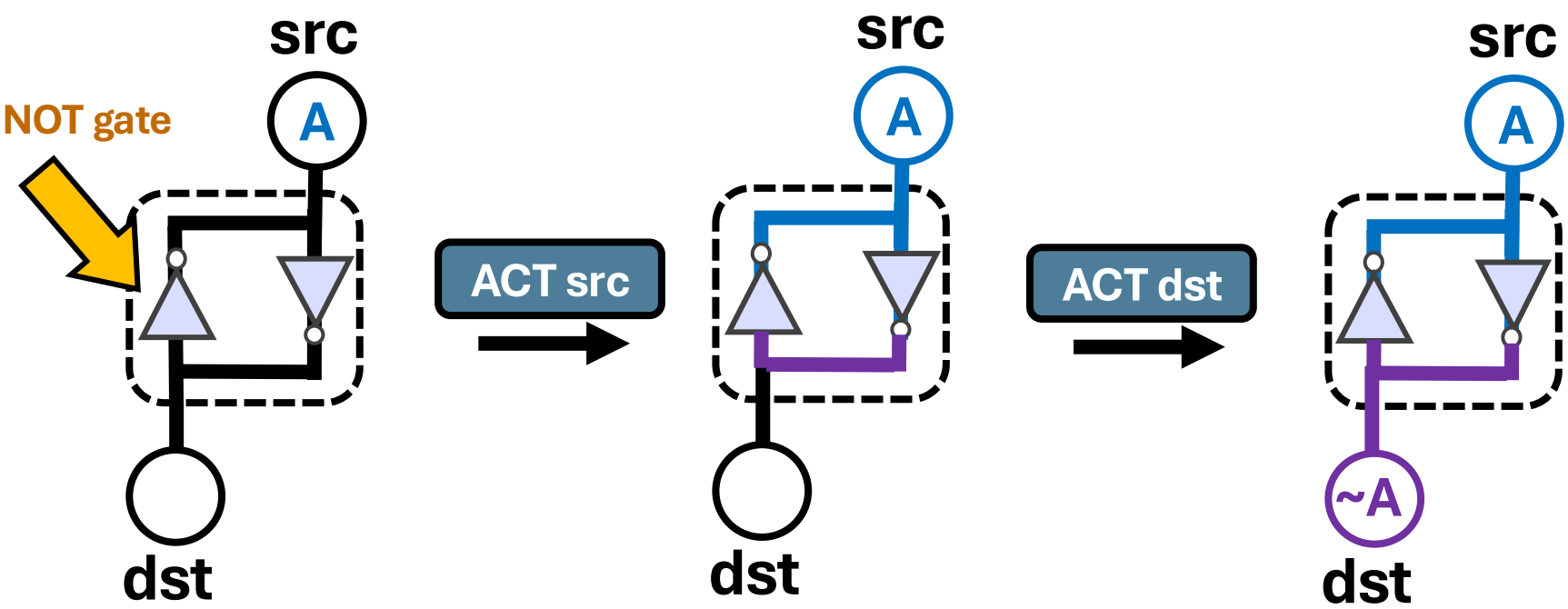

NOT Operation: A Walkthrough

ACT src

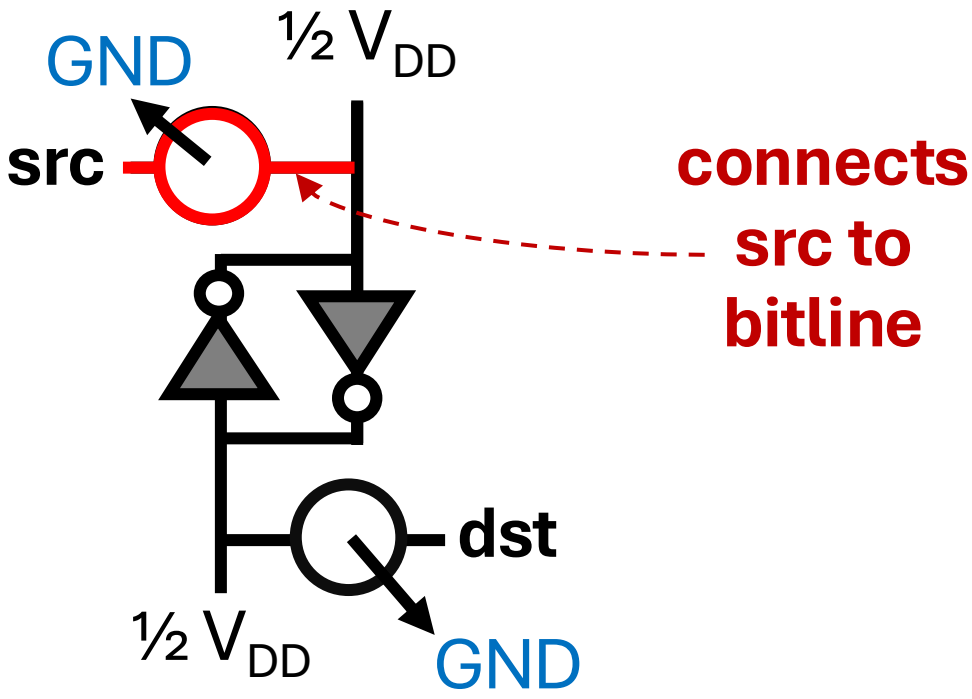

NOT Operation: A Walkthrough

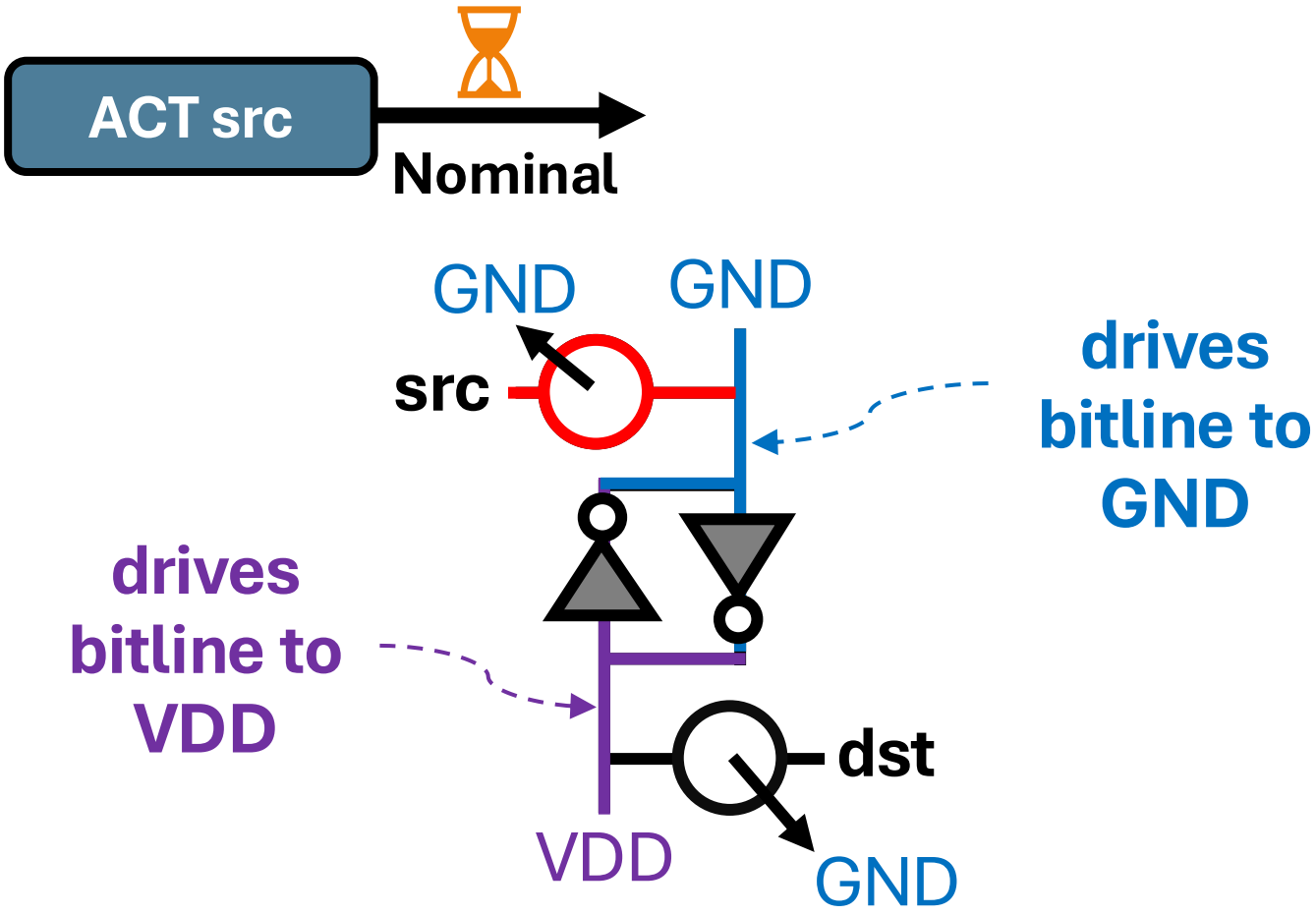

NOT Operation: A Walkthrough

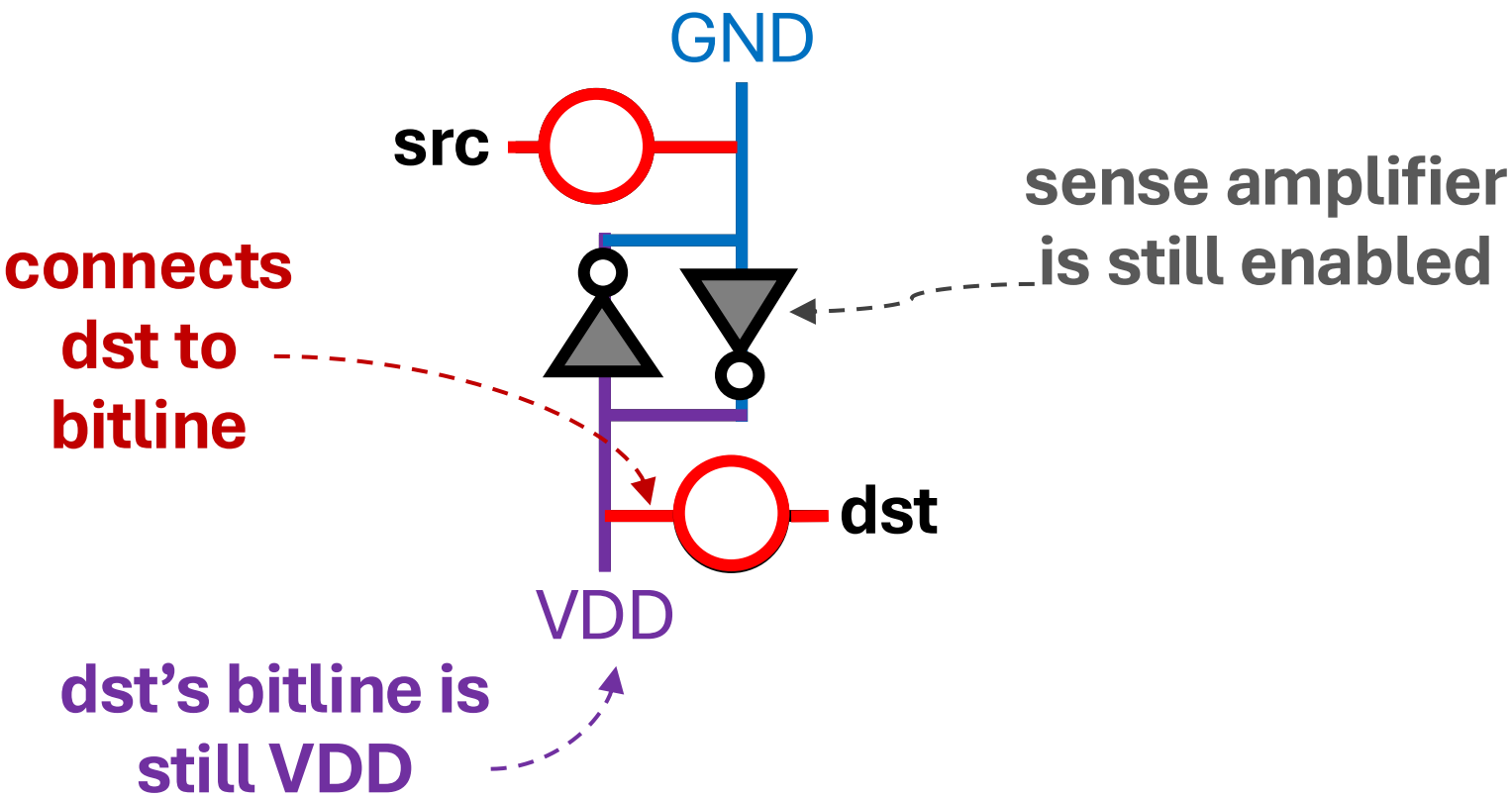

NOT Operation: A Walkthrough

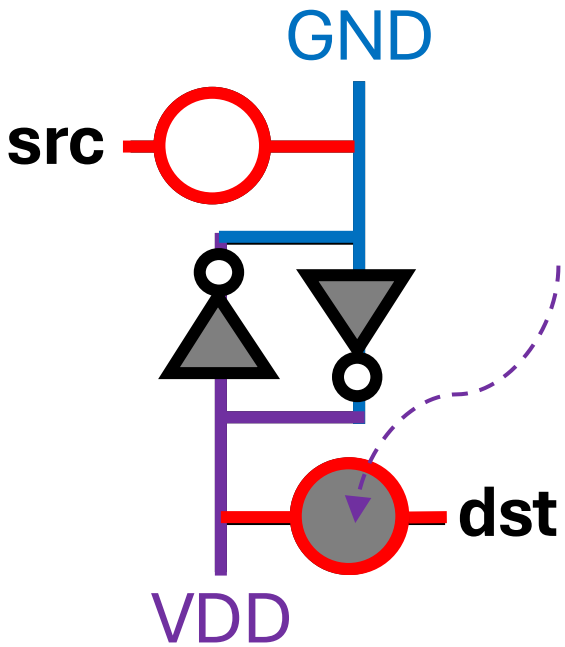

negated value of src (VDD) is written to dst

Reliability Metric

Success Rate (for a DRAM cell)

Percentage of trials where the **correct output** of a tested operation is stored in the cell

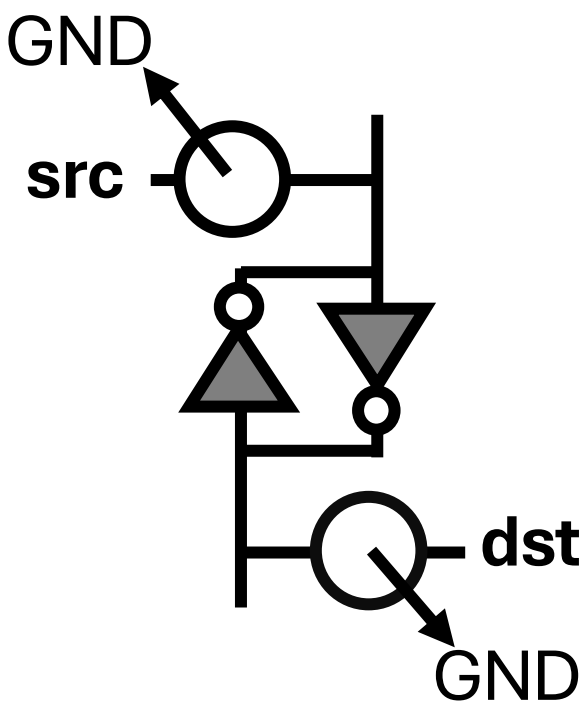

Total of 10000 trials

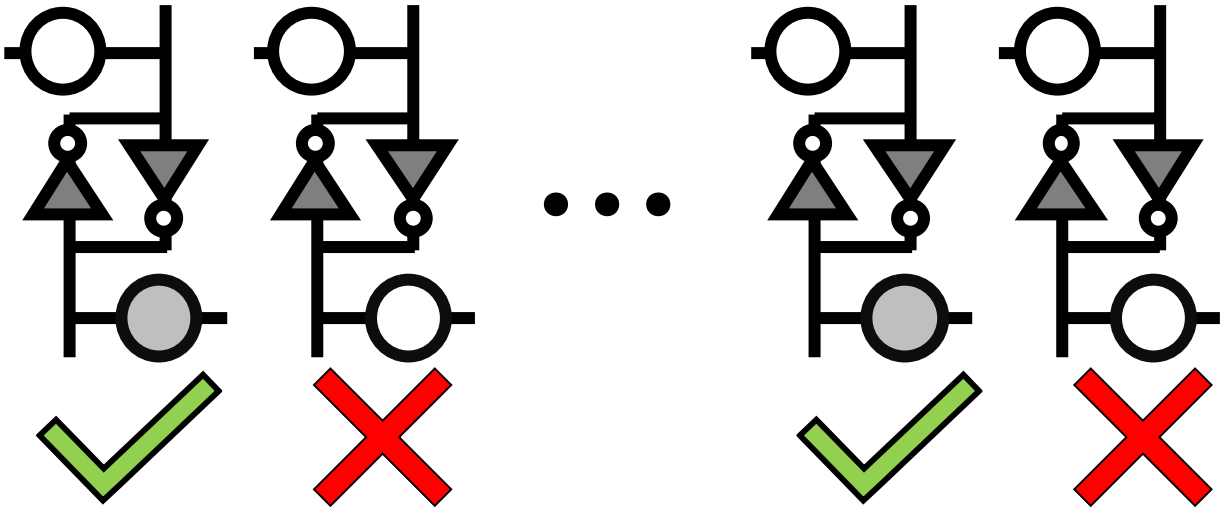

Success rate for this cell: 50%

Key Takeaways from In-DRAM NOT Operation

Key Takeaway 1
COTS DRAM chips can perform NOT operations with up to 32 destination rows

Key Takeaway 2
Temperature has a small effect on the reliability of NOT operations

Performing NOT in COTS DRAM Chips

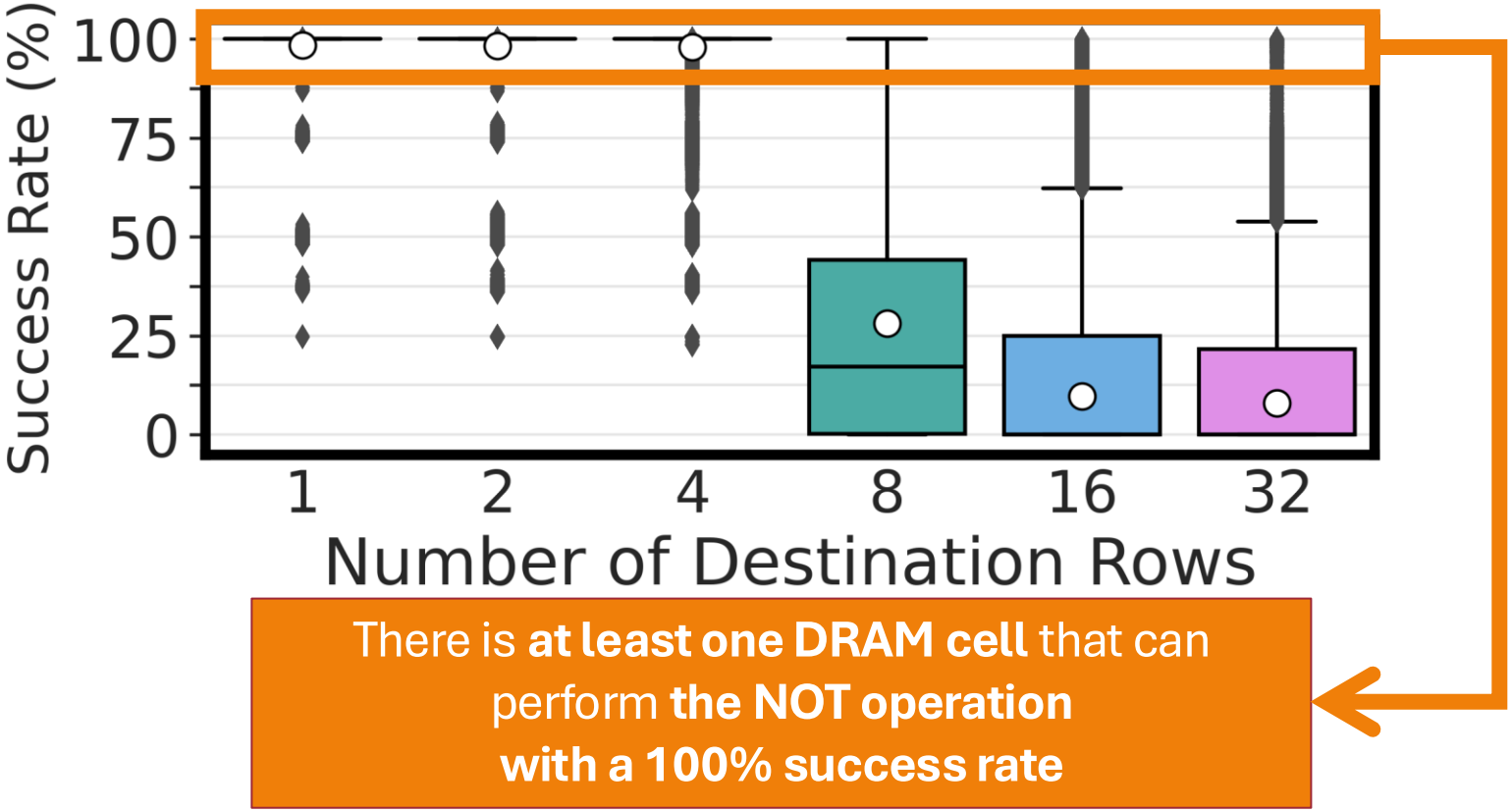

COTS DRAM chips can perform NOT operations with up to 32 destination rows

The Capability of COTS DRAM Chips

We **demonstrate** that **COTS DRAM chips:**

1 Can **simultaneously activate** up to **48 rows** in **two neighboring subarrays**

2 Can perform **NOT operation** with up to **32 output operands**

3 Can perform up to **16-input AND, NAND, OR, and NOR** operations

Key Idea

Manipulate the bitline voltage to express **a wide variety of functions** using multiple-row activation in neighboring subarrays

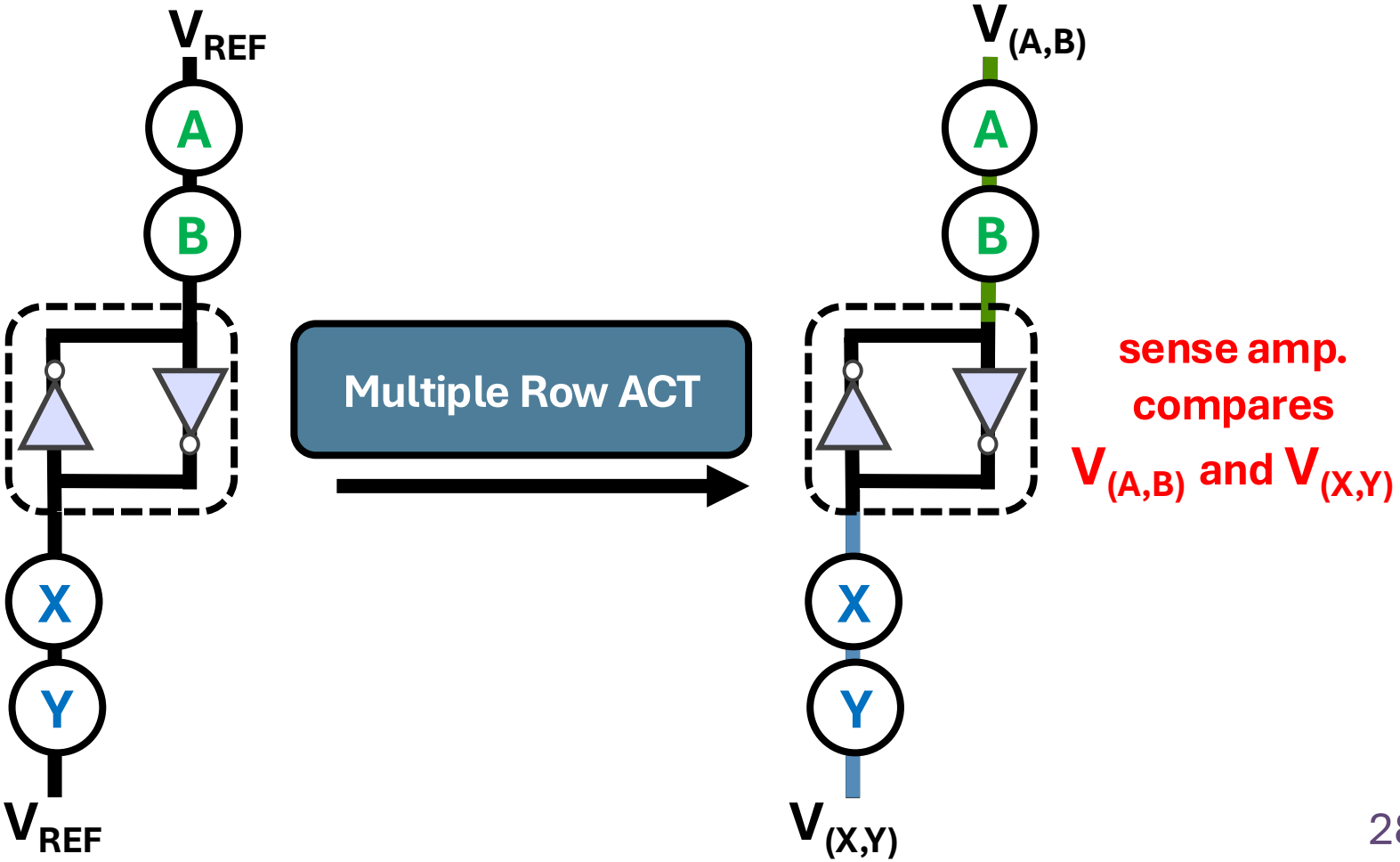

Two-Input AND and NAND Operations

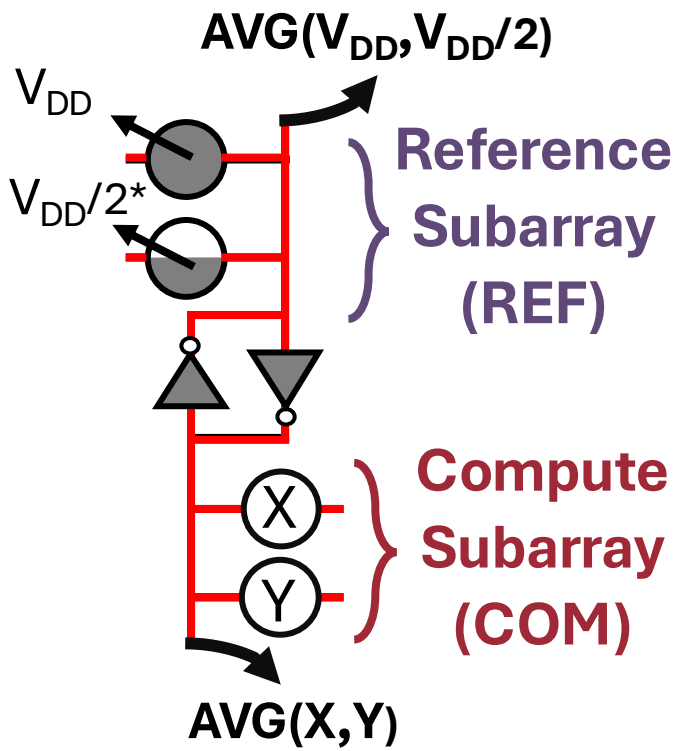

*Gao et al., "FracDRAM: Fractional Values in Off-the-Shelf DRAM," in MICRO, 2022.

Two-Input AND and NAND Operations

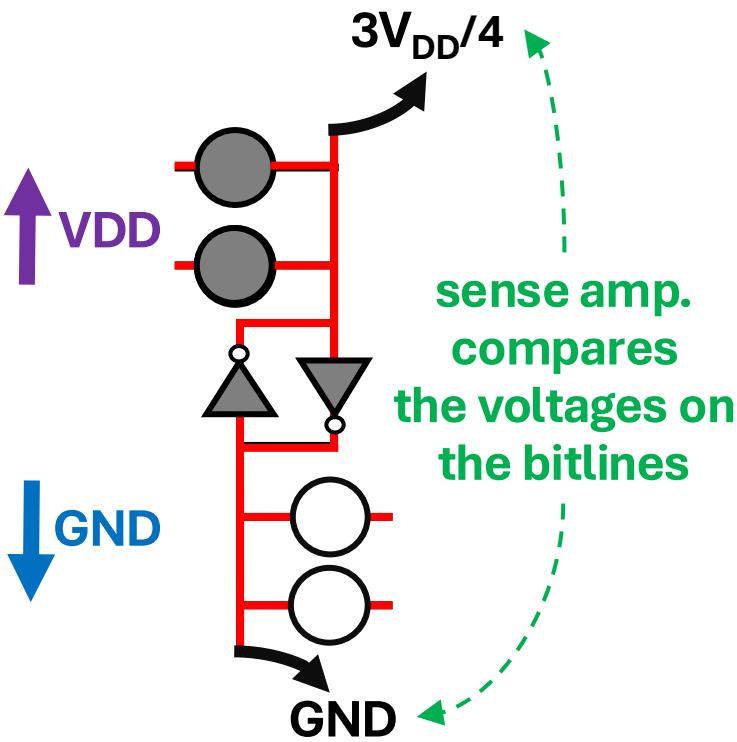

V_{DD}=1 & GND = 0

X	Y	COM	REF
0	0	0	1

Two-Input AND and NAND Operations

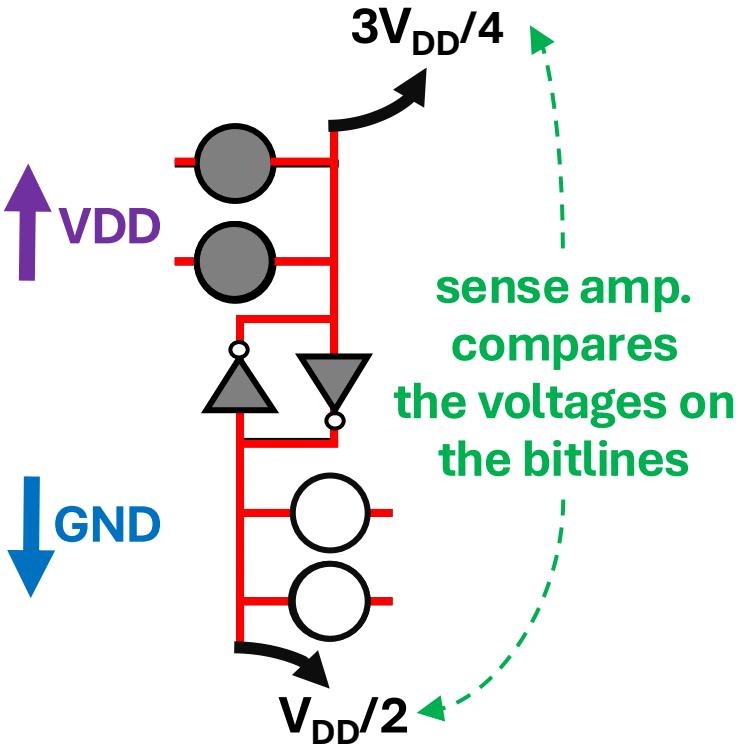

V_{DD}=1 & GND = 0

X	Y	COM	REF
0	0	0	1
0	1	0	1

Two-Input AND and NAND Operations

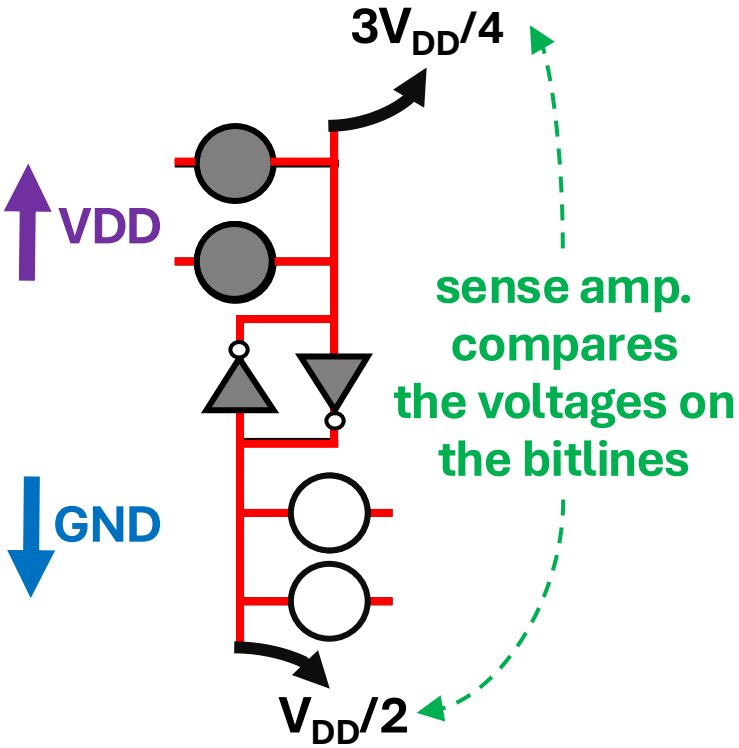

V_{DD}=1 & GND = 0

X	Y	COM	REF
0	0	0	1
0	1	0	1
1	0	0	1

Two-Input AND and NAND Operations

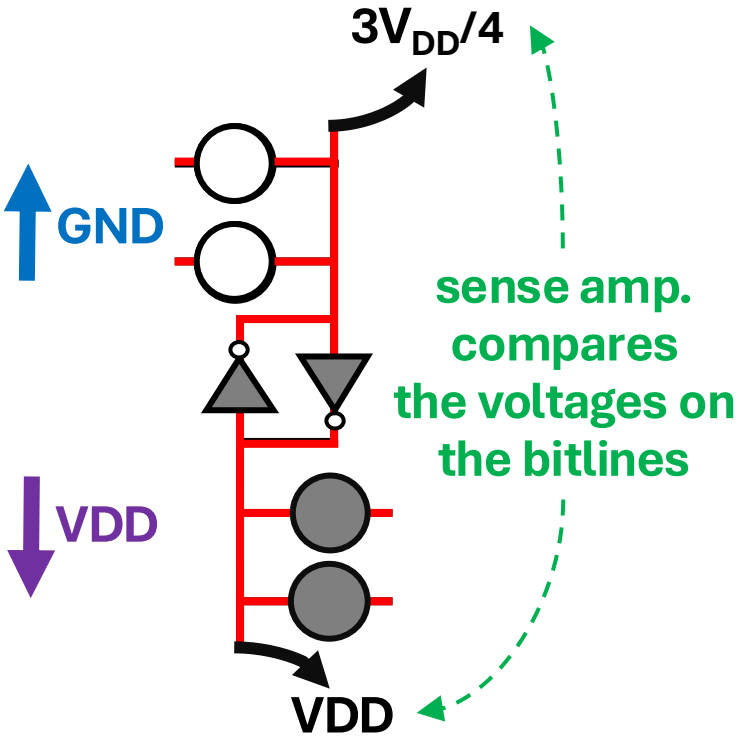

V_{DD}=1 & GND = 0

X	Y	COM	REF
0	0	0	1
0	1	0	1
1	0	0	1
1	1	1	0

Two-Input AND and NAND Operations

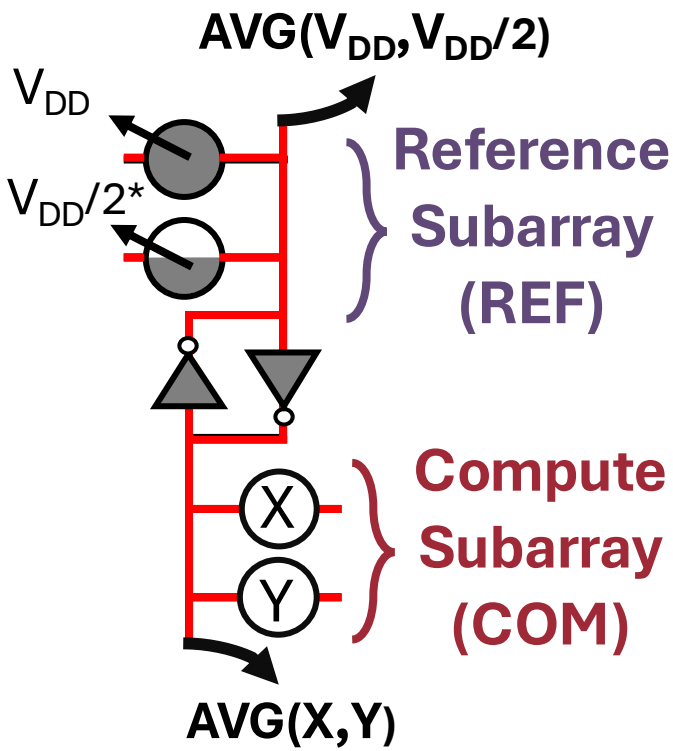

V_{DD}=1 & GND = 0

X	Y	COM	REF
0	0	0	1
0	1	0	1
1	0	0	1
1	1	1	0
		AND	NAND

*Gao et al., "FracDRAM: Fractional Values in Off-the-Shelf DRAM," in MICRO, 2022.

Key Takeaways from In-DRAM Operations

Key Takeaway 1

COTS DRAM chips can perform
{2, 4, 8, 16}-input AND, NAND, OR, and NOR operations

Key Takeaway 2

COTS DRAM chips can perform
AND, NAND, OR, and NOR operations
with very high reliability

Key Takeaway 3

Data pattern slightly affects
the reliability of AND, NAND, OR, and NOR operations

Performing AND, NAND, OR, and NOR

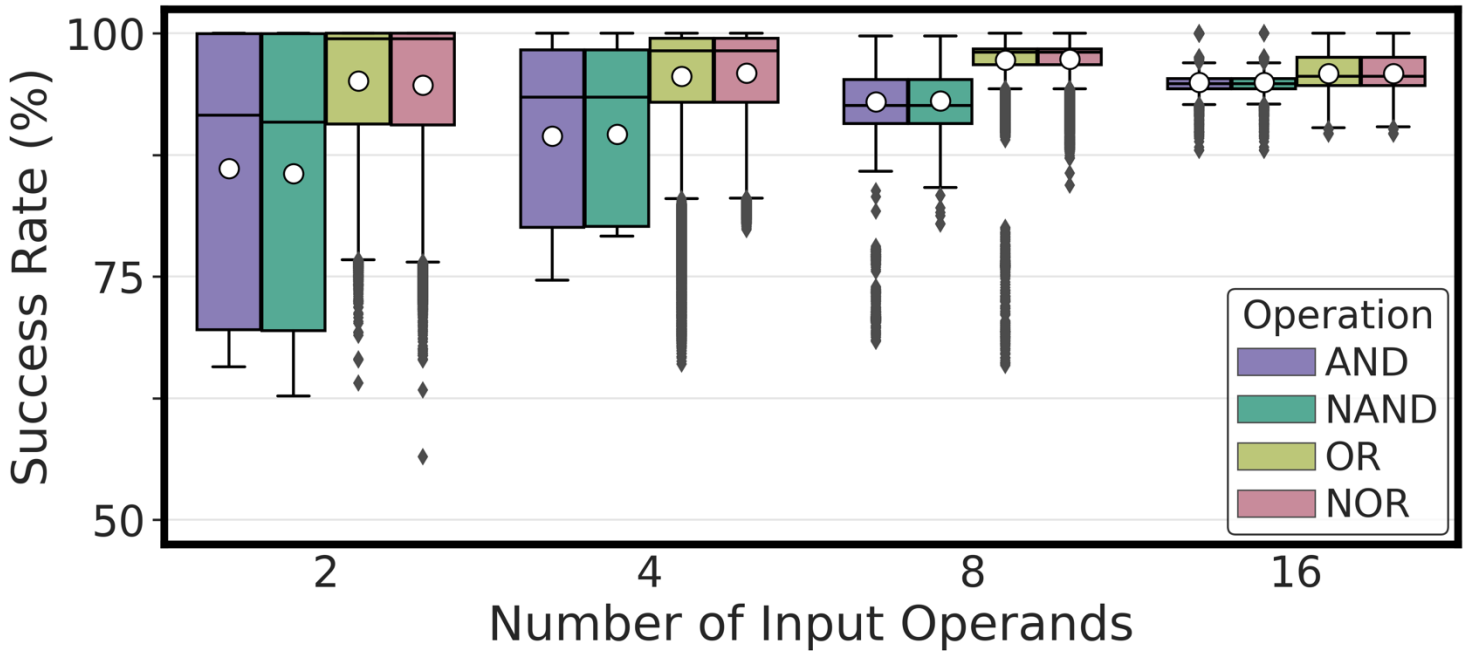

COTS DRAM chips can perform {2, 4, 8, 16}-input AND, NAND, OR, and NOR operations

Performing AND, NAND, OR, and NOR

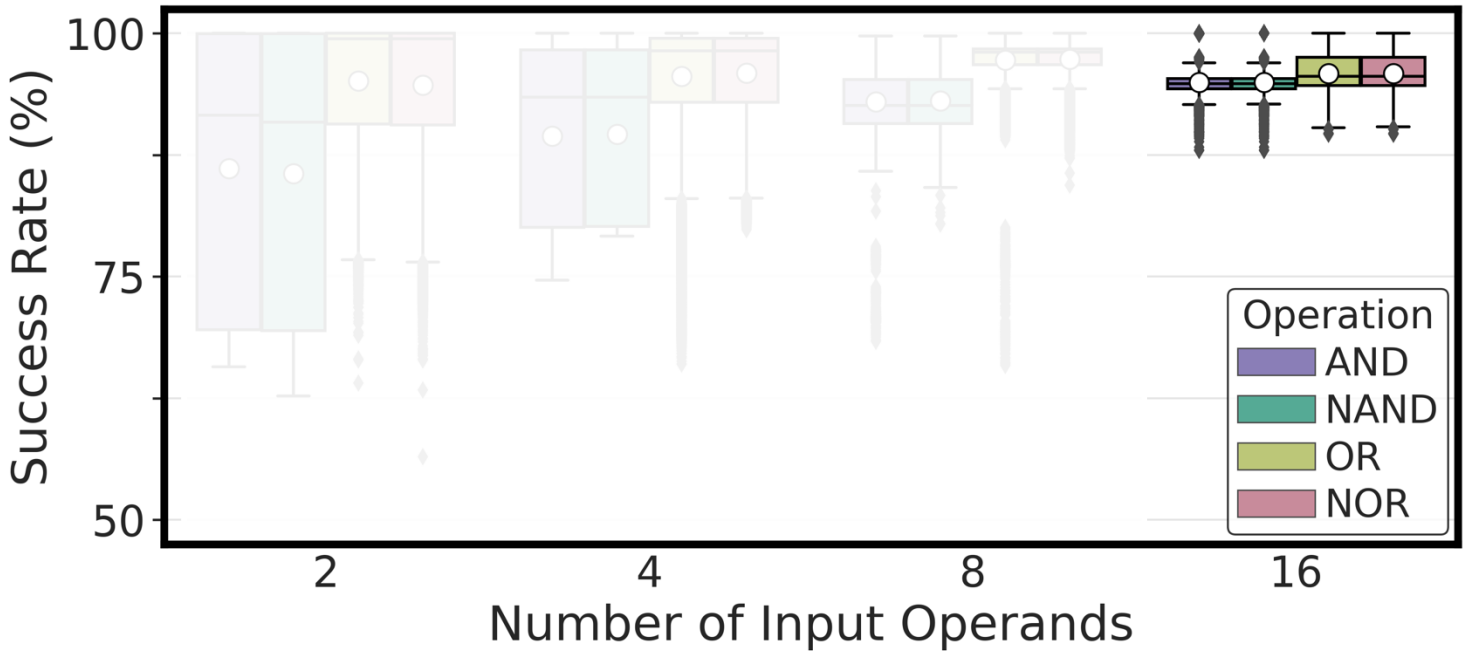

COTS DRAM chips can perform 16-input AND, NAND, OR, and NOR operations with very high success rate (>94%)

Available on arXiv

Functionally-Complete Boolean Logic in Real DRAM Chips: Experimental Characterization and Analysis

İsmail Emir Yüksel Yahya Can Tuğrul Ataberk Olgun F. Nisa Bostancı A. Giray Yağlıkçı
Geraldo F. Oliveira Haocong Luo Juan Gómez-Luna Mohammad Sadrosadati Onur Mutlu

ETH Zürich

Processing-using-DRAM (PuD) is an emerging paradigm that leverages the analog operational properties of DRAM circuitry to enable massively parallel in-DRAM computation. PuD has the potential to significantly reduce or eliminate costly data movement between processing elements and main memory. A common approach for PuD architectures is to make use of bulk bitwise computation (e.g., AND, OR, NOT). Prior works experimentally demonstrate three-input MAJ (i.e., MAJ3) and two-input AND and OR operations in commercial off-the-shelf (COTS) DRAM chips. Yet, demonstrations on COTS DRAM chips do not *provide a functionally complete set of operations (e.g., NAND or AND and NOT).*

We experimentally demonstrate that COTS DRAM chips are capable of performing 1) functionally-complete *Boolean operations: NOT, NAND, and NOR and 2) many-input (i.e., more than two-input) AND and OR operations. We present an extensive*

systems and applications [12, 13]. Processing-using-DRAM (PuD) [29–32] is a promising paradigm that can alleviate the data movement bottleneck. PuD uses the analog operational properties of the DRAM circuitry to enable massively parallel in-DRAM computation. Many prior works [29–53] demonstrate that PuD can greatly reduce or eliminate data movement.

A widely used approach for PuD is to perform bulk bitwise operations, i.e., bitwise operations on large bit vectors. To perform bulk bitwise operations using DRAM, prior works propose modifications to the DRAM circuitry [29–31, 33, 35, 36, 43, 44, 46, 48–58]. Recent works [38, 41, 42, 45] experimentally demonstrate the feasibility of executing data copy & initialization [42, 45], i.e., the RowClone operation [49], and a subset of bitwise operations, i.e., three-input bitwise majority (MAJ3) and two-input AND and OR operations in unmodified commercial off-the-shelf (COTS) DRAM chips by operating beyond

https://arxiv.org/pdf/2402.18736.pdf

FCDRAM is Open Source

CMU-SAFARI / FCDRAM

Type / to search

Code | Issues | Pull requests | Agents | Actions | Projects | Security | Insights | Settings

FCDRAM Public

Edit Pins | Watch 4 | Fork 2 | Starred 14

main | 1 Branch | 0 Tags | Go to file t | Add file | Code

unrealismail update readme & add license — e23e62b · 2 years ago — 2 Commits

DRAM-Bender	initial commit	2 years ago
analysis	initial commit	2 years ago
experimental_data	initial commit	2 years ago
LICENSE	update readme & add license	2 years ago
README.md	update readme & add license	2 years ago

README | License

Functionally-Complete Boolean Logic in Real DRAM Chips: Experimental Characterization and Analysis

Origin Academic Code | Made with C/C++ | License MIT | Contributions welcome | cs.AR 2402.18736

This repository source code of our HPCA'24 paper.

About

Source code & scripts for experimental characterization and demonstration of performing NOT and up to 16-input AND, NAND, OR, and NOR operations in real DDR4 DRAM chips. Described in our HPCA'24 paper by Yuksel et al. at https://arxiv.org/abs/2402.18736

dram-characterization
processing-in-memory
processing-using-dram

Readme
View license
Activity
Custom properties
14 stars
4 watching
2 forks
Report repository

https://github.com/CMU-SAFARI/FCDRAM

Functionally-Complete Boolean Logic in Real DRAM Chips

Experimental Characterization and Analysis

Ismail Emir Yüksel

Yahya C. Tugrul Ataberk Olgun F. Nisa Bostancı

A. Giray Yaglıkçı Geraldo F. Oliveira Haocong Luo

Juan Gómez–Luna Mohammad Sadr Onur Mutlu

SAFARI

ETH zürich

Simultaneous Many-Row Activation in Off-the-Shelf DRAM Chips

Experimental Characterization and Analysis

İsmail Emir Yüksel

Yahya C. Tuğrul F. Nisa Bostancı Geraldo F. Oliveira

A. Giray Yağlıkçı Ataberk Olgun Melina Soysal Haocong Luo

Juan Gómez–Luna Mohammad Sadr Onur Mutlu

SAFARI

ETH zürich

Leveraging Simultaneous Many-Row Activation

1 Perform **MAJX (where X>3)** operations

2 **Increase the robustness** of MAJX operations

3 Copy **one row's content** to **multiple rows**

Leveraging Simultaneous Many-Row Activation

1 Perform **MAJX (where X>3)** operations

2 **Increase the robustness** of MAJX operations

3 Copy **one row's content** to **multiple rows**

In-DRAM Multiple Row Copy (Multi-RowCopy)

Simultaneously activate many rows to copy **one row's content** to **multiple destination rows**

RowClone

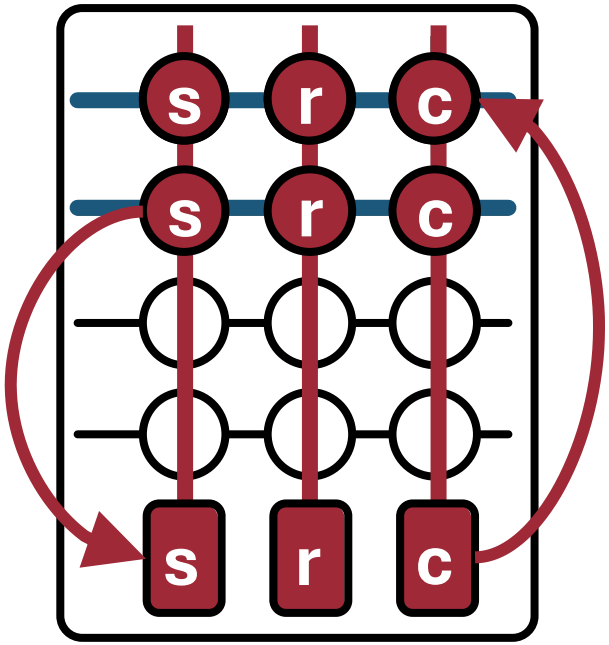

Multi-RowCopy

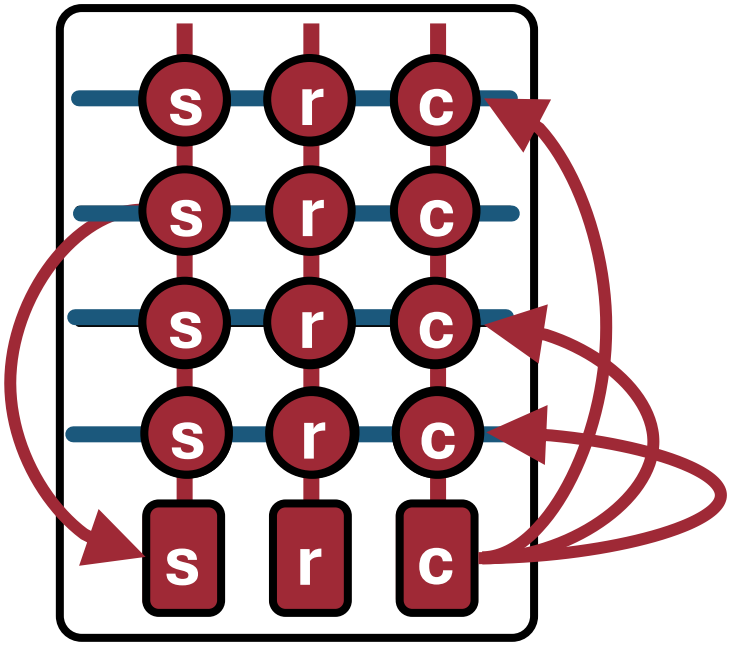

[Seshadri+ MICRO'13]

Robustness of Multi-RowCopy

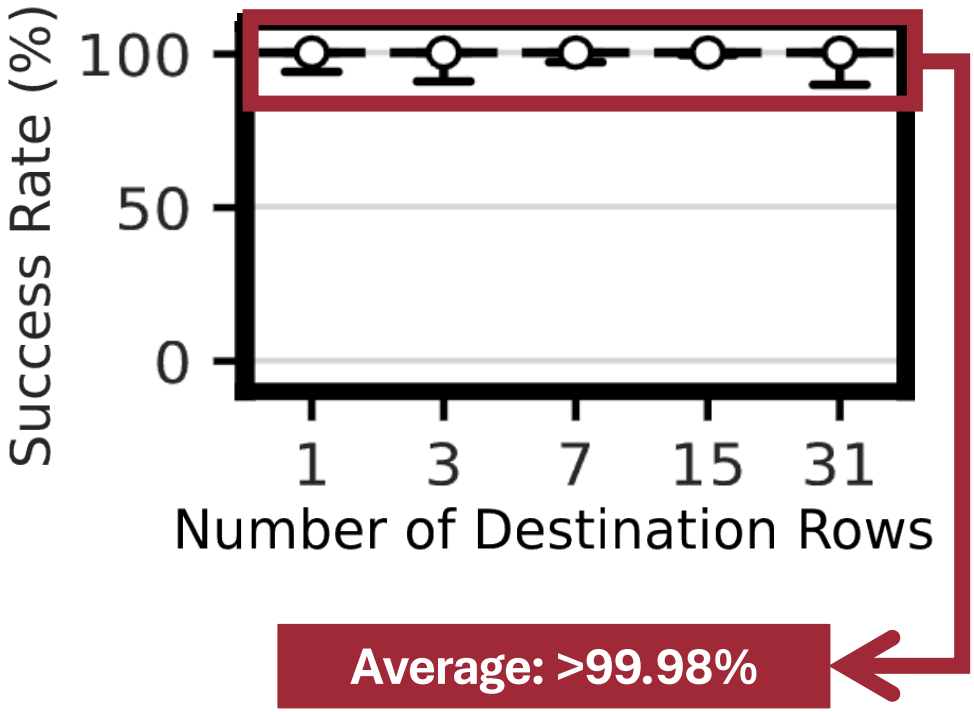

COTS DRAM chips can copy one row's content to up to 31 rows with a very high success rate

Available on arXiv

Code Reproducible Dataset Reproducible

Simultaneous Many-Row Activation in Off-the-Shelf DRAM Chips: Experimental Characterization and Analysis

İsmail Emir Yüksel[1] Yahya Can Tuğrul[1,2] F. Nisa Bostancı[1] Geraldo F. Oliveira[1]
A. Giray Yağlıkçı[1] Ataberk Olgun[1] Melina Soysal[1] Haocong Luo[1]
Juan Gómez-Luna[1] Mohammad Sadrosadati[1] Onur Mutlu[1]
[1]*ETH Zürich* [2]*TOBB University of Economics and Technology*

We experimentally analyze the computational capability of commercial off-the-shelf (COTS) DRAM chips and the robustness of these capabilities under various timing delays between DRAM commands, data patterns, temperature, and voltage levels. We extensively characterize 120 COTS DDR4 chips from two major manufacturers. We highlight four key results of our study. First, COTS DRAM chips are capable of 1) simultaneously activating up to 32 rows (i.e., simultaneous many-row activation), 2) executing a majority of X (`MAJX`) operation where X>3 (i.e., `MAJ5`, `MAJ7`, and `MAJ9` operations), and 3) copying a DRAM row (concurrently) to up to 31 other DRAM rows, which we call `Multi-RowCopy`. Second, storing multiple copies of `MAJX`'s input operands on all simultaneously activated rows drastically increases the success rate (i.e., the percentage of DRAM cells that correctly perform the computation) of the `MAJX` operation. For example, `MAJ3` with 32-row activation (i.e.,

A subset of PIM proposals devise mechanisms that enable PUM using DRAM cells for computation, including data copy and initialization [67, 72, 77, 78, 89, 104, 127], Boolean logic [56, 64–66, 68, 70, 72, 76, 79, 122, 127–129], majority-based arithmetic [64, 66, 69, 72, 91, 127, 130, 131], and lookup table based operations [82, 106, 107, 132]. We refer to DRAM-based PUM as *Processing-Using-DRAM (PUD)* and the computation performed using DRAM cells as PUD operations.

PUD benefits from the bulk data parallelism in DRAM devices to perform bulk bitwise PUD operations. Prior works show that bulk bitwise operations are used in a wide variety of important applications, including databases and web search [64, 67, 79, 130, 133–140], data analytics [64, 141–144], graph processing [56, 80, 94, 130, 145], genome analysis [60, 99, 146–149], cryptography [150, 151], set operations [56, 64], and hyper-dimensional computing [152–154].

https://arxiv.org/pdf/2405.06081

Our Work is Open Source and Artifact Evaluated

Code Reproducible

Dataset Reproducible

SiMRA-DRAM Public

Edit Pins | Watch 4 | Fork 0 | Starred 6

main | 1 Branch | 0 Tags | Go to file t | Add file | Code

unrealismail Update README.md a51abfa · last month 5 Commits

DRAM-Bender	initial comit	last month
analysis	initial comit	last month
experimental_data	initial comit	last month
LICENSE	initial comit	last month
README.md	Update README.md	last month

README License

Simultaneous Many-Row Activation in Off-the-Shelf DRAM Chips: Experimental Characterization and Analysis

About

Source code & scripts for experimental characterization and demonstration of 1) simultaneous many-row activation, 2) up to nine-input majority operations and 3) copying one row's content to up 31 rows in real DDR4 DRAM chips. Described in our DSN'24 paper by Yuksel et al. at https://arxiv.org/abs/2405.06081

Readme
View license
Activity
Custom properties
6 stars
4 watching
0 forks
Report repository

https://github.com/CMU-SAFARI/SiMRA-DRAM

Simultaneous Many-Row Activation in Off-the-Shelf DRAM Chips

Experimental Characterization and Analysis

Paper

GitHub

İsmail Emir Yüksel

Yahya C. Tuğrul F. Nisa Bostancı Geraldo F. Oliveira

A. Giray Yağlıkçı Ataberk Olgun Melina Soysal Haocong Luo

Juan Gómez–Luna Mohammad Sadr Onur Mutlu

SAFARI

ETH zürich

PuDHammer

Experimental Analysis of Read Disturbance Effects of Processing-using-DRAM in Real DRAM Chips

İsmail Emir Yüksel

Akash Sood Ataberk Olgun Oğuzhan Canpolat Haocong Luo

Nisa Bostancı Mohammad Sadrosadati Giray Yağlıkçı Onur Mutlu

SAFARI ETH zürich

Executive Summary

Motivation: Processing-using-DRAM (PuD) alleviates data movement bottlenecks

- DRAM can perform many PuD operations by activating multiple DRAM rows in quick succession or simultaneously (i.e., multiple-row activation)
- Modern DRAM is subject to read disturbance (e.g., RowHammer)
  - Repeatedly activating even a single row induces bitflips in unaccessed rows

Problem: No prior work studies the read disturbance effects of multiple-row activation

Goal: Understand and analyze read disturbance effects of multiple-row activation

Experimental Study: 316 COTS DDR4 chips from four major manufacturers to study read disturbance effects of multiple-row activation, which we call PuDHammer

- PuDHammer significantly exacerbates DRAM read disturbance, causing up to 158.58x reduction in min. hammer count to induce first bitflip
- PuDHammer bypasses in-DRAM RowHammer mitigation in DDR4 and induces 11340x more bitflips than RowHammer

Mitigation: We adapt Per Row Activation Counting (PRAC) for PuDHammer

- Adapted PRAC solution incurs an average system performance overhead of 48.26%

Simultaneous Multiple-Row Activation

Activating two rows in **quick succession** in **COTS** DRAM chips **simultaneously** activates **multiple rows** in a subarray

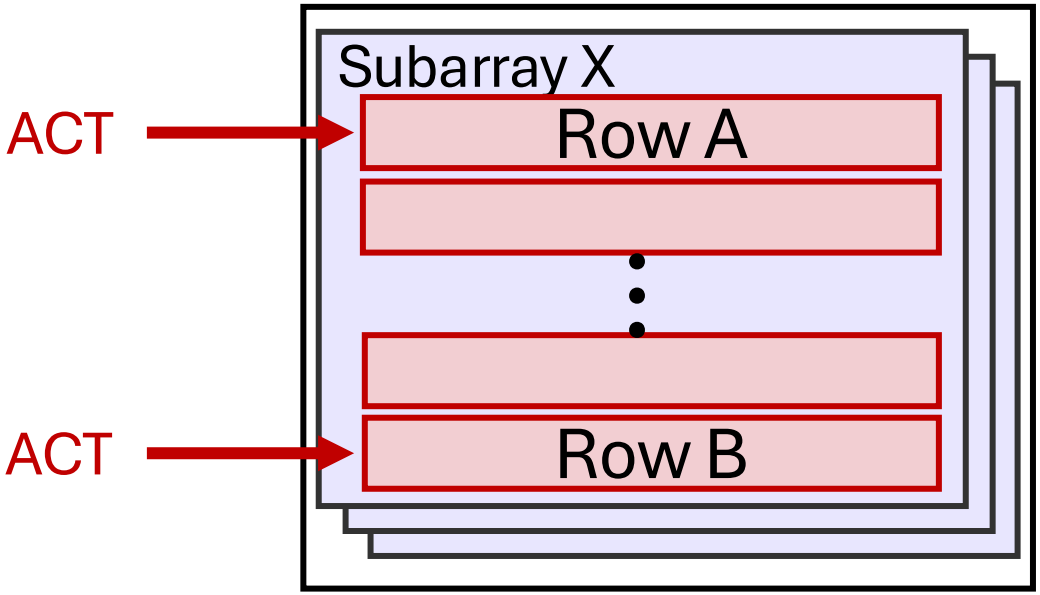

DRAM Bank

Read Disturbance in DRAM

- Unfortunately, even activating **a single DRAM row** **disturbs** the data integrity of other **unaccessed DRAM rows**
- Prominent example: **RowHammer**

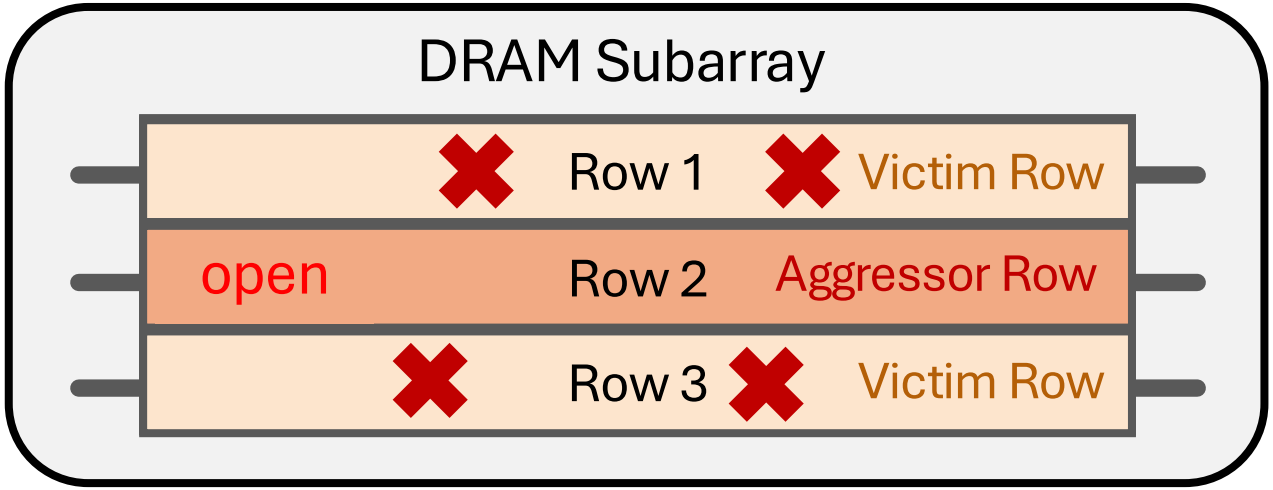

Repeatedly **opening (activating)** and **closing** a DRAM row **many times** causes **RowHammer bitflips** in adjacent rows

[Kim+, ISCA'14]

Problem & Goal

Problem

No prior work ***investigates*** *the* ***read disturbance effects of multiple-row activation***

Goal

Understand how ***multiple-row activation affects read disturbance vulnerability*** *in DRAM*

DRAM Chips Tested

- 316 DDR4 chips from four major DRAM manufacturers
- Covers different die revisions and chip densities

Chip Mfr.	#Modules	#Chips	Die Rev.	Density	Org.
SK Hynix	1	8	A	4Gb	x8
	8	64	A	8Gb	x8
	2	16	C	16Gb	x8
	6	48	D	8Gb	x8
Micron	1	8	B	4Gb	x8
	4	32	E	16Gb	x16
	4	32	F	16Gb	x8
	2	16	R	8Gb	x8
Samsung	1	8	A	16Gb	x8
	5	40	B	16Gb	x8
	1	4	C	4Gb	x16
	1	8	C	16Gb	x8
	1	8	E	4Gb	x8
Nanya	3	24	C	8Gb	x8

Double-Sided SiMRA vs. RowHammer

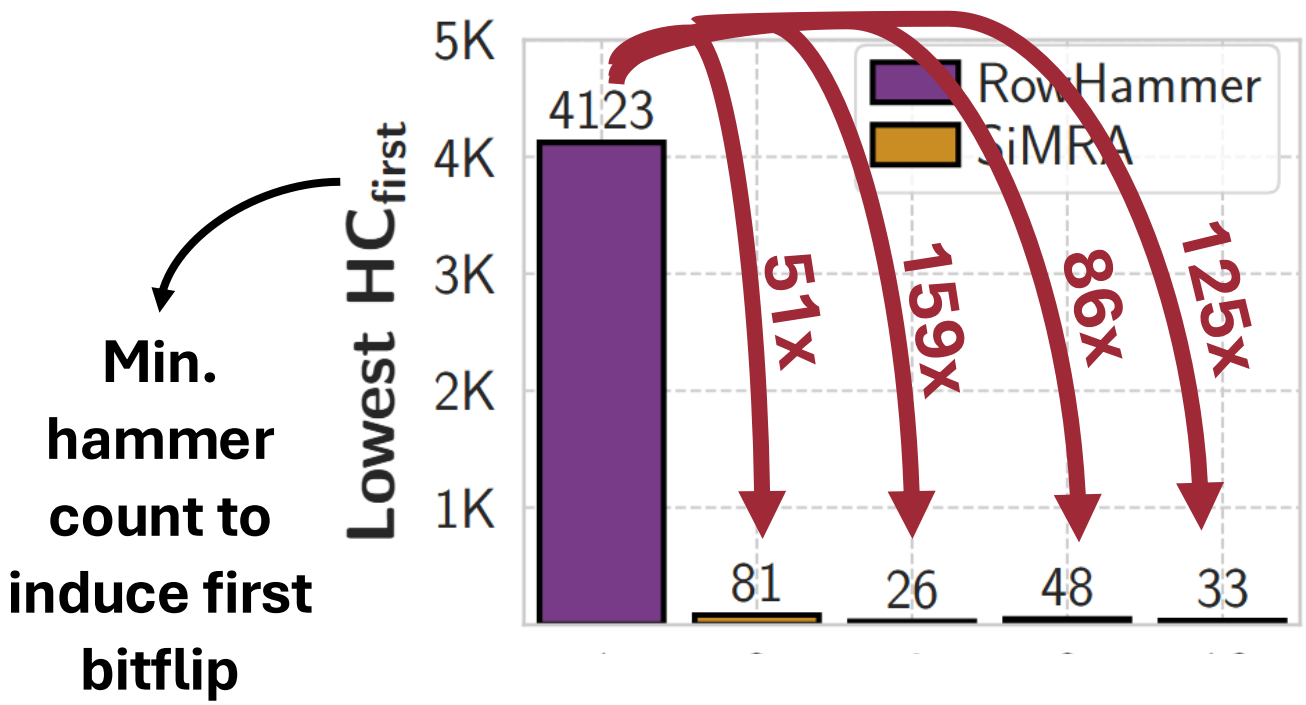

Double-sided SiMRA decreases lowest HC_{first} by 159x compared to double-sided RowHammer

Lowest HC_{first} reduction trend consistent across all tested number of simultaneously activated rows

Available on arXiv

PuDHammer: Experimental Analysis of Read Disturbance Effects of Processing-using-DRAM in Real DRAM Chips

İsmail Emir Yüksel Akash Sood Ataberk Olgun Oğuzhan Canpolat Haocong Luo
F. Nisa Bostancı Mohammad Sadrosadati A. Giray Yağlıkçı Onur Mutlu

ETH Zürich

Processing-using-DRAM (PuD) is a promising paradigm for alleviating the data movement bottleneck using a DRAM array's massive internal parallelism and bandwidth to execute very wide data-parallel operations. Performing a PuD operation involves activating multiple DRAM rows in quick succession or simultaneously, i.e., multiple-row activation. Multiple-row activation is fundamentally different from conventional memory access patterns that activate one DRAM row at a time. However, repeatedly activating even one DRAM row (e.g., RowHammer) can induce bitflips in unaccessed DRAM rows because modern DRAM is subject to read disturbance, a worsening safety, security, and reliability issue. Unfortunately, no prior work investigates the effects of multiple-row activation, as commonly used by PuD operations, on DRAM read disturbance.

In this paper, we present the first characterization study of read disturbance effects of multiple-row activation-based PuD (which we call PuDHammer) using 316 real DDR4 DRAM chips from four major DRAM manufacturers. Our detailed characterization results covering various operational conditions and parameters (i.e., temperature, data patterns, access patterns, timing parameters,

CPU and GPU) [1, 2]. Unfortunately, this data movement is a major bottleneck that consumes a large fraction of execution time and energy in many modern applications [1–28]. Processing-using-DRAM (PuD) [29–34] is a promising paradigm that can alleviate the data movement bottleneck. PuD uses the analog operational properties of the DRAM array circuitry to enable massively parallel in-DRAM computation (i.e., PuD operations), which can be used to accelerate important applications including databases and web search [29, 30, 32, 35–43], data analytics [29, 44–48], graph processing [32, 48–51], genome analysis [52–57], cryptography [58, 59], hyper-dimensional computing [60–62], and generative AI [63–72].

A wide variety of PuD operations (e.g., in-DRAM data copy and bulk bitwise operations) rely on a key PuD technique called *multiple-row activation*, which accesses (activates) multiple DRAM rows in quick succession or simultaneously [29–32, 40, 73–84]. Multiple-row activation is fundamentally different from conventional DRAM operations that access only a *single* DRAM row at a time.

https://arxiv.org/pdf/2506.12947

PuDHammer

Experimental Analysis of Read Disturbance Effects of Processing-using-DRAM in Real DRAM Chips

İsmail Emir Yüksel

Akash Sood Ataberk Olgun Oğuzhan Canpolat Haocong Luo

Nisa Bostancı Mohammad Sadrosadati Giray Yağlıkçı Onur Mutlu

SAFARI ETH zürich

Understanding the Computational Capabilities of Real DRAM Chips and Robustness Issues They Introduce

İsmail Emir Yüksel

23.03.2026

MCCSys@ASPLOS'26

SAFARI

ETH zürich