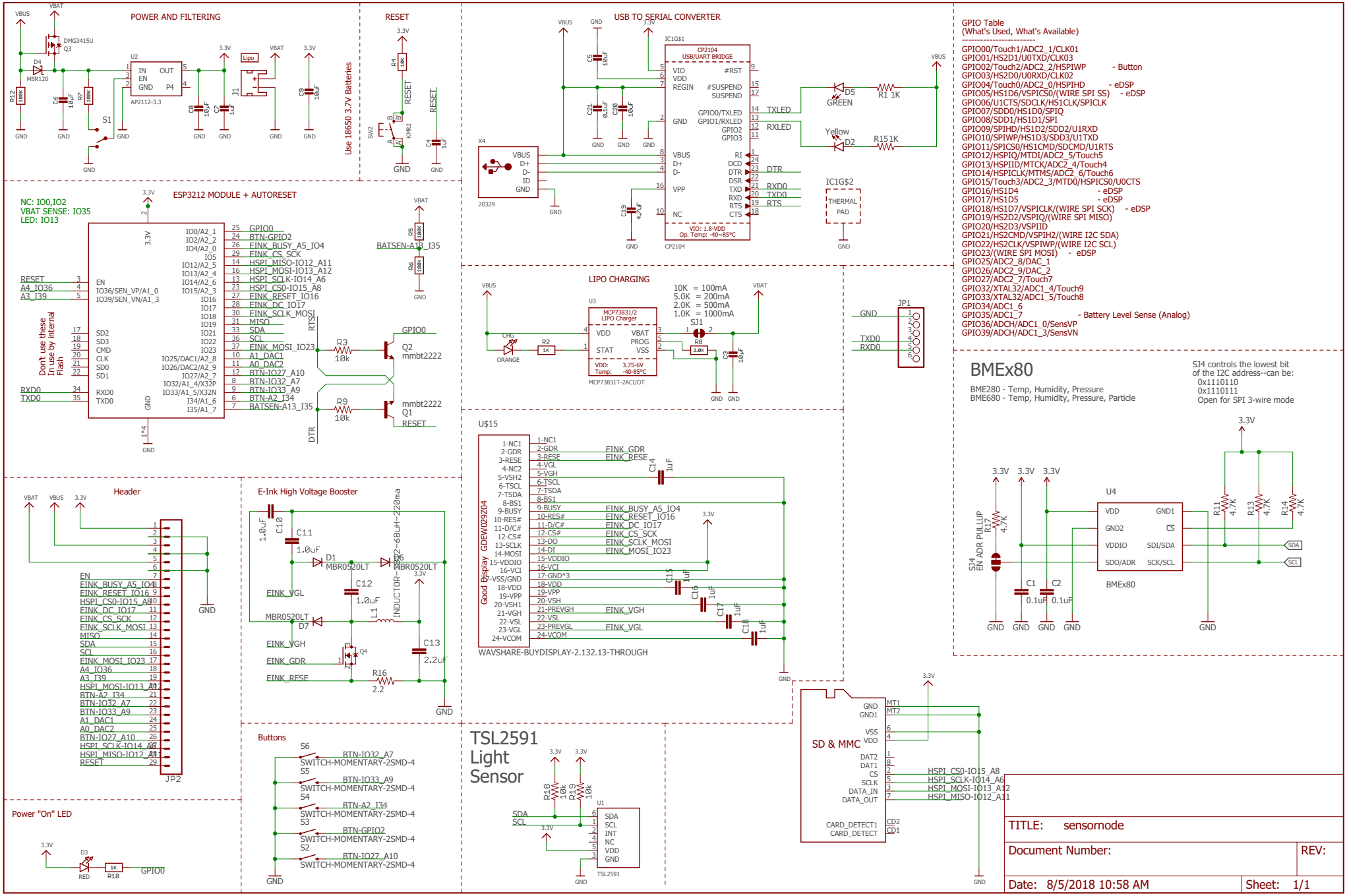

8/7/2018 11:34 PM f=0.67 C:\Users\warthog9\Documents\eagle\sensornode\sensornode.sch (Sheet: 1/1)