TABLE OF CONTENTS

SHEET NO.	SHEET NAME	BLOCK NAME
1	TABLE OF CONTENT	pc065d_fibv2b_toplevel
2	POWER	pc065d_fibv2b_toplevel
3	FMC_CONNECTOR	pc065d_fibv2b_toplevel
4	SFP_CONNECTORS	pc065d_fibv2b_toplevel
5	SFP_INTERFACES_0:3	pc065d_fibv2b_toplevel
6	SFP_INTERFACES_4:7	pc065d_fibv2b_toplevel
7	CLOCK	pc065d_fibv2b_toplevel
8	I2C LEVEL TRANSLATORS	pc065d_fibv2b_toplevel
9	LEVEL TRANSLATORS	pc065d_fibv2b_toplevel
10	CONNECTORS	pc065d_fibv2b_toplevel
11	EEPROM	pc065d_fibv2b_toplevel
12	page1	sfp_module
13	page1	sfp_module
14	page1	sfp_module
15	page1	sfp_module

TABLE OF CONTENTS

SHEET NO.	SHEET NAME	BLOCK NAME

TABLE OF CONTENTS

SHEET NO.	SHEET NAME	BLOCK NAME

I2C ADDRESSES

EEPROM (IC1) 0X50 (ALTERNATIVE: 0X51)
TEMP MONITOR (IC2) 0X48

PROJECT:	pc065d_fibv2b_toplevel		
PARTICLE PHYSICS UNIVERSITY OF BRISTOL H. H. WILLS PHYSICS LABORATORY TYNDALL AVENUE, BS8 1TL BRISTOL, UK	REVISION: 3	DATE MODIFIED: 2/March/2026	
	DESIGNED BY: P. Baesso, D. Cussans, M. Alhusseini	SHEET: 1 / 31	
	TABLE OF CONTENT		

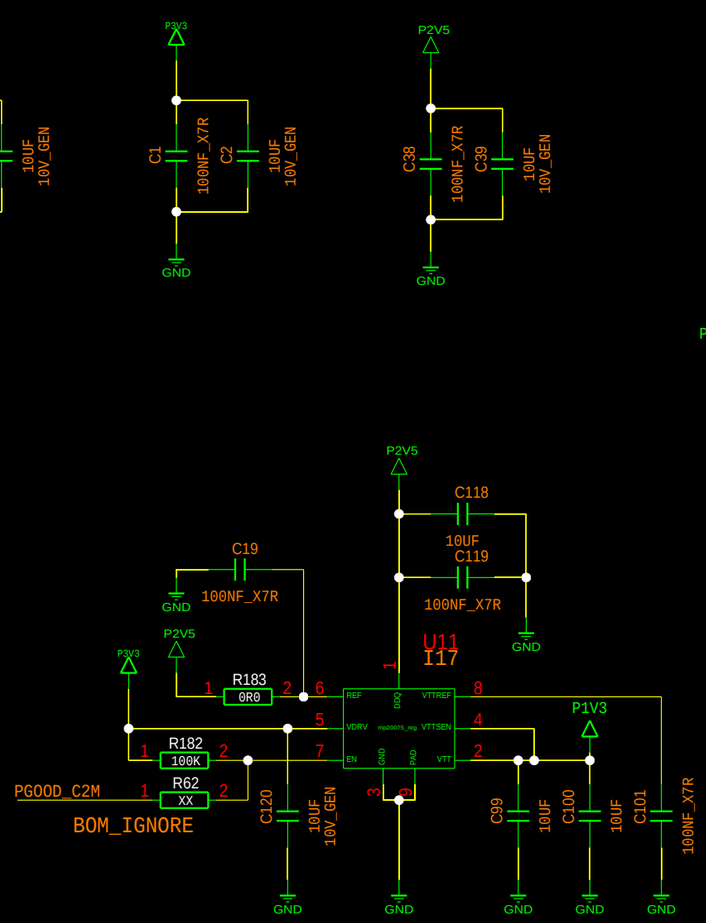

USE 2V5 OR VADJ FOR TRANSLATORS?

FOR NOW PLACE A JUMPER+TP TO ALLOW
CONNECTING VADJ TO P2V5 OR USING
EXTERNAL WIRE

MAX CURRENTS PER RAILS
P3V3: 3 A
P12V: 1A
VADJ: 4 A

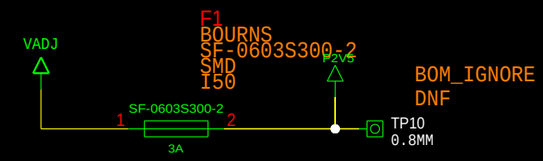

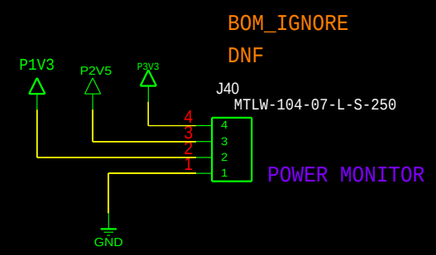

PROJECT:	pc065d_fibv2b_toplevel		
PARTICLE PHYSICS UNIVERSITY OF BRISTOL H. H. WILLS PHYSICS LABORATORY TYNDALL AVENUE, BS8 1TL BRISTOL, UK	REVISION: 3	DATE MODIFIED: 2/March/2026	
	DESIGNED BY: P. Baesso, D. Cussans, M. Alouani	SIZE: A3	SHEET: 2 / 31
	POWER		

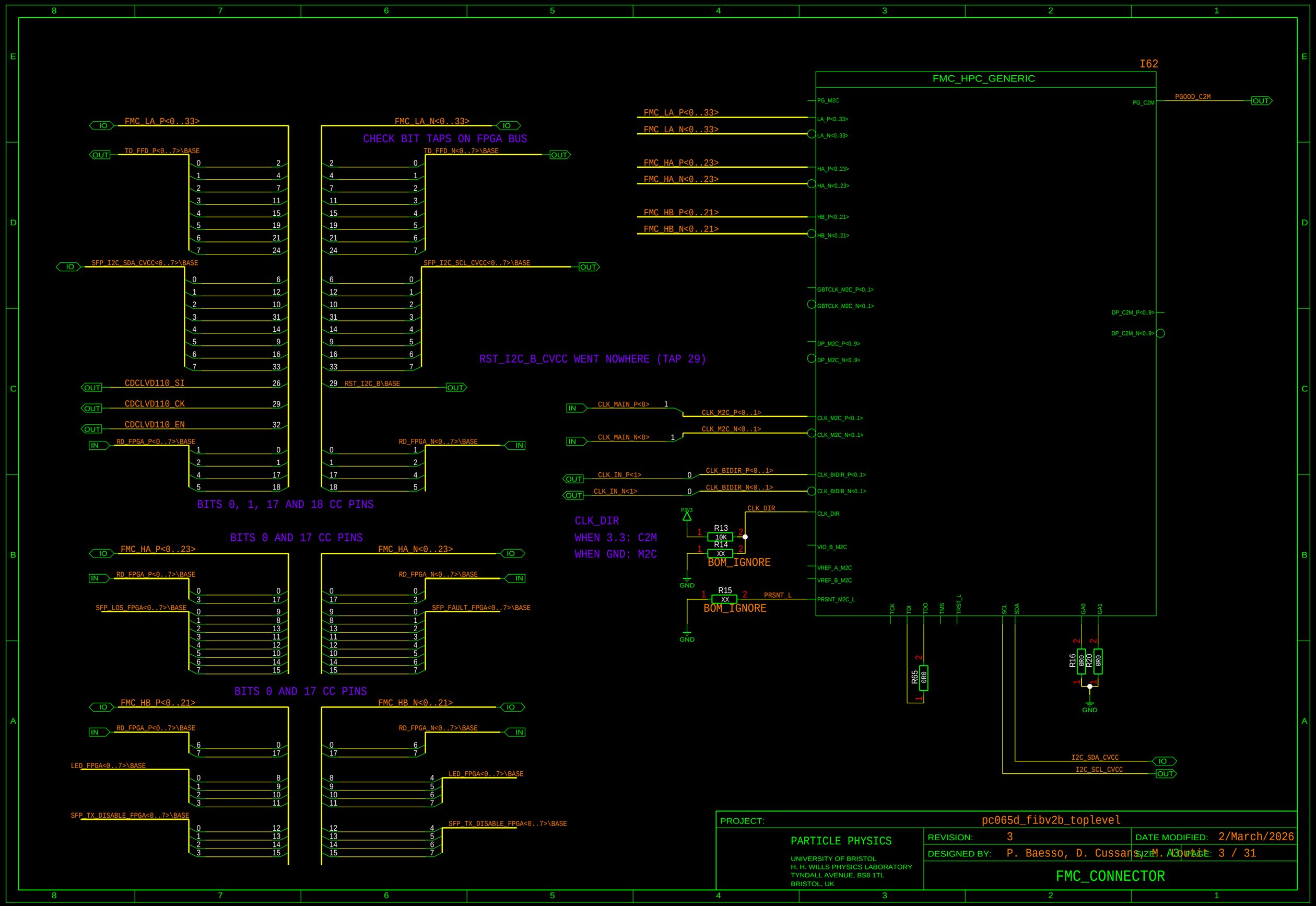
I62
FMC_HPC_GENERIC
FMC_LA_P<0..33>
FMC_LA_N<0..33>
CHECK BIT TAPS ON FPGA BUS
TD_FFD_P<0..7>\BASE
TD_FFD_N<0..7>\BASE
SFP_I2C_SDA_CVCC<0..7>\BASE
SFP_I2C_SCL_CVCC<0..7>\BASE
CDCLVD110_SI
CDCLVD110_CK
CDCLVD110_EN
RST_I2C_B\BASE
RST_I2C_B_CVCC WENT NOWHERE (TAP 29)
RD_FPGA_P<0..7>\BASE
RD_FPGA_N<0..7>\BASE
BITS 0, 1, 17 AND 18 CC PINS
FMC_HA_P<0..23>
FMC_HA_N<0..23>
BITS 0 AND 17 CC PINS
SFP_LOS_FPGA<0..7>\BASE
SFP_FAULT_FPGA<0..7>\BASE
FMC_HB_P<0..21>
FMC_HB_N<0..21>
LED_FPGA<0..7>\BASE
SFP_TX_DISABLE_FPGA<0..7>\BASE
CLK_MAIN_P<8>
CLK_MAIN_N<8>
CLK_M2C_P<0..1>
CLK_M2C_N<0..1>
CLK_IN_P<1>
CLK_IN_N<1>
CLK_BIDIR_P<0..1>
CLK_BIDIR_N<0..1>
CLK_DIR
WHEN 3.3: C2M
WHEN GND: M2C
R13 10K
R14 XX
BOM_IGNORE
R15 XX
BOM_IGNORE
PRSNT_L
PG_M2C
PG_C2M
PGOOD_C2M
GBTCLK_M2C_P<0..1>
GBTCLK_M2C_N<0..1>
DP_C2M_P<0..9>
DP_C2M_N<0..9>
DP_M2C_P<0..9>
DP_M2C_N<0..9>
VIO_B_M2C
VREF_A_M2C
VREF_B_M2C
PRSNT_M2C_L
TCK
TDI
TDO
TMS
TRST_L
SCL
SDA
GA0
GA1
R65 0R0
R16 0R0
R20 0R0
I2C_SDA_CVCC
I2C_SCL_CVCC
P3V3
GND
PROJECT: pc065d_fibv2b_toplevel
PARTICLE PHYSICS
UNIVERSITY OF BRISTOL
H. H. WILLS PHYSICS LABORATORY
TYNDALL AVENUE, BS8 1TL
BRISTOL, UK
REVISION: 3
DATE MODIFIED: 2/March/2026
DESIGNED BY: P. Baesso, D. Cussans, M. Alouit
SHEET: 3 / 31
FMC_CONNECTOR

1X4 SFP+ CAGE
USE 2110069-1 FOR LIGHTPIPES
USE 2007132-1 FOR NO LIGHTGUIDES

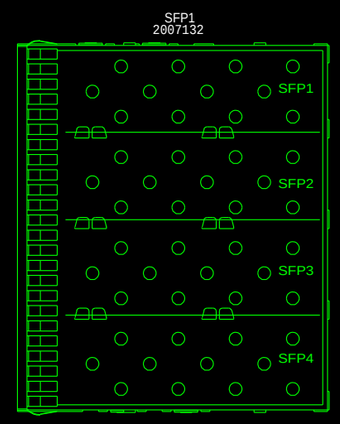

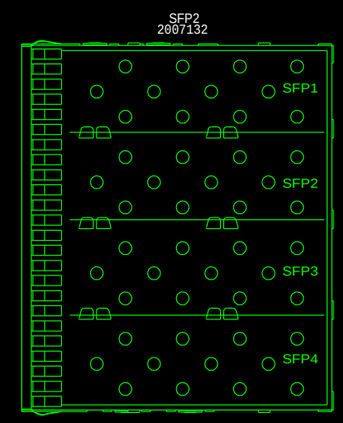

PROJECT:	pc065d_fibv2b_toplevel		
PARTICLE PHYSICS UNIVERSITY OF BRISTOL H. H. WILLS PHYSICS LABORATORY TYNDALL AVENUE, BS8 1TL BRISTOL, UK	REVISION: 3	DATE MODIFIED: 2/March/2026	
	DESIGNED BY: P. Baesso, D. Cussans, M. Alouati	SIZE: A3	SHEET: 4 / 31
	SFP_CONNECTORS		

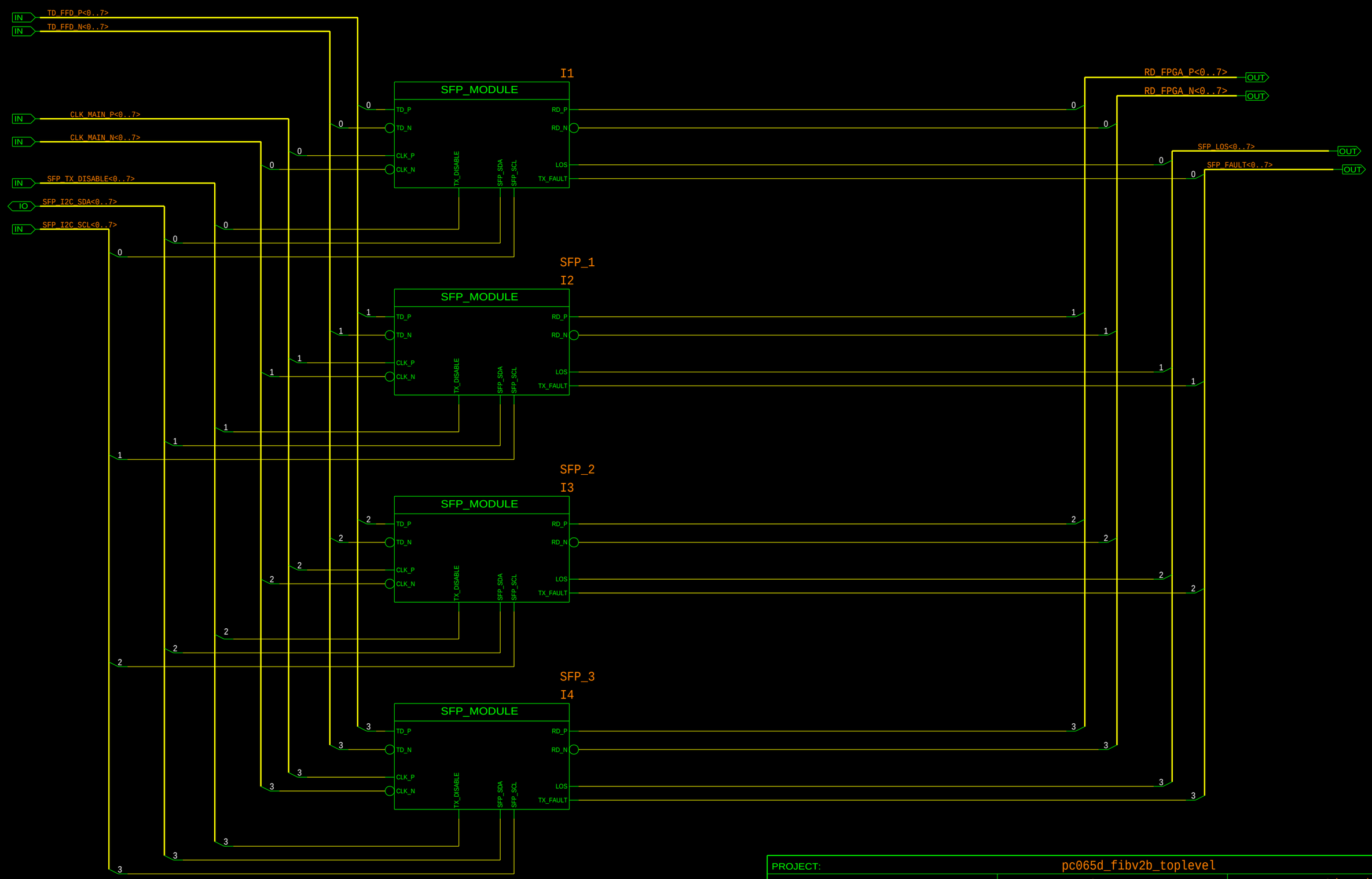

PROJECT:	pc065d_fibv2b_toplevel		
PARTICLE PHYSICS UNIVERSITY OF BRISTOL H. H. WILLS PHYSICS LABORATORY TYNDALL AVENUE, BS8 1TL BRISTOL, UK	REVISION: 3	DATE MODIFIED: 2/March/2026	
	DESIGNED BY: P. Baesso, D. Cussans, M. Alnuaim	SHEET: 5 / 31	
	SFP_INTERFACE_0:3		

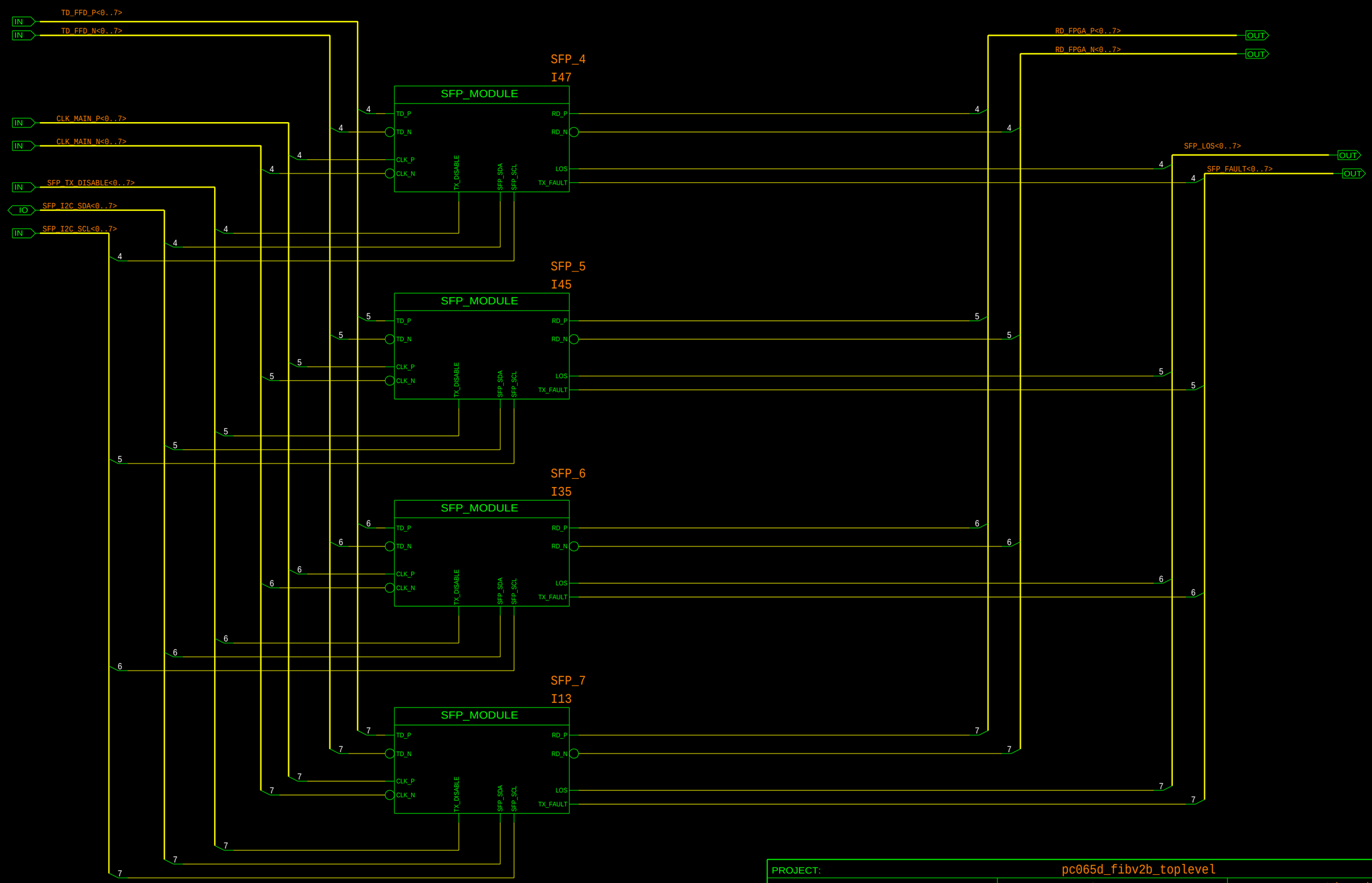

PROJECT:	pc065d_fibv2b_toplevel		
PARTICLE PHYSICS UNIVERSITY OF BRISTOL H. H. WILLS PHYSICS LABORATORY TYNDALL AVENUE, BS8 1TL BRISTOL, UK	REVISION: 3	DATE MODIFIED: 2/March/2026	
	DESIGNED BY: P. Baesso, D. Cussans, M. Alnuaim	SHEET: 6 / 31	
	SFP_INTERFACE_4:7		

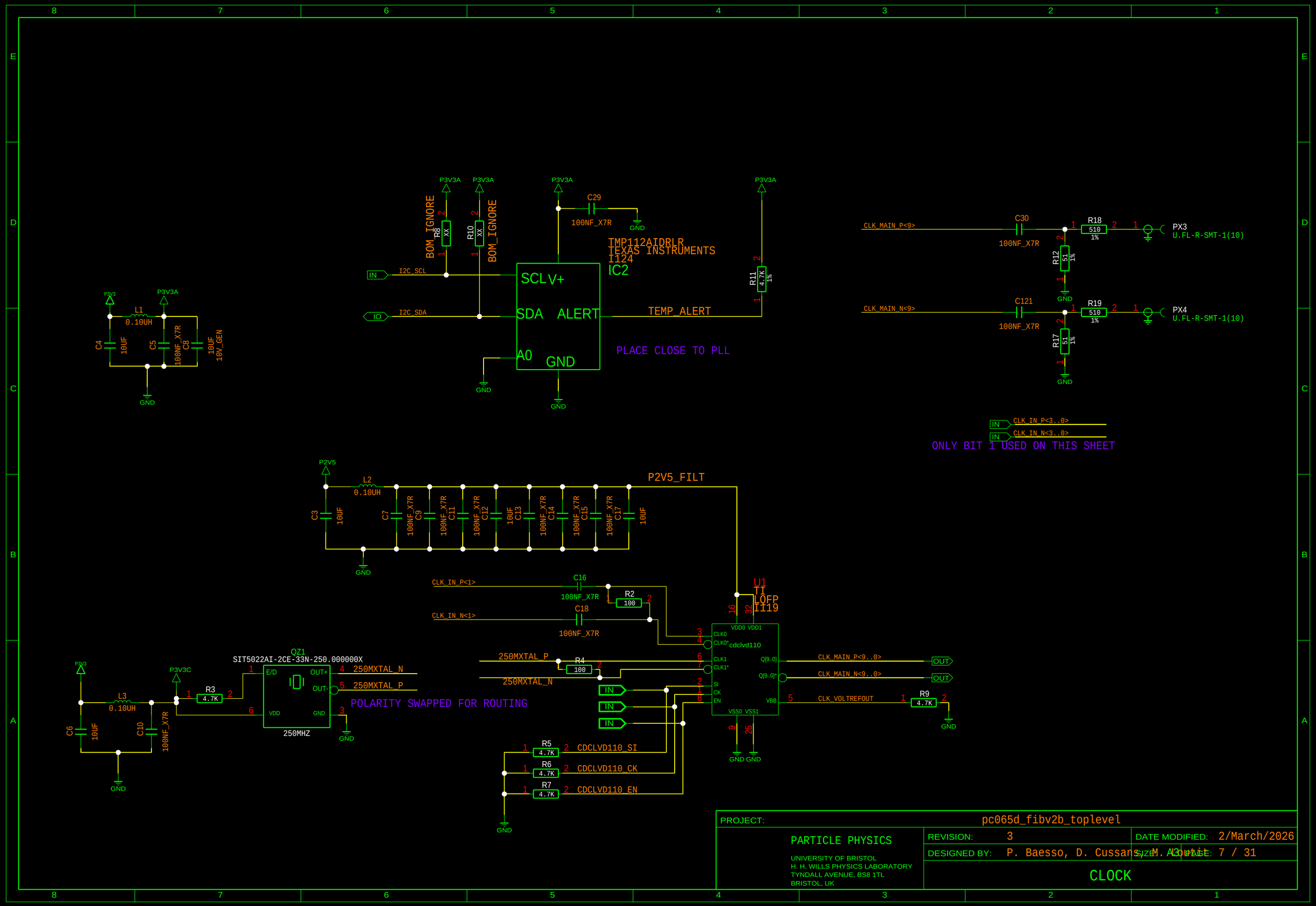

PROJECT: pc065d_fibv2b_toplevel

PARTICLE PHYSICS

UNIVERSITY OF BRISTOL
H. H. WILLS PHYSICS LABORATORY
TYNDALL AVENUE, BS8 1TL
BRISTOL, UK

REVISION: 3
DATE MODIFIED: 2/March/2026
DESIGNED BY: P. Baesso, D. Cussans, M. Alouani
SIZE: A3
SHEET: 7 / 31

CLOCK

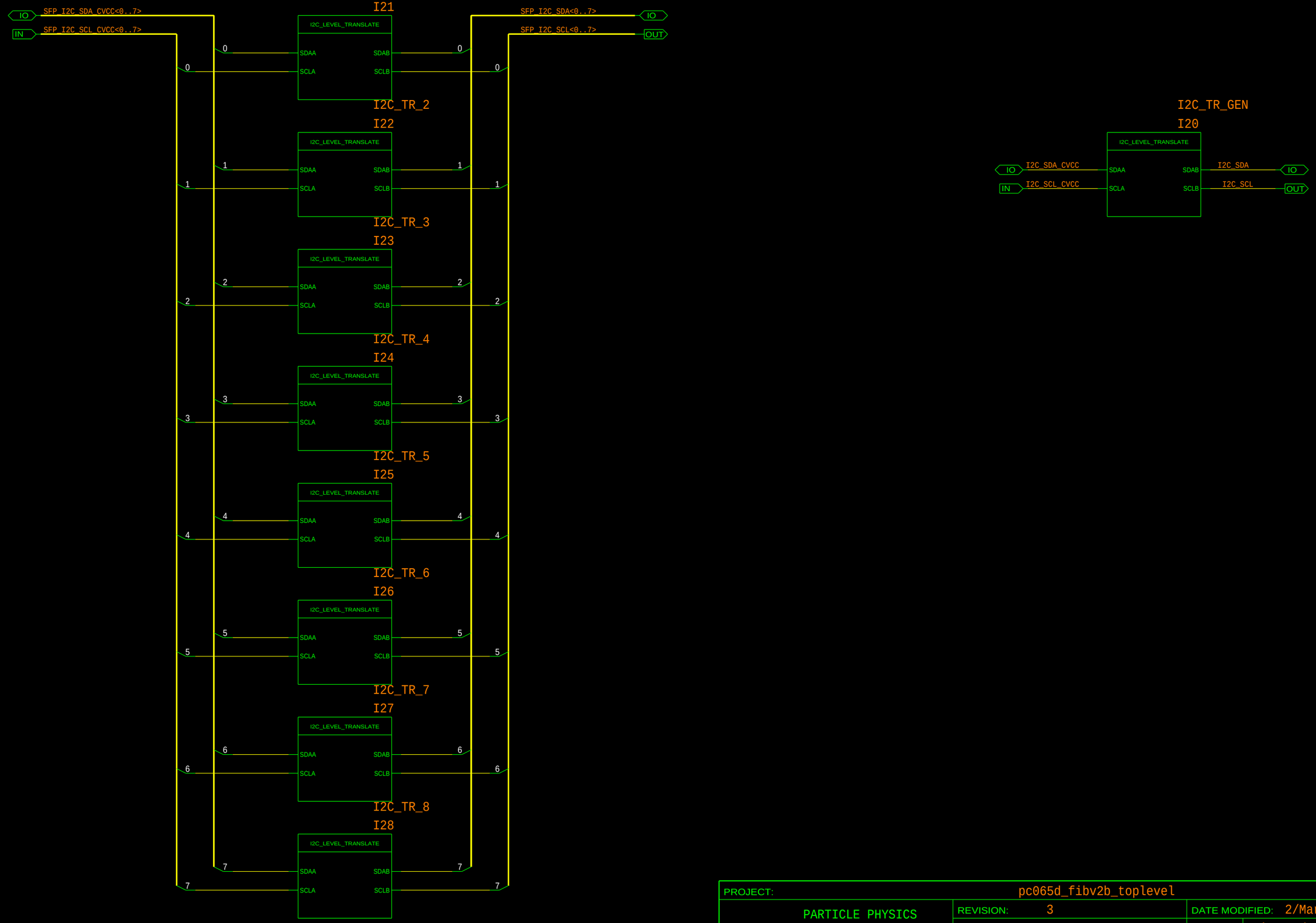

PROJECT:	pc065d_fibv2b_toplevel		
PARTICLE PHYSICS UNIVERSITY OF BRISTOL H. H. WILLS PHYSICS LABORATORY TYNDALL AVENUE, BS8 1TL BRISTOL, UK	REVISION: 3	DATE MODIFIED: 2/March/2026	
	DESIGNED BY: P. Baesso, D. Cussans, M. Alomari	SHEET: 8 / 31	
	I2C LEVEL TRANSLATORS		

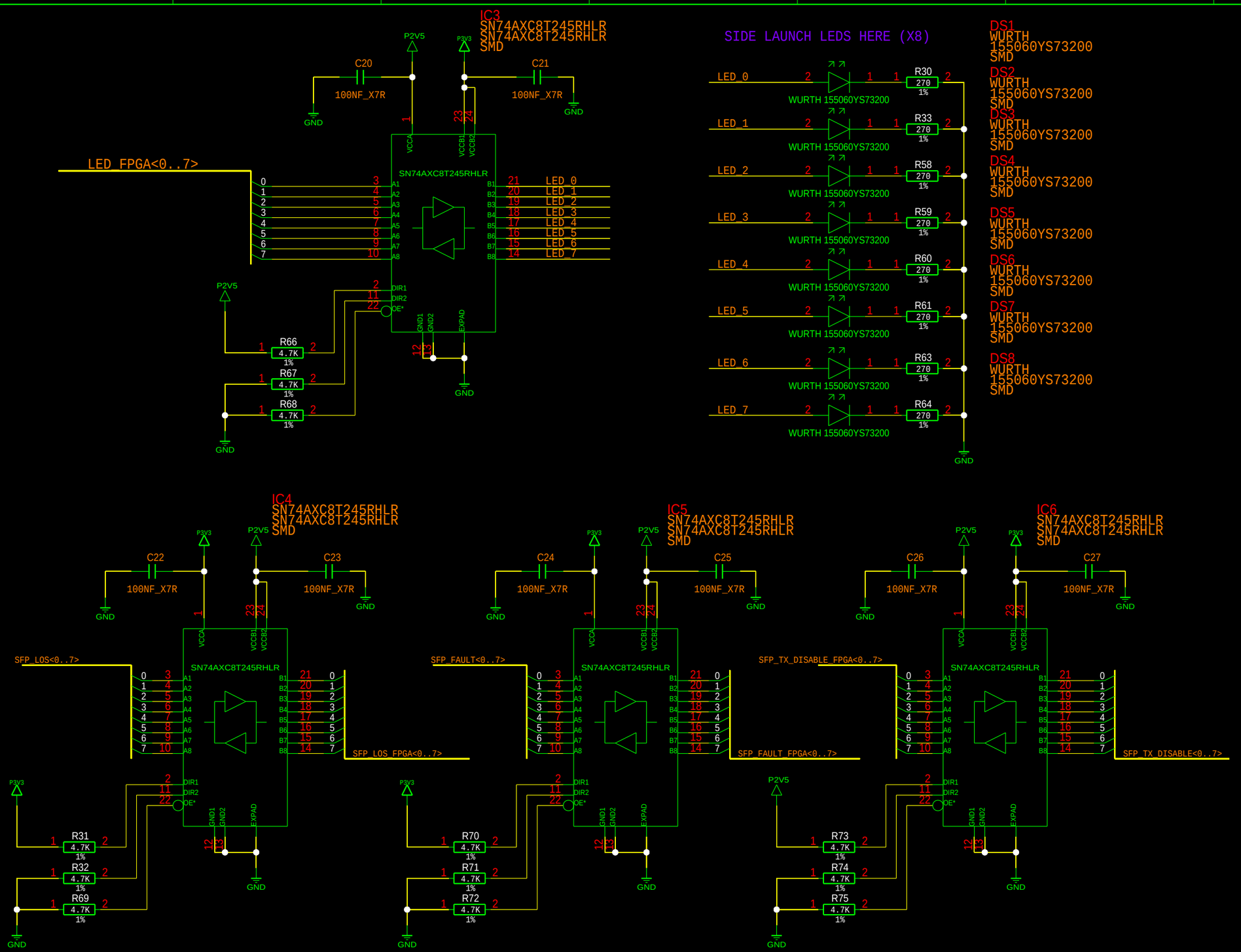

PROJECT:	pc065d_fibv2b_toplevel		
PARTICLE PHYSICS UNIVERSITY OF BRISTOL H. H. WILLS PHYSICS LABORATORY TYNDALL AVENUE, BS8 1TL BRISTOL, UK	REVISION: 3	DATE MODIFIED: 2/March/2026	
	DESIGNED BY: P. Baesso, D. Cussans, M. Alomari	SIZE: A3	PAGE: 9 / 31
	LEVEL TRANSLATORS		

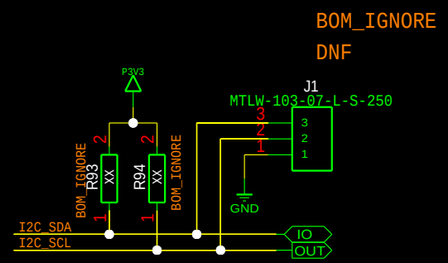

PROJECT:	pc065d_fibv2b_toplevel		
PARTICLE PHYSICS UNIVERSITY OF BRISTOL H. H. WILLS PHYSICS LABORATORY TYNDALL AVENUE, BS8 1TL BRISTOL, UK	REVISION: 3	DATE MODIFIED: 2/March/2026	
	DESIGNED BY: P. Baesso, D. Cussans, M. Aoulaiche	SHEET: 10 / 31	
	CONNECTORS		

NBSG53AMNG IS AT END OF LIFE. DO NOT USE
ALTERNATIVES:
NB7V52MMNG
SY55852U
MAX9381EUA+

ADN2814ACPZ IS NO LONGER AVAILABLE

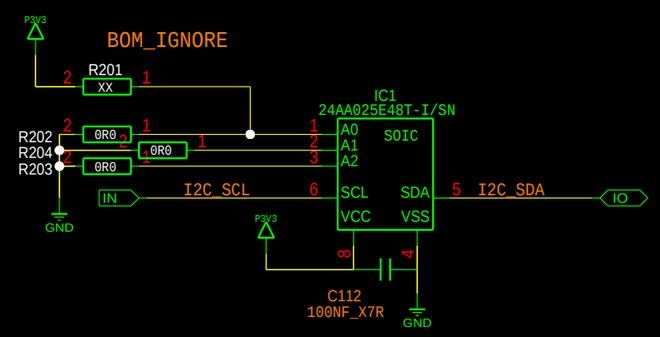

PROJECT:	pc065d_fibv2b_toplevel		
PARTICLE PHYSICS UNIVERSITY OF BRISTOL H. H. WILLS PHYSICS LABORATORY TYNDALL AVENUE, BS8 1TL BRISTOL, UK	REVISION: 3	DATE MODIFIED: 2/March/2026	
	DESIGNED BY: P. Baesso, D. Cussans, M. Alomari	SIZE: A3	SHEET: 11 / 31
	EEPROM		

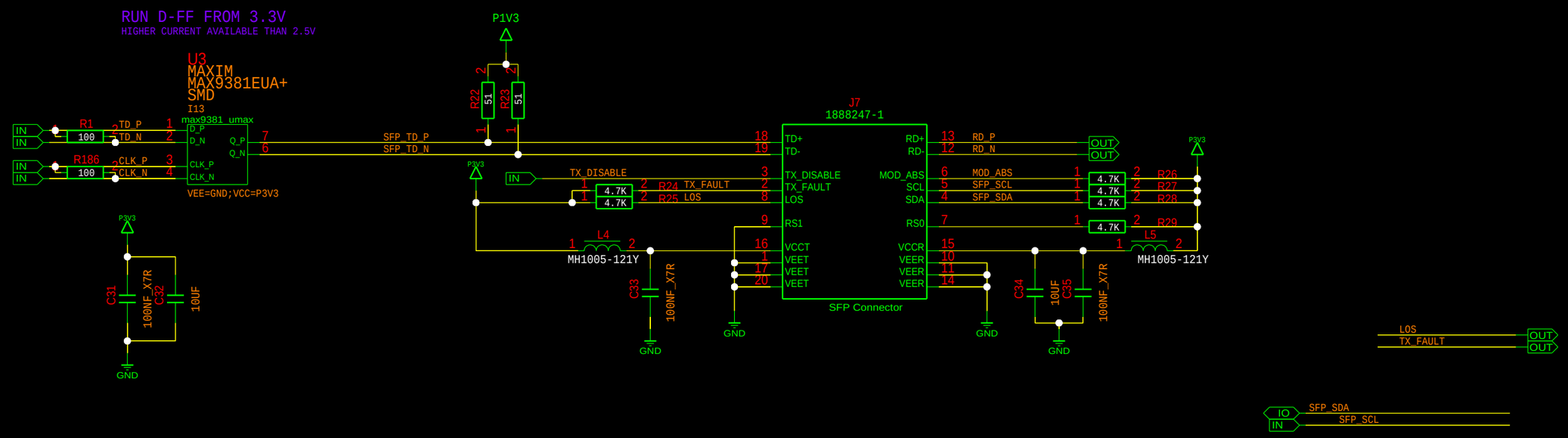

PROJECT:	sfp_module		
PARTICLE PHYSICS UNIVERSITY OF BRISTOL H. H. WILLS PHYSICS LABORATORY TYNDALL AVENUE, BS8 1TL BRISTOL, UK	REVISION: 3	DATE MODIFIED: 2/March/2026	
	DESIGNED BY: P. Baesso, D. Cussans, M. Alouati	SIZE: A3	SHEET: 12 / 31
	SFP_MODULE		

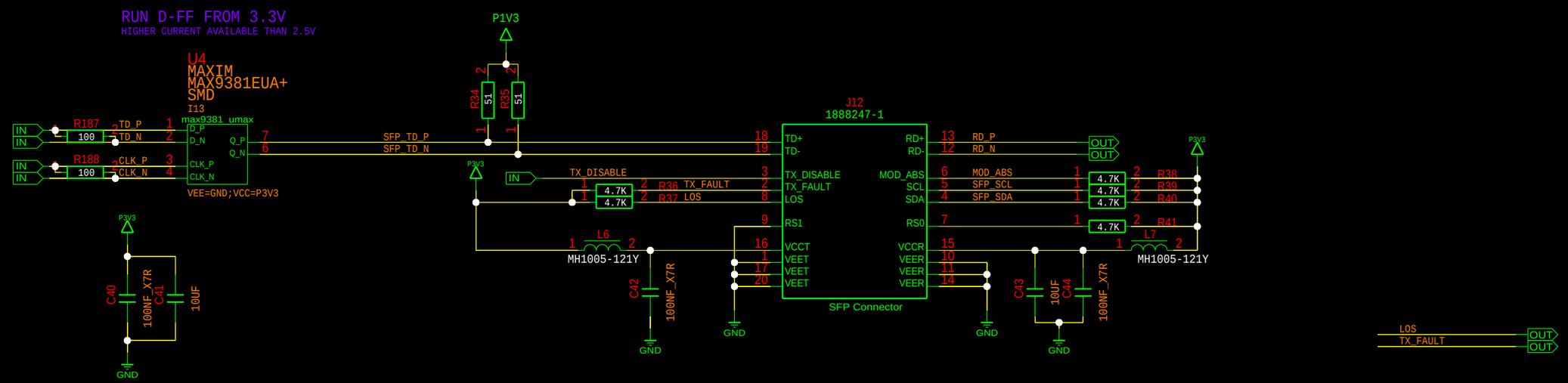

PROJECT: sfp_module

PARTICLE PHYSICS

UNIVERSITY OF BRISTOL
H. H. WILLS PHYSICS LABORATORY
TYNDALL AVENUE, BS8 1TL
BRISTOL, UK

REVISION: 3

DATE MODIFIED: 2/March/2026

DESIGNED BY: P. Baesso, D. Cussans, M. Alouati

SIZE: A3 SHEET: 13 / 31

SFP_MODULE

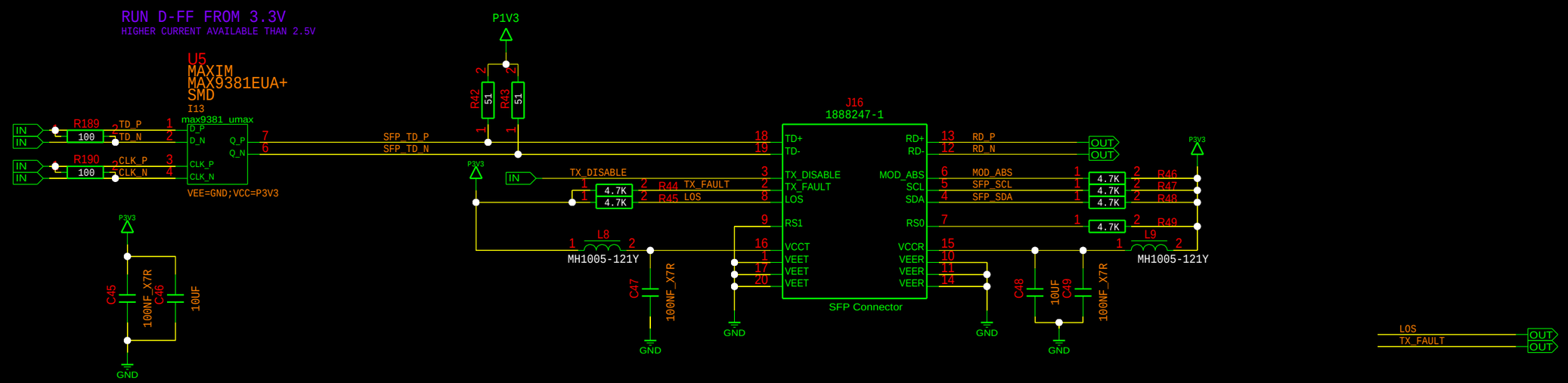

PROJECT:	sfp_module		
PARTICLE PHYSICS UNIVERSITY OF BRISTOL H. H. WILLS PHYSICS LABORATORY TYNDALL AVENUE, BS8 1TL BRISTOL, UK	REVISION: 3	DATE MODIFIED: 2/March/2026	
	DESIGNED BY: P. Baesso, D. Cussans, M. Alouati	SIZE: A3	SHEET: 14 / 31
	SFP_MODULE		

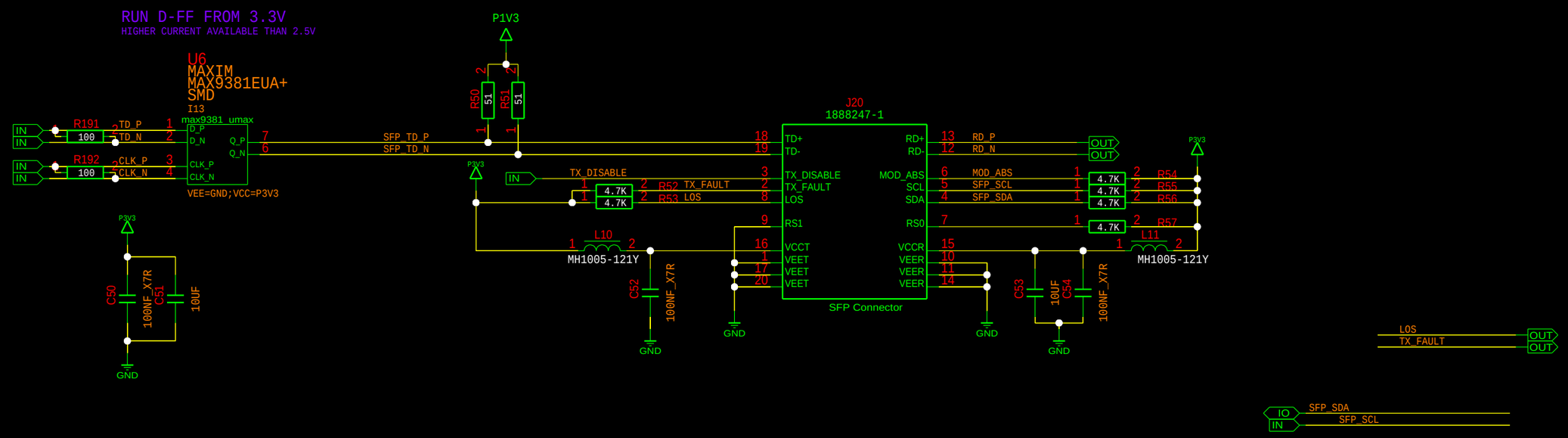

PROJECT: sfp_module

PARTICLE PHYSICS

UNIVERSITY OF BRISTOL
H. H. WILLS PHYSICS LABORATORY
TYNDALL AVENUE, BS8 1TL
BRISTOL, UK

REVISION: 3

DATE MODIFIED: 2/March/2026

DESIGNED BY: P. Baesso, D. Cussans, M. Alouati

SIZE: A3 SHEET: 15 / 31

SFP_MODULE

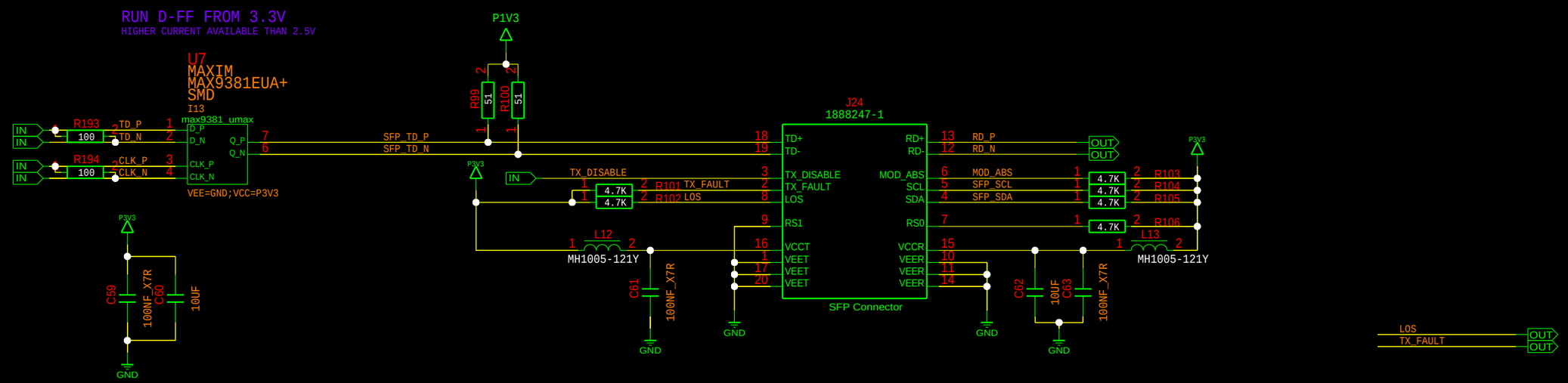

PROJECT: sfp_module

PARTICLE PHYSICS

UNIVERSITY OF BRISTOL
H. H. WILLS PHYSICS LABORATORY
TYNDALL AVENUE, BS8 1TL
BRISTOL, UK

REVISION:	3	DATE MODIFIED:	2/March/2026
DESIGNED BY:	P. Baesso, D. Cussans, M. Alouati	SIZE: A3	SHEET: 16 / 31

SFP_MODULE

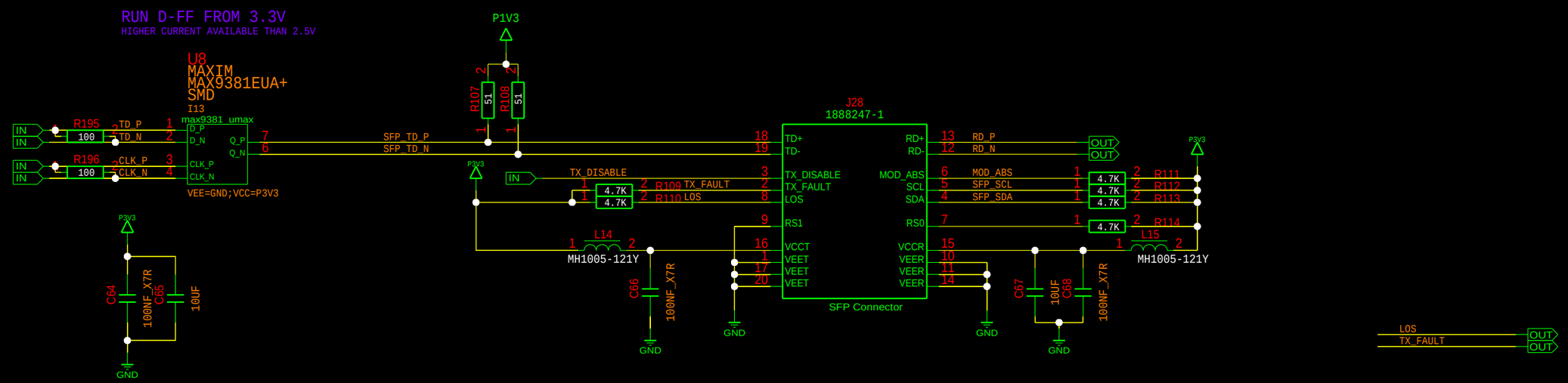

PROJECT:	sfp_module		
PARTICLE PHYSICS UNIVERSITY OF BRISTOL H. H. WILLS PHYSICS LABORATORY TYNDALL AVENUE, BS8 1TL BRISTOL, UK	REVISION: 3	DATE MODIFIED: 2/March/2026	
	DESIGNED BY: P. Baesso, D. Cussans, M. Alouati	SIZE: A3	SHEET: 17 / 31
	SFP_MODULE		

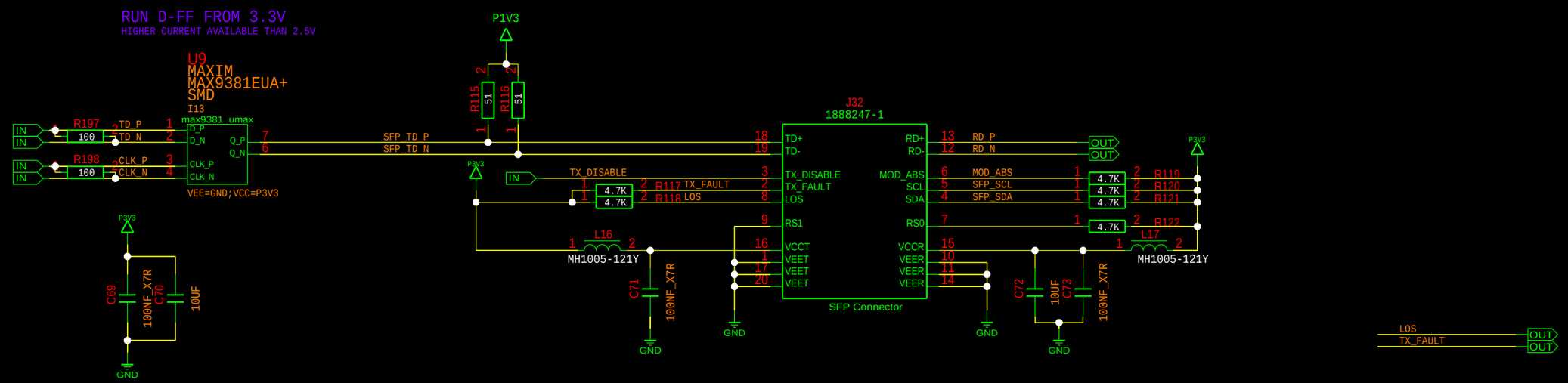

PROJECT: sfp_module

PARTICLE PHYSICS

UNIVERSITY OF BRISTOL
H. H. WILLS PHYSICS LABORATORY
TYNDALL AVENUE, BS8 1TL
BRISTOL, UK

REVISION: 3

DATE MODIFIED: 2/March/2026

DESIGNED BY: P. Baesso, D. Cussans, M. Alouati

SIZE: A3 SHEET: 18 / 31

SFP_MODULE

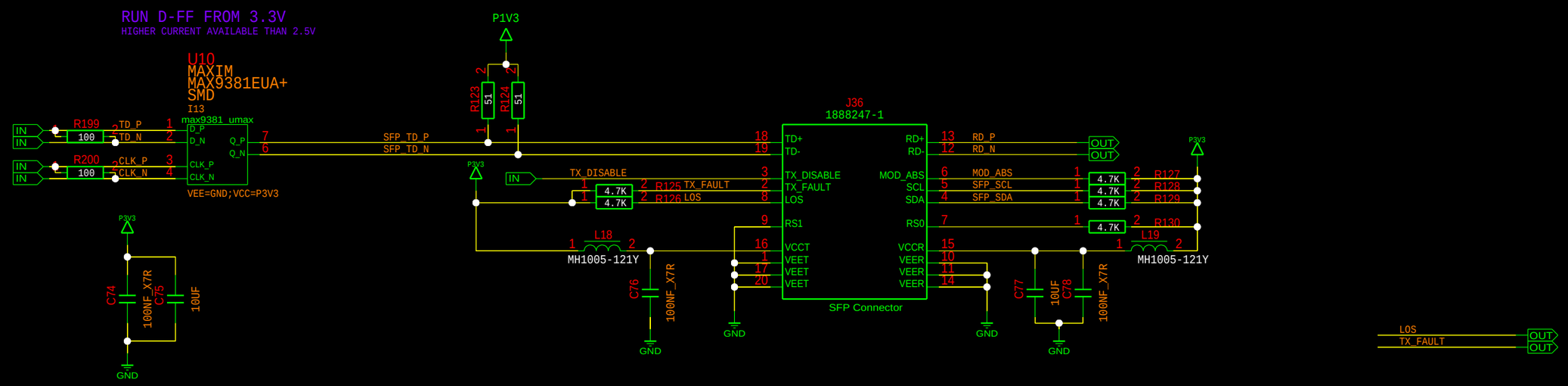

PROJECT:	sfp_module		
PARTICLE PHYSICS UNIVERSITY OF BRISTOL H. H. WILLS PHYSICS LABORATORY TYNDALL AVENUE, BS8 1TL BRISTOL, UK	REVISION: 3	DATE MODIFIED: 2/March/2026	
	DESIGNED BY: P. Baesso, D. Cussans, M. Alouani	SIZE: A3	SHEET: 19 / 31
	SFP_MODULE		

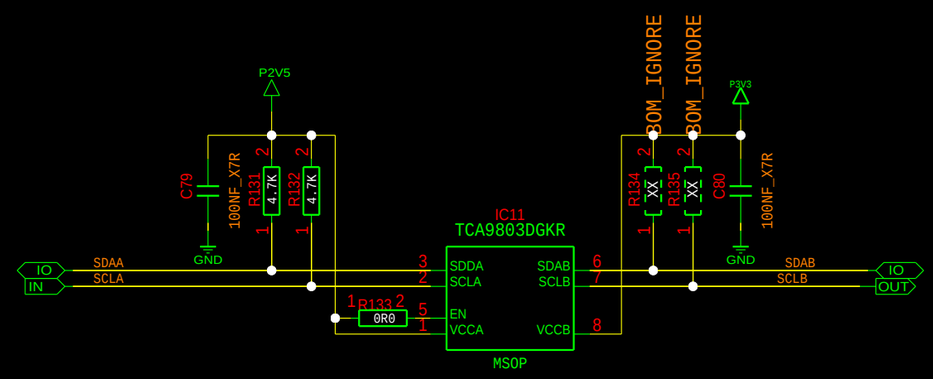

PROJECT: i2c_level_translate

PARTICLE PHYSICS

UNIVERSITY OF BRISTOL
H. H. WILLS PHYSICS LABORATORY
TYNDALL AVENUE, BS8 1TL
BRISTOL, UK

REVISION: 3

DATE MODIFIED: 2/March/2026

DESIGNED BY: P. Baesso, D. Cussans, M. Aoulaiche

SIZE: A3 SHEET: 20 / 31

I2C LEVEL TRANSLATOR

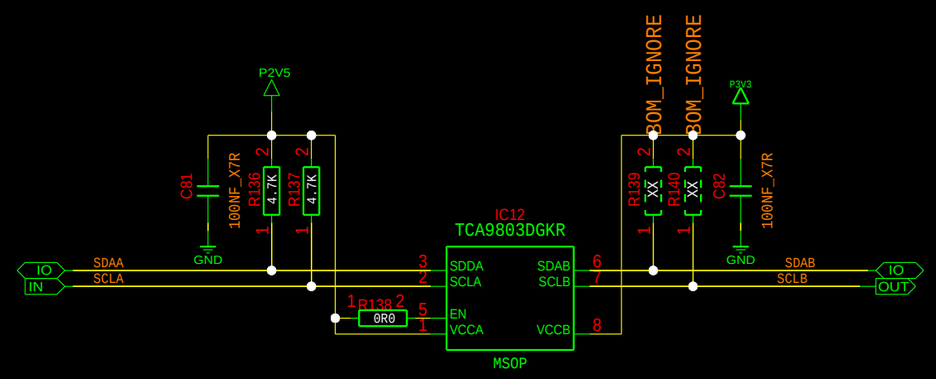

PROJECT: i2c_level_translate

PARTICLE PHYSICS

UNIVERSITY OF BRISTOL
H. H. WILLS PHYSICS LABORATORY
TYNDALL AVENUE, BS8 1TL
BRISTOL, UK

REVISION: 3

DATE MODIFIED: 2/March/2026

DESIGNED BY: P. Baesso, D. Cussans, M. Alouani

SIZE: A3 SHEET: 21 / 31

I2C LEVEL TRANSLATOR

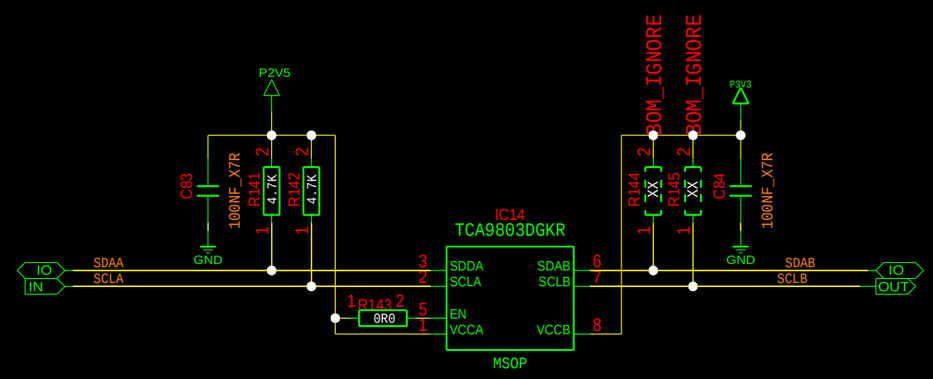

PROJECT: i2c_level_translate

PARTICLE PHYSICS

UNIVERSITY OF BRISTOL
H. H. WILLS PHYSICS LABORATORY
TYNDALL AVENUE, BS8 1TL
BRISTOL, UK

REVISION: 3

DATE MODIFIED: 2/March/2026

DESIGNED BY: P. Baesso, D. Cussans, M. Aldous

SIZE: A3 PAGE: 22 / 31

I2C LEVEL TRANSLATOR

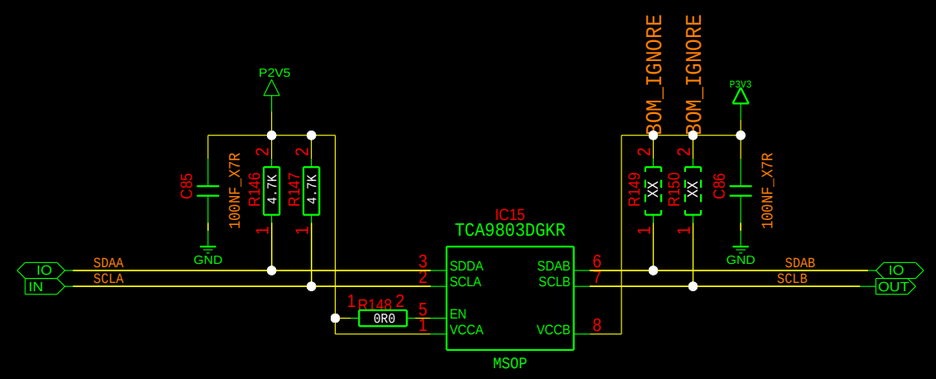

PROJECT: i2c_level_translate

PARTICLE PHYSICS

UNIVERSITY OF BRISTOL
H. H. WILLS PHYSICS LABORATORY
TYNDALL AVENUE, BS8 1TL
BRISTOL, UK

REVISION: 3

DATE MODIFIED: 2/March/2026

DESIGNED BY: P. Baesso, D. Cussans, M. Aboutabit

SIZE: A3 SHEET: 23 / 31

I2C LEVEL TRANSLATOR

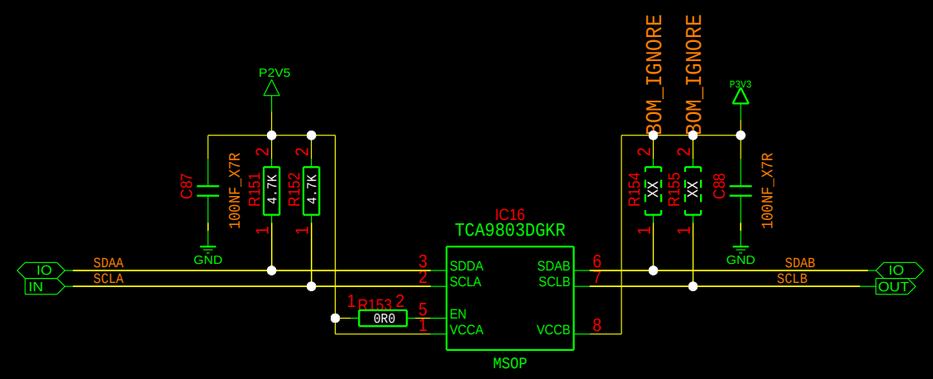

PROJECT: i2c_level_translate

PARTICLE PHYSICS

UNIVERSITY OF BRISTOL
H. H. WILLS PHYSICS LABORATORY
TYNDALL AVENUE, BS8 1TL
BRISTOL, UK

REVISION: 3

DATE MODIFIED: 2/March/2026

DESIGNED BY: P. Baesso, D. Cussans, M. Aoulaiche

SIZE: A3 SHEET: 24 / 31

I2C LEVEL TRANSLATOR

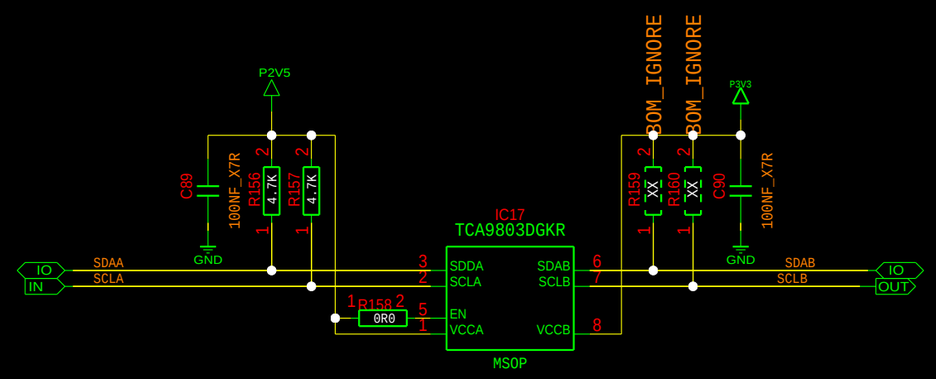

PROJECT: i2c_level_translate

PARTICLE PHYSICS

UNIVERSITY OF BRISTOL
H. H. WILLS PHYSICS LABORATORY
TYNDALL AVENUE, BS8 1TL
BRISTOL, UK

REVISION: 3

DATE MODIFIED: 2/March/2026

DESIGNED BY: P. Baesso, D. Cussans, M. Alouani

SIZE: A3 SHEET: 25 / 31

I2C LEVEL TRANSLATOR

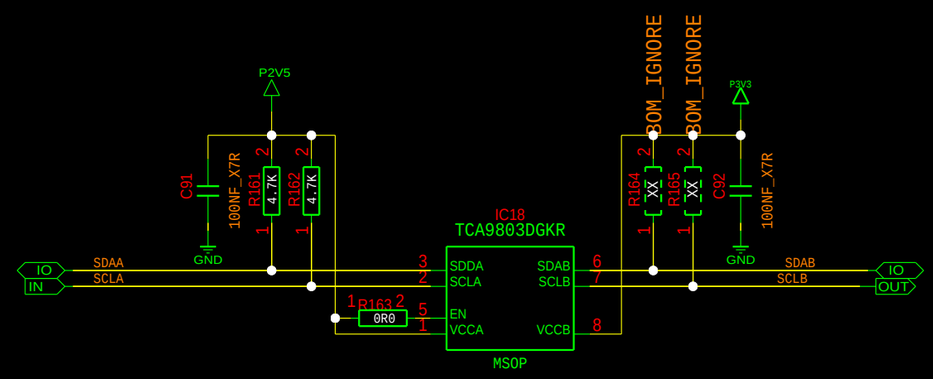

PROJECT:	i2c_level_translate		
PARTICLE PHYSICS UNIVERSITY OF BRISTOL H. H. WILLS PHYSICS LABORATORY TYNDALL AVENUE, BS8 1TL BRISTOL, UK	REVISION: 3	DATE MODIFIED: 2/March/2026	
	DESIGNED BY: P. Baesso, D. Cussans, M. Aboutabit	SIZE: A3	SHEET: 26 / 31
	I2C LEVEL TRANSLATOR		

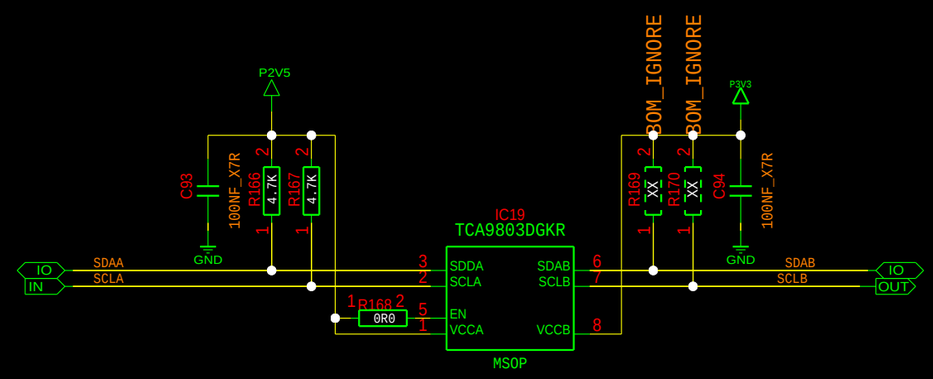

PROJECT: i2c_level_translate

PARTICLE PHYSICS

UNIVERSITY OF BRISTOL
H. H. WILLS PHYSICS LABORATORY
TYNDALL AVENUE, BS8 1TL
BRISTOL, UK

REVISION: 3

DATE MODIFIED: 2/March/2026

DESIGNED BY: P. Baesso, D. Cussans, M. Alouani

SIZE: A3 SHEET: 27 / 31

I2C LEVEL TRANSLATOR

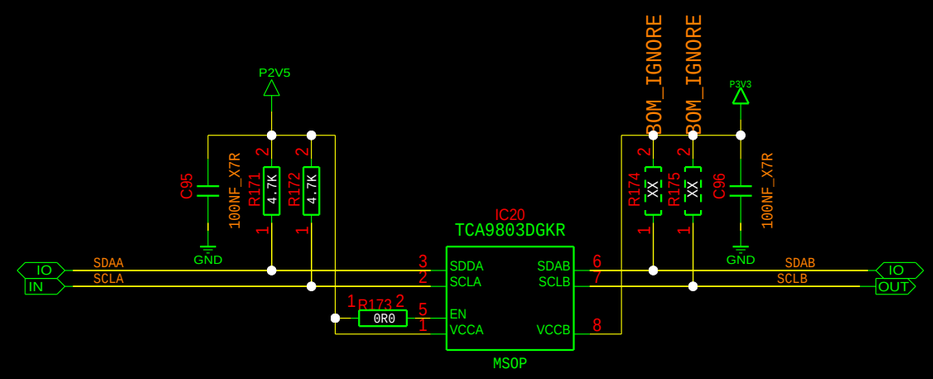

PROJECT: i2c_level_translate

PARTICLE PHYSICS

UNIVERSITY OF BRISTOL
H. H. WILLS PHYSICS LABORATORY
TYNDALL AVENUE, BS8 1TL
BRISTOL, UK

REVISION: 3

DATE MODIFIED: 2/March/2026

DESIGNED BY: P. Baesso, D. Cussans, M. Aboutabit

SIZE: A3 PAGE: 28 / 31

I2C LEVEL TRANSLATOR

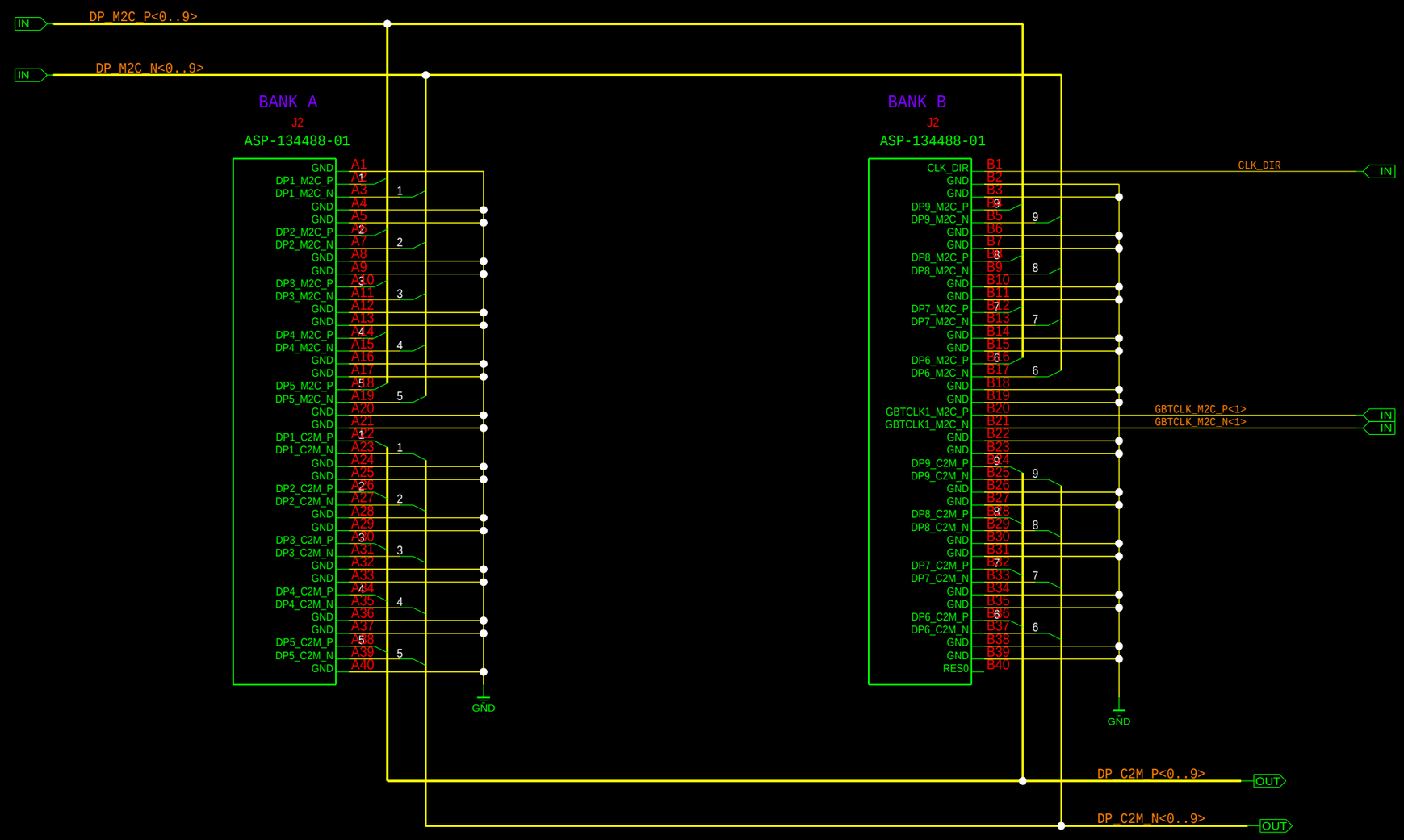

PROJECT:	fmc_hpc_generic		
PARTICLE PHYSICS UNIVERSITY OF BRISTOL H. H. WILLS PHYSICS LABORATORY TYNDALL AVENUE, BS8 1TL BRISTOL, UK	REVISION: 3	DATE MODIFIED: 2/March/2026	
	DESIGNED BY: P. Baesso, D. Cussans, M. Alouche	SHEET: 29 / 31	
	FMC HPC AB		

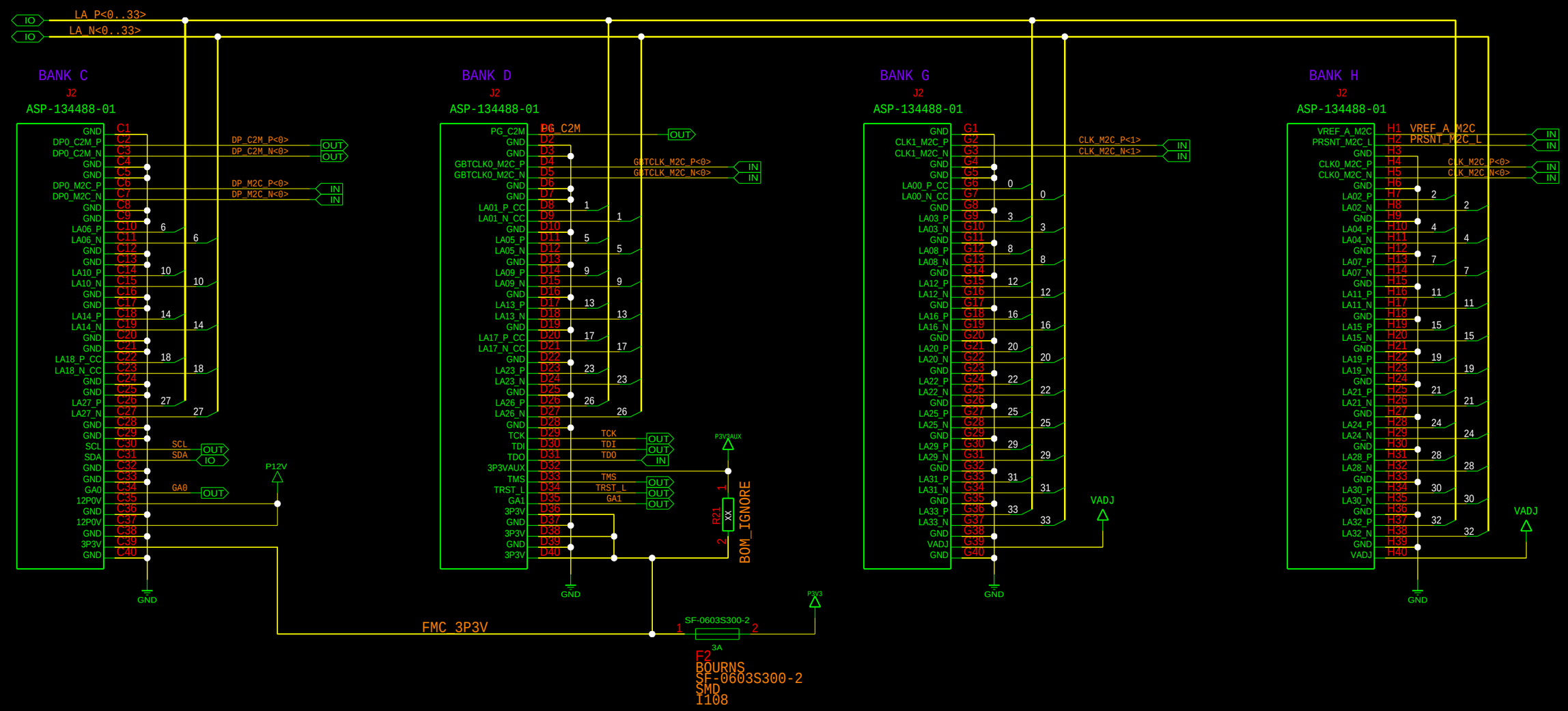

PROJECT:	fmc_hpc_generic		
PARTICLE PHYSICS UNIVERSITY OF BRISTOL H. H. WILLS PHYSICS LABORATORY TYNDALL AVENUE, BS8 1TL BRISTOL, UK	REVISION: 3	DATE MODIFIED: 2/March/2026	
	DESIGNED BY: P. Baesso, D. Cussans, M. Alcouit	SHEET: 30 / 31	
	FMC HPC CDGH		

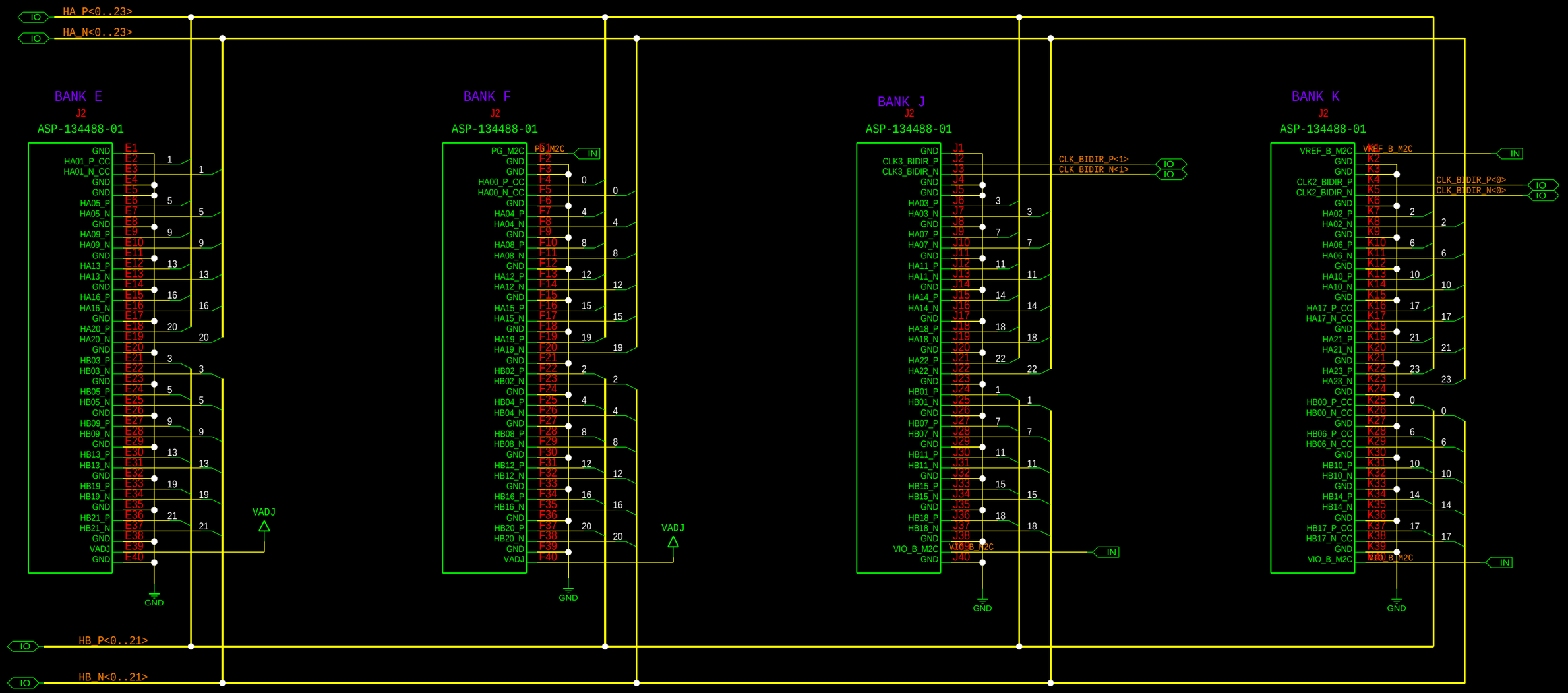

PROJECT: fmc_hpc_generic

PARTICLE PHYSICS

UNIVERSITY OF BRISTOL
H. H. WILLS PHYSICS LABORATORY
TYNDALL AVENUE, BS8 1TL
BRISTOL, UK

REVISION:	3	DATE MODIFIED:	2/March/2026
DESIGNED BY:	P. Baesso, D. Cussans, M. Alvarez	SHEET:	31 / 31

FMC HPC EFJK