pc070_aida_hdmi_dp_single

File: ../pc070_aida_hdmi_dp_single/pc070_aida_hdmi_dp_single.kicad_sch

pc070_aida_hdmi_dp_single5

File: ../pc070_aida_hdmi_dp_single/pc070_aida_hdmi_dp_single.kicad_sch

pc070_aida_hdmi_dp_single1

File: ../pc070_aida_hdmi_dp_single/pc070_aida_hdmi_dp_single.kicad_sch

pc070_aida_hdmi_dp_single4

File: ../pc070_aida_hdmi_dp_single/pc070_aida_hdmi_dp_single.kicad_sch

pc070_aida_hdmi_dp_single2

File: ../pc070_aida_hdmi_dp_single/pc070_aida_hdmi_dp_single.kicad_sch

pc070_aida_hdmi_dp_single3

File: ../pc070_aida_hdmi_dp_single/pc070_aida_hdmi_dp_single.kicad_sch

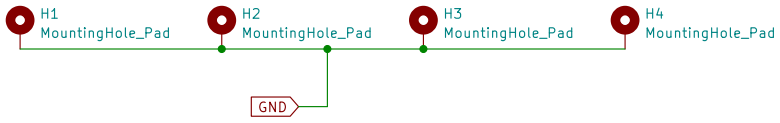

Sheet: /
File: pc070_aida_hdmi_dp.kicad_sch

Title:

Size: A4	Date:	**Rev:**
KiCad E.D.A. kicad 6.0.8-4.fc36		Id: 1/7

DisplayPort Standard Cable						
Source Side Plug			Cable Wiring	Sink Side Plug		
At SOURCE		Pin#		Pin#	At SINK	
Signal Type					Signal Type	
Out	ML_Lane 0(p)	1		1	ML_Lane 3 (n)	In
GND	GND	2		2	GND	GND
Out	ML_Lane 0 (n)	3		3	ML_Lane 3 (p)	In
Out	ML_Lane 1 (p)	4		4	ML_Lane 2 (n)	In
GND	GND	5		5	GND	GND
Out	ML_Lane 1 (n)	6		6	ML_Lane 2 (p)	In
Out	ML_Lane 2 (p)	7		7	ML_Lane 1 (n)	In
GND	GND	8		8	GND	GND
Out	ML_Lane 2 (n)	9		9	ML_Lane 1 (p)	In
Out	ML_Lane 3 (p)	10		10	ML_Lane 0 (n)	In
GND	GND	11		11	GND	GND
Out	ML_Lane 3 (n)	12		12	ML_Lane 0 (p)	In
GND[2]	GND	13		13	GND	GND[2]
GND[2]	GND	14		14	GND	GND[2]
I/O	AUX_CH (p)	15		15	AUX_CH (p)	I/O
GND	GND	16		16	GND	GND
I/O	AUX_CH (n)	17		17	AUX_CH (n)	I/O
In	Hot Plug Detect	18		18	Hot Plug Detect	Out
	Return DP_PWR	19		19	Return DP_PWR	
	DP_PWR	20	Not Wired	20	DP_PWR	

Pinout for AIDA-Innova TLU
(remember Display port cable
is cross-over for lanes 0-3)

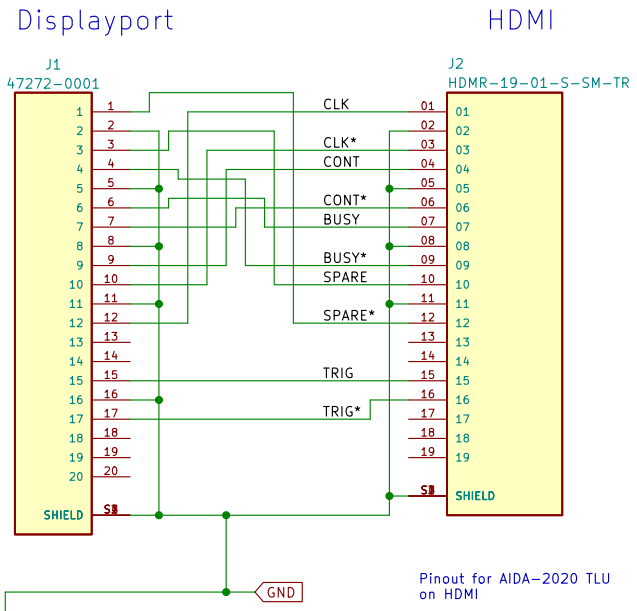

Pinout for AIDA-2020 TLU
on HDMI

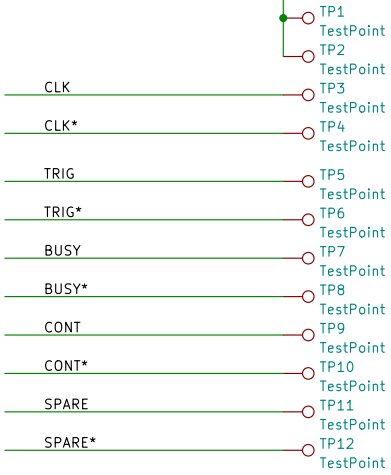

Sheet: /pc070_aida_hdmi_dp_single/
File: pc070_aida_hdmi_dp_single.kicad_sch

Title:

Size: A4	Date:	Rev:
KiCad E.D.A. kicad 6.0.8-4.fc36		Id: 2/7

DisplayPort Standard Cable						
Source Side Plug			Cable Wiring	Sink Side Plug		
At SOURCE		Pin#		Pin#	At SINK	
Signal Type					Signal Type	
Out	ML_Lane 0(p)	1		1	ML_Lane 3 (n)	In
GND	GND	2		2	GND	GND
Out	ML_Lane 0 (n)	3		3	ML_Lane 3 (p)	In
Out	ML_Lane 1 (p)	4		4	ML_Lane 2 (n)	In
GND	GND	5		5	GND	GND
Out	ML_Lane 1 (n)	6		6	ML_Lane 2 (p)	In
Out	ML_Lane 2 (p)	7		7	ML_Lane 1 (n)	In
GND	GND	8		8	GND	GND
Out	ML_Lane 2 (n)	9		9	ML_Lane 1 (p)	In
Out	ML_Lane 3 (p)	10		10	ML_Lane 0 (n)	In
GND	GND	11		11	GND	GND
Out	ML_Lane 3 (n)	12		12	ML_Lane 0 (p)	In
GND[2]	GND	13		13	GND	GND[2]
GND[2]	GND	14		14	GND	GND[2]
I/O	AUX_CH (p)	15		15	AUX_CH (p)	I/O
GND	GND	16		16	GND	GND
I/O	AUX_CH (n)	17		17	AUX_CH (n)	I/O
In	Hot Plug Detect	18		18	Hot Plug Detect	Out
	Return DP_PWR	19		19	Return DP_PWR	
	DP_PWR	20	Not Wired	20	DP_PWR	

Pinout for AIDA-Innova TLU
(remember Display port cable
is cross-over for lanes 0-3)

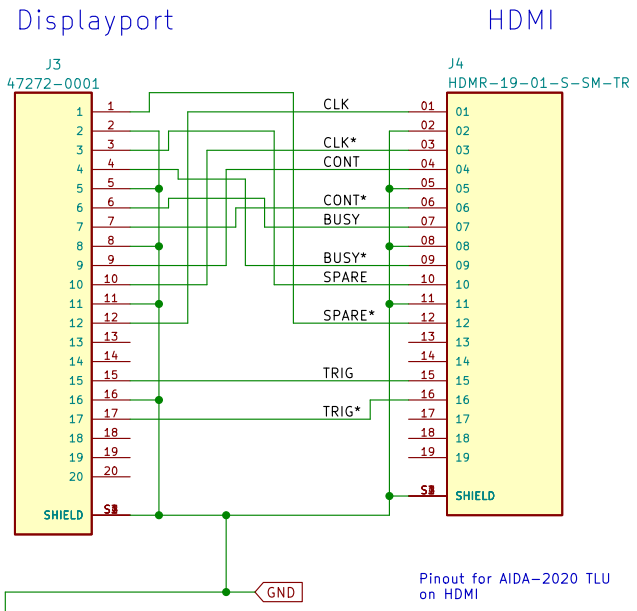

Pinout for AIDA-2020 TLU
on HDMI

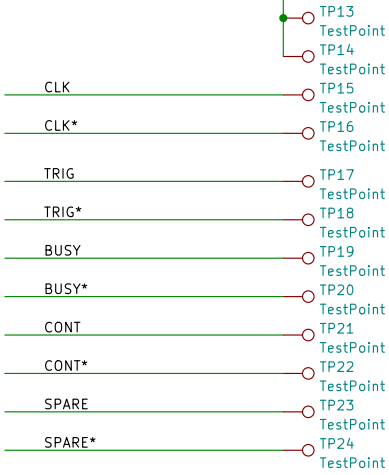

Sheet: /pc070_aida_hdmi_dp_single1/
File: pc070_aida_hdmi_dp_single.kicad_sch

Title:

Size: A4	Date:	Rev:
KiCad E.D.A. kicad 6.0.8-4.fc36		Id: 3/7

DisplayPort Standard Cable						
Source Side Plug			Cable Wiring	Sink Side Plug		
At SOURCE		Pin#		Pin#	At SINK	
Signal Type					Signal Type	
Out	ML_Lane 0(p)	1		1	ML_Lane 3 (n)	In
GND	GND	2		2	GND	GND
Out	ML_Lane 0 (n)	3		3	ML_Lane 3 (p)	In
Out	ML_Lane 1 (p)	4		4	ML_Lane 2 (n)	In
GND	GND	5		5	GND	GND
Out	ML_Lane 1 (n)	6		6	ML_Lane 2 (p)	In
Out	ML_Lane 2 (p)	7		7	ML_Lane 1 (n)	In
GND	GND	8		8	GND	GND
Out	ML_Lane 2 (n)	9		9	ML_Lane 1 (p)	In
Out	ML_Lane 3 (p)	10		10	ML_Lane 0 (n)	In
GND	GND	11		11	GND	GND
Out	ML_Lane 3 (n)	12		12	ML_Lane 0 (p)	In
GND[2]	GND	13		13	GND	GND[2]
GND[2]	GND	14		14	GND	GND[2]
I/O	AUX_CH (p)	15		15	AUX_CH (p)	I/O
GND	GND	16		16	GND	GND
I/O	AUX_CH (n)	17		17	AUX_CH (n)	I/O
In	Hot Plug Detect	18		18	Hot Plug Detect	Out
	Return DP_PWR	19		19	Return DP_PWR	
	DP_PWR	20	Not Wired	20	DP_PWR	

Pinout for AIDA-Innova TLU
(remember Display port cable
is cross-over for lanes 0-3)

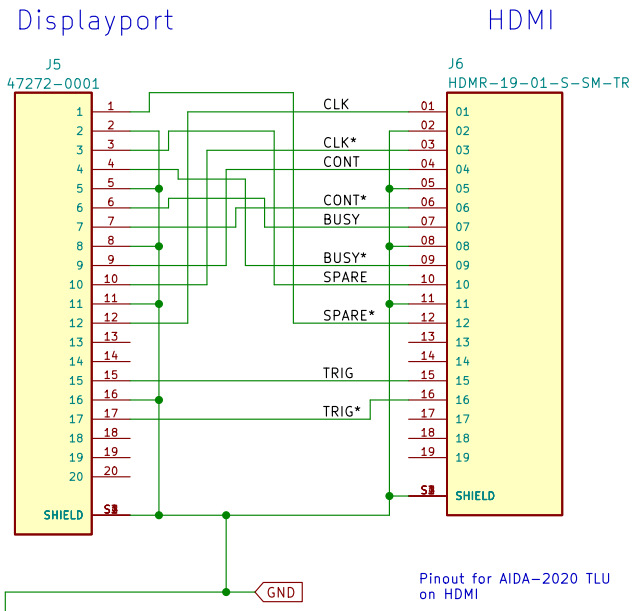

Pinout for AIDA-2020 TLU
on HDMI

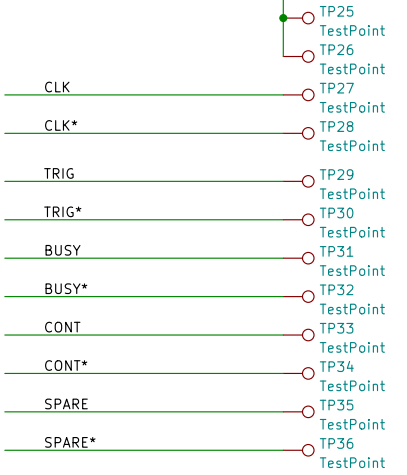

Sheet: /pc070_aida_hdmi_dp_single2/
File: pc070_aida_hdmi_dp_single.kicad_sch

Title:

Size: A4	Date:	Rev:
KiCad E.D.A. kicad 6.0.8-4.fc36		Id: 4/7

DisplayPort Standard Cable						
Source Side Plug			Cable Wiring	Sink Side Plug		
At SOURCE		Pin#		Pin#	At SINK	
Signal Type					Signal Type	
Out	ML_Lane 0(p)	1		1	ML_Lane 3 (n)	In
GND	GND	2		2	GND	GND
Out	ML_Lane 0 (n)	3		3	ML_Lane 3 (p)	In
Out	ML_Lane 1 (p)	4		4	ML_Lane 2 (n)	In
GND	GND	5		5	GND	GND
Out	ML_Lane 1 (n)	6		6	ML_Lane 2 (p)	In
Out	ML_Lane 2 (p)	7		7	ML_Lane 1 (n)	In
GND	GND	8		8	GND	GND
Out	ML_Lane 2 (n)	9		9	ML_Lane 1 (p)	In
Out	ML_Lane 3 (p)	10		10	ML_Lane 0 (n)	In
GND	GND	11		11	GND	GND
Out	ML_Lane 3 (n)	12		12	ML_Lane 0 (p)	In
GND[2]	GND	13		13	GND	GND[2]
GND[2]	GND	14		14	GND	GND[2]
I/O	AUX_CH (p)	15		15	AUX_CH (p)	I/O
GND	GND	16		16	GND	GND
I/O	AUX_CH (n)	17		17	AUX_CH (n)	I/O
In	Hot Plug Detect	18		18	Hot Plug Detect	Out
	Return DP_PWR	19		19	Return DP_PWR	
	DP_PWR	20	Not Wired	20	DP_PWR	

Pinout for AIDA-Innova TLU
(remember Display port cable
is cross-over for lanes 0-3)

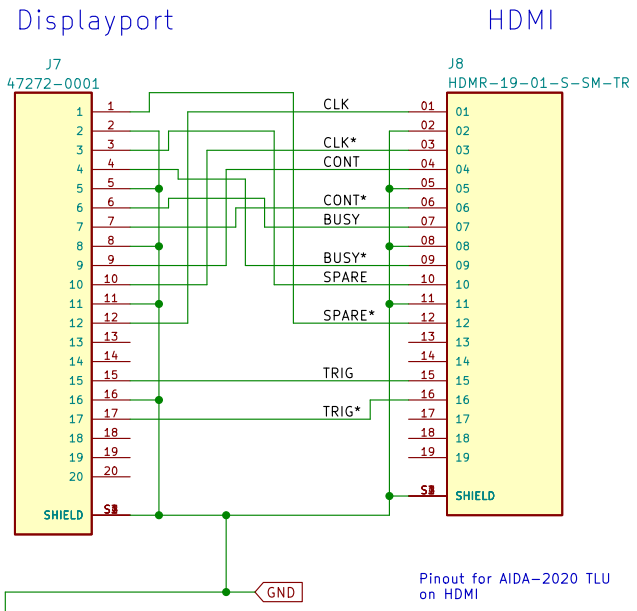

Pinout for AIDA-2020 TLU
on HDMI

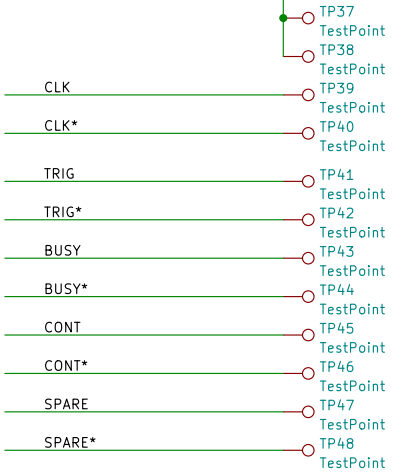

Sheet: /pc070_aida_hdmi_dp_single5/
File: pc070_aida_hdmi_dp_single.kicad_sch

Title:

Size: A4	Date:	Rev:
KiCad E.D.A. kicad 6.0.8-4.fc36		Id: 5/7

DisplayPort Standard Cable					
Source Side Plug			Cable Wiring	Sink Side Plug		
At SOURCE		Pin#		Pin#	At SINK	
Signal Type					Signal Type	
Out	ML_Lane 0(p)	1		1	ML_Lane 3 (n)	In
GND	GND	2		2	GND	GND
Out	ML_Lane 0 (n)	3		3	ML_Lane 3 (p)	In
Out	ML_Lane 1 (p)	4		4	ML_Lane 2 (n)	In
GND	GND	5		5	GND	GND
Out	ML_Lane 1 (n)	6		6	ML_Lane 2 (p)	In
Out	ML_Lane 2 (p)	7		7	ML_Lane 1 (n)	In
GND	GND	8		8	GND	GND
Out	ML_Lane 2 (n)	9		9	ML_Lane 1 (p)	In
Out	ML_Lane 3 (p)	10		10	ML_Lane 0 (n)	In
GND	GND	11		11	GND	GND
Out	ML_Lane 3 (n)	12		12	ML_Lane 0 (p)	In
GND[2]	GND	13		13	GND	GND[2]
GND[2]	GND	14		14	GND	GND[2]
I/O	AUX_CH (p)	15		15	AUX_CH (p)	I/O
GND	GND	16		16	GND	GND
I/O	AUX_CH (n)	17		17	AUX_CH (n)	I/O
In	Hot Plug Detect	18		18	Hot Plug Detect	Out
	Return DP_PWR	19		19	Return DP_PWR	
	DP_PWR	20	Not Wired	20	DP_PWR	

Pinout for AIDA-Innova TLU
(remember Display port cable
is cross-over for lanes 0-3)

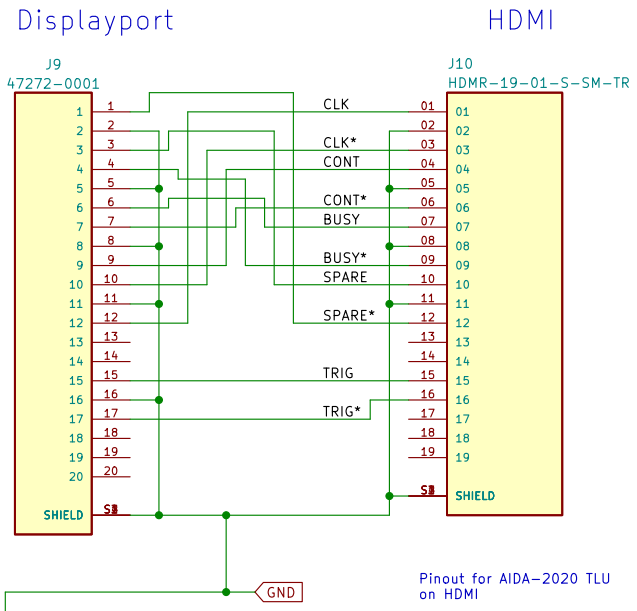

Pinout for AIDA-2020 TLU
on HDMI

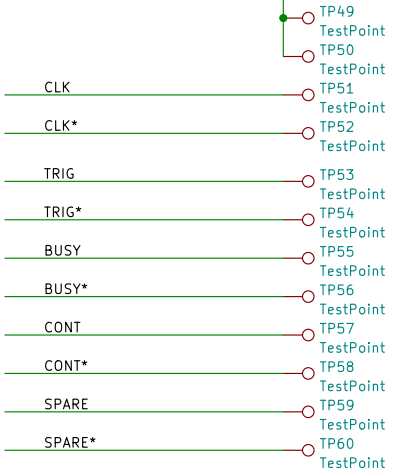

Sheet: /pc070_aida_hdmi_dp_single4/
File: pc070_aida_hdmi_dp_single.kicad_sch

Title:

Size: A4	Date:	Rev:
KiCad E.D.A. kicad 6.0.8-4.fc36		Id: 6/7

DisplayPort Standard Cable					
Source Side Plug			Cable Wiring	Sink Side Plug	
At SOURCE		Pin#		Pin#	At SINK
Signal Type					Signal Type
Out	ML_Lane 0(p)	1		1	ML_Lane 3 (n)	In
GND	GND	2		2	GND	GND
Out	ML_Lane 0 (n)	3		3	ML_Lane 3 (p)	In
Out	ML_Lane 1 (p)	4		4	ML_Lane 2 (n)	In
GND	GND	5		5	GND	GND
Out	ML_Lane 1 (n)	6		6	ML_Lane 2 (p)	In
Out	ML_Lane 2 (p)	7		7	ML_Lane 1 (n)	In
GND	GND	8		8	GND	GND
Out	ML_Lane 2 (n)	9		9	ML_Lane 1 (p)	In
Out	ML_Lane 3 (p)	10		10	ML_Lane 0 (n)	In
GND	GND	11		11	GND	GND
Out	ML_Lane 3 (n)	12		12	ML_Lane 0 (p)	In
GND[2]	GND	13		13	GND	GND[2]
GND[2]	GND	14		14	GND	GND[2]
I/O	AUX_CH (p)	15		15	AUX_CH (p)	I/O
GND	GND	16		16	GND	GND
I/O	AUX_CH (n)	17		17	AUX_CH (n)	I/O
In	Hot Plug Detect	18		18	Hot Plug Detect	Out
	Return DP_PWR	19		19	Return DP_PWR	
	DP_PWR	20	Not Wired	20	DP_PWR	

Pinout for AIDA-Innova TLU
(remember Display port cable
is cross-over for lanes 0-3)

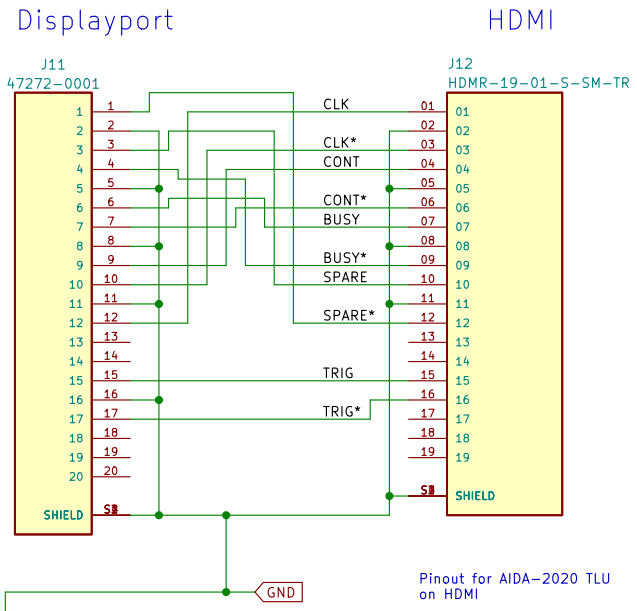

Pinout for AIDA-2020 TLU
on HDMI

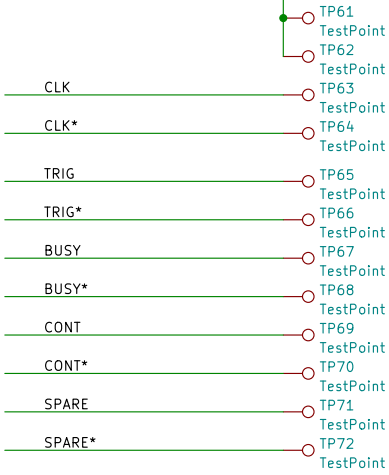

Sheet: /pc070_aida_hdmi_dp_single3/
File: pc070_aida_hdmi_dp_single.kicad_sch

Title:

Size: A4	Date:	Rev:
KiCad E.D.A. kicad 6.0.8-4.fc36		Id: 7/7