Property of CERN - For Internal Use Only – External Distribution Prohibited

MicroTCA™

PICMG® Specification MTCA.0 R1.0

Micro Telecommunications Computing Architecture Base Specification

July 6, 2006

Property of CERN - For Internal Use Only – External Distribution Prohibited

© Copyright 2006, PCI Industrial Computer Manufacturers Group.

The attention of adopters is directed to the possibility that compliance with or adoption of PICMG® specifications may require use of an invention covered by patent rights. PICMG® shall not be responsible for identifying patents for which a license may be required by any PICMG® specification or for conducting legal inquiries into the legal validity or scope of those patents that are brought to its attention. PICMG® specifications are prospective and advisory only. Prospective users are responsible for protecting themselves against liability for infringement of patents.

NOTICE:

The information contained in this document is subject to change without notice. The material in this document details a PICMG® specification in accordance with the license and notices set forth on this page. This document does not represent a commitment to implement any portion of this specification in any company's products.

WHILE THE INFORMATION IN THIS PUBLICATION IS BELIEVED TO BE ACCURATE, PICMG® MAKES NO WARRANTY OF ANY KIND, EXPRESS OR IMPLIED, WITH REGARD TO THIS MATERIAL INCLUDING, BUT NOT LIMITED TO, ANY WARRANTY OF TITLE OR OWNERSHIP, IMPLIED WARRANTY OF MERCHANTABILITY OR WARRANTY OF FITNESS FOR PARTICULAR PURPOSE OR USE.

In no event shall PICMG® be liable for errors contained herein or for indirect, incidental, special, consequential, reliance or cover damages, including loss of profits, revenue, data or use, incurred by any user or any third party. Compliance with this specification does not absolve manufacturers of CompactPCI® Express equipment from the requirements of safety and regulatory agencies (UL, CSA, FCC, IEC, etc.).

PICMG®, CompactPCI®, AdvancedTCA®, ATCA®, CompactPCI® Express and the PICMG, CompactPCI, AdvancedTCA and ATCA logos are registered trademarks, and COM Express™, MicroTCA™, µTCA™, CompactTCA™, AdvancedMC™ and SHB Express™ are trademarks of the PCI Industrial Computer Manufacturers Group. All other brand or product names may be trademarks or registered trademarks of their respective holders.

Property of CERN - For Internal Use Only – External Distribution Prohibited

Contents

1 Introduction and objectives 1-1

1.1 Overview 1-1
1.2 Introduction 1-1
1.2.1 Scope 1-2
1.2.2 MicroTCA implementation options 1-2
1.2.3 Design goals 1-2
1.2.4 Elements of MicroTCA 1-3
1.2.5 Theory of operation 1-8
1.3 MicroTCA enclosure types 1-9
1.3.1 Single-Tier Shelf implementation 1-10
1.3.2 Two-Tier mixed-width Shelf implementation 1-10
1.3.3 Two-Tier fixed Single-Width Shelf implementation 1-10
1.3.4 Back-to-Back Shelf implementation 1-10
1.3.5 Cube Shelf implementation 1-11
1.3.6 Pico Shelf implementations 1-11
1.3.7 Other implementation options 1-11
1.4 Application examples 1-11
1.4.1 Base Station 1-12
1.4.2 Router 1-12
1.4.3 VoIP node 1-12
1.4.4 Other Telecom Network applications 1-12
1.4.5 Enterprise applications 1-13
1.4.6 Other applications 1-13
1.4.7 Consumer applications 1-13
1.5 Special word usage 1-13
1.6 Conformance 1-14
1.7 Dimensions 1-14
1.8 Regulatory guidelines 1-14
1.9 Reference specifications 1-15
1.10 MicroTCA.0 Specification contributors 1-16
1.11 Name and logo usage 1-16
1.12 Intellectual property 1-17
1.12.1 Necessary claims 1-18
1.12.2 Unnecessary claims 1-18
1.12.3 Third party disclosures 1-19
1.13 Glossary 1-19

2 Mechanical 2-1

2.1 Mechanical overview 2-1
2.1.1 Terminology 2-2
2.1.2 Typical arrangement examples 2-2
2.2 Dimensions, tolerances, drawing symbols, and nomenclature 2-6
2.3 Mechanical concept 2-8
2.4 AdvancedMC Module orientation, location, and positioning 2-16
2.4.1 Module orientation 2-16
2.4.2 Module positioning, horizontal—mandatory 2-17
2.4.3 Module positioning, vertical—mandatory 2-19
2.4.4 Module positioning, depth—mandatory 2-20

Property of CERN - For Internal Use Only – External Distribution Prohibited

2.5 Slot detail dimensions 2-21
2.5.1 Slot 2-21
2.5.2 Slot configurations, subdividing Slots 2-21
2.5.3 Card Guide, Strut, and Card Guide Support Plate (CGSP) 2-23
2.5.4 Optional Subrack attachment plane 2-31
2.5.5 AdvancedMC Module—optional locking 2-33
2.6 Backplane 2-35
2.7 Subrack dimensions 2-40
2.7.1 Mandatory Subrack 2-41
2.8 Shelf 2-46
2.8.1 Shelf types 2-47
2.8.2 Shelf width and height 2-48
2.8.3 Shelf depth 2-48
2.8.4 Air filter provision 2-49
2.8.5 ESD wrist strap interface 2-49
2.8.6 Shelf alarm LEDs 2-50
2.9 Cable management 2-51
2.10 Power entry/Power Module 2-55
2.10.1 Power Module PCB dimensions 2-57
2.10.2 Power Module component height 2-62
2.10.3 Power Module Face Plate 2-63
2.10.4 Power Module Handle/Latch mechanism 2-66
2.10.5 Power Module LEDs 2-66
2.10.6 Power Module EMC gasketing 2-66
2.10.7 Power Module safety covers 2-66
2.10.8 Power Module labels 2-67
2.10.9 Power Module Backplane Connector 2-67
2.11 MCH Module 2-68
2.11.1 Module types 2-68
2.11.2 MCH PCB dimensions 2-69
2.11.3 MCH Subrack Slot details 2-76
2.11.4 Plug Connector 2-78
2.11.5 Sequencing and contact area 2-80
2.11.6 MCH positioning 2-82
2.12 Air flow management 2-83
2.13 Auxiliary Connector (Zone 2 and Zone 3) keying 2-83
2.13.1 Component keep-in height 2-84
2.13.2 Connector keep-in height 2-85
2.13.3 Keying block 2-86
2.13.4 Keying block with electrical connections 2-87
2.13.5 AMC.0 electrically compatible keying block 2-88
2.14 MicroTCA Cube 2-90
2.15 MicroTCA Pico 2-91
2.16 MicroTCA filler panels 2-91
2.17 Cooling Units (CUs) 2-92
2.18 Subrack/Shelf/Cube/Pico performance 2-93
2.18.1 Load carrying 2-93
2.18.2 Insertion cycles 2-93
2.18.3 ESD 2-93
2.18.4 EMC 2-94

Property of CERN - For Internal Use Only – External Distribution Prohibited

2.18.5 Safety 2-94
2.18.6 Physical Slot and Tier numbering 2-94
2.19 Subrack/Shelf environmental 2-97
2.19.1 Subrack shock and vibration 2-97
2.19.2 Earthquake 2-97
2.19.3 Flammability 2-97
2.19.4 Atmospheric 2-97
2.19.5 Thermal 2-98
2.19.6 Acoustic 2-98
2.19.7 Surface temperatures 2-98
2.20 References 2-98

3 Hardware platform management 3-1

3.1 Overview 3-1
3.1.1 MicroTCA Carrier model 3-1
3.1.2 MicroTCA management architecture 3-2
3.1.3 Relationship with IPMI, AdvancedMC, and AdvancedTCA 3-7
3.1.4 Key differences from PICMG 3.0 and AMC.0 specifications 3-7
3.1.5 PICMG properties and FRU Device ID assignments 3-9
3.2 Management-related interconnects 3-11
3.2.1 AdvancedMC interconnects 3-11
3.2.2 Power Module and Cooling Unit interconnects 3-13
3.2.3 Guidelines for OEM Module interconnects and management 3-14
3.2.4 Carrier FRU Information device requirements 3-15
3.2.5 MicroTCA Carrier interconnects 3-19
3.3 Carrier Manager 3-20
3.3.1 MCH Face Plate indicators 3-22
3.3.2 MCH Payload Interface 3-22
3.3.3 Carrier Manager IP address 3-22
3.3.4 IPMI event support 3-24
3.3.5 Redundant MCH operation 3-25
3.3.6 Addressing 3-26
3.3.7 Carrier Number 3-29
3.3.8 Location information 3-31
3.4 Shelf Manager 3-38
3.4.1 Shelf Manager configuration options 3-38
3.4.2 Differences from the AdvancedTCA Shelf Manager 3-40
3.4.3 Shelf-Carrier Manager Interface 3-42
3.4.4 Shelf Manager IP address 3-44
3.5 MCMC requirements 3-45
3.6 EMMC requirements 3-47
3.7 Operational state management 3-48
3.7.1 Carrier Manager start up 3-48
3.7.2 Shelf Manager actions on Carrier detection 3-48
3.7.3 Normal Shelf operation 3-48
3.7.4 Abnormal situation handling 3-49
3.8 Power management 3-49
3.8.1 Power Channel mapping 3-50
3.8.2 MicroTCA Carrier Power Management records 3-51
3.8.3 Early power management 3-56

Property of CERN - For Internal Use Only – External Distribution Prohibited

3.8.4 Normal power management 3-57
3.8.5 Power management commands and sensors 3-60
3.8.6 Abnormal power condition handling....3-68
3.9 Cooling management....3-70
3.9.1 Fan geography....3-70
3.9.2 Cooling control....3-72
3.9.3 Normal cooling operation....3-73
3.9.4 Abnormal cooling operation....3-73
3.9.5 Fan tachometer sensors....3-74
3.9.6 Temperature sensors....3-74
3.10 Electronic Keying....3-75
3.10.1 MicroTCA Carrier point-to-point connectivity information 3-76
3.10.2 Module point-to-point connectivity information 3-78
3.10.3 AMC Port State commands 3-79
3.10.4 Clock E-Keying 3-79
3.11 Telco alarm management....3-80
3.12 System Event Log....3-87
3.13 Sensor management 3-87
3.13.1 Guidelines and requirements for FRU sensor events....3-87
3.13.2 MCMC SDR requirements....3-88
3.13.3 EMMC SDR requirements 3-89
3.13.4 Carrier Manager SDR requirements....3-89
3.14 FRU Information 3-92
3.14.1 EMMC FRU Information 3-92
3.14.2 MCMC FRU Information 3-92
3.14.3 MicroTCA Carrier FRU Information 3-93
3.14.4 Shelf FRU Information 3-93
3.15 IPMI message bridging....3-94
3.15.1 Message bridging process....3-94
3.16 IPMI functions and commands 3-95
3.16.1 Required IPMI functions 3-96
3.16.2 Command assignments....3-98
3.17 FRU records, sensors, and Entity IDs 3-109

4 Power....4-1

4.1 Overview....4-1
4.2 Loads on the Power Subsystem....4-2
4.2.1 MicroTCA Carrier Hub (MCH)....4-2
4.2.2 Cooling Units 4-7
4.2.3 Advanced Mezzanine Cards....4-10
4.3 Power architecture....4-13
4.3.1 Basic functionality....4-13
4.3.2 Partitioning of the Power Subsystem....4-15
4.3.3 Power sources....4-15
4.3.4 Power Subsystem redundancy....4-16
4.3.5 System Grounding considerations....4-21
4.3.6 Power distribution and backplane considerations....4-23
4.4 Control and monitoring of the Power Subsystem 4-24
4.4.1 PM-EMMCs 4-24
4.4.2 Geographic Address....4-24

Property of CERN - For Internal Use Only – External Distribution Prohibited

4.4.3 IPMB-0 4-24
4.4.4 PS1_[Slot]# 4-25
4.4.5 EN_[Slot]# 4-25
4.4.6 PWRON_[Slot] 4-25
4.4.7 PS_PM# 4-26
4.4.8 PM-EMMC watchdog timer 4-26
4.4.9 Power Module OK 4-27
4.4.10 Power Module Reset 4-27
4.4.11 System power-up 4-27
4.4.12 Input voltage sensors 4-29
4.4.13 Temperature sensors 4-29
4.4.14 Power Module Extraction Switch 4-30
4.4.15 Blue LED 4-30
4.4.16 LED1 4-31
4.4.17 Other LEDs 4-31
4.5 Connectors 4-31
4.5.1 Power Module Output Connector 4-32
4.5.2 Power Module Input Connectors 4-32
4.6 Single-Width, Full-Height Power Module 4-33
4.6.1 Inputs 4-34
4.6.2 Outputs 4-35
4.6.3 Bulk supply current limit 4-38
4.6.4 Control and monitoring 4-38
4.6.5 Redundancy 4-38
4.6.6 Mechanical 4-45
4.6.7 Thermals 4-45
4.6.8 Regulatory 4-45
4.7 Other mechanical considerations 4-46
4.7.1 Double-Width form factor 4-46
4.7.2 Form factors other than Full-Height 4-46
4.8 Power source considerations 4-46
4.8.1 DC power feeds 4-47
4.8.2 AC power feeds 4-55
4.9 References 4-60

5 Thermal 5-1

5.1 Overview 5-1
5.2 AMC.0 Modules and MicroTCA 5-1
5.3 AMC.0 Carriers and MicroTCA 5-1
5.4 Subrack Slot 5-2
5.5 Airflow path 5-3
5.6 AMC.0 Modules and power dissipation 5-3
5.7 MicroTCA system cooling configuration 5-4
5.8 Air distribution in a Slot 5-4
5.9 Air inlet and exhaust 5-5
5.10 Slot cooling capability 5-5
5.11 Module cooling requirements 5-6
5.12 Standard air 5-7
5.12.1 Derivation 5-7
5.12.2 Barometric changes due to weather 5-7

Property of CERN - For Internal Use Only – External Distribution Prohibited

5.13 Slot impedance curve 5-8
5.14 Slot fan flow curve 5-8
5.15 Cooling Unit failure 5-8
5.16 Filters 5-9
5.17 System sensors 5-9
5.18 Thermal and operating environment 5-10
5.19 Thermal and cabling 5-10
5.20 Simulation and impedance testing 5-10
5.20.1 AdvancedMC/MCH reference Module 5-11
5.20.2 Power Unit reference Module 5-12
5.21 Simulation environment 5-12
5.22 Thermal dynamic modeling 5-13
5.23 Fluid networking modeling 5-13
5.24 Acoustic noise 5-13
5.25 Surface temperature 5-14
5.26 Design recommendations 5-15
5.27 Cooling limitations and examples 5-17
5.28 References 5-22

6 Interconnect 6-1

6.1 Introduction 6-1
6.2 Fabric interface 6-2
6.2.1 Backplane fabric interface support requirements 6-2
6.2.2 MCH fabric interface support requirements 6-4
6.3 MCH Specific Interfaces 6-4
6.3.1 MCH update Channel interface 6-4
6.3.2 MCH cross-over Channel interface 6-5
6.3.3 MCH PWR_ON interface 6-6
6.3.4 Inter-MCH IPMB-L interface 6-7
6.4 Synchronization clock interface 6-7
6.4.1 Signal descriptions 6-8
6.4.2 Clock architectures 6-9
6.4.3 Non-Telecom and Telecom clocks 6-13
6.5 JTAG interface 6-13
6.5.1 JSM Overview 6-14
6.5.2 JSM Signaling Overview 6-16
6.5.3 JSM Interface to MCH1 6-17
6.5.4 JSM Interface to MCH2 6-18
6.5.5 JSM Interface to AdvancedMCs 6-19
6.5.6 JSM Interface to Power Modules 6-22
6.5.7 JSM Master Mode Selection 6-23
6.5.8 JSM Interface to External Tester 6-24
6.5.9 MCH JTAG 6-26
6.5.10 Power Module JTAG 6-27
6.6 MicroTCA Interface topologies 6-27
6.6.1 Topology models 6-28
6.6.2 Correlation to AdvancedMC fabric regions 6-29
6.7 MCH Connector pin allocation 6-30
6.7.1 Pin naming conventions 6-31
6.7.2 Fabric interface naming conventions 6-31

Property of CERN - For Internal Use Only – External Distribution Prohibited

6.7.3 Synchronization clock interface naming convention 6-31
6.7.4 MCH Connector pin list 6-32
6.8 System examples 6-38
6.8.1 Redundant MicroTCA system 6-38
6.8.2 Variant redundant MicroTCA interconnect 6-41
6.8.3 Non-redundant MicroTCA system 6-45

7 Connectors 7-1

7.1 General information 7-1
7.2 AdvancedMC Backplane Connectors 7-1
7.2.1 AdvancedMC Backplane Connector pin list 7-2
7.2.2 AdvancedMC Backplane Connector dimensions 7-2
7.2.3 AdvancedMC Backplane Connector PCB layout 7-6
7.2.4 AdvancedMC Backplane Connector electrical characteristics 7-10
7.2.5 AdvancedMC Backplane Connector high-speed characteristics 7-14
7.2.6 AdvancedMC Backplane Connector mechanical characteristics 7-18
7.3 MicroTCA Carrier Hub Connectors 7-19
7.3.1 MicroTCA Carrier Hub Connector pin list 7-19
7.3.2 MicroTCA Carrier Hub mating interface design 7-20
7.3.3 MicroTCA Carrier Hub Backplane Connector 7-22
7.3.4 MicroTCA Carrier Hub Connector Backplane PCB layout 7-23
7.3.5 MicroTCA Carrier Hub Connector electrical characteristics 7-24
7.3.6 MicroTCA Carrier Hub Connector high-speed characteristics 7-25
7.3.7 MicroTCA Carrier Hub Connector mechanical characteristics 7-29
7.4 Power Module Output Connector 7-31
7.4.1 Power Module Output Connector pin list and mating sequence 7-31
7.4.2 Power Module Output Connector dimensions 7-32
7.4.3 Power Module Output Connector Backplane PCB layout 7-34
7.4.4 Electrical characteristics for Power Module Output Connector 7-36
7.4.5 Power Module Output Connector mechanical characteristics 7-39
7.5 Power Module Input Connector 7-41
7.5.1 Power Module Input Connector pin list and mating sequence 7-41
7.5.2 Power Module Input Connector dimensions 7-42
7.5.3 Electrical characteristics for Power Module Input Connector 7-47
7.5.4 Power Module Input Connector mechanical characteristics 7-51
7.6 AdvancedMC Auxiliary Connector 7-53
7.7 Test schedule 7-54
7.7.1 Specimen measurement arrangements 7-54
7.7.2 Test schedule tables 7-64
7.8 References 7-79

8 Regulatory requirements and industry standard guidelines 8-1

8.1 Regulatory 8-1
8.1.1 Safety 8-1
8.1.2 Electromagnetic compatibility 8-2
8.1.3 Ecology standards 8-2
8.2 Telecommunications industry standards requirements 8-3
8.2.1 EMC/safety requirements for the telecommunications industry 8-3
8.2.2 Environmental requirements for the telecommunications industry 8-4
8.3 Reliability/MTBF standards 8-7

Property of CERN - For Internal Use Only – External Distribution Prohibited

8.4 Cross reference list 8-7
8.5 FRU test guidelines 8-7
8.5.1 FRU safety test 8-8
8.5.2 FRU EMC testing 8-8
8.5.3 FRU environmental testing 8-9

A Module mis-insertion considerations A-1

A.1 MCH Module mis-insertion combinations A-2
A.2 AdvancedMC Module mis-insertion combinations A-5
A.3 Power management implications A-8
A.4 System management implications A-8
A.4.1 Optional MMC instance on MCH Module A-9
A.4.2 Using an AdvancedMC in an MCH Slot A-13
A.4.3 Using an MCH in an AdvancedMC Slot A-15
A.4.4 Detecting mis-insertions A-16
A.5 Hardware implications A-19
A.5.1 GND pins at same locations A-20
A.5.2 PS0# and PS1# pins at same locations A-23
A.5.3 PWR and MP pins at same locations A-27
A.5.4 PWR_ON pin A-29
A.5.5 GA[2:0] pins at same locations A-31
A.5.6 ENABLE# pin at same location A-35
A.5.7 SDA_L and SCL_L pins A-37
A.5.8 JTAG pins A-38
A.5.9 Cross-over pins A-39
A.5.10 TMREQ#, I2C_SDA, and I2C_SCL pins A-39

B Requirement list B-1

Property of CERN - For Internal Use Only – External Distribution Prohibited

Figures

1-1 Potential MicroTCA application space 1-1
1-2 MicroTCA block diagram....1-3
1-3 AdvancedMC Module configuration examples....1-4
1-4 MicroTCA Carrier Hub block diagram (12 AdvancedMCs/48 Lanes) 1-5
1-5 MicroTCA packaging illustration 1-9
2-1 Overview example 2-2
2-2 Shelf examples for Single-Width (75 mm) and Double-Width (150 mm) AdvancedMC Modules....2-3
2-3 Shelf detail example....2-3
2-4 Multiple Shelves in a Frame example 2-4
2-5 Single Cube on a mounting plate example 2-4
2-6 Multiple Shelves in a Frame example 2-5
2-7 Pico on a panel example....2-5
2-8 Pico on a motherboard host example 2-5
2-9 MicroTCA Subrack/Backplane/Face Plate grid—front view....2-9
2-10 Shelf definition—front view 2-10
2-11 Cube definition—front view 2-10
2-12 Pico definition—front view 2-11
2-13 Simplex MicroTCA array—front view....2-11
2-14 Mechanical mandatory grid, Single-Width—front view 2-11
2-15 Mechanical mandatory grid, Double-Width—front view 2-12
2-16 Mechanical mandatory grid, optional interpretation—front view 2-12
2-17 Mechanical optional grid, Single-Width—front view....2-13
2-18 Mechanical optional grid, Double-Width—front view 2-13
2-19 Mechanical optional grid, optional interpretation—front view 2-14
2-20 Mechanical optional grid—front view 2-14
2-21 MicroTCA Shelf, flush-mounted in a Frame, 300mm Depth—side view....2-15
2-22 MicroTCA Shelf, recess-mounted in a Frame, 300mm Depth—side view....2-15
2-23 MicroTCA Shelf in a Frame, 600 depth (single Shelves back-to-back)—side view 2-16
2-24 Full-Height Module positioning....2-17
2-25 Mid-Size Module positioning 2-18
2-26 Half-Height Module positioning 2-18
2-27 AMC.0 Subrack/Module interfaces (mandatory description)—side view 2-19
2-28 Subrack for Single-Width (75 mm) Modules 2-19
2-29 Subrack for Double-Width (150 mm) Modules....2-20
2-30 Mixed Subrack for 75 mm/150 mm Modules 2-20
2-31 Subrack with AMC.0 Module—top view....2-21
2-32 AMC.0 Module types....2-22
2-33 Double-Width, Full-Height Slot dividing examples 2-22
2-34 Single-Width, Full-Height Slot dividing examples 2-22
2-35 Card Guide definition, Single-Width/Double-Width/Mid-Size AdvancedMC Modules—front view....2-24
2-36 Card Guide definition, two Single-Width Modules in a Double-Width Subrack....2-25
2-37 Example of a Card Guide Support Plate (CGSP) 2-26
2-38 Example of a Position A Card Guide Support Plate, Strut, and Card Guide....2-27
2-39 Lock and ESD contact interface dimensions—Half-Height Module 2-28
2-40 Lock and ESD clip interface dimensions—Full-Height Module 2-29
2-41 Subrack EMC interfaces, mandatory dimensions—detail view....2-30

Property of CERN - For Internal Use Only – External Distribution Prohibited

2-42 Subrack/Module interface w/optional filler panel, description—side view 2-31
2-43 Subrack/Module interface w/optional filler panel, dimensions—side view 2-32
2-44 Subrack/Module interface w/optional filler panel, dimensions—front view 2-32
2-45 Subrack/Module interface w/optional locking, Description 1—side view 2-33
2-46 Subrack/Module interface w/optional locking, Description 2—side view 2-34
2-47 Subrack/Module interface w/optional locking, dimensions—side view 2-34
2-48 Subrack/Module interface w/optional locking, dimensions—side view 2-35
2-49 Example of a Backplane 2-36
2-50 Optional Backplane mounting, description 2-36
2-51 Optional Backplane mounting for Single-Width Modules, dimensions 2-37
2-52 Optional Backplane mounting, dimensions for Tier 1 of Double-Width AdvancedMC Modules 2-37
2-53 Optional Backplane mounting, dimensions for two Tiers of connected Single-Width or mix of Single-/Double-Width AdvancedMC Modules 2-38
2-54 Backplane Zone 3 feature—side view 2-38
2-55 Recommended Backplane mounting positions—rear view 2-39
2-56 Connector pin location at the backplane—front view 2-40
2-57 Mandatory Subrack for Full-Height, Full-Width AMC.0 Modules—front view 2-41
2-58 Mandatory Subrack—side view, cross section A-A 2-41
2-59 Mandatory Subrack w/optional attachment—side view 2-42
2-60 Mandatory Subrack w/optional attachment—front view 2-42
2-61 Mandatory Subrack w/optional attachment—rear view 2-43
2-62 Mandatory Subrack w/optional attachment, one-Tier Backplane mounting in Double-Width Subrack—side view 2-43
2-63 Mandatory Subrack w/optional attachment, two-Tier Backplane mounting in Double-Wide Subrack—side view 2-44
2-64 Example of a Shelf 2-47
2-65 Shelf dimensions—top view 2-48
2-66 Wrist strap terminal with Shelf Ground marking 2-49
2-67 Cable management space in a Frame, 300 mm depth, flush-mounted 2-52
2-68 Cable management space in a Frame, 300 mm depth, recess-mounted 2-53
2-69 Cable management space in a Frame, 600 mm depth 2-54
2-70 Example cable routing—front view 2-54
2-71 Power Module example 2-56
2-72 Nominal positioning of Power Modules in Subrack 2-56
2-73 Power Module, Single-Width, PCB dimensions 2-58
2-74 Power Module, Single-Width, PCB keep-out zone 2-59
2-75 Power Module, Double-Width, PCB dimensions 2-60
2-76 Power Module, Double-Width, keep-out zone, Side 1 2-61
2-77 Power Module, Double-Width, keep-out zone, Side 2 2-62
2-78 Full-height Power Module Component Envelope 2-63
2-79 Face Plate Single-Width Power Module 2-64
2-80 Face Plate Double-Width Power Module 2-65
2-81 Power Module Backplane Connector positioning 2-67
2-82 MCH Module types 2-68
2-83 Typical MCH-PCB arrangements—Card Edge Connector styles 2-69
2-84 Typical MCH-PCB arrangements—Plug Connector styles 2-70
2-85 MCH-PCB 1a dimensions 2-72
2-86 MCH-PCB 2 and PCB 4 dimensions 2-72
2-87 MCH-PCB 2a dimensions 2-73

Property of CERN - For Internal Use Only – External Distribution Prohibited

2-88 MCH-PCB 3 dimensions 2-74
2-89 MCH-PCB 3a dimensions 2-75
2-90 MCH - PCB Insertion barrier—front view 2-76
2-91 MCH-PCB insertion barrier—top view 2-77
2-92 Overall dimensions of two-tongue MCH plug Connector area 2-78
2-93 Overall dimensions of three-tongue MCH plug Connector area 2-79
2-94 Overall dimensions of four-tongue MCH Connector area 2-79
2-95 MCH Tip 2-80
2-96 MCH plug contact mating step dimensions 2-81
2-97 MCH offset transition 2-81
2-98 Positioning MCH four tongue Module, special feature—top view 2-82
2-99 Airflow direction of AdvancedMC Modules 2-83
2-100 Zone 3 and Zone 2 Backplane Connector regions—front view 2-84
2-101 Zone 3 and Zone 2 component keep-in height 2-85
2-102 Zone 3 and Zone 2 Connector keep-in height 2-86
2-103 Keying block and keyed Tongue 2 2-87
2-104 Keying block with electrical connections 2-88
2-105 AMC.0 electrically compatible keying block 2-89
2-106 Example of a Cube 2-90
2-107 Cube concept 2-91
2-108 Pico concept 2-91
2-109 Example of an optional filler panel 2-92
2-110 Example of numbering according to AdvancedTCA® 3.0 Release 2.0 PICMG® base specification 2-95
2-111 Examples of Slot numbering according to Telcordia GR2914CO R3-5 2-96
3-1 Management aspects of an example MicroTCA Shelf 3-3
3-2 Example of multiple MicroTCA Carriers in a Shelf 3-5
3-3 Carrier number assignment in a MicroTCA Shelf 3-29
3-4 I^2C Carrier locator example 3-30
3-5 Example of Shelf Manager located with Carrier Manager 3-39
3-6 Example of Shelf Manager on an external non-MicroTCA platform 3-40
4-1 Current limit levels for each source of Payload Power to a Load Module 4-5
4-2 Current limit levels for each source of Management Power to a Load Module 4-5
4-3 Power Subsystem functionality 4-14
4-4 Non-redundant Power Subsystem example 4-17
4-5 Redundant Power Subsystem example 4-18
4-6 Payload Power redundancy 4-19
4-7 Management Power redundancy 4-20
4-8 Connector pin assignments 4-36
4-9 Example of 3+1 output Channel redundancy 4-40
4-10 Communication of Power Module presence and power good 4-42
4-11 Communication of PM Reset signals 4-43
4-12 Implementation of shared Management Power 4-44
4-13 DC power distribution with and without a Frame-level PDU 4-48
4-14 Redundant battery feeds to a single Power Module 4-49
4-15 Redundant battery feeds to separate Power Modules 4-49
4-16 Maximum inrush current ratio 4-51
4-17 Input voltage transient defined by ANSI T1.315 4-53
4-18 Repetitive graph of an EFT 4-54
4-19 Detailed waveform of an EFT burst period 4-54

Property of CERN - For Internal Use Only – External Distribution Prohibited

4-20 AC power distribution options 4-56
4-21 Limits for conducted emissions on AC power leads 4-58
5-1 Subrack Slot in the MicroTCA grid 5-2
5-2 Inlet airflow distribution for a single Slot 5-5
5-3 Airflow impedance 5-6
5-4 Single-Width/Half-Height AdvancedMC/MCH reference Module 5-11
5-5 Single-Width/Full-Height Power Unit reference Module at 60W 5-12
5-6 Thermal analysis process flow chart (courtesy of PICMG3.0) 5-16
5-7 Cooling multiple MicroTCA Shelves in a 300 mm deep ETS cabinet 5-17
5-8 ETS cabinet (300 mm) w/19 in. MicroTCA Shelf—sectional top view 5-18
5-9 ETS cabinet (300 mm) w/ETSI MicroTCA Shelf—sectional top view 5-18
5-10 ETS cabinet (300 mm) w/recessed 19 in. MicroTCA Shelf—sectional top view 5-19
5-11 ETS cabinet (300 mm) w/recessed ETSI MicroTCA Shelf—sectional top view 5-19
5-12 ETS cabinet (600 mm) w/back-to-back MicroTCA Shelves—sectional top view 5-20
5-13 ETS cabinet (600 mm) w/back-to-back MicroTCA Shelves—sectional side view 5-21
6-1 Fabric cross-over routing 6-3
6-2 Fabric interconnect example 6-4
6-3 Update Channel mapping 6-5
6-4 MCH cross-over Channel mapping 6-6
6-5 Clocking example 6-8
6-6 Non-redundant clock architecture 6-10
6-7 Redundant clock architecture 6-10
6-8 Non-redundant Clock 2 termination 6-11
6-9 Redundant Clock 2 termination 6-12
6-10 Example block diagram of a JSM that supports 12 AdvancedMCs and 2 MCHs 6-15
6-11 Example Centralized MCH switch model 6-28
6-12 Example Direct Module-to-Module model 6-29
6-13 AdvancedMC region mapping 6-30
6-14 Redundant MicroTCA system example 6-40
6-15 Redundant MicroTCA Shelf example 6-41
6-16 Variant redundant MicroTCA system example 6-42
6-17 Basic redundant MicroTCA system example 6-44
6-18 Basic redundant MicroTCA Shelf example 6-45
6-19 Non-redundant MicroTCA system example 6-46
6-20 Non-redundant MicroTCA Shelf example 6-47
7-1 Straight side edges special mating interface 7-2
7-2 Overall dimensions of compression-mount AdvancedMC Backplane Connector 7-3
7-3 Stiffener dimensions for each compression-mount AdvancedMC Connector 7-4
7-4 Overall dimensions of solder surface-mount AdvancedMC Connector 7-5
7-5 Overall dimensions of press-fit AdvancedMC Connector 7-6
7-6 Compression-mount Connector PCB layout 7-7
7-7 Surface-mount Connector PCB layout 7-8
7-8 Press-fit Connector PCB layout 7-9
7-9 Plated through-hole cross section 7-9
7-10 Typical impedance profile, including connections (example for guidance only) 7-15
7-11 Typical return loss profile, including connections (example for guidance only) 7-16
7-12 Typical attenuation profile, including connections (example for guidance only) 7-17
7-13 Card edge interface on each tongue (example) 7-21
7-14 Plug Connector interface with individual MCH Board on each tongue (example) 7-21
7-15 Plug Connector integrated connection between Board and next tongue (example) 7-21

Property of CERN - For Internal Use Only – External Distribution Prohibited

7-16 Slot tolerance on aggregated AdvancedMC Connectors 7-23
7-17 Typical impedance profile, including connections (example for guidance only) 7-26
7-18 Typical return loss profile, MCH plug individual Board style (example for guidance only) ... 7-27
7-19 Typical attenuation profile, MCH plug individual Board style (example for guidance only) .. 7-28
7-20 Overall dimensions of Power Module Output Connector mounted on Backplane 7-32
7-21 Overall dimensions of Power Module Output Connector mounted on Module 7-33
7-22 Overall dimensions of Backplane PCB layout and pinout for Power Module Output Connector 7-34
7-23 Plated through-hole cross section 7-35
7-24 Mating interface dimensions of 48 V/60 V Power Module Input Connector mounted on Module 7-42
7-25 Mating interface dimensions of 48 V/60 V Power Module Input Connector on cable side ... 7-43
7-26 Mating interface dimensions of 24 V Power Module Input Connector mounted on Module 7-44
7-27 Mating interface dimensions of 24 V Power Module Input Connector on cable side 7-45
7-28 Retention mechanism for Power Module Input Connector (example: jack screw) 7-46
7-29 Retention mechanism for Power Module Input Connector (example: cable lock screw) 7-47
7-30 Auxiliary Connector location 7-53
7-31 Set 1: AdvancedMC Backplane Connector contact resistance measurement arrangement 7-54
7-32 Set 1: MCH (individual Board style) contact resistance measurement arrangement 7-55
7-33 Set 1: MCH (integrated style) contact resistance measurement arrangement 7-55
7-34 Set 1: Power Module Output Connector contact resistance measurement arrangement 7-56
7-35 Set 1: Power Module Input Connector contact resistance measurement arrangement 7-56
7-36 Set 2: AdvancedMC and MCH insulation resistance and voltage-proof measurement arrangement 7-57
7-37 Set 2: Power Module Output Connector insulation resistance and voltage-proof measurement arrangement 7-57
7-38 Set 2: Power Module Input Connector insulation resistance and voltage-proof measurement arrangement 7-58
7-39 Set 3: AdvancedMC and MCH current-carrying capacity measurement wiring arrangement 7-58
7-40 Set 3: Power Module Output Connector current-carrying capacity measurement arrangement 7-59
7-41 Set 3: Power Module Input Connector current-carrying capacity measurement arrangement 7-60
7-42 Set 4: AdvancedMC Backplane Connector, MCH Connector, and power output Connector contact disturbance measurement arrangement 7-60
7-43 Set 4: Power Module Input Connector contact disturbance measurement arrangement 7-61
7-44 Set 5: AdvancedMC Backplane Connector signal integrity measurement arrangement 7-61
7-45 Set 5: MCH card edge-style interface signal integrity measurement arrangement 7-61
7-46 Set 5: MCH plug (individual Board style) signal integrity measurement arrangement 7-62
7-47 Set 5: MCH plug (integrated style) signal integrity measurement arrangement 7-62
7-48 Set 5: Cross-talk measurement condition 7-62
7-49 AdvancedMC and MCH Connector shock/vibration test setup 7-63
7-50 Power Module Output Connector shock/vibration test setup 7-63
7-51 Power Module Input Connector shock/vibration test setup 7-64
A-1 MCH Module combinations A-3
A-2 MCH Module cross–pitch line combinations A-4
A-3 AdvancedMC Module combinations A-6
A-4 AdvancedMC Module cross–pitch line combinations A-7
A-5 MMC instance on MCH Module A-9

Property of CERN - For Internal Use Only – External Distribution Prohibited

A-6 Accessing the MMC on an MCH while in an AdvancedMC Slot A-10
A-7 Accessing the MMC on an MCH while in an MCH Slot A-11
A-8 MMC and MCMC are on the same IPMB-L bus A-12
A-9 Accessing the MMC on an AdvancedMC while in an MCH Slot A-13
A-10 MCH-to-MCH cross-connections available to an AdvancedMC while in an MCH Slot A-14
A-11 MCH interconnect resources available while in an AdvancedMC Slot A-16
A-12 Backplane Connector orientation–front Subrack view A-19
A-13 MCH vs. AdvancedMC Connector 1 pin assignment overview A-20
A-14 GND pin assignments identical between MCH and AdvancedMC A-21
A-15 MP and TRST# shorted to GND when tongue 2, 3, or 4 is inserted in Connector 1 ..... A-22
A-16 MP and TRST# shorted to GND when Connector 1 is inserted in tongue 2, 3, or 4 ..... A-23
A-17 PS0# and PS1# pin assignment is identical between MCH and AdvancedMC A-24
A-18 PS1# gets shorted by ESD diode inside fabric Lane transmitter A-25
A-19 Fabric lines on MCH Connector 2, 3, or 4 get shorted by PS0# through diode A-26
A-20 PWR and MP pin assignments are identical between MCH and AdvancedMC A-27
A-21 Receiver lines of fabric interfaces on multiple AdvancedMCs get shorted together by PWR A-28
A-22 PWR_ON interconnect A-29
A-23 PWR_ON shorted to GND if AdvancedMC Module is plugged into MCH Slot A-30
A-24 PWR_ON shorted to GND if MCH Module is plugged into AdvancedMC Slot A-30
A-25 Using MMC to drive PWR_ON only when in an MCH Slot to save power on MP A-31
A-26 GA[2:0] pin assignments are identical between MCH and AdvancedMC A-33
A-27 GA[2:0] lines keep pulling low A-34
A-28 ENABLE# pin assignment is identical between MCH and AdvancedMC A-35
A-29 ENABLE# line will short the fabric line to GND A-36
A-30 SDA_L and SCL_L pins identical between MCH and AdvancedMC A-37
A-31 SDA_L and SCL_L lines not driven A-38
A-32 JTAG pins identical between MCH and AdvancedMC A-38
A-33 MCH cross-over pins equivalent to AdvancedMC A-39
A-34 TMREQ#, I2C_SDA, and I2C_SCL pins located at AdvancedMC Port 15 ..... A-40
A-35 AdvancedMC Port 15 interference with TMREQ# A-41
A-36 I2C_SDA and I2C_SCL interference A-42
A-37 Isolators keep signals tri-stated until E-Keying is resolved A-42

Property of CERN - For Internal Use Only – External Distribution Prohibited

Tables

1-1 Glossary 1-19
2-1 General tolerance guidelines for PCBs (Backplane) 2-6
2-2 General tolerance guideline for mechanical components....2-6
2-3 Sample drawing symbols 2-7
2-4 Nomenclature 2-7
2-5 19 in. and metric (ETSI) maximum grid availability 2-10
2-6 Subrack Card Guide interface, height dimensions 2-25
2-7 Subrack Card Guide interface, width dimensions....2-26
2-8 Optional filler panels dimensions....2-33
2-9 Optional locking dimensions....2-35
2-10 Backplane mounting dimensions....2-39
2-11 Subrack height dimensions 2-44
2-12 Subrack width dimensions (19 in. and metric)....2-44
2-13 Shelf dimension....2-48
2-14 4 mm plug/jack 2-50
2-15 Shelf alarm LEDs....2-50
2-16 Mechanical References....2-98
3-1 Get PICMG Properties command....3-9
3-2 Special FRU Device IDs....3-9
3-3 Carrier Manager FRU Device IDs....3-10
3-4 AdvancedMC-specific management-related signals 3-12
3-5 AdvancedMC addressing 3-12
3-6 EMMC management-related signals 3-13
3-7 Power Module and Cooling Unit addressing 3-13
3-8 OEM Module description record....3-15
3-9 Carrier FRU Information device signals....3-15
3-10 FRU Information Partition record....3-18
3-11 Partition descriptor....3-18
3-12 Carrier Manager IP Link record 3-23
3-13 Get Address Info command extensions for Carrier Manager 3-26
3-14 Site Type values....3-27
3-15 MCH addressing....3-28
3-16 MicroTCA Carrier Information record 3-32
3-17 Slot Entry....3-32
3-18 MicroTCA Shelf Information record 3-34
3-19 MicroTCA Carrier Location Entry....3-35
3-20 Get Location Information command 3-36
3-21 MicroTCA Shelf Manager IP Link record....3-44
3-22 Power Channel mapping 3-50
3-23 MicroTCA Carrier Power Policy record....3-51
3-24 MicroTCA Carrier Power Policy descriptor....3-52
3-25 MicroTCA Carrier Activation and Power Management record....3-53
3-26 MicroTCA Carrier Activation and Current Descriptor....3-54
3-27 Power Module Capability record....3-56
3-28 Power Channel Control command....3-60
3-29 Get Power Channel Status command 3-61
3-30 Power Channel Notification event message....3-63
3-31 PM Reset command....3-65

Property of CERN - For Internal Use Only – External Distribution Prohibited

3-32 Get PM Status command 3-65
3-33 PM Heartbeat command 3-66
3-34 Power Module Status sensor: Event/Reading Type Code = Sensor Specific (6Fh)....3-68
3-35 Power Subsystem Redundancy sensor: Event/Reading Type Code = 0Bh....3-68
3-36 MicroTCA Fan Geography record 3-71
3-37 CU FRU entry....3-71
3-38 Cooled FRU record 3-72
3-39 Resource ID field usage in MicroTCA 3-77
3-40 Get Telco Alarm Capability command....3-81
3-41 Set Telco Alarm State command....3-82
3-42 Get Telco Alarm State 3-83
3-43 Telco Alarm Input event message....3-84
3-44 Get Sensor Reading (Telco Alarm Input sensor) 3-85
3-45 Required MicroTCA IPMI functions....3-96
3-46 Command number assignments and requirements 3-99
3-47 Command privilege levels 3-107
3-48 MicroTCA FRU records: type ID = C0h (OEM) 3-109
3-49 MicroTCA Entity ID assignments....3-110
3-50 MicroTCA sensors: Event/reading type code = sensor specific (6Fh)....3-110
4-1 Pin functionality 4-37
4-2 Maximum inrush current ratios 4-50
4-3 Shelf-level DC voltage requirements....4-55
4-4 Harmonic current limits for Class A equipment 4-57
4-5 Conducted emission requirements AC power leads—current....4-58
4-6 AC conducted immunity requirements 4-59
4-7 Shelf-level AC voltage requirements....4-60
4-8 Power references 4-60
5-1 AMC.0 Module power and 19 in. Subrack cooling requirements 5-4
5-2 Thermal and operating environment 5-10
5-3 Placement and dimensioning of components—AMC/MCH reference Module....5-11
5-4 Placement and dimensioning of components—Power Unit reference Module 5-12
5-5 Limits for equipment used in temperature-controlled locations 5-14
5-6 Temperature limits of touchable surfaces 5-15
5-7 Thermal references 5-22
6-1 MCH1 to JSM pin mapping 6-17
6-2 MCH2 to JSM pin mapping 6-18
6-3 AdvancedMC to JSM pin mapping 6-19
6-4 Power Module to JSM pin mapping....6-22
6-5 Function table for JSM master modes....6-23
6-6 External tester to JSM pin mapping 6-24
6-7 MCH pin list, Connector 1 6-32
6-8 MCH pin list, Connector 2 6-33
6-9 MCH pin list, Connector 3 6-34
6-10 MCH pin list, Connector 4 6-35
6-11 Alternate Connector 2 usages....6-37
7-1 Functional contact pin list of mating interface 7-2
7-2 Plated through-hole dimensions....7-10
7-3 Creepage clearance distances....7-10
7-4 Rated insulation voltages 7-11
7-5 Current-carrying capability 7-11

Property of CERN - For Internal Use Only – External Distribution Prohibited

7-6 Maximum line resistances 7-12
7-7 Minimum insulation resistances....7-13
7-8 Engaging and separating forces....7-18
7-9 Vibration 7-19
7-10 Shock....7-19
7-11 .Functional contact pin list of mating interface: MCH 1 7-20
7-12 Functional contact pin list of mating interface: MCH 2 7-20
7-13 Functional contact pin list of mating interface: MCH 3 and MCH 4 7-20
7-14 Maximum line resistances 7-24
7-15 Engaging and separating forces....7-30
7-16 Vibration 7-30
7-17 Shock....7-31
7-18 Functional contact pin list and mating sequence....7-31
7-19 Plated through-hole dimensions 7-35
7-20 Creepage clearance distances 7-36
7-21 Rated insulation voltages 7-36
7-22 Current rating....7-37
7-23 Maximum line resistances 7-38
7-24 Minimum insulation resistances....7-38
7-25 Engaging and separating forces....7-39
7-26 Vibration 7-40
7-27 Shock....7-40
7-28 Functional contact pin list and sequence for 48 V/60 V Connector 7-41
7-29 Functional contact pin list and sequence for 24 V Connector 7-41
7-30 Creepage clearance distances 7-47
7-31 Rated insulation voltages 7-48
7-32 Current rating....7-49
7-33 Maximum contact resistance change 7-50
7-34 Minimum insulation resistances....7-50
7-35 Engaging and separating forces....7-51
7-36 Vibration 7-52
7-37 Shock....7-52
7-38 AdvancedMC and MCH current-carrying capacity, test current combination on each conductor in a connector 7-59
7-39 List of conditions defined on the signal integrity test report....7-63
7-40 Number of specimen on each test group....7-64
7-41 Test table summary 7-65
7-42 Group A - Mixed flowing gas testing sequence 7-66
7-43 Group B - Mechanical endurance and dust testing sequence....7-70
7-44 Group C - Thermal shock and moisture testing sequence 7-73
7-45 Group D - High temperature and electrical load testing sequence....7-76
7-46 Group E - High temperature and electrical load testing sequence 7-77
7-47 Group F - High-speed performance testing sequence 7-78
7-48 Connector references 7-79
8-1 Cross reference list....8-7
8-2 Recommended EMC test cases based on FRU type 8-9
A-1 Convention in highlighting the importance of mis-insertions A-2
A-2 Detecting mis-insertions A-17
A-3 GA[2:0] assignment.... A-32

Property of CERN - For Internal Use Only – External Distribution Prohibited

Property of CERN - For Internal Use Only – External Distribution Prohibited

Introduction and objectives 1

1.1 Overview

¶ 1 The PICMG® Micro Telecommunications Computing Architecture (MicroTCA™) specification defines the requirements for a system that uses PICMG Advanced Mezzanine Cards (AdvancedMCs) directly on a Backplane. This specification, MicroTCA.0, defines the general mechanical, electrical, thermal, and management properties of a MicroTCA Shelf necessary to support AMC.0-compliant Modules.

1.2 Introduction

¶ 2 MicroTCA has a primary purpose of serving as a platform for telecommunications and enterprise computer network equipment. Its secondary goal is to function as a platform for other demanding marketplaces, such as Customer Premises Equipment (CPE).

¶ 3 MicroTCA is complementary to the PICMG3.0 Advanced Telecommunications Computing Architecture (AdvancedTCA, or PICMG3). Where AdvancedTCA is optimized for very high capacity, high performance applications, MicroTCA is designed to address cost sensitive and physically smaller applications with lower capacity, performance, and perhaps less stringent availability requirements. MicroTCA preserves many of the important philosophies of AdvancedTCA, including basic interconnect topologies and management structure.

¶ 4 Figure 1-1 describes the application space of MicroTCA.

Figure 1-1 Potential MicroTCA application space

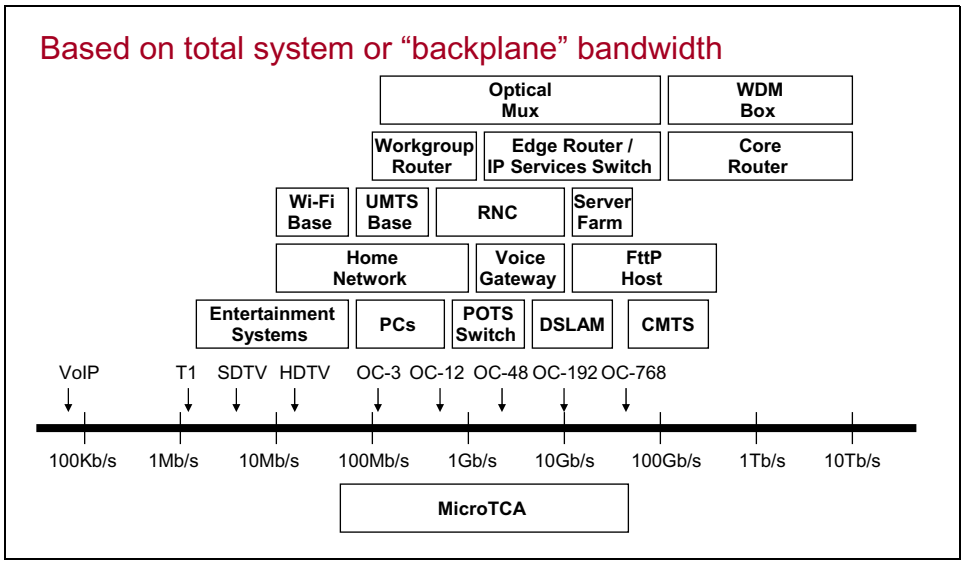

Property of CERN - For Internal Use Only – External Distribution Prohibited

¶ 5 MicroTCA is a modular standard. By configuring highly diverse collections of AdvancedMCs in a MicroTCA Shelf, many different application architectures can be easily realized. The common elements defined by MicroTCA are capable of interconnecting these AdvancedMCs in many interesting ways—powering and managing them, all at high efficiency and low cost.

1.2.1 Scope

¶ 6 The objective of this document is to define the requirements for enclosures to properly house AMC.0-compliant Modules and connect them directly to a Backplane. These enclosures provide the functionality called out in the AMC.0 specification for Carrier Boards, as well as the Shelf management functions required in PICMG 3. This definition includes mechanical and thermal compatibility with AMC.0, power, Backplane interconnect, additional I/O requirements, hardware platform management (including Hot Swap), and regulatory guidelines. Future subsidiary specifications (i.e., MicroTCA.1, MicroTCA.2, etc.) can define specific architectural or packaging options of the MicroTCA base to serve various market segments, such as telecom, medical, industrial control, consumer electronics, or military.

¶ 7 The main body of the MicroTCA.0 specification will not explicitly define a single mechanical implementation or physical arrangement of elements. Various design examples are provided in the body of this document and could be defined in detail in future subsidiary specifications. It is important to realize that MicroTCA Shelves can be constructed using physical arrangements not shown here. Similarly, MicroTCA.0 will not define specific Backplane signaling formats for the main interconnect Channels, as these are adequately defined in the AdvancedMC subsidiary specifications (i.e., AMC.1, AMC.2, etc.).

1.2.2 MicroTCA implementation options

¶ 8 This specification describes the common elements needed to implement any MicroTCA Shelf, including Connectors, MicroTCA Carrier Hub (MCH), Power Modules, Cooling Units, and the Subrack. These elements will be discussed in subsequent chapters in detail.

¶ 9 Parts of this document will also deal with specific implementations that use the standardized elements mentioned above to build actual products. These will be described in informative language in this specification and are included here in hopes of promoting widespread interoperability.

1.2.3 Design goals

¶ 10 This PICMG MicroTCA specification was written with the following design goals in mind:

- Complementary to AdvancedTCA
- Full conformance with the AMC.0 Module definition
- Favorable cost, size, and modularity
- Target low start-up costs
- Scalable Backplane bandwidth
- Modular and serviceable
- Standardized Shelf management implementation compatible with AdvancedTCA

Property of CERN - For Internal Use Only – External Distribution Prohibited

- Support 300 mm nominal equipment depth and 19 in. nominal equipment width
- Cooling: 20–80 W/AdvancedMC
- Support for extended temperatures (–40 to +65 degrees Centigrade)
- Power: 12 V to AdvancedMCs, in conformance with AMC.0
- Life span: at least eight years
- Backplane bandwidth: SerDes @ 1–12+ Gb/s
- Backplane topologies: Star, Dual Star, Mesh
- Scalable system reliability: from .999 to .99999
- Support any/all AdvancedMC-defined form factors
- Hot Swap/plug-and-play support, in conformance with AMC.0 and consistent with AdvancedTCA

1.2.4 Elements of MicroTCA

¶ 11 For the purposes of this specification, a minimum MicroTCA system is defined as a collection of interconnected elements consisting of at least one AdvancedMC, at least one MCH, and the interconnect, power, cooling, and mechanical resources needed to support them. As an example, a typical MicroTCA system consists of up to twelve AdvancedMCs, one (and optionally two for redundancy) MCHs, Power Modules (PMs) with optional redundancy and load sharing, a cooling subsystem (again, optionally redundant), an interconnect (typically a Backplane), and the mechanical elements comprising a Subrack and Shelf.

¶ 12 Refer to Figure 1-2 during the following discussion of MicroTCA Shelf elements:

Figure 1-2 MicroTCA block diagram

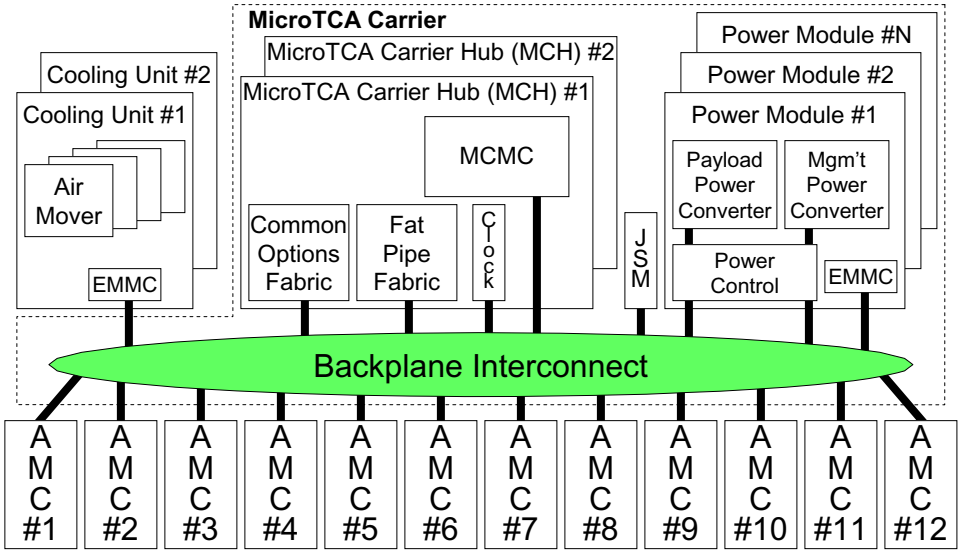

Property of CERN - For Internal Use Only – External Distribution Prohibited

1.2.4.1 AdvancedMCs

¶ 13 AdvancedMCs are the primary component of MicroTCA. The ability to use any AdvancedMCs that conform to the AdvancedMC standard without modification in MicroTCA is an over arching goal of this standard. They provide the functional elements needed to implement useful system functions. Examples of AdvancedMCs that could be installed into a MicroTCA Shelf include CPUs, Digital Signal Processing devices, packet processors, storage, and various sorts of I/O AdvancedMCs (including metallic and optical line units, RF devices, and interfaces to other boxes). MicroTCA offers a significant advantage because the same AdvancedMCs that connect directly to the MicroTCA Backplane can also be equipped on an AdvancedTCA Carrier Board.

¶ 14 MicroTCA supports four different mechanical sizes of AdvancedMCs. The largest is the Full-Height, Double-Width AdvancedMC, which occupies a mechanical volume of 150 x 187.3 x 30.48 mm. This volume can be subdivided into some number of smaller AdvancedMCs, which permits functions to be better partitioned onto Modules. The volume of each Full-Height, Double-Width Module can be occupied by two Full-Height, Single-Width or two Half-Height, Double-Width, or four Half-Height, Single-Width AdvancedMCs.

¶ 15 Figure 1-3 describes the four AdvancedMC form factors that MicroTCA supports, as well as their properties and some potential applications. At the time of this writing (April 2006), the AMC ECN subcommittee is considering a 4HP height form factor that also could be applicable to MicroTCA. They are also considering changes in nomenclature for the form factors (from the current Full-Height and Half-Height) to Full-Size, Mid-Size, and Compact. Other changes under consideration relate to power and cooling (supporting AMCs up to 80 W), clocking (the potential addition of redundant clocks on AMCs), and hardware platform management updates. Subsequent releases of this specification will reflect any changes in AdvancedMC. All Slot locations in MicroTCA fall on multiples of 1.HP (0.2 in. or 5.08 mm).

Figure 1-3 AdvancedMC Module configuration examples

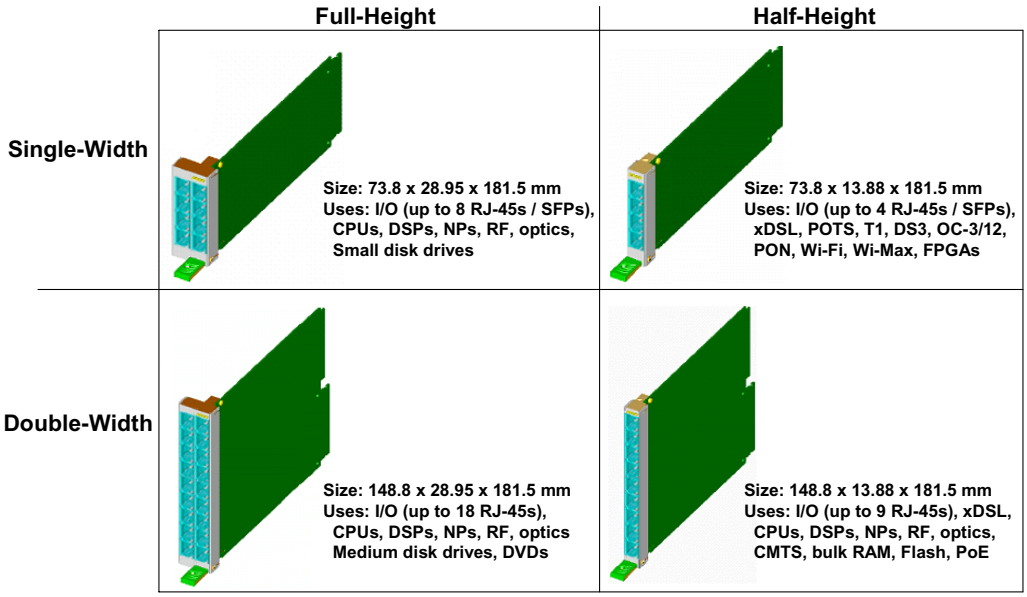

Property of CERN - For Internal Use Only – External Distribution Prohibited

1.2.4.2 MicroTCA Carrier

¶ 16 The MicroTCA Carrier concept is the basis for the MicroTCA specification. Elements of a MicroTCA Shelf act as a MicroTCA Carrier, which emulates the requirements of the Carrier Board defined in AMC.0 to properly host AdvancedMC Modules. Carrier functional requirements include power delivery, interconnects, and Intelligent Peripheral Management Interface (IPMI) management, among others as defined in the AMC.0 base specification. These Carrier functions are implemented on AdvancedTCA Carrier Boards that accept up to eight AdvancedMCs. The term "MicroTCA Carrier" used in MicroTCA refers to Carrier functions needed to provide an infrastructure that supports nominally twelve AdvancedMCs. The elements inside the dotted line in Figure 1-2 represent the MicroTCA Carrier functions.

¶ 17 A MicroTCA Carrier Hub (MCH) combines the control and management infrastructure and the interconnect fabric resources needed to support up to twelve AdvancedMCs into a single Module, which is the same size as an AdvancedMC. MCHs are the infrastructure elements that are shared by all AdvancedMCs. Since MCHs represent a single point of failure in a MicroTCA solution (where any fault could bring down the entire system), it is possible to include a pair of MCHs to make the solution suitable for High Availability (HA) applications. More details on the MCH can be found in Section 3 and Appendix A of this document. Figure 1-4 shows a block diagram of an MCH.

Figure 1-4 MicroTCA Carrier Hub block diagram (12 AdvancedMCs/48 Lanes)

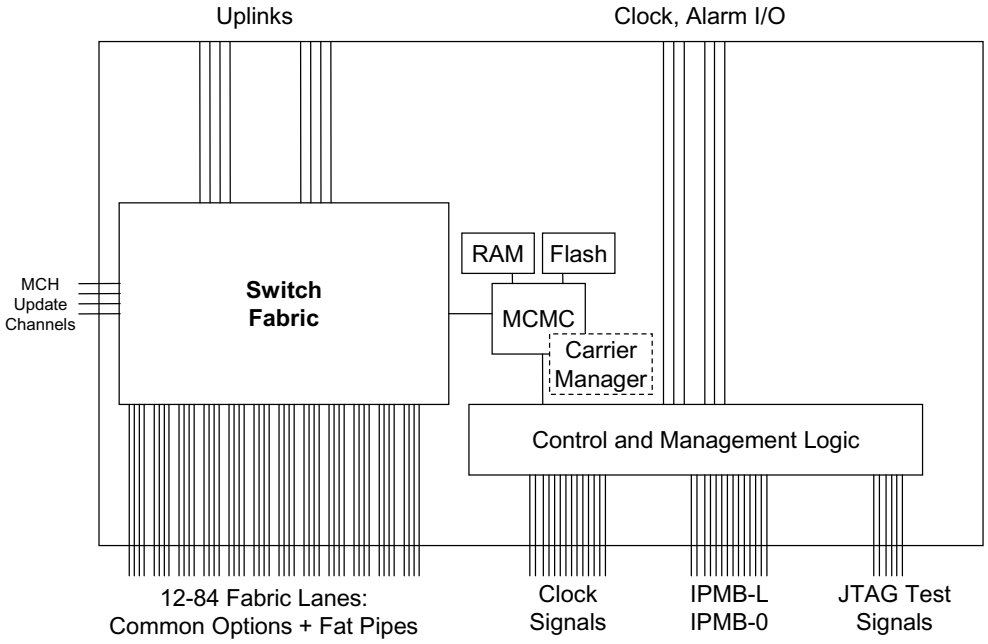

1.2.4.2.1 Control and management infrastructure

¶ 18 The first element of an MCH is the MicroTCA Carrier Management Controller (MCMC) with its Carrier Manager function as the central authority in a MicroTCA Carrier to monitor and control the constituent AdvancedMCs. The Carrier Manager function makes use of IPMB-L Links to each AdvancedMC, as well as presence detect, enable, and Geographic Address signals. IPMB-L and IPMB-0 are located on the MCH(s), while presence detect and enable control are implemented in the Power Modules, under Carrier Manager control. The

Property of CERN - For Internal Use Only – External Distribution Prohibited

MicroTCA Shelf, consisting of one or more MicroTCA Carriers, is managed by the Shelf Manager. The MicroTCA Shelf Manager also monitors events and controls the Cooling Units. Section 3 of this specification contains the details of hardware platform management.

¶ 19 The control and management subsystem of the MicroTCA Carrier also includes the common overhead functions of clock generation and distribution. Three clock signals are distributed to each AdvancedMC position in order to provide network grade synchronization.

1.2.4.2.2 Interconnect fabric infrastructure

¶ 20 An interconnect fabric provides the main connectivity among the AdvancedMCs in a MicroTCA Shelf. This interconnect consists of a central switch and a number of high speed serial Lanes to each AdvancedMC position. Lanes on MicroTCA are differential high speed Serializer / Deserializer interconnects (SerDes), with bandwidth capability of at least 3.125 Gb/s in each direction. Although some MicroTCA implementations using inexpensive connectors and backplanes will run these Lanes at slower rates such as 1 Gb/s, many MicroTCA Shelves will permit these bit rates to increase to beyond 10 Gb/s per Lane. Section 6 has the details of the system interconnect in MicroTCA.

¶ 21 The interconnect protocol used in MicroTCA depends upon the specific format expected by the AdvancedMCs and implemented on the MCH's fabric. All AdvancedMC subsidiary specification formats are supported in MicroTCA, including PCI Express/Advanced Switching (AMC.1), Ethernet (AMC.2), Storage Interfaces (AMC.3), and RapidIO (AMC.4). Future subsidiary specifications of AdvancedMCs, as well as proprietary Backplane protocols, are also possible.

¶ 22 Electronic keying (E-Keying) is implemented on MicroTCA by the Carrier Manager. It ensures that all AdvancedMCs and MCHs installed in a MicroTCA Carrier are compatible before they are permitted to enable their fabric Links.

¶ 23 The fabric component of an MCH is the hub of a star network. Two MCHs are required to implement a dual-star network. In some MicroTCA Shelves, there are supplementary paths directly from each AdvancedMC position to other AdvancedMC positions, permitting the construction of supplemental mesh interconnects and special I/O structures, in addition to the dual star supported by the MCH fabrics.

¶ 24 Optionally, clocking can be provided for the entire MicroTCA Shelf by a synchronization function on the MCH. It has the ability to receive a reference clock from one of the AdvancedMCs it manages, use it to create a set of master synchronization clocks, and distribute these clocks across the Backplane to the AdvancedMCs.

1.2.4.2.3 Power infrastructure

¶ 25 One important function of the MicroTCA Carrier is to supply and control the power to the AdvancedMCs. The AdvancedMC standard specifies a 12 V main Payload Power feed to each AdvancedMC. The MicroTCA Power Module(s) take the input supply and convert it to 12 V to provide radial Payload Power to each AdvancedMC. 3.3 V Management Power for AdvancedMCs is also supplied by the Power Subsystem. The power control logic on the Power Module performs sequencing, protection, and isolation functions. The Power Subsystem is controlled via the Carrier Manager which performs power budgeting to ensure adequate power is available prior to enabling Power Channels.

¶ 26 The Power Subsystem consists of one or more Power Modules. Each Power Module is responsible for converting the input supply that arrives at an Input Power Connector on its Face Plate (either AC or DC) to the individual branches of 12 V Payload Power and 3.3 V

Property of CERN - For Internal Use Only – External Distribution Prohibited

Management Power needed to run the AdvancedMCs, MCHs, and CUs. If extra capacity or redundancy is required, up to four Power Modules can be used in parallel in a MicroTCA Shelf.

¶ 27 Power Modules also include the supervisory functions necessary to manage the Power Subsystem. They have circuitry to detect the presence of AdvancedMCs, MCHs, and CUs, and to energize individual power branches. Power Modules also monitor the power quality of each branch and protect against overload. If a Redundant Power Module is configured, it may automatically take over the Power Channel responsibilities of a failed Primary Power Module.

¶ 28 The MicroTCA Power Subsystem is described in Section 4.

1.2.4.3 Test Infrastructure

¶ 29 An optional JTAG Switch Module (JSM) supports serial scan testing of complete MicroTCA Shelves, as well as their individual elements. This testing is most often carried out during manufacturing tests in a factory setting, but MicroTCA also supports the use of these JTAG test capabilities in active systems in the field. JSM functions may be located in special slots on the backplane, or integrated into other Modules.

1.2.4.4 Backplane and Connectors

¶ 30 MicroTCA requires a Backplane into which the AdvancedMCs and other elements are plugged. High performance connectors of several types are specified by MicroTCA. MicroTCA Carrier elements typically occupy one or more Slots on the Backplane. AdvancedMC Backplane Connectors at each AdvancedMC position bring the signals from the AdvancedMC's card edge connector into the Backplane.

¶ 31 Another connector type, called the MicroTCA Carrier Hub Connector, is used to connect an MCH to the backplane to carry the signals to multiple AdvancedMCs. These connectors are optimized to carry high speed serial signals (supporting bit rates over 10 Gb/s). Power Module Input Connectors are used to bring the input power to the Power Modules. Power Module Output Connectors carry high current power supply connections and various control and management signals from the Power Modules to the Backplane. Section 7 includes the details of the connectors used in MicroTCA.

1.2.4.5 Mechanical infrastructure/Subrack

¶ 32 A mechanical support structure is required to hold the AdvancedMCs, MicroTCA Carrier elements, and Backplane in correct alignment and secure it to the supporting chassis or Frame. This structure, including mounting holes, Card Guides, EMC/ESD control structures, and the means to direct the cooling airflow, is called the Subrack. A particularly challenging aspect of the mechanical design is an option to permit in-field re-configuration of numerous and various types of AdvancedMCs, used in multiple positions in a MicroTCA Shelf. Various additional mechanical elements, including a means to mount the cooling and power elements, cable guides, and brackets, are added to the Subrack to form the entire mechanical infrastructure (Shelf, Cube, or Pico) of a MicroTCA Shelf. The details of MicroTCA's mechanical infrastructure can be found in Section 2.

Property of CERN - For Internal Use Only – External Distribution Prohibited

1.2.4.6 Cooling and thermal subsystem

¶ 33 MicroTCA Shelves can have high power density. A cooling infrastructure is necessary to remove this heat from the electronics. Typically, this will consist of fans or blowers, filters, and air plenums which direct a large flow of forced air through the air paths between the AdvancedMCs and MicroTCA Carrier elements. MicroTCA Shelves may use different cooling approaches, such as conductive cooling or natural convection. Cooling and thermal considerations are discussed in Section 5.

1.2.5 Theory of operation

¶ 34 MicroTCA works by providing the necessary infrastructure and interconnections to permit the AdvancedMC elements in a system to perform their intended functions. The MCH provides the management, clock, and fabric hub signals required by the AdvancedMC specification to each AdvancedMC position over the Backplane. Please refer back to Figure 1-2 on page 1-3 during the following discussion of MicroTCA Shelf operation.

¶ 35 The primary function of this MicroTCA system is to support the various types of AdvancedMCs that perform the system's processing, storage, and I/O functions. The twelve AdvancedMC positions shown in Figure 1-2 can be populated with a diverse mix of AdvancedMC types. Conversely, it is possible to configure a MicroTCA system with only a single type of AdvancedMC. AdvancedMCs can include functionality that employs CPUs for control and feature processing, network processing units for packet processing and I/O, DSP AdvancedMCs for signal processing, storage AdvancedMCs, including built-in disk or flash storage, or interfaces to external storage arrays, and various I/O AdvancedMCs, such as subscriber lines, Ethernet, or optical networking.

¶ 36 A set of common functions is needed to manage the AdvancedMCs, as shown in Figure 1-4. These functions are included in the MCH Module. They include a primary interconnect fabric to interconnect the high speed serial interfaces on AdvancedMCs, MicroTCA Carrier Management Controller (MCMC) and Carrier Manager functions to configure and control the elements, synchronization clocks, and JTAG test circuits. MCHs are optionally duplicated, permitting the creation of highly reliable systems.

¶ 37 The switch fabric may support any of several protocols, as defined by the AdvancedMC subsidiary specifications that govern the complement of AdvancedMCs in a given MicroTCA Shelf. A PCI Express/Advanced Switching fabric supports AMC.1, an Ethernet fabric supports AMC.2, a storage fabric switch supports AMC.3, and a serial RapidIO switch supports AMC.4. Other protocols for the switch fabric are possible.

¶ 38 In addition to the MCH, a power infrastructure is required for a MicroTCA Carrier. Power is delivered to a MicroTCA Shelf through either connections to AC mains voltage or to the +24, -48, or -60 V DC supplies typical of telecommunication installations. The Power Module produces the +12 V DC Payload Power required to operate the AdvancedMCs from the input voltage. The power control block splits, switches, distributes, and protects this +12 V source for the AdvancedMCs. The Power Module also produces, controls, and monitors multiple branches of +3.3 V Management Power for radial distribution to the AdvancedMCs, MCHs, PMs, and Cooling Units.

¶ 39 Hot Swap support is another important function of the MicroTCA Carrier. Individual AdvancedMCs must be installed and removed from a MicroTCA Shelf without disrupting the operation of the other AdvancedMCs. Hot Swap functions on the PMs and Carrier

Property of CERN - For Internal Use Only – External Distribution Prohibited

Manager ensure that no damaging power transients occur as AdvancedMCs are inserted and withdrawn, and no disruptions hamper the operations of other AdvancedMCs that may share the same power infrastructure.

¶ 40 A set of Cooling Units ensures that enough air is forced through the AdvancedMC, PM, and MCH air pathways to keep their temperature within a safe thermal envelope. These Cooling Units typically consist of several individual fans or blowers working in parallel to move an appropriate amount of air at the required pressure. Control systems in the Shelf Manager and Cooling Unit can dynamically adjust the fan speeds in order to provide enough cooling for the given environmental condition, minimizing component wear and acoustic noise.

¶ 41 Fault tolerance and several redundancy options are supported in MicroTCA. Simple, inexpensive systems with less stringent availability requirements are often implemented as simplex Shelves with single MCHs and PMs. As more reliability is required, the common elements of a MicroTCA Shelf can be duplicated optionally, including a pair of MCHs, duplex or N+1 spared PMs, and redundant CUs. Availability levels up to 99.999% are supported in fully redundant MicroTCA Shelves.

1.3 MicroTCA enclosure types

¶ 42 The standard MicroTCA elements described in this document can be assembled into many different types of systems that conform to this specification. Although the variability of these systems is large, it is believed that there will be a few popular implementation types. This section describes a few of these types in order to provide more concrete illustrations of how to assemble the standard elements into actual systems. It should be understood that other arrangements of the standard elements are possible and can still represent full compliance with the MicroTCA specification. Figure 1-5 illustrates six different packaging possibilities for MicroTCA. These configurations are briefly described below. Different complements of AdvancedMCs will fit, depending upon AdvancedMC size, MCH capacity, Shelf width, and Shelf height. This section (and the rest of this specification) emphasizes vertical placement of boards; however horizontal board orientation is also permitted, and has mechanical and thermal implications. MicroTCA also permits variations in airflow paths, location of cooling units, and cable management capabilities. More packaging alternatives for MicroTCA are found in Section 2.

Figure 1-5 MicroTCA packaging illustration

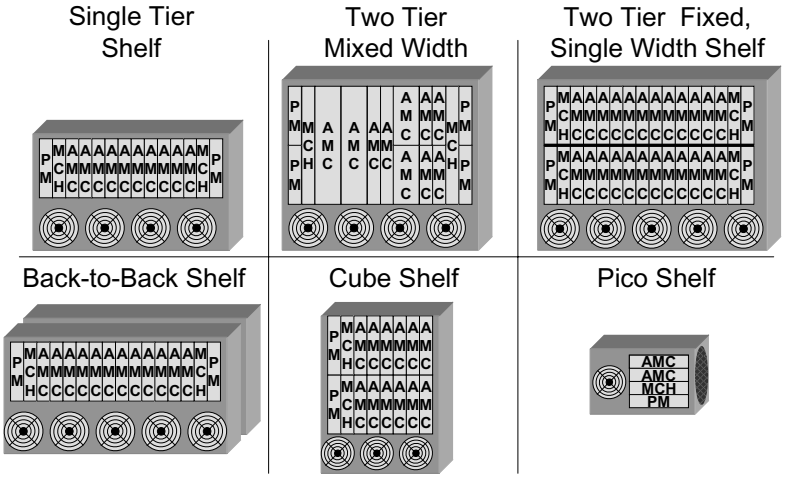

Property of CERN - For Internal Use Only – External Distribution Prohibited

1.3.1 Single-Tier Shelf implementation

¶ 43 Shelf implementations are anticipated to be a popular option for MicroTCA. Shelves contain many AdvancedMCs and the set of MicroTCA Carrier resources and mechanical components needed to support them. They typically span the entire aperture width available in a Shelf (i.e., 17.7 in. for a 19-inch rack, as shown here). This variant uses two Single-Width MCHs, two Single-Width Power Modules, and up to ten Single-Width AdvancedMCs. The height of the Subrack is nominally 75 mm, and with the addition of a reasonable cooling infrastructure, this configuration should fit in approximately 4U (7” or 177.8mm) of vertical space in a Frame.

¶ 44 All of these packaging examples assume 19-inch racks. If 600 mm (IEC 60917) packaging is used, two additional Full-Height Slots become available in each Shelf, holding two additional AdvancedMCs. This brings the system total up to the maximum of twelve AdvancedMCs per MicroTCA Carrier. Different partitioning and form factors of Power Modules and MCHs can also lead to interesting variations of these packaging examples.

1.3.2 Two-Tier mixed-width Shelf implementation

¶ 45 This alternative is basically the same as the 75 mm Shelf, but replaces the Single-Width AdvancedMCs, MCHs, and PMs with Slots supporting Double-Width Modules. This effectively doubles the power dissipation capability and Board area available in a system that requires approximately 5U of mounting height.

¶ 46 Notice that four different AdvancedMC form factors are shown in this example. MicroTCA Shelves are not necessarily limited to supporting a single size of AdvancedMC, but can allow different AdvancedMC form factors to be mixed in the same Shelf. Some Shelf implementations will permit AdvancedMC Slots to be reconfigured to adapt to different complements of different AdvancedMC sizes in the field.

1.3.3 Two-Tier fixed Single-Width Shelf implementation

¶ 47 Two rows of 75 mm x 19 in. Subracks can be stacked to create a two-Tier Shelf. Two individual MicroTCA Carriers and their AdvancedMCs share the same Backplane and cooling subsystem, resulting in higher density and potentially lowering system cost. A two-Tier Shelf could fit in approximately the same space as the 150 mm x 19 in. system. Variations of this Shelf could make use of Double-Width Modules (for AdvancedMCs, MCHs and/or PMs), and also could be more than two levels high, with a maximum of about eight Tiers of Single-Width AdvancedMCs sharing the same Cooling Unit (subject to thermal constraints).

1.3.4 Back-to-Back Shelf implementation

¶ 48 The previous implementations support 300 mm equipment depth and front access only. If the application allows double side access and deeper Frames (i.e., 600 mm equipment depth), it is possible to package two MicroTCA Shelves back to back, doubling the density in the Frame. Directing the exhaust airflow is anticipated to be a challenge in this packaging alternative and is discussed further in the cooling section.

Property of CERN - For Internal Use Only – External Distribution Prohibited

1.3.5 Cube Shelf implementation

¶ 49 Another implementation option for MicroTCA that is anticipated to be popular is the Cube. The Cube implementation gets its name from the fact that it occupies a Cube-shaped volume, approximately 8 in. or 200 mm on a side. Cubes include up to twelve AdvancedMCs, the Power Modules, Cooling Units, and MCHs needed to support them, and mechanical components. Cubes can stand alone. Examples of this include small scale systems or some types of remote network elements. Cubes can also be assembled into two dimensional arrays and installed in a standard Frame.

¶ 50 Variations in the Cube packaging permit combinations of different AdvancedMC, MCH, and PM form factors, non-redundant options, and various mixes of AdvancedMC types.

1.3.6 Pico Shelf implementations

¶ 51 Some MicroTCA systems serve very small applications and consist of only a few AdvancedMCs. These are called Pico Shelves. Some Pico Shelves may not even have an MCH or PM as stand-alone Modules, but rely on making direct Backplane connections between the small community of AdvancedMCs and Backplane-mounted support elements.

¶ 52 This example shows the AdvancedMCs, MCH, and PM mounted horizontally. When AdvancedMCs are mounted horizontally, the preferred direction of airflow is right to left (see Section 5 for details).

1.3.7 Other implementation options

¶ 53 MicroTCA Shelves are not limited to cabinet-mounted applications. The compact size of AdvancedMCs allows MicroTCA enclosures to fit into a variety of space-constrained applications, where only a few AdvancedMCs are needed to complete a system.

¶ 54 MicroTCA Shelves also can be large capacity systems, perhaps with hundreds of AdvancedMCs making up the complete system. These can combine many communities of AdvancedMCs in multiple Tiers and back-to-back packaging to achieve very high system density.

¶ 55 Special MicroTCA Shelves may be developed for applications where extended temperature, ruggedness, or other environmental factors dictate enclosure design. Industrial, medical, and military applications of MicroTCA will probably require special packaging options. Extensions to this MicroTCA specification will probably be required to accommodate these demanding environmental requirements.

1.4 Application examples

¶ 56 MicroTCA is designed to be very versatile, scalable, and adaptable to many different applications. This section discusses a few of the application spaces envisioned for MicroTCA.

Property of CERN - For Internal Use Only – External Distribution Prohibited

1.4.1 Base Station

¶ 57 A wireless base station is a natural fit for MicroTCA. Base stations require many of the properties that MicroTCA provides, including modularity, flexibility, small physical size, and good cooling characteristics. The MCH provides central control, and often, uplinks to the network backbone. The AdvancedMCs provide the various RF and baseband signal processing resources required to implement the wireless technologies, antenna sectors, and frequency ranges for a particular base station implementation.

1.4.2 Router

¶ 58 The large Backplane transport capability and modularity of MicroTCA make it a natural fit for packet routing applications. MCHs provide the central switching fabric and central control needed in a router. AdvancedMCs are configured with multiple I/O interface types, and also often include deep packet processing capabilities. The redundancy capability of the power and MCH Modules are valuable in mission-critical packet backbones.

1.4.3 VoIP node

¶ 59 Many classes of Voice over Internet Protocol (VoIP) boxes are feasible on MicroTCA. The MCHs provide central switching fabrics and control. AdvancedMCs are equipped with subscriber interfaces, such as Ethernet-to-IP phones or POTS lines, network interfaces, digital signal processors, and general purpose processors to perform call processing and feature logic. The full redundancy and .99999 availability of MicroTCA permit its inclusion in lifeline critical telecommunication networks.

1.4.4 Other Telecom Network applications

¶ 60 One of the primary application spaces envisioned for MicroTCA is its function as the basis for telecom network equipment. In this marketplace, it is important to meet very stringent requirements for capacity, performance, reliability, and environmental factors, all at reasonable cost. MicroTCA is designed to fulfill these requirements. Some types of network equipment which may employ MicroTCA applications include:

- Access
- Aggregation functions
- Modular telco line units
- Next Generation Digital Loop Carrier
- Fiber to the Curb Optical Network Units
- Wi-Fi and Wi-Max radio boxes
- Ethernet hubs
- Optical Add/Drop Multiplexers
- Security processors
- Integrated Access Devices
- Small scale service nodes

Property of CERN - For Internal Use Only – External Distribution Prohibited

1.4.5 Enterprise applications

¶ 61 MicroTCA is also highly applicable to business, enterprise, and Small Office/Home Office (SOHO) markets. Enterprise applications tend to value feature richness, flexibility, and very low cost. MicroTCA is viewed to be a good choice for these markets. Example applications include:

- Ethernet hubs
- Enterprise routers
- Firewall/filter/security boxes
- Modular servers
- Wireless access devices
- Disk arrays/Network Attached Storage boxes
- Optical transport

1.4.6 Other applications

¶ 62 Other applications could include:

- Industrial control
- Instrumentation/scientific
- Traffic/vehicle/aerospace/ship applications
- Medical applications
- Homeland security
- Military systems

1.4.7 Consumer applications

¶ 63 Although not its primary focus, MicroTCA may be used in some higher end consumer, entertainment, and home control applications. These applications, while interesting, are outside the scope of this specification.

1.5 Special word usage

¶ 64 This document uses the following keywords:

¶ 65 **may:** indicates the flexibility of choice with no implied preference.

¶ 66 **should:** indicates the flexibility of choice with a strongly preferred implementation. The use of **should not** (in bold text) indicates flexibility of choice with a strong preference that the choice or implementation be avoided.

¶ 67 **shall:** indicates a mandatory requirement. Designers **shall** implement such mandatory requirements to ensure interoperability and to claim conformance with this specification. The use of **shall not** (in bold text) indicates an action or implementation that is prohibited.

Property of CERN - For Internal Use Only – External Distribution Prohibited

1.6 Conformance

¶ 68 Statements of compliance with this specification take the form specified in the PICMG Policies and Procedures for Specification Development:

"This product complies with PICMG MicroTCA.0 Revision 1.0."

¶ 69 Products making this simple claim of compliance must provide, at a minimum, all features defined in this specification as being mandatory by using the keyword "**shall**" in the body of the specification. Such products may also provide recommended features associated with the keyword "**should**", preferentially not provide the features associated with the keywords "**should not**", and permitted features associated with the keyword "**may**".

¶ 70 A simple claim of compliance with a subsidiary specification indicates the presence of all features defined as being mandatory by the use of the keyword "**shall**", and absence of any features defined as being prohibited by the keywords "**shall not" in** the body of that specification. Because subsidiary specifications may also provide for recommended and permitted features beyond the mandatory minimum set and a range of performance capabilities, more complete descriptions of product compliance are encouraged.

1.7 Dimensions

¶ 71 The controlling dimensions shall be millimeters (mm), unless noted otherwise. The controlling units shall be metric, unless noted otherwise. In some cases, English units have been provided in addition to the metric units due to common industry usage.

¶ 72 Dimensions shown with an asterisk (*) are found in the referenced standards. All other dimension and tolerance indications are specific to MicroTCA.

1.8 Regulatory guidelines

¶ 73 MicroTCA equipment is capable of meeting the needs of central office and telecommunication environments, which have unique regulatory requirements. A generally acceptable base set of these requirements is listed in Section 8, "Regulatory requirements and industry standard guidelines" for North America, Europe, and other markets. Actual end-use regulatory requirements are application-specific and may differ from this list. The purpose of Section 8 is to offer regulatory guidance for designers, manufacturers, and users of MicroTCA equipment.

Property of CERN - For Internal Use Only – External Distribution Prohibited

1.9 Reference specifications

¶ 74 The following publications are used in conjunction with this standard. When any of the referenced specifications are superseded by an approved revision, that revision shall apply. All documents may be obtained from their respective organizations.

- AdvancedTCA Base Specification document (PICMG 3.0 R2.0, as amended by ECN 3.0-2.0-001 and ECN 3.0-2.0-002). Referred to as AdvancedTCA Specification in the rest of this document, www.picmg.org
- Advanced Mezzanine Card base specification document (AMC.0 R1.0), www.picmg.org
- Advanced Mezzanine Card specification for PCI Express document (AMC.1 R1.0), www.picmg.org
- Advanced Mezzanine Card specification for Ethernet document (AMC.2 R1.0), www.picmg.org
- Advanced Mezzanine Card specification for storage document (AMC.3 R1.0), www.picmg.org
- Advanced Mezzanine Card specification for RapidIO document (AMC.4 R1.0), www.picmg.org
- ANSI/TIA/EIA-644-A-2001: Electrical Characteristics of Low Voltage Differential Signaling (LVDS) Interface Circuits, January 1, 2001
- ANSI/TIA/EIA-899-2002: Electrical Characteristics of Multipoint-Low-Voltage Differential Signaling (M-LVDS) Interface Circuits for Multipoint Data Storage, March 1, 2002
- IPMI – Intelligent Platform Management Bus Communications Protocol Specification V1.0 Document Revision 1.0, November 15, 1999 Copyright © 1998, 1999 Intel Corporation, Hewlett-Packard Company, NEC Corporation, Dell Computer Corporation. All rights reserved.
- IPMI – Intelligent Platform Management Interface Specification, v1.5. Document Revision 1.1, February 20, 2002. Copyright © 1999, 2000, 2001, 2002 Intel Corporation, Hewlett-Packard Company, NEC Corporation, Dell Computer Corporation. All rights reserved.
- IPMI – Platform Event Trap Format Specification V1.0 Document Revision 1.0, December 7, 1998 Copyright © 1998, Intel Corporation, Hewlett-Packard Company, NEC Corporation, Dell Computer Corporation. All rights reserved.
- IPMI – Platform Management FRU information Storage Definition, V1.0 Document Revision 1.1, September 27, 1999 Copyright © 1998, 1999 Intel Corporation, Hewlett-Packard Company, NEC Corporation, Dell Computer Corporation. All rights reserved.
- IPMI – Wired for Management Baseline, Version 2.0.
- PICMG® Policies and Procedures for Specification Development, Revision 2.0, September 14, 2004, PCI Industrial Computer Manufacturers Group (PICMG®), 401 Edgewater Place, Suite 500, Wakefield, MA 01880 USA, Tel: 781.224.1100, Fax: 781.224.1239, www.picmg.org

Property of CERN - For Internal Use Only – External Distribution Prohibited

1.10 MicroTCA.0 Specification contributors

¶ 75 The following companies met the criteria as active members of the MicroTCA subcommittee at the time of this writing:

Artesyn Technologies	**Asset-Intertech**	**C & D Technologies**	**Carlo Gavazzi Computing Solutions**
Comtel Electronics	**Coredge Networks**	**Coredge Networks**	**Elma Bustronic**
EPT	**Ericsson**	**Erni**	**FCI**
Foxconn	**Harting**	**IDT**	**Intel**
Kaparel	**Kontron**	**Lucent Technologies**	**MicroBlade**
Molex	**Motorola**	**Nokia**	**Performance Technologies**
Pigeon Point Systems	**Pinnacle Data Systems**	**Positronics**	**Riverstone Networks**
Sanmina-SCI	**SBS Technologies**	**Schroff**	**Southco**
Texas Instruments	**Tyco**	**Ulticom**	**X-TECH**
Yamaichi			

1.11 Name and logo usage

¶ 76 This is the MicroTCA logo:

µTCA™

¶ 77 The blue color used for the “µ” is PANTONE 293 CVC.

¶ 78 The PCI Industrial Computer Manufacturers Group policies regarding the use of its logos and trademarks are as follows:

¶ 79 Permission to use the MicroTCA organization logo is automatically granted to designated PICMG members only as stipulated on the most recent Membership Privileges document (available at www.picmg.org) during the period of time for which their membership dues are paid. Non-members must not use the PICMG organization logo.

¶ 80 The PICMG organization logo must be printed in black or color, as shown in the files available for download from the member’s side of the Web site. The center bar of the logo containing the phrase “PICMG” is set horizontally, and the aspect ratio of the entire logo must be maintained, but the size may be varied. Nothing may be added or deleted from the PICMG logo.

Property of CERN - For Internal Use Only – External Distribution Prohibited

¶ 81 The PICMG®, CompactPCI®, AdvancedTCA®, ATCA®, CompactPCI® Express and the PICMG, CompactPCI, AdvancedTCA and ATCA logos are registered trademarks, and COM Express™, MicroTCA™, µTCA™, CompactTCA™, AdvancedMC™ and SHB Express™ are trademarks of the PCI Industrial Computer Manufacturers Group. All other brand or product names may be trademarks or registered trademarks of their respective holders.

¶ 82 Manufacturers' distributors and sales representatives may use the MicroTCA® logo (but not the PICMG organization logo) in promoting products sold under the name of the manufacturer. The use of MicroTCA logos is a privilege granted by the PICMG organization to companies who have purchased the relevant specifications (or acquired them as a member benefit) and who believe their products comply with these specifications. Use of the logos by either members or non-members implies such compliance. PICMG may revoke permission to use logos if they are misused.

¶ 83 The MicroTCA name and logo are registered trademarks of PICMG. Registered trademarks must be followed by the ® symbol, and the following statement must appear in all published literature and advertising material in which the logo appears:

"The MicroTCA name and logo are trademarks of the PCI Industrial Computer Manufacturers Group."

1.12 Intellectual property

¶ 84 The Consortium draws attention to the fact that it is claimed that compliance with this specification may involve the use of a patent claim(s) (Intellectual Property - "IPR"). The Consortium takes no position concerning the evidence, validity, or scope of this IPR.

¶ 85 Under the PICMG Intellectual Property Rights Policy adopted by the Executive Membership September 14, 2004, the license grants of Necessary Claims made in connection with this specification apply only to the Compliant Portion of an implementation. As a result they apply only to the required (as designated by the keyword "shall") or recommended (as designated by the keyword "should") elements of a specification that are within the bounds of the Statement of Work under which the Specification was developed.

¶ 86 The holder of this IPR has assured the Consortium that it is willing to license or sublicense all such IPR to those licensees (Members and non-Members alike) desiring to implement this specification. The statement of the holder of this IPR to such effect has been filed with the Consortium.

¶ 87 Attention is also drawn to the possibility that some of the elements of this specification may be the subject of IPR other than those identified below. The Consortium shall not be responsible for identifying any or all such IPR.

¶ 88 No representation is made as to the availability of any license rights for use of any IPR inherent in this specification for any purpose other than to implement this specification.

¶ 89 This specification conforms to the current PICMG® Intellectual Property Rights Policy and the Policies and Procedures for Specification Development and does not contain any known intellectual property that is not available for licensing under Reasonable and Non-discriminatory terms. In the course of Membership Review the following disclosures were made:

Property of CERN - For Internal Use Only – External Distribution Prohibited

1.12.1 Necessary claims

¶ 90 (referring to mandatory or recommended features)

¶ 91 Adtron - three US patents related to Card Guides: 6,716,035 April 6, 2004; 6,831,832 Dec. 14, 2004; and 6,918,177 July 19, 2005

¶ 92 Intel - “Chassis Cooling System” US Patent No, 6,912,129

¶ 93 Lucent Technologies - “Hierarchical Packaging for Telecommunications and Computing Platforms” US Application in progress (#20060123021)

¶ 94 Lucent Technologies - “Mounting of mezzanine circuit Boards to a base Board” US Patent No, 6,646,890

¶ 95 Lucent Technologies - “Backplane configuration without common switch fabric” US Patent No 6,693,901

¶ 96 Lucent Technologies - “Programmable Clock Management Component Reconfiguration Upon Receipt Of One Or More Control Signals To Be Able To Process One Or More Frequency Signals” US Application in progress (#20040243874)

¶ 97 Rittal - “Rack mount system for pluggable computer Modules
US Patent No. 6,434,018

¶ 98 Schroff - “Top or Bottom part for a Module Chassis”
European Application No. EP 1 441 579 A1

¶ 99 Tyco Electronics - Two patents relating to MicroTCA Backplane Connectors: US Patent Nos. 5,582,519 and 5,630,720

¶ 100 In addition, this specification requires implementations of the Intelligent Platform Management Interface and Intelligent Platform Management Bus specifications. The IPMI Promoters (Dell, HP, Intel Corporation and NEC Corporation) require that implementers of either of these specifications sign the IPMI Adopters Agreement. Please refer to www.intel.com/design/servers/ipmi for details.

1.12.2 Unnecessary claims

¶ 101 (referring to optional features or non-normative elements)

¶ 102 Some management and diagnostic capabilities (particularly relating to JTAG testing) may be subject to the IP claimed in U.S. patents 5933594 and 5630048. Intel has acquired the rights to sublicense this IP, and Intel agrees to “RAND with royalty election” for PICMG 3.0 products if aspects of the PICMG 3.0 specification are covered by this IP.

¶ 103 FCI - “Ground Shields” US Patents 6,561,850 and 6,464,537. There is no available license for these patents.

Property of CERN - For Internal Use Only – External Distribution Prohibited

1.12.3 Third party disclosures

¶ 104 (Note that third party IPR submissions do not contain any claim of willingness to license the IPR.)

¶ 105 No disclosures in this category were made during subcommittee review.

¶ 106 Refer to PICMG® IPR Policies and Procedures and the company owner of the patent for terms and conditions of usage.

¶ 107 PICMG® makes no judgment as to the validity of these claims or the licensing terms offered by the claimants.

¶ 108 THIS SPECIFICATION IS BEING OFFERED WITHOUT ANY WARRANTY WHATSOEVER, AND IN PARTICULAR, ANY WARRANTY OF NON-INFRINGEMENT IS EXPRESSLY DISCLAIMED. ANY USE OF THIS SPECIFICATION SHALL BE MADE ENTIRELY AT THE IMPLEMENTER'S OWN RISK, AND NEITHER THE CONSORTIUM, NOR ANY OF ITS MEMBERS OR SUBMITTERS, SHALL HAVE ANY LIABILITY WHATSOEVER TO ANY IMPLEMENTER OR THIRD PARTY FOR ANY DAMAGES OF ANY NATURE WHATSOEVER, DIRECTLY OR INDIRECTLY, ARISING FROM THE USE OF THIS SPECIFICATION.

¶ 109 Compliance with this specification does not absolve manufacturers of MicroTCA™ equipment from the requirements of safety and regulatory agencies (UL, CSA, FCC, IEC, etc.).

1.13 Glossary

¶ 110 The following glossary contains definitions of terms and acronyms that appear in this document:

Table 1-1 Glossary

Term or acronym	Description
Aggressor	A signal inductively and/or capacitively coupled to a Victim signal and considered to be source of noise that distorts the Victim signal being transferred between transmitter and receiver
AMC.0	The base specification for AdvancedMC. When the term “AMC” is used on its own, it can refer to the AMC.0 specification; or it can refer generically to the family of AdvancedMC specifications, depending on the context.
AMC.1	A subsidiary specification of AdvancedMC that uses PCI Express/Advanced Switching as its interconnect
AMC.2	A subsidiary specification of AdvancedMC that uses Ethernet interconnects
AMC.3	A subsidiary specification of AdvancedMC used for storage interfaces
AMC.4	A subsidiary specification of AdvancedMC that uses RapidIO Interconnects
ANSI	American National Standards Institute
Auxiliary Connector	A supplementary Connector used to provide more signals on an AdvancedMC

Property of CERN - For Internal Use Only – External Distribution Prohibited

Table 1-1 Glossary (continued)

Term or acronym	Description
AWG	American Wire Gauge
Backplane	An interconnecting device with connectors, allowing Modules to plug into it
Board	An electronic assembly usually consisting of components mounted on a printed circuit
Card Guide	A mechanical component that provides for the AdvancedMC guidance feature in a Slot
Card Guide Support Plate (CGSP)	A mechanical member that supports the Card Guides
Carrier Board	A Board that conforms to PICMG® 3.0 mechanicals (8U x 280 mm), including a PCB and a Panel. Further, a Board connects with the Zone 1 and Zone 2 Backplane Connectors and, optionally, may connect with a Zone 3 Midplane Connector or directly to an RTM Connector and is installed into the front portion of an AdvancedTCA Shelf. AdvancedTCA Carrier Boards typically accept a number of AdvancedMCs. The MicroTCA Carrier emulates many of the functions of a Carrier Board.
Carrier Local Address	The combination of Site Type and Site Number that uniquely identify a Module within a MicroTCA Carrier
Carrier Manager	A logical function that manages and controls the AdvancedMC Modules, OEM Modules, PMs, and CUs in a MicroTCA Carrier through a set of signals controlled by the PMs together with the IPMB links
Carrier Number	A value to uniquely identify a MicroTCA Carrier within a Shelf
CGSP	See Card Guide Support Plate
CFM	Cubic Feet per Minute, a measure of cooling air flow. One CFM is equivalent to 472 cubic centimeters per second.
Channel	A group of up to four Ports in the Fat Pipes region which are logically grouped together via E-Keying to define the physical traces of a Link between Link partners. Multiple Channels can be aggregated for a wider Link.
Channel ID	An index into the list of AMC Channels that are defined on an MCH or on a Module
Clearance	Air gap required between two electrical components to ensure proper isolation of high voltages
CMTS	Cable Modem Termination System
CO	Central Office
Common Options Region	The low order portion of the AdvancedMC Lane mappings, where Lanes are defined as common control fabric interfaces. MicroTCA uses these as a basic interconnect between the AdvancedMCs and MCHs.
Component Envelope Depth	Maximum length for placing components between the Face Plate and rear Connector.
Component Envelope Height	Maximum height allowed for components
Component Side 1	The side of the AdvancedMC which supports the greater Component Envelope Height
Component Side 2	The side of the AdvancedMC which supports the lower Component Envelope Height. This side can be used for the solder connections of the components on Component Side 1 and for low-height electronic components.

Property of CERN - For Internal Use Only – External Distribution Prohibited

Table 1-1 Glossary (continued)

Term or acronym	Description
Contact List	Defines the use of each contact. Directed signals appear in the lists differently, as applicable to the respective viewpoint of the Module and the MicroTCA Backplane.
Cooling Unit (CU)	A subassembly including fans or blowers to move air to cool a MicroTCA Shelf and related support electronics
CPE	Customer Premise(s) Equipment
CPU	Central Processing Unit or Computer
Creepage	Surface distance required between two electrical components. It specifies minimum isolation distances between high voltages across surface paths.
CU	See Cooling Unit
Cube	A MicroTCA packaging option where AdvancedMCs, MCHs, PMs, cooling, and mechanical elements are all packaged in a small, roughly cubic enclosure that is approximately 200 mm or 8 in. on a side
DC	Direct current
Double-Width Slot	Mounting location on a MicroTCA Shelf for a Full-Height or Half-Height Double-Width Module. Double-Width Slots may be created by removing a Strut and Card Guide between two Single-Width Slots.
Double-Width Module	A Module that is roughly twice the width of a Single-Width AdvancedMC Module. Double-Width AdvancedMCs measure approximately 150 mm wide.
DSP	Digital Signal Processor
DVD	Digital Versatile Disc
EIA	Electronic Industry Association
Electronic Keying or E-Keying	Abbreviation for Electronic Keying. Electronic Keying defines the process in which a MicroTCA Shelf determines if the Control and Fabric interfaces on a Module are compatible with the MicroTCA Shelf interconnects and the other Modules they reach.
EMC	Electromagnetic Compatibility is the condition that prevails when telecommunications (communication-electronic) equipment is collectively performing its individual designed functions in a common electromagnetic environment without causing or suffering unacceptable degradation due to electromagnetic interference to or from other equipment/systems in the same environment.
EMC Gasket	An electrically conductive elastic stripe mounted to defined edges of the Face Plate providing EMC closure around the AdvancedMC Slots
EMMC	Enhanced Module Management Controller, used on Cooling Units, Power Module, and OEM Modules. See Module Management Controller (MMC).
ESD	Electrostatic Discharge
ETSI	European Telecommunications Standards Institute
ETTE	Environmental Testing for Telecommunication Equipment
EU	European Union

Property of CERN - For Internal Use Only – External Distribution Prohibited

Table 1-1 Glossary (continued)

Term or acronym	Description
Extended Region	The high order portion of the AdvancedMC Lane mappings that are typically used to carry special or high speed data streams. MicroTCA uses the Extended Region to provide high bandwidth interconnects—beyond what can be carried on the Common Options Region or Fat Pipes region.
Fabric Interface	The set of MCH Fabric Channel interfaces that provides up to seven Fabric Channels to the AdvancedMCs
Fabric, Fabric Channel	The connection where the MCH is the endpoint of a Slot-to-Slot connection to one-to-four Ports on an AdvancedMC
Face Plate	The front-most element of a Module, attached perpendicular to the PCB, which serves to mount Connectors, indicators, controls, and also seals the front of the Subrack for airflow and EMC
Fat Pipe	A data transmission circuit or network that is capable of carrying large amounts of data without significantly degrading the speed of transmission. The term is derived from the simple plumbing fact that a larger diameter pipe will carry more fluid (or gas) at a greater rate than a smaller one. MicroTCA uses Fat Pipes as high bandwidth interconnects to supplement the Common Options Region.
FCC	Federal Communications Commission, a regulatory body in the United States
FET	Field Effect Transistor
Frame	An enclosure used for mounting one or more MicroTCA Shelves
FRU	Field Replaceable Unit, any entity that can be replaced by a user in the field
FRU Device ID	A value that uniquely identifies a FRU relative to an IPM Controller. In MicroTCA the most frequent use of FRU Device ID is to uniquely identify a FRU within a MicroTCA Carrier relative to the Carrier Manager.
FRU Information	Data that describes a FRU with an emphasis on data that characterizes the FRU. Format for this data is described in IPMI Platform Management FRU Information Storage Definition and extended herein.
Full-Height Module	Modules that have a Full-Height Face Plate and allow for taller components on Component Side 1 of the Module. Face Plate height is 28.95 mm.
GbE	Gigabit Ethernet (1000BASE-BX)
Gbps	Gigabits (= 1,000,000,000 bits) per second
GBps	Gigabytes (= 1,000,000,000 bytes) per second
Geographic Address (GA)	Identifies the Site Number part of the Carrier Local Address of a Slot in a MicroTCA Carrier via three, three-state signals. Each valid GA combination of the three signals maps to a specific Slot in a MicroTCA Carrier.
HA	High Availability
Half-Height Module	The component height on Component Side 1 of Half-Height Modules is optimized to allow for two stacked Modules to equally split the maximum height (AdvancedTCA pitch) available. The term Half-Height should not be taken literally as being half of a Full-Height Module. Face Plate height is 13.88 mm.
Handle	An item or part used to insert or extract Modules in and out of Slots

Property of CERN - For Internal Use Only – External Distribution Prohibited

Table 1-1 Glossary (continued)

Term or acronym	Description
Hot Swap	To remove a component (e.g., an AdvancedMC Module) from a system (e.g., an MicroTCA Shelf) and plug in a new one while the power is still on and the system is still operating
Hot Swap Switch	A switch that is integrated with the Module Latch Mechanism so that its state reflects the state of the Latch. The Hot Swap Switch is disconnected when the Module Handle is fully inserted.
HP	Horizontal Pitch. A measure of Module-to-Module spacing equaling 0.2 in.
I/F	Interface
I/O	Input/Output
I^2C	Inter-integrated Circuit bus, a multi-master, two-wire serial bus used as the basis for IPMBs
IEC	International Electro-technical Commission
IEEE	Institute of Electrical and Electronics Engineers
Intelligent FRU	A FRU containing a management controller. Intelligent FRUs include the AdvancedMCs, MCHs, CUs, PMs, and OEM Modules, etc.
IP	Internet Protocol, a packet-based protocol for delivering data across networks
IPMB	Intelligent Platform Management Bus. The lowest level hardware management bus as described in the Intelligent Platform Management Bus Communications Protocol Specification.
IPMB-0	A dual redundant IPMB that connects MCMCs and EMMCs in a MicroTCA Carrier. Electrically and logically separate from the Local IPMB (IPMB-L).
IPMB-A, IPMB-B	Intelligent Platform Management Buses A and B, respectively. Refers to the two redundant IPMBs that aggregate into IPMB-0.
IPMB-L or Local IPMB	Connects AdvancedMC's MMC with the MCH's MCMC. Electrically and logically separate from the MCMC's IPMB-0.
IPMI	Intelligent Platform Management Interface. A specification and mechanism for providing inventory management, monitoring, logging, and control for elements of a computer system as defined in Intelligent Platform Management Interface Specification.
IPR	Intellectual Property
ISO	International Standards Organization, responsible for the ISO 9000 and other international quality standards
ITE	Institute of Transportation Engineers, an international individual member educational and scientific association
ITU	International Telecommunication Union
JSM	See JTAG Switch Module
JTAG	Formally, Joint Test Action Group, an organization that proposed adoption of a specification for a test access port and boundary-scan architecture. Informally, but commonly, the standard, namely IEEE Std 1149.1, that arose from the efforts of the Joint Test Action Group.

Property of CERN - For Internal Use Only – External Distribution Prohibited

Table 1-1 Glossary (continued)

Term or acronym	Description
JTAG Switch Module (JSM)	A Module that controls the distribution of JTAG signaling to the AdvancedMCs and MCHs within a MicroTCA Carrier
Keying Block	Mechanical entity installed on the backplane used to allow full insertion of Modules that comply with specific mating requirements related to optional Auxiliary Connectors and prevent full insertion of Modules that don't comply
Lane	1. A set of differential signal pairs, one pair for transmission and one pair for reception. One or more Lanes operate together to form a Link 2. E-Keying definition of a differential pair associated with a specific Fabric Link (e.g., a Link generally consists of Lanes[x:0])
LED	Light Emitting Diode
LFM	Linear Feet per Minute, a measure of air velocity. One LFM is equivalent to 0.508 centimeters per second.
Link	1. One or more Ports aggregated under a common protocol. Links are groups of Ports that are enabled and disabled by Electronic Keying operations. A xN Link (pronounced “by-N Link”) is composed of N Ports. 2. A group of Lanes which operate together to connect two devices. The number of Lanes used is negotiated.
Locking Bar	A metal bracket that prevents extraction of Modules both intentional and unintentional
Logic Ground, Ground, or GND	The reference potential for logic signaling and local power distribution on the MicroTCA Shelf and on the Module
LSSGR	LATA Switching System Generic Requirements (Bellcore) or Local Switching System General Requirements (Bell System)
LUN	Logical unit as defined by IPMI
LVCMOS	Low Voltage Complementary Metal Oxide Semiconductor
LVTTL	Low Voltage Transistor-Transistor Logic
LVDS	Low Voltage Differential Signaling, as defined in ANSI/EIA-644-A
LWA Units	Long Wavelength Array Units – used in acoustical measurements
MAC	Media Access Control
Managed FRU	Either an Intelligent FRU or a FRU that is represented by an Intelligent FRU via a FRU Device ID
Management Power (MP)	The 3.3 V power for a Module's management function, individually provided to each Slot by the MicroTCA Shelf
Management Power Channel	An independently managed electrical path that carries Management Power to a Module from a bulk power source
MCH	See MicroTCA Carrier Hub
MCH Crossover Channel	An interface between two MCHs used for implementation-defined communication
MCH Update Channel	An interface between two MCHs used to synchronize state information

Property of CERN - For Internal Use Only – External Distribution Prohibited

Table 1-1 Glossary (continued)

Term or acronym	Description
MCMC	See MicroTCA Carrier Management Controller
MicroTCA™	This specification, governing the application of AdvancedMCs directly on a Backplane. Although not preferred, it is also acceptable to abbreviate it uTCA or µTCA.
MicroTCA Carrier	A group of functions conforming to AMC.0 required to properly support up to twelve AdvancedMC Modules connected together via a common Backplane. The MicroTCA Carrier functions include: power regulation and distribution, hardware platform management, fabric connectivity and optionally clock distribution and JTAG test control.
MicroTCA Carrier Hub (MCH)	An assembly providing MicroTCA Carrier functions needed to support up to twelve AdvancedMCs including MCMC, optional ShMC, optional Fabric switch, and clock.
MicroTCA Carrier Management Controller (MCMC)	Management controller on the MCH. The required management controller that interfaces to AdvancedMC MMCs via IPMB-L and to CU, PM, and OEM Module EMMCs via IPMB-0.
MLID	Multiple Layer Interface Driver
M-LVDS	A later development of LVDS defined in ANSI/TIA/EIA-644. It is specifically designed for multi-drop and multi-sourced signaling.
MMC	The required management controller on an AdvancedMC Module which interfaces to the MicroTCA Carrier Manager on the MCH via IPMB-L
Module	Refers to any MicroTCA Module types, including CU, PM, MCH, OEM Module, or AdvancedMC
Module EMC Gasket	Compressible woven EMC material along the left hand side and the bottom of the Module
Module Handle	Hand grip that is connected to the Module Latch Mechanism, provides user interface that initiates Hot Swap sequence and Module removal
Module Latch Mechanism	Mechanism to hold the Module locked in the Slot with the Module in contact with the bottom of the Slot. The Module Latch Mechanism also provides coupling to the Hot Swap Switch.
Module LEDs	The collective name for the following LEDs available at the Module Face Plate: BLUE LED, LED 1, LED 2, LED 3
MOSFET	Metal Oxide Semiconductor Field Effect Transistor – a type of transistor often used in power control circuits
MP	See Management Power
MTBF	Mean Time Between Failure(s)
NEBS	Network Equipment Building Systems. A specification published by Telecordia governing the environmental characteristics of telecommunications equipment.
OC	Optical Carrier
OEM Module	A Module proprietary to a specific Original Equipment Manufacturer, managed over IPMB-0
ONU	Optical Network Unit
OSP	Optical Signal Processing

Property of CERN - For Internal Use Only – External Distribution Prohibited

Table 1-1 Glossary (continued)

Term or acronym	Description
Payload	The primary function that a FRU provides. This includes all the hardware on the FRU except that associated with management. It may also include the firmware, operating system and application software running on the Payload hardware.
Payload Interface	The interface, usually local to the Module, between an (E)MMC and its Payload
Payload Power	The nominal 12 V supply power, individually provided to each Slot by the MicroTCA Shelf for the payload function of the Module
Payload Power Channel	An independently managed electrical path that carries Payload Power to a Module from a bulk power source
PCI	Peripheral Component Interconnect
PDU	Power Distribution Unit
PHY	Physical Layer Device
PICMG®	PCI Industrial Computer Manufacturers Group (PICMG). An industry standards body responsible for the creation of specifications such as AdvancedTCA, AdvancedMC, and MicroTCA.
Pico	A small packaging option of MicroTCA that consists of a small number of AdvancedMCs and the basic MicroTCA Carrier support components needed to operate them
Pin	The elementary connectivity provided by the Connector
Plug	A mating connector that interfaces to one or multiple AdvancedMC backplane connectors and replaces the card edge contacts
PM	See Power Module
PoE	Power over Ethernet
PON	Passive Optical Network
Port	A set of differential signal pairs, one pair for transmission and one pair for reception
POTS	Plain Old Telephone Service
Power Channel	A FRU connection to the Power Subsystem, consisting of Payload Power, Management Power, ENABLE# and PS1#
Power Module (PM)	Front accessible Module that controls the power entry, conversion and distribution of 12 V Payload Power to the Modules within a MicroTCA Shelf
Power Module Input Connector	The connector on the PM Face Plate to which input power is connected
Power Module Output Connector	The PM connector that mates with the backplane connector
Power Subsystem	The PMs operating together in a MicroTCA Carrier
Primary PM	The PM that provides primary power for a given power channel
PWR	See Payload Power
QuEST	Quality Excellence for Suppliers of Telecommunications

Property of CERN - For Internal Use Only – External Distribution Prohibited

Table 1-1 Glossary (continued)

Term or acronym	Description
RAM	Random Access Memory
RAS	Reliability, Availability, Serviceability
Redundant PM	A PM that takes over for any failed Primary PM
RF	Radio Frequency
RJ-45	Registered Jack-45, an eight-wire Connector used commonly to connect computers onto a local-area network (LAN), especially Ethernets
RMCP	Remote Management Control Protocol defined in IPMI
RoHS	Restriction of the Use of Certain Hazardous Substances
SATA	Serial Advanced Technology Attachment
SerDes	Serializer-Deserializer
SFP	Small Form Factor Pluggable, a type of packaging for I/O physical layer components, typically optical I/O components
Sensor Data Record (SDR)	A data structure record that describes the properties of a sensor, management controller or FRU Information device. Defined in IPMI.
Shelf	An electronic assembly consisting of the Subrack, Backplane, Modules, cooling devices, power subsystems, etc. Also historically known as a chassis. Shelves are usually mounted in Frames.
Shelf-Carrier Manager Interface	A logical IPMB between the Shelf Manager and the Carrier Managers
Shelf Ground	The electrical potential of the metal Frame of the system, the Face Plate of the MicroTCA Shelf, and the Face Plate of the Module. It is important for electrical safety.
Shelf Manager	The entity responsible for managing the cooling in a MicroTCA Shelf. It also routes messages between the System Manager Interface and the Shelf-Carrier Manager Interface, provides interfaces to system repositories, and responds to event messages.
Signal Ground	An electrical ground potential to which interconnect signals are referenced
Site Number	The part of a Carrier Local Address that identifies a particular instance of a given FRU Site Type within a MicroTCA Carrier. For instance, Site Number would distinguish among multiple CUs or PMs.
Site Type	The part of a Carrier Local Address that identifies the type of a FRU site, distinguishing for instance, a AdvancedMC site from a CU site
Single-Width Module	AdvancedMC Module with a width around 74 mm which fits in a Single-Width AdvancedMC Slot
Slot	The union of a Connector and a Card Guide that defines the position of one AdvancedMC, MCH, Power Module, OEM Module or CU. Slots are similar in concept to the Bays used in the AMC.0 specification. A MicroTCA Subrack typically contains multiple Slots.
Slot Number	Uniquely identifies a Slot within a Shelf
Standard Air	A complex substance suitable for electronic cooling, with carefully specified properties

Property of CERN - For Internal Use Only – External Distribution Prohibited

Table 1-1 Glossary (continued)

Term or acronym	Description
Startup PM	A Power Module selected by the Power Subsystem during power up, to operate in autonomous mode and automatically provide Management Power, asserts ENABLE#, and provide Payload Power to CU and conditionally to MCH Power Channels that are present.
Stiffener	A mechanical member designed to prevent a Board or Backplane from flexing
Subrack	A mechanical assembly that provides the interface to Modules, including AdvancedMCs, and consists of the Card Guides, ESD discharge, alignment/keying, Handle interface, Face Plate mounting hardware, EMC Gasketing, and Backplane interface
System Event Log (SEL)	Persistent Storage for events as defined by IPMI
System Manager	A level of management functionality above the Shelf Manager charged with the management of an entire system, whatever that may mean in a specific implementation
System Manager Interface	The communication interface between Shelf Manager and System Manager
Tier	A horizontal row of Modules across a Shelf
Tier Number	A value to uniquely identify a Tier within a Frame or a MicroTCA Carrier
Tongue	The mating interface of a plug or a PCB that mates with a MicroTCA backplane connector
Victim	A signal that is subject to unwanted distortions due to inductive or capacitive coupling with Aggressor signals
WEEE	Waste from Electrical and Electronic Equipment (directive)
xDSL	x Digital Subscriber Line (of any type)
Zone 2	A region used for I/O expansion typically to the left of an AdvancedMC Connector within a Slot (standard vertical orientation, viewed from the front)
Zone 3	A region used for I/O expansion typically above an AdvancedMC Connector within a Slot (standard vertical orientation, viewed from the front)

Property of CERN - For Internal Use Only – External Distribution Prohibited

Mechanical 2

¶ 1 This section of the MicroTCA specification defines essential mechanical information for the designer, manufacturer, integrator, or user of a PICMG® MicroTCA system. It describes definitions and requirements for complete mechanical interface dimensions at the Subrack and Shelf level to support Advanced Mezzanine Card Modules (AdvancedMC Modules). The purpose of this section is to specify dimensions which will ensure mechanical interchangeability of AdvancedMC Modules.

¶ 2 The Mechanical requirement for AdvancedMC Modules is defined in the PICMG® AMC.0 Advanced Mezzanine Card Base Specification, Chapter 2 “Mechanical”.

2.1 Mechanical overview

¶ 3 Section 1, “Introduction and objectives” introduced the primary elements for designing the MicroTCA system. This mechanical section is divided as follows:

- “Mechanical overview”
- “Dimensions, tolerances, drawing symbols, and nomenclature”
- “Mechanical concept”
- “AdvancedMC Module orientation, location, and positioning”
- “Slot detail dimensions”
- “Backplane”
- “Subrack dimensions”
- “Shelf”
- “Cable management”
- “Power entry/Power Module”
- “MCH Module”
- “Air flow management”
- “Auxiliary Connector (Zone 2 and Zone 3) keying”
- “MicroTCA Cube”
- “MicroTCA Pico”
- “MicroTCA filler panels”
- “Cooling Units (CUs)”
- “Subrack/Shelf environmental”

Property of CERN - For Internal Use Only – External Distribution Prohibited

2.1.1 Terminology

- The AdvancedMC Modules are defined in PICMG® AMC.0.
- The Subrack defines only the AdvancedMC (Half-Height, Mid-size, Full-Height), MicroTCA Carrier Hub, or Power Module interfaces, and not the Shelf dimensions. This applies also to a Cube and/or Pico solution.
- If the outer Shelf dimensions coincide with the outer Subrack dimensions, then the outer dimensions define a Shelf.

Requirements

REQ 2.1 The Shelf **shall** be defined by the overall MicroTCA system height, width, and Depth in accordance to 19 in. (IEC 60297-x) or Metric (IEC 60917-x) practice. This **may** include the cooling and cable management features.

REQ 2.2 The Cube and/or Pico system **may** use details thereof, or **may** use an application-specific outer form factor.

Note: The following drawings identify dimensional lines only and do not indicate methods of product design or production.

2.1.2 Typical arrangement examples

¶ 4 The following figures show examples of typical mechanical arrangements for MicroTCA systems:

Figure 2-1 Overview example

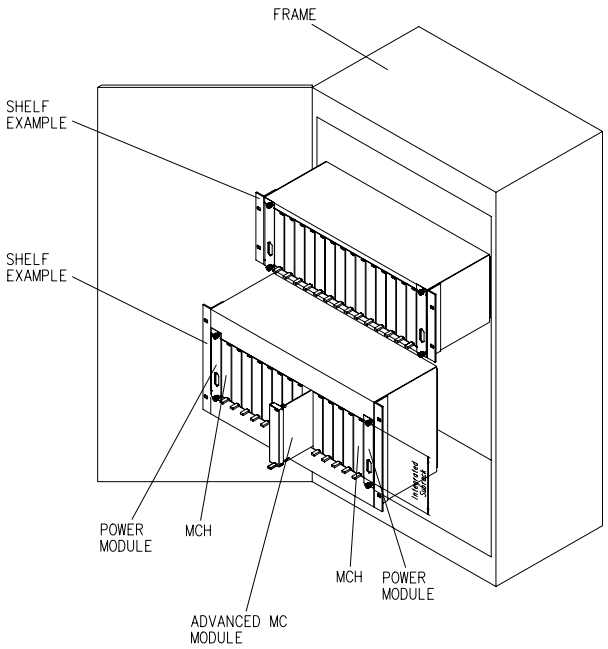

Property of CERN - For Internal Use Only – External Distribution Prohibited

Figure 2-2 Shelf examples for Single-Width (75 mm) and Double-Width (150 mm) AdvancedMC Modules

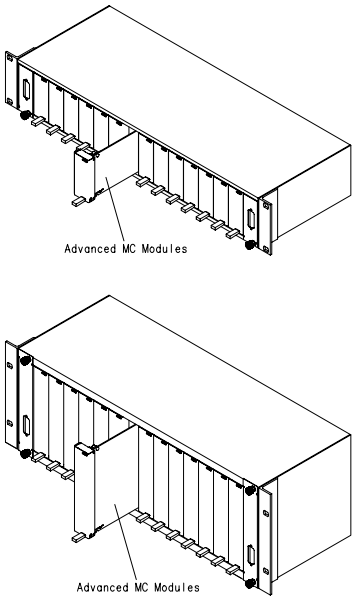

Figure 2-3 Shelf detail example

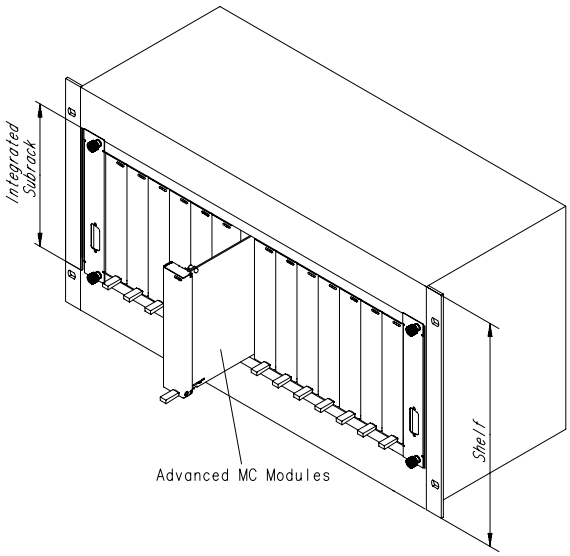

Property of CERN - For Internal Use Only – External Distribution Prohibited

Figure 2-4 Multiple Shelves in a Frame example

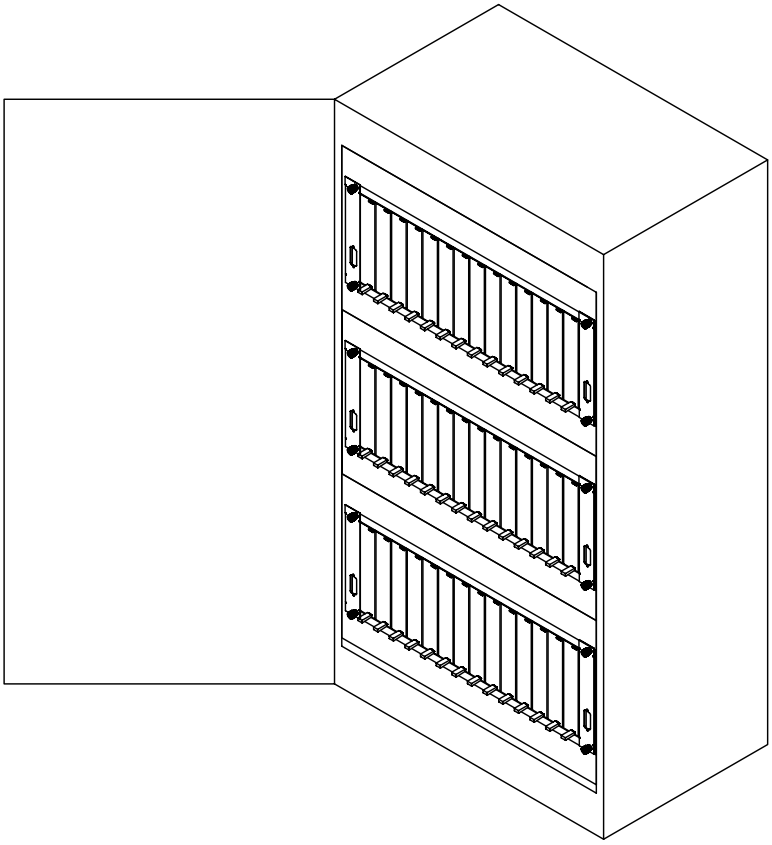

Figure 2-5 Single Cube on a mounting plate example

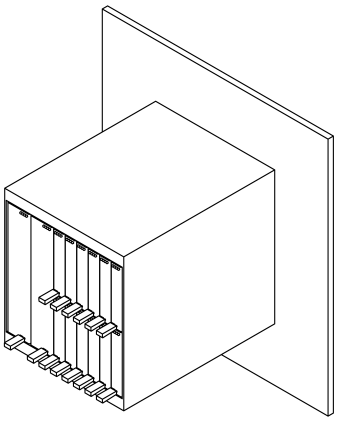

Property of CERN - For Internal Use Only – External Distribution Prohibited

Figure 2-6 Multiple Shelves in a Frame example

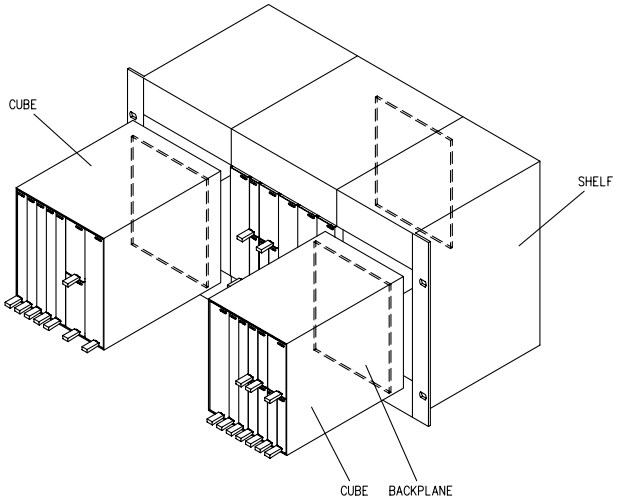

Figure 2-7 Pico on a panel example

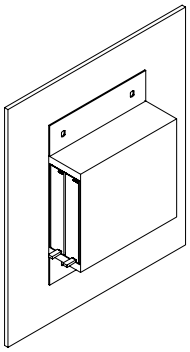

Figure 2-8 Pico on a motherboard host example

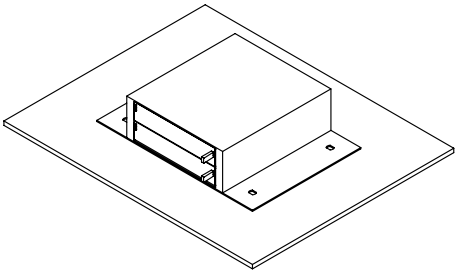

Property of CERN - For Internal Use Only – External Distribution Prohibited

2.2 Dimensions, tolerances, drawing symbols, and nomenclature

¶ 5 All dimensions are in millimeters (mm) or other appropriate Metric units, unless otherwise noted. The drawing symbols are defined in ISO 1101. A brief description of some of these symbols is shown in Table 2-3, "Sample drawing symbols".

Requirement

REQ 2.3 Dimensions and tolerances (see Table 2-1 and Table 2-2), drawings symbols (see Table 2-3), and nomenclature (see Table 2-4) in this section are required to guarantee interoperability and **shall** be met in order to claim compliance.

Table 2-1 General tolerance guidelines for PCBs (Backplane)

	Feature Fabrication	Tolerance (mm)
A	Routed edge to datum	±0.13
B	Unplated hole diameter	+0.05 –0.025
C	Hole location (radial dimension to datum)	±0.1
D	Board thickness	± 10%

Table 2-2 General tolerance guideline for mechanical components

	Feature Fabrication	Tolerance (mm)
A	Standard feature size resulting from a single process (i.e., hole diameter, square, etc.)	±0.13
B	Standard feature size resulting from more than one process (i.e., countersunk hole, etc.)	± 0.2
C	Raw edge location to raw edge location (i.e., length, cut/sheared end/edge to cut/sheared end/edge, etc.)	± 0.25
D	Location of one feature to another feature on a single surface (i.e., hole to hole, hole to cut/sheared end/edge, etc.)	± 0.25
E	Location of a feature to a raw edge (i.e., hole to cut/sheared end/edge, etc.)	± 0.25
F	Location of an edge resulting from a secondary process to a raw edge (i.e., cut/sheared end/edge to a bend, cut/sheared end/edge to a secondary machined surface, etc.)	± 0.3
G	Location of a feature to an edge resulting from a secondary process (i.e., hole to bend, hole to a secondary machined surface, etc.)	± 0.3
H	Location of an edge resulting from a secondary process to an edge resulting from a tertiary process (i.e., bend to bend, secondary machined surface to a tertiary machined surface, etc.)	± 0.5
I	Angularity	± 1°
K	Assembly tolerances	defined in the drawings

Property of CERN - For Internal Use Only – External Distribution Prohibited

Table 2-3 Sample drawing symbols

Symbol	Meaning
A	Datum. This callout shows where datum A is (the vertical line in this example).
0,13	Referenced dimension. This dimension is toleranced in other drawings in this specification.
21,33	Theoretically exact dimension. There are no tolerances on this dimension.
// 0,13 A	Parallelism. The toleranced dimension in this example must remain parallel to within 0.13 mm of datum A.
▱ 0,05	Flatness. The surface in this example must lie within two planes 0.05 mm apart.
⊥ 0,2 K	Perpendicularity. The referenced dimension in this example must lie within two parallel planes perpendicular to datum K and 0.2 mm apart.
⌖ 0,13 G H	True position. In this example, the axis of the referenced holes must be within 0.13 mm axis perpendicular to reference datums G and H.

Table 2-4 Nomenclature

Heights	Description
H1	Subrack Aperture Height - Mandatory
H3	Guidance height of Subrack for PCBs - Mandatory
H4	Aperture height between Card Guides
H5	Mounting centre distance for optional locking (Filler panel etc.)
H6	Optional Locking height (Filler panel etc.)
H7	Mounting centre distance for Backplanes
H8	Backplane height
H9	Rear Subrack aperture height - Backplane side
H10	Subrack front height with optional attachment flange
H11	Subrack rear height with optional attachment flange
Widths	**Description**
W1	Subrack Aperture Width
W2	Grid Width
W3	Max. Subrack Aperture Slot width of Modules
W4	Shelf Body Width
W5	Frame mounting points
W6	Shelf Width

Property of CERN - For Internal Use Only – External Distribution Prohibited

2.3 Mechanical concept

Requirements

REQ 2.4 The mechanical MicroTCA structure **shall** hold the AdvancedMC Modules, MCH Modules, Power Modules, JTAG Switch Modules, FRU ROMs, and the Backplane into the correct alignment.

REQ 2.5 The architecture defines a rack-mountable Shelf, which **may** be divided by Cubes, or free-standing Cubes, or Pico subassemblies to be populated with AdvancedMC Modules. See example applications in Section 2.1.2, “Typical arrangement examples”.

REQ 2.6 The architecture **shall** provide AdvancedMC Modules directly in a Backplane.

REQ 2.7 The standard orientation of the subrack **shall** be vertical. The horizontal direction is allowed by following the vertical dimensions.

REQ 2.8 Height dimensions of Shelves **should** be designed using increments of 1 U/SU, in accordance with IEC 60297 and IEC 60917 to follow common equipment practice.

REQ 2.9 In the vertical direction, Subracks **shall** be divided into subsections of Tiers. The minimum requirement is one Tier; the maximum **may** be 4 Tiers. See Figure 2-9.

REQ 2.10 The union of a Connector and a Card Guide is a Slot. In the horizontal direction, Subracks **shall** be divided into subsections of Slots. See Figure 2-9 and Section 2.5, “Slot detail dimensions”.

Property of CERN - For Internal Use Only – External Distribution Prohibited

Figure 2-9 MicroTCA Subrack/Backplane/Face Plate grid—front view

Numbering compliant to AdvancedTCA 3.0 Release 2.0 PICMG Base

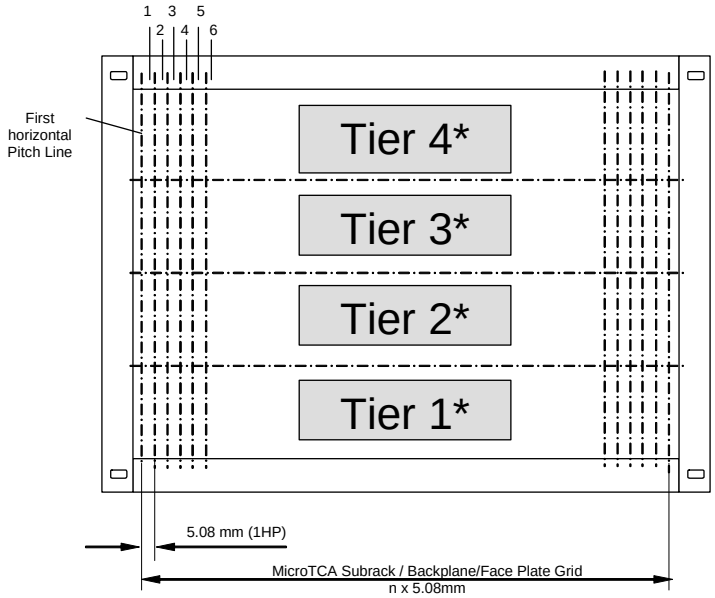

Numbering compliant to Telcordia GR2914CO R3-5

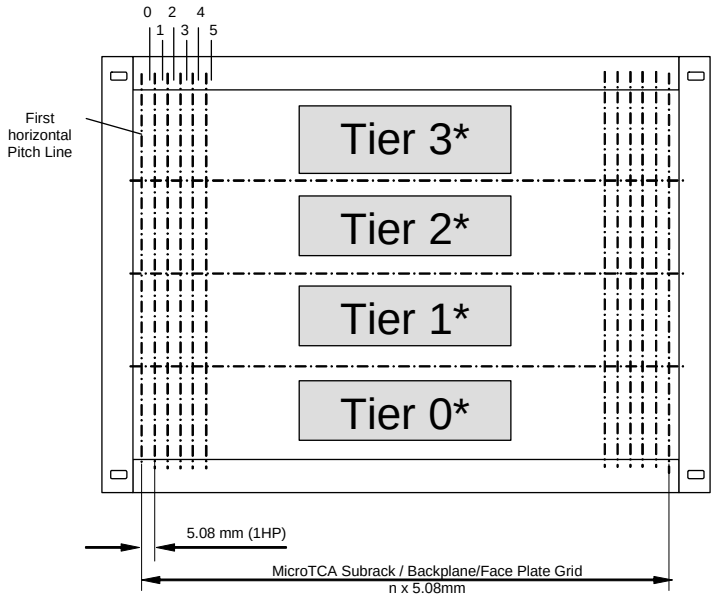

Note: * For a description of the physical Slot and Tier numbering, see Section 2.18.6.

Property of CERN - For Internal Use Only – External Distribution Prohibited

Table 2-5 19 in. and metric (ETSI) maximum grid availability

Subrack Type	max. No. of HPs
IEC 60297 (19 inch)	87
IEC 60917 (metric) ETSI	96

Figure 2-10 Shelf definition—front view

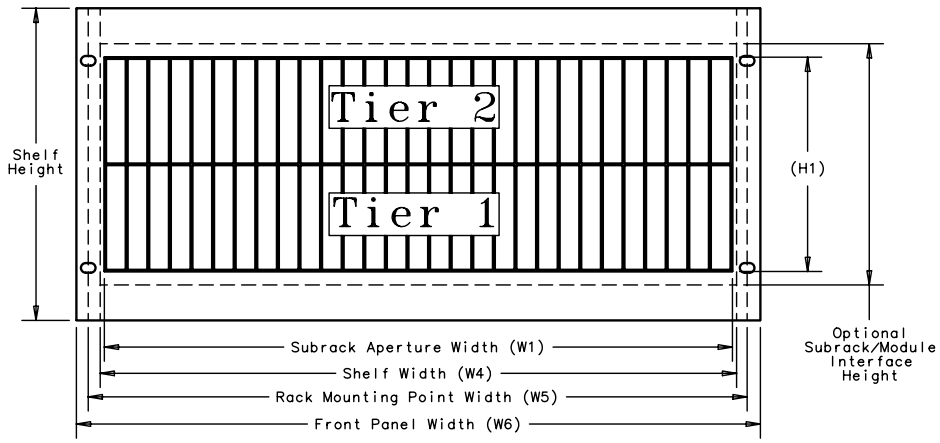

Figure 2-11 Cube definition—front view

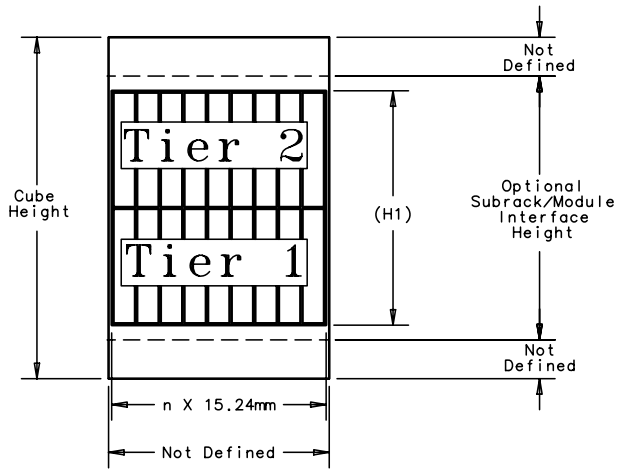

Property of CERN - For Internal Use Only – External Distribution Prohibited

Figure 2-12 Pico definition—front view

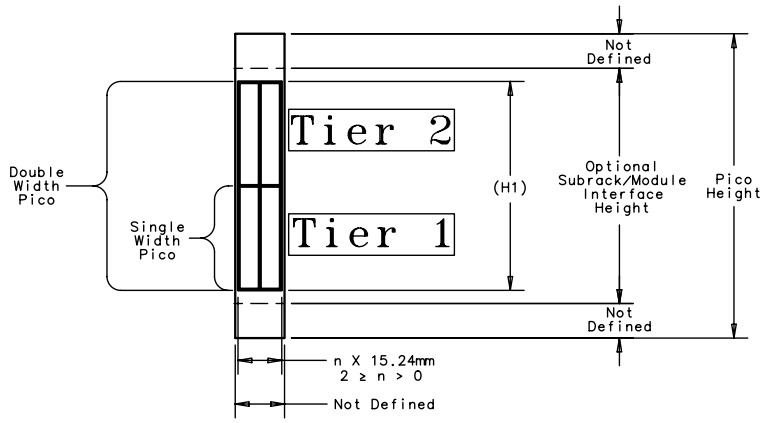

Figure 2-13 Simplex MicroTCA array—front view

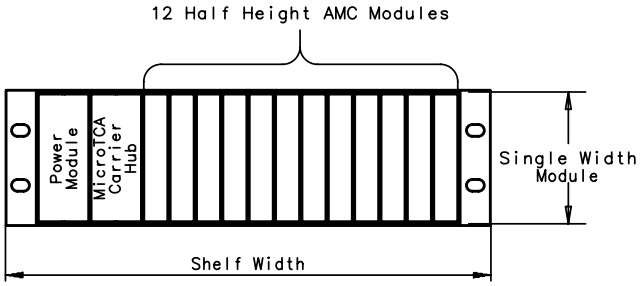

Figure 2-14 Mechanical mandatory grid, Single-Width—front view

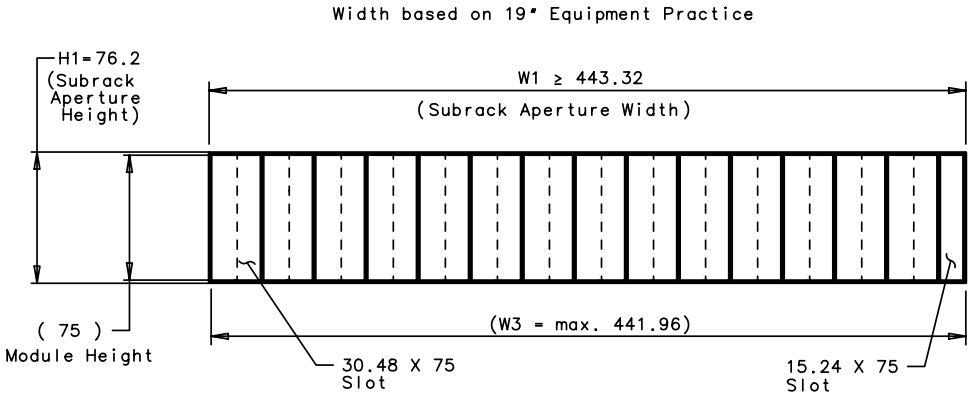

Property of CERN - For Internal Use Only – External Distribution Prohibited

Figure 2-15 Mechanical mandatory grid, Double-Width—front view

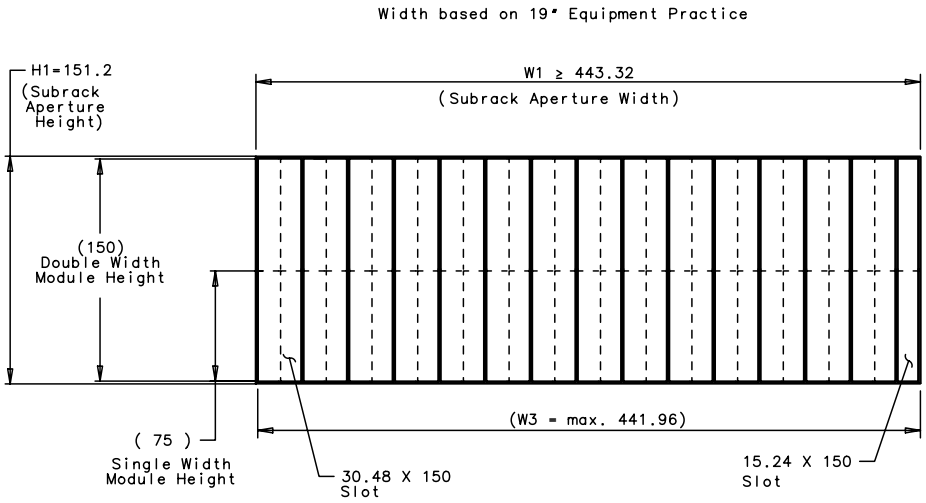

Figure 2-16 Mechanical mandatory grid, optional interpretation—front view

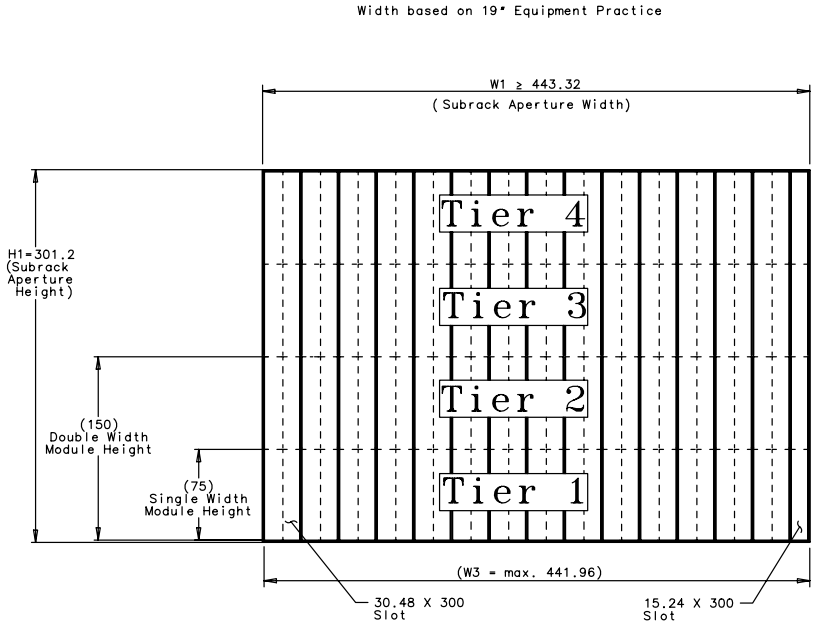

Property of CERN - For Internal Use Only – External Distribution Prohibited

Figure 2-17 Mechanical optional grid, Single-Width—front view

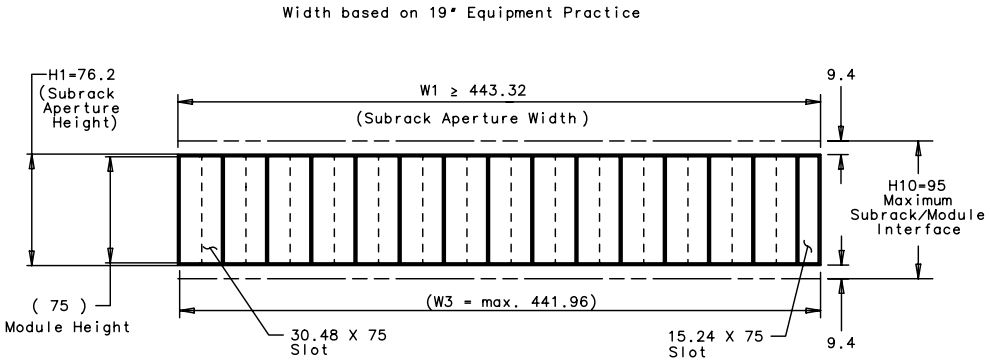

Figure 2-18 Mechanical optional grid, Double-Width—front view

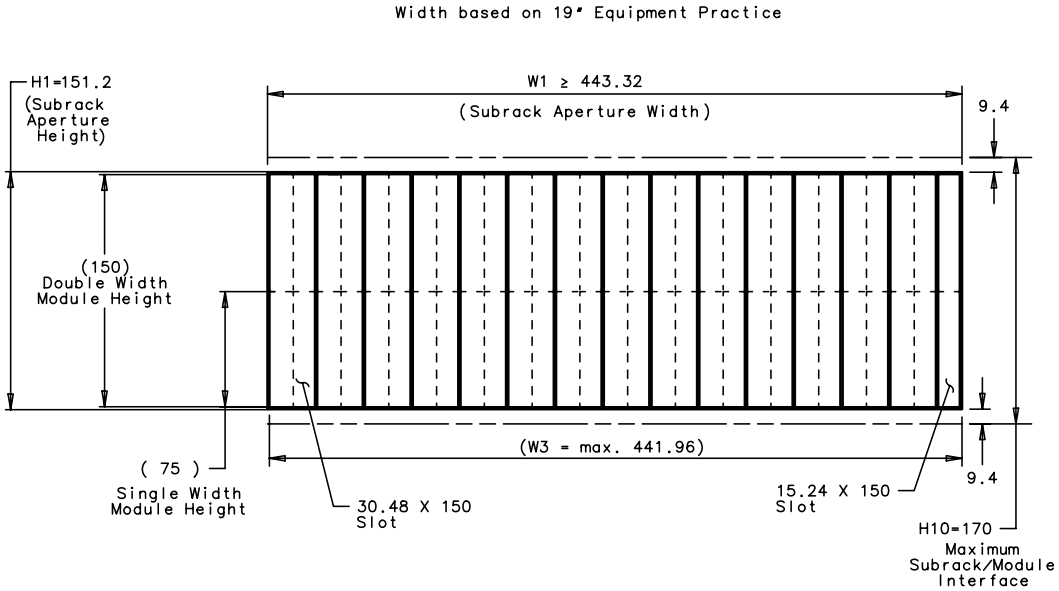

Property of CERN - For Internal Use Only – External Distribution Prohibited

Figure 2-19 Mechanical optional grid, optional interpretation—front view

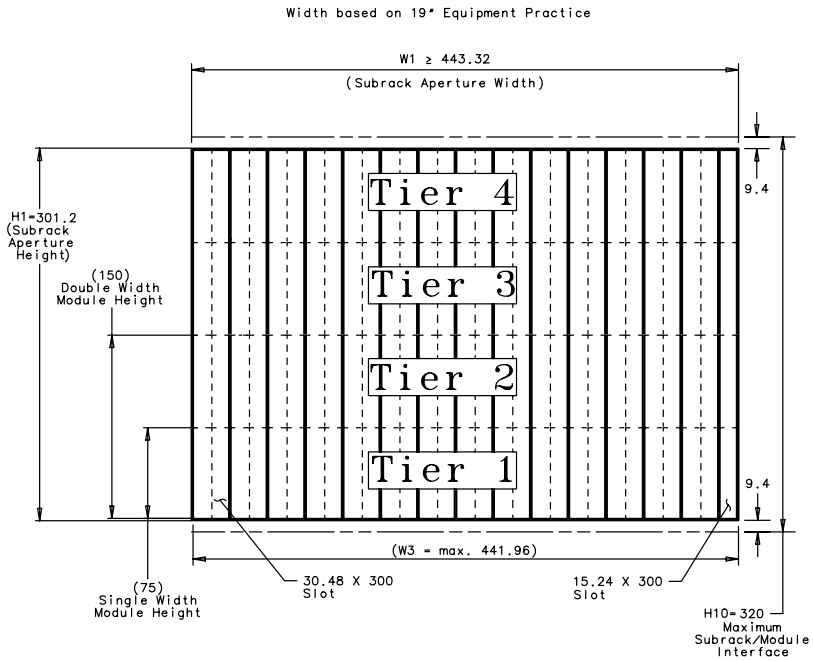

Figure 2-20 Mechanical optional grid—front view

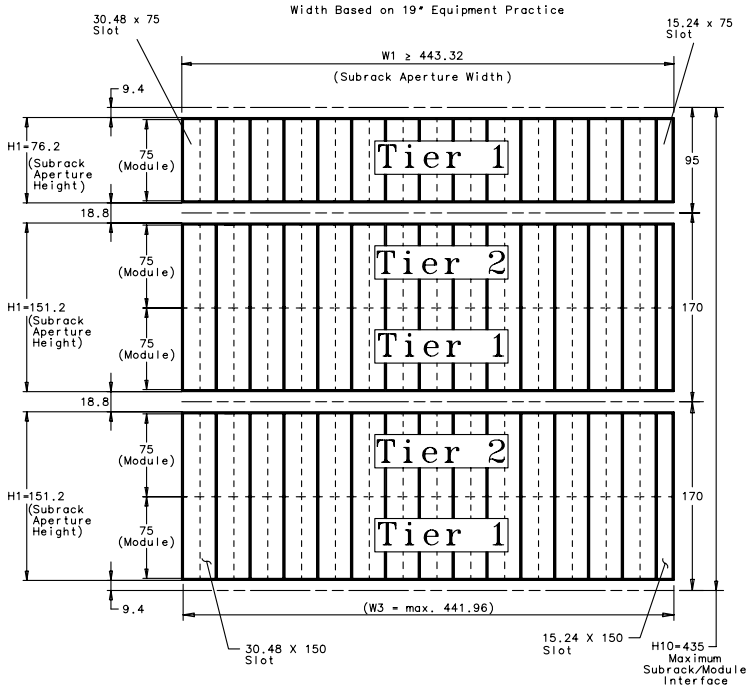

Property of CERN - For Internal Use Only – External Distribution Prohibited

Figure 2-21 MicroTCA Shelf, flush-mounted in a Frame, 300mm Depth—side view

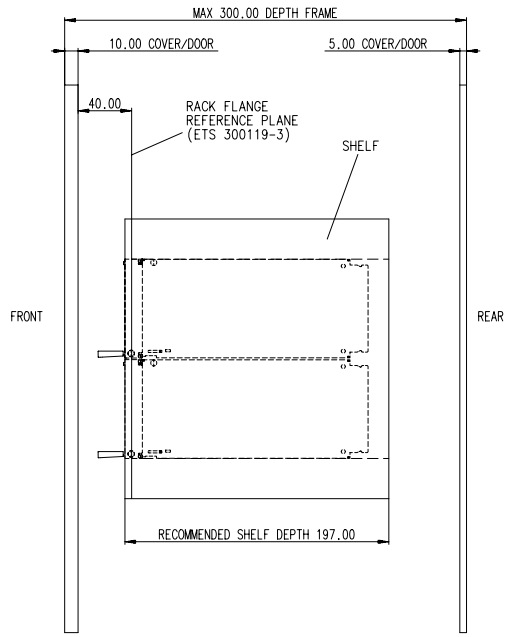

Figure 2-22 MicroTCA Shelf, recess-mounted in a Frame, 300mm Depth—side view

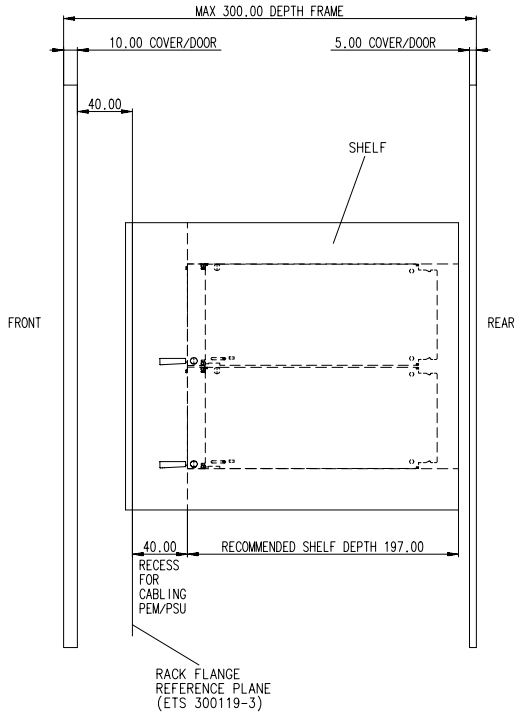

Property of CERN - For Internal Use Only – External Distribution Prohibited

Figure 2-23 MicroTCA Shelf in a Frame, 600 depth (single Shelves back-to-back)—side view

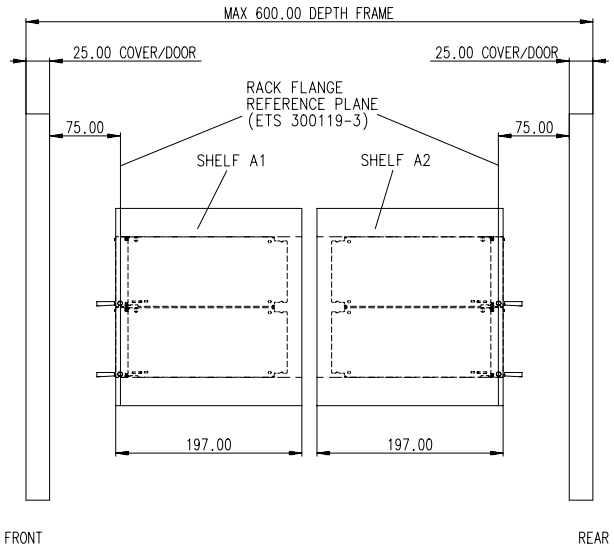

2.4 AdvancedMC Module orientation, location, and positioning

¶ 6 The Subrack MicroTCA configurations position AdvancedMC Modules, MCH Modules, and Power Modules with respect to each other and the Backplane. The positioning is accomplished by using Card Guides, a Card Guide Support Plate (CGSP), and the Backplane interface.

¶ 7 Subrack materials and design details are not defined. Only the dimensions which govern the interface of AdvancedMC Modules to the Subrack and Backplane are defined. The horizontal grid of the MicroTCA system is 15.24 mm for Half-Height Modules and 30.48 mm for Full-Height Modules. The vertical grid of the MicroTCA Shelf is in accordance to the IEC 60297-1 (inch-based) or IEC 60917-2 (metric-based) standards.

¶ 8 The MicroTCA architecture can be subdivided into sections which are administered by one or more Carrier Managers.

2.4.1 Module orientation

Requirements

REQ 2.11 AdvancedMC Modules within a Shelf/Subrack/Cube/Pico **shall** be defined as being in the standard orientation when the AdvancedMC Modules are positioned in a vertical orientation. When viewed from the front, the latch mechanism of the AdvancedMC Modules are along the lower edges of the Modules. See Figure 2-3, “Shelf detail example”.

REQ 2.12 If a physical implementation of a Shelf/Subrack/Cube/Pico requires the AdvancedMC Modules to be orientated horizontally, when viewed from the front, the orientation of the

Property of CERN - For Internal Use Only – External Distribution Prohibited

AMC.0 Modules **shall** be with the latch mechanisms along the right edges of the Modules.

2.4.2 Module positioning, horizontal—mandatory

Requirements

REQ 2.13 The horizontal positioning of the Modules **shall** be in major grids of 30.48 mm for Full-Height Modules, 20,32 mm for Mid-Size Modules and 15.24 mm for Half-Height Modules. See Figure 2-24, Figure 2-25 and Figure 2-26.

REQ 2.14 Full-Height Modules, Mid-Size Modules and Half-Height Modules **may** be mixed and arranged in any order, horizontally across the MicroTCA Subrack.

Figure 2-24 Full-Height Module positioning

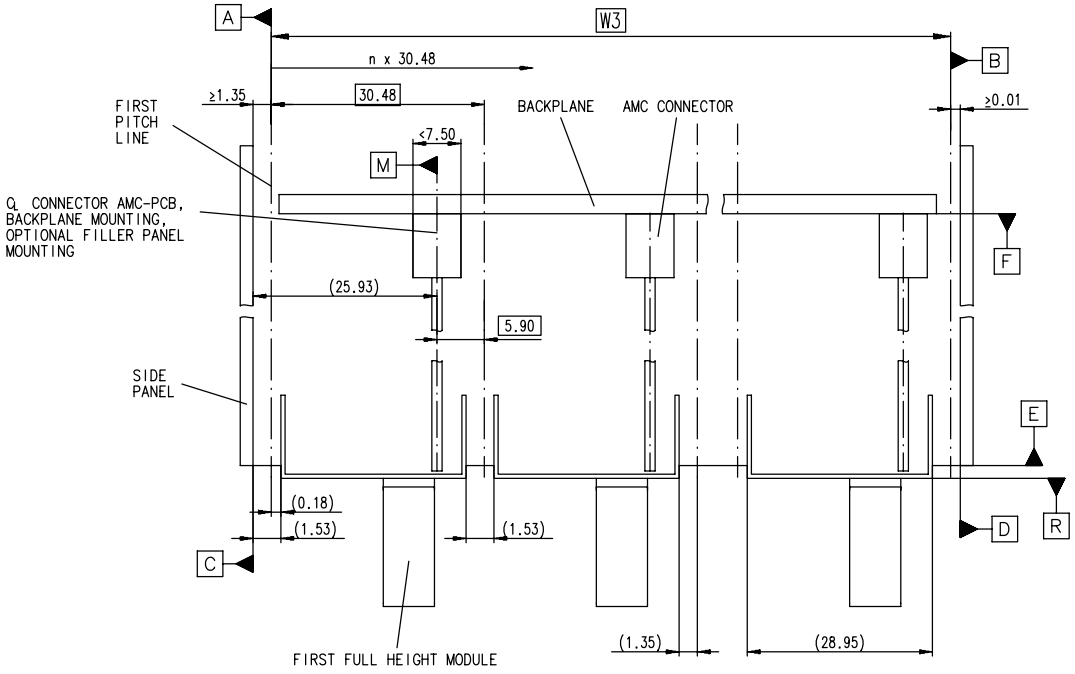

Note: This positioning is not usable for MCH Modules located in the outermost left position. See Section 2.11, “MCH Module”.

Property of CERN - For Internal Use Only – External Distribution Prohibited

Figure 2-25 Mid-Size Module positioning

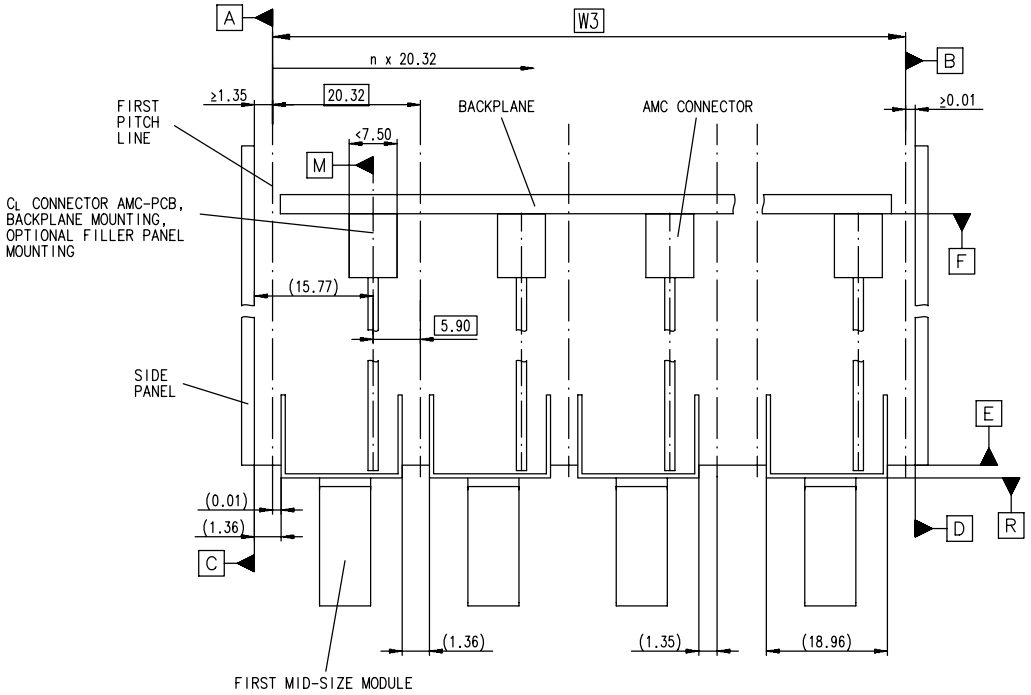

Figure 2-26 Half-Height Module positioning

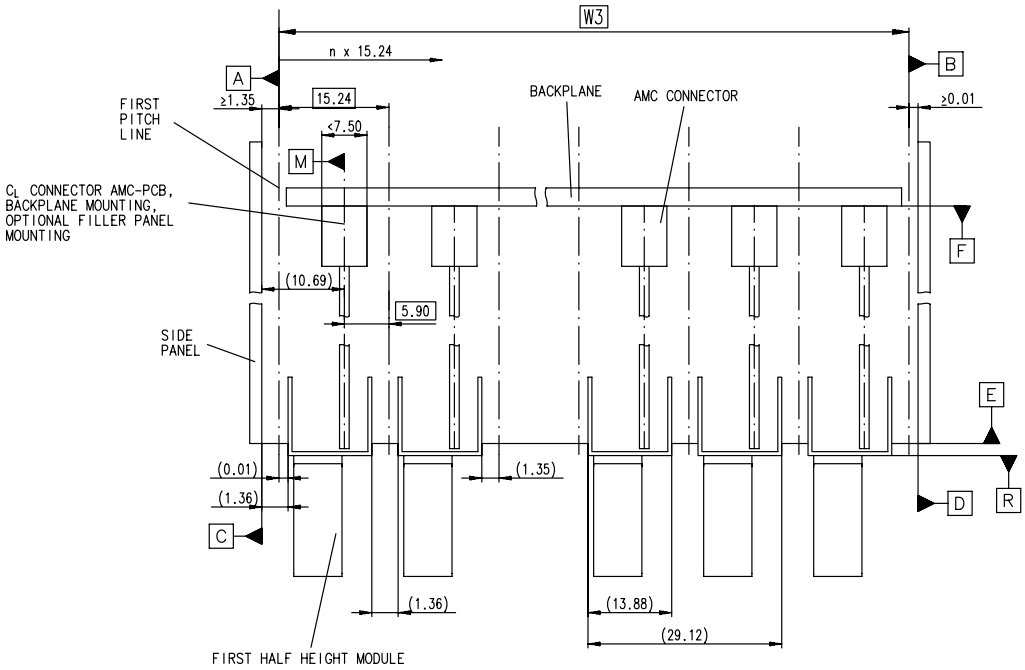

Note: This positioning is not usable for MCH Modules located in the outermost left position. See Section 2.11, “MCH Module”.

Property of CERN - For Internal Use Only – External Distribution Prohibited

2.4.3 Module positioning, vertical—mandatory

Requirement

REQ 2.15 The vertical Module positioning **shall** be as shown in Figure 2-28, Figure 2-29, and Figure 2-30.

Figure 2-27 AMC.0 Subrack/Module interfaces (mandatory description)—side view

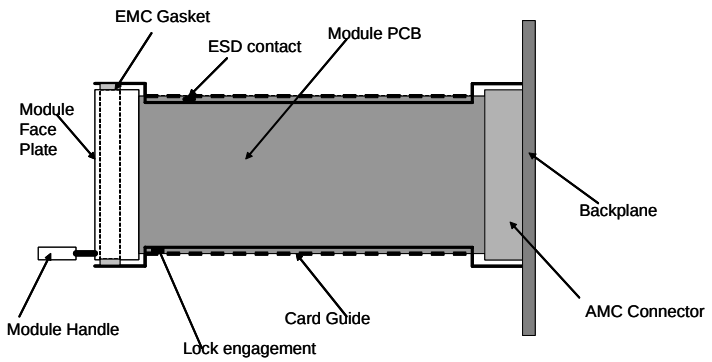

Figure 2-28 Subrack for Single-Width (75 mm) Modules

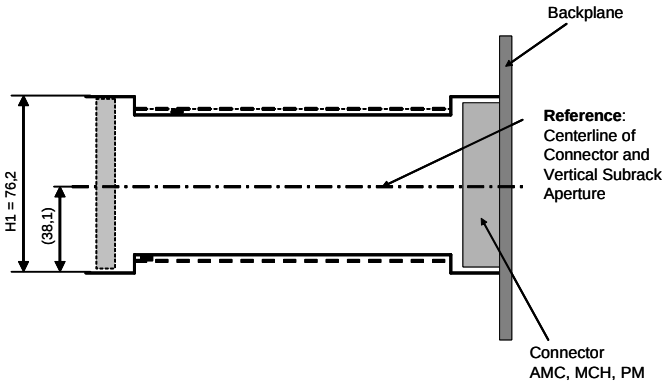

Property of CERN - For Internal Use Only – External Distribution Prohibited

Figure 2-29 Subrack for Double-Width (150 mm) Modules

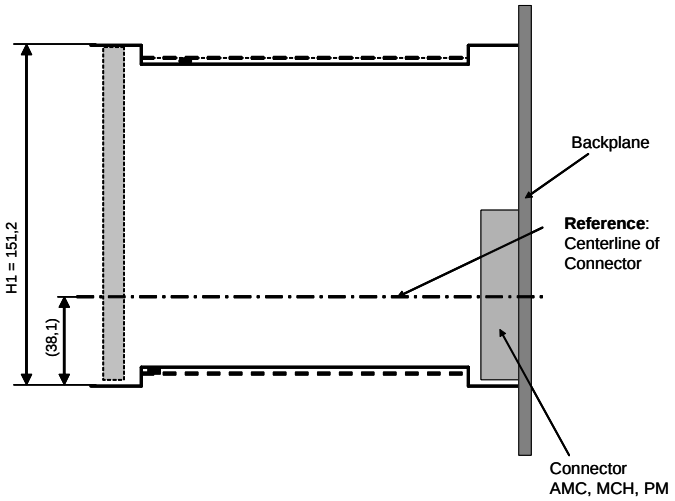

Figure 2-30 Mixed Subrack for 75 mm/150 mm Modules

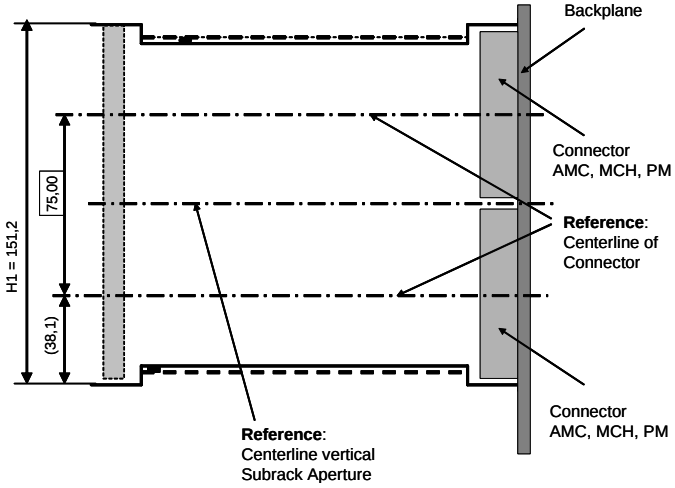

2.4.4 Module positioning, depth—mandatory

¶ 9 Based upon a Face Plate thickness of 0.65 mm as defined in AMC.0, optional Face Plates, filler panels have to increase (datum R plus additional thickness).

Requirement

REQ 2.16 Dimensions vertical to the Backplane **shall** be as shown in Figure 2-31.

Property of CERN - For Internal Use Only – External Distribution Prohibited

Figure 2-31 Subrack with AMC.0 Module—top view

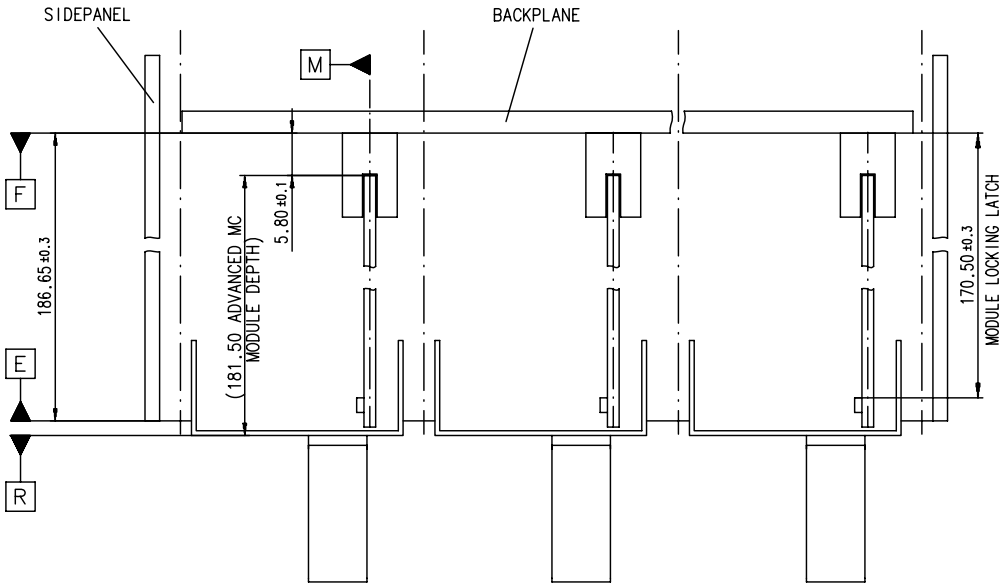

2.5 Slot detail dimensions

¶ 10 This section describes the mechanical features required to interface with an AdvancedMC Module and provide Module/PCB guidance, Module/ESD Grounding, Module/EMC shielding, and Module/latching.

2.5.1 Slot

¶ 11 A Slot defines the union of a Connector and a Card Guide and defines the position of one AdvancedMC, MCH, or Power Module (PM). A MicroTCA Subrack will contain multiple Slots (see Figure 2-9).

2.5.2 Slot configurations, subdividing Slots

¶ 12 AMC.0 currently defines six form factors for AdvancedMC Modules (see Figure 2-32).

¶ 13 The largest of these is a Double-Width, Full-Height Module. This Module occupies a vertical Subrack volume of 30.48 mm wide x 150.0 mm tall x 187.30 mm deep. Figure 2-34 shows how this Module could be subdivided into smaller Slot configurations.

Property of CERN - For Internal Use Only – External Distribution Prohibited

Figure 2-32 AMC.0 Module types

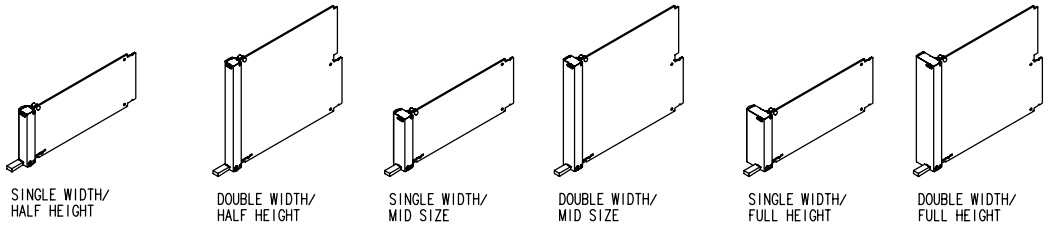

Figure 2-33 Double-Width, Full-Height Slot dividing examples

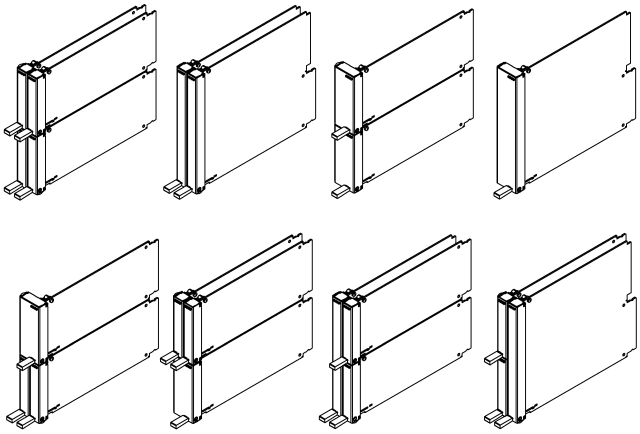

Figure 2-34 Single-Width, Full-Height Slot dividing examples

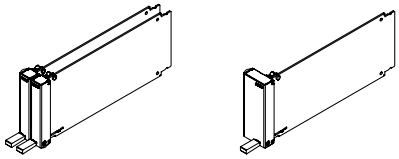

Property of CERN - For Internal Use Only – External Distribution Prohibited

2.5.3 Card Guide, Strut, and Card Guide Support Plate (CGSP)

¶ 14 The CGSP permits a 150 mm Double-Tier, Half-Height, and Full-Height Module Slot in a Subrack to be divided (converted or subdivided) into two 75 mm Single-Width, Half-Height, or Full-Height Single-Tier sections. For combinations see Figure 2-33.

¶ 15 Solutions are identified as follows:
In a pre-configured Double-Tier Subrack, the divided Slot(s) make use of both the position A and B CGSPs by creating a box section, see Figure 2-39. The two CGSPs A and B are fastened to the upper and/or lower Subrack member, as defined in Figure 2-36, or to the upper and/or lower Card Guide. The CGSP(s) provides a conductive path to Frame Ground for Module ESD discharge.

¶ 16 In a pre-configured Double-Tier Subrack, the divided Slot(s) make use of only the position B CGSP by increasing the material thickness to maximum (0.15 mm within the inter-Module Pitch Line). See Figure 2-39. The single CGSP B is fastened to the upper and/or lower Subrack member, as defined in Figure 2-36, or to the upper and/or lower Card Guide. The CGSP provides a conductive path to Frame Ground for Module ESD discharge.

¶ 17 For a field-replaceable Slot conversion, it is recommended to make use of a front-insertable FRU design which is attached to the Subrack via the optional Front Attachment Flanges (see Figure 2-42). CGSPs A and B or B only are suitable solutions.

Requirements

REQ 2.17 The Module Card Guide **shall** have a PCB guidance feature and **shall** be present at the top and bottom of every used Slot. See Figure 2-35 and Figure 2-36.

REQ 2.18 The Card Guide **may** be an integral, manufactured part of the Subrack or of a modular construction. See Figure 2-35 and Figure 2-36.

REQ 2.19 The Subrack **shall** permit interface geometry for the AdvancedMC Module Latch Mechanism. See Figure 2-39 and Figure 2-40.

REQ 2.20 The geometry for the AdvancedMC Module Latch Mechanism **may** be an integral manufactured part or a modular construction. See Figure 2-37, Figure 2-39, and Figure 2-40.

REQ 2.21 The Card Guide **should** be designed to provide maximum air passage for the Subrack/ Shelf components.

REQ 2.22 The Card Guides **shall** provide an electrically isolated means for the Module PCB support in the Subrack.

REQ 2.23 The Card Guides and Struts **shall** provide a lead-in feature to facilitate aligning the Module PCB into the Card Guide.

REQ 2.24 When the Module is fully inserted into the Connector, the Card Guide **shall not** constrain the Module. The back end of the Module PCB **shall** be solely supported by the Connector.

REQ 2.25 The Card Guides **shall** ensure an overlap with the Module PCB of at least 0.7 mm under all insertion/withdrawal and mating circumstances.

REQ 2.26 The Card Guides **shall** limit the rotation in the vertical direction of the Module PCB versus the Connector to ±0°20' under all mating circumstances.

REQ 2.27 Struts and Card Guides **may** be constructed as a single component, but the required dimensions **shall** remain unchanged.

Property of CERN - For Internal Use Only – External Distribution Prohibited

REQ 2.28 Module PCB centering features **should** be provided in the Card Guide.

REQ 2.29 The Subrack **shall** provide a single ESD discharge contact at the front top right edge. See Figure 2-39, Figure 2-40, and Figure 2-42.

REQ 2.30 To prevent Modules from shorting to the Card Guide Support Plate (CGSP), an electrical insulator capable of withstanding 500 V **shall** be added to the inside CGSP surface (surface facing the inside of the Module). The maximum insulator thickness **shall** be 0.1 mm.

REQ 2.31 For subdividing Slots into smaller Slots, CGSPs **should** be used. CGSPs **should** allow a Double-Width Slot to be divided into any of the Slot configurations shown in Figure 2-33 and a Single-Width Slot to be divided per Figure 2-34.

REQ 2.32 Alternatively, for reconfiguration of Slots into smaller Slot configurations in a Subrack with optional front attachment, front-insertable reconfiguration assemblies **may** be used.

REQ 2.33 For the reconfiguration of AdvancedMC Modules, CGSP Position A and/or Position B **may** be used. See Figure 2-37 and Figure 2-38.

REQ 2.34 For subdividing Double-Width Slots into Single-Width Slots, Struts and Card Guides **shall** be used.

REQ 2.35 The CGSPs **shall** be contained within the inter-Module Pitch line. See Figure 2-39 and Figure 2-40.

REQ 2.36 To prevent bypassing the intended Slot when inserting a Module, an inter-Slot barrier(s) **should** be present on both the upper and lower Subrack members.

2.5.3.1 AdvancedMC Module Card Guide in a Subrack

Figure 2-35 Card Guide definition, Single-Width/Double-Width/Mid-Size AdvancedMC Modules—front view

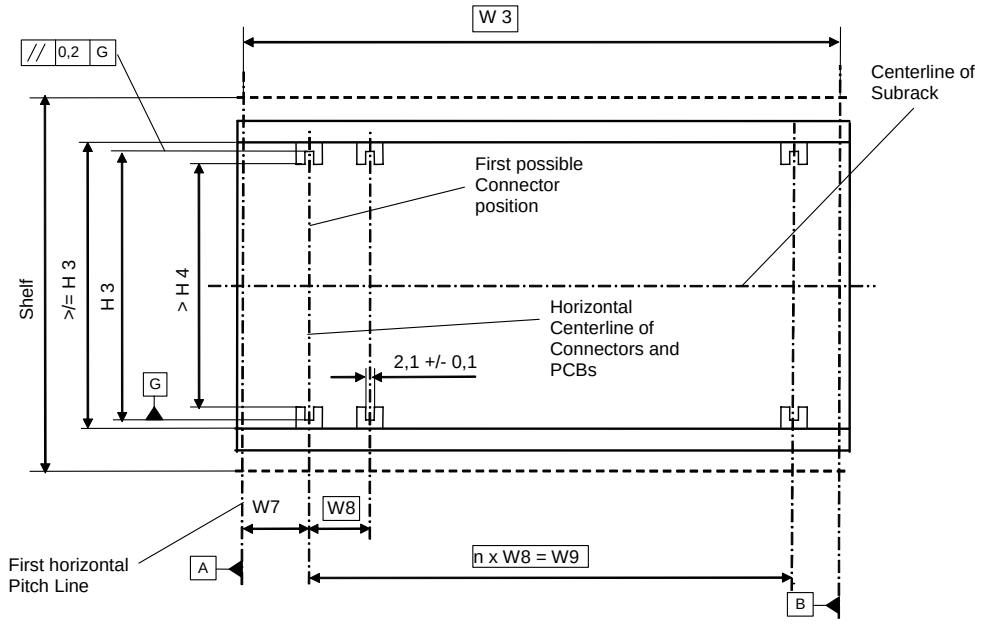

Property of CERN - For Internal Use Only – External Distribution Prohibited

Figure 2-36 Card Guide definition, two Single-Width Modules in a Double-Width Subrack

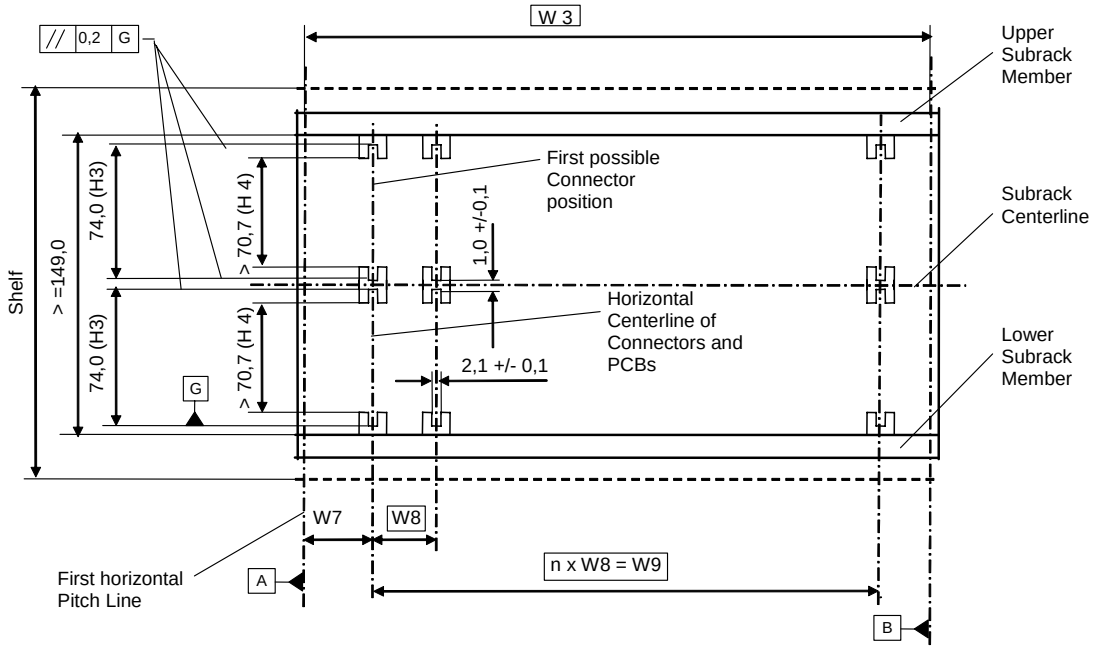

Table 2-6 Subrack Card Guide interface, height dimensions

AdvancedMC Width Module Size	AdvancedMC Height Module Size	H 3 ± 0.40	H 4 ± 0.40
Single	Half	74.00	70.70
	Mid		
	Full		
Double	Half	149.00	145.70
	Mid		
	Full		

Property of CERN - For Internal Use Only – External Distribution Prohibited

Table 2-7 Subrack Card Guide interface, width dimensions

AdvancedMC Width Module Size	AdvancedMC Height Module Size	W 3	W 7	W 8	n	W 9
Single	Half	426.72	9.34	15.24	27	411.48
		441.96			28	426.72
	Mid	426,72	14.42	20.32	20	406.40
	Full	426.72	24.58	30.48	13	396.24
	Half, Mid and Full mixed in any combination	max. 441.96	Depends on AMC.0 Module Heights			
Double	Half	426.72	9.34	15.24	27	411.48
		441.96			28	426.72
	Mid	426,72	14.42	20.32	20	406.40
	Full	426.72	24.58	30.48	13	396.24
	Half, Mid and Full mixed in any combination	max. 441.96	Depends on AMC.0 Module Heights			

Figure 2-37 Example of a Card Guide Support Plate (CGSP)

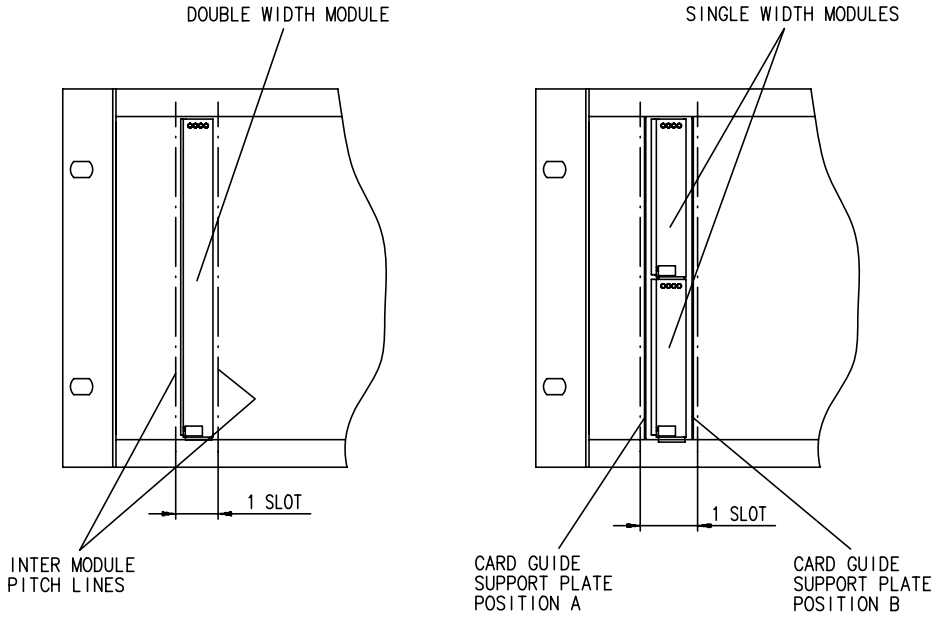

Property of CERN - For Internal Use Only – External Distribution Prohibited

Figure 2-38 Example of a Position A Card Guide Support Plate, Strut, and Card Guide

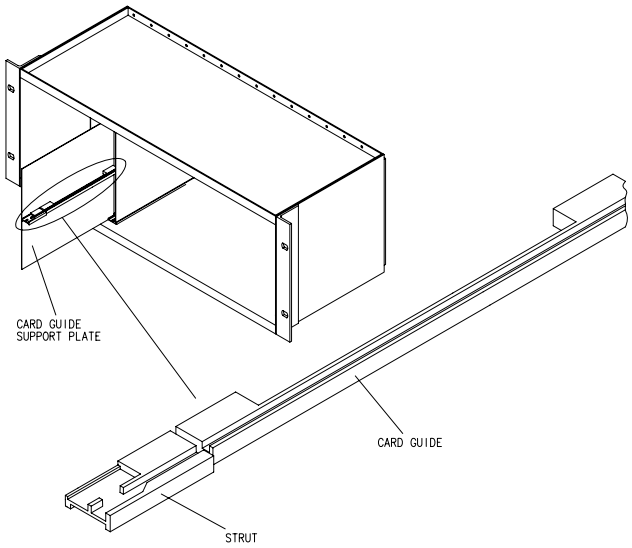

Property of CERN - For Internal Use Only – External Distribution Prohibited

Figure 2-39 Lock and ESD contact interface dimensions—Half-Height Module

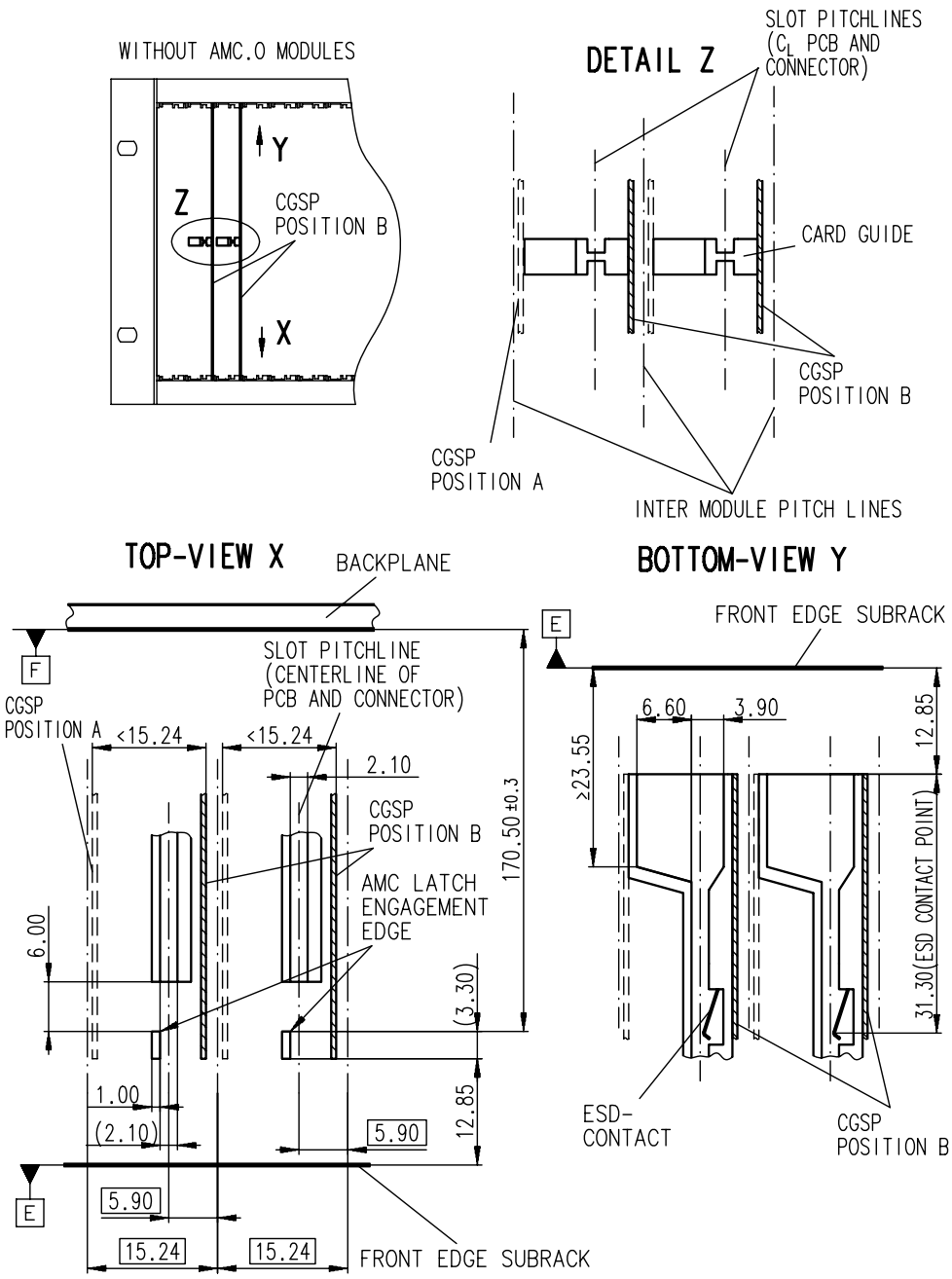

Requirement

REQ 2.37 CGSP Position A and B or CGSP Position A or B **may** be used.

Property of CERN - For Internal Use Only – External Distribution Prohibited

Figure 2-40 Lock and ESD clip interface dimensions—Full-Height Module

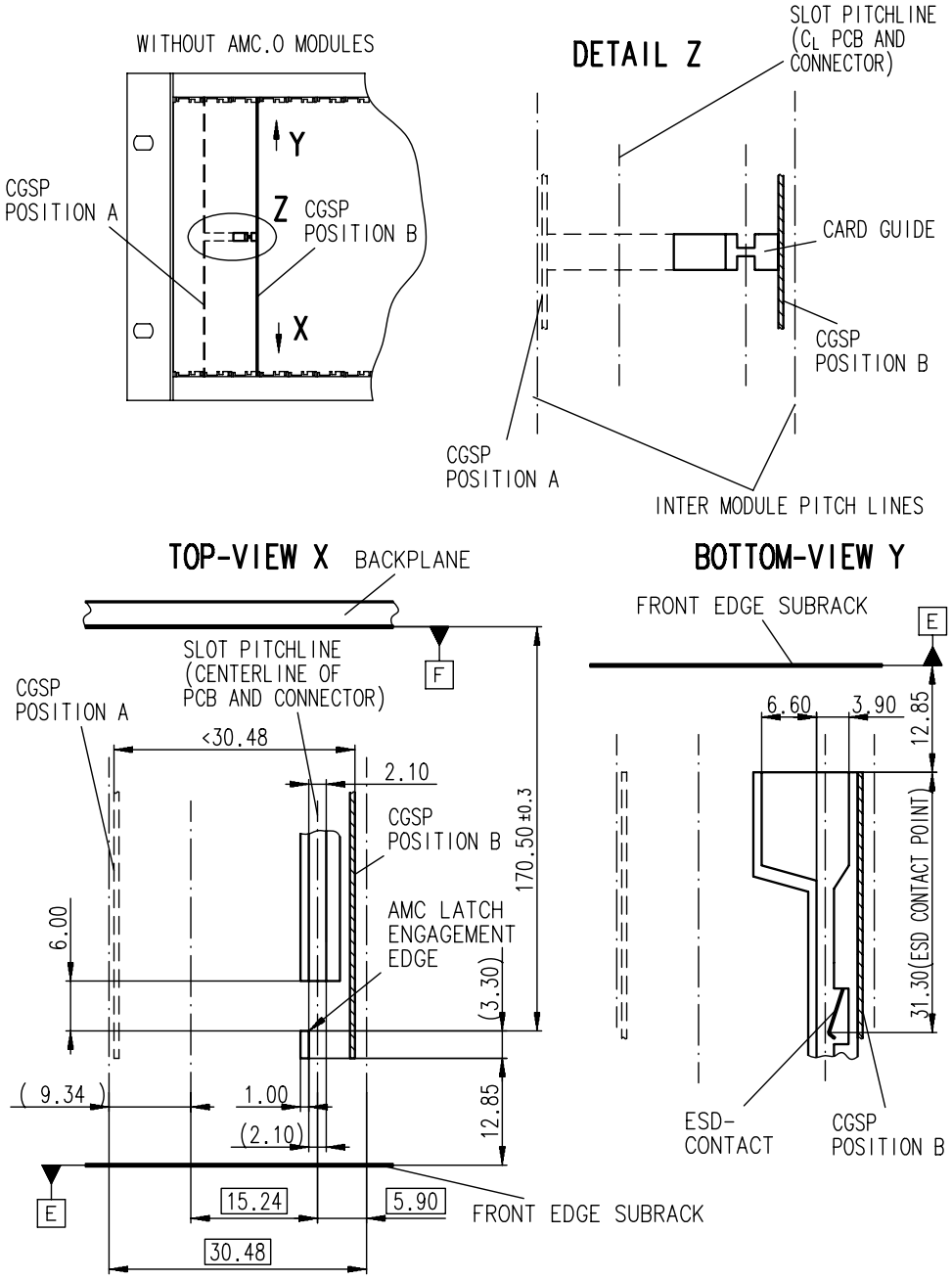

Requirement

REQ 2.38 CGSP Position A and B or CGSP Position A or B **may** be used.

Property of CERN - For Internal Use Only – External Distribution Prohibited

2.5.3.2 EMC interfaces

Requirements

REQ 2.39 The EMC Subrack gasket **shall** be mounted on the right side and on the top side of the front Subrack opening (when viewed from the front).

REQ 2.40 The front Subrack **shall** provide contact areas for EMC Gasket connection on the left side and on the bottom side of the Subrack opening (when viewed from their front).

REQ 2.41 The EMC Gasket and the gasket connection areas **shall** perform for 250 insertion/ extraction cycles on each slot without degradation of performance.

REQ 2.42 The EMC Gasket **shall** meet the criteria in the PICMG AMC.0 specification.

Figure 2-41 Subrack EMC interfaces, mandatory dimensions—detail view

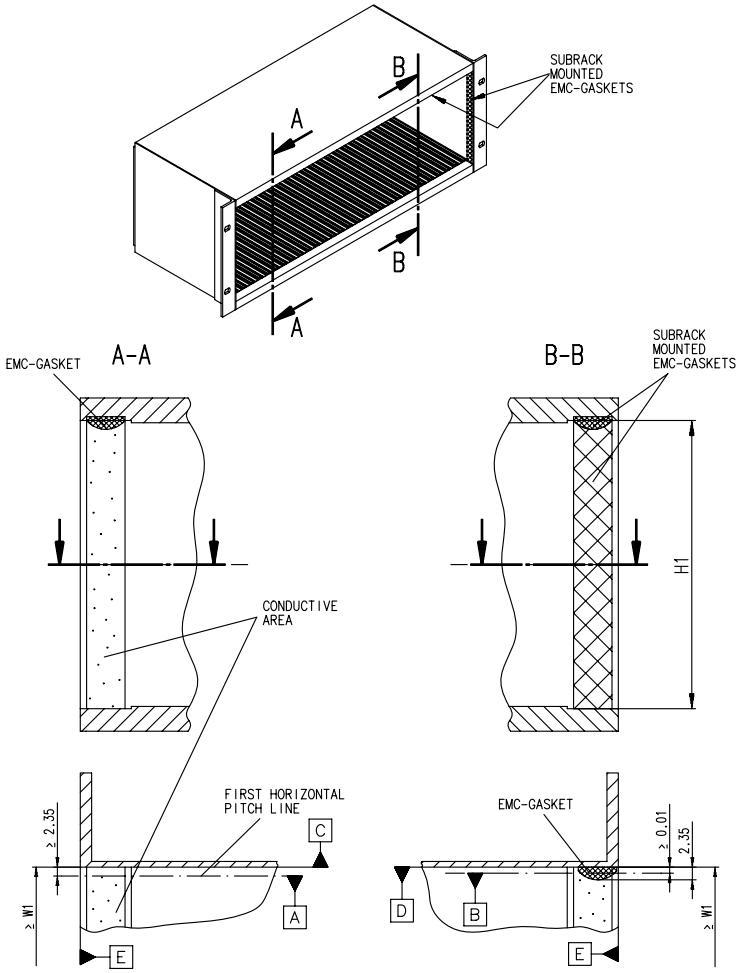

Property of CERN - For Internal Use Only – External Distribution Prohibited

2.5.4 Optional Subrack attachment plane

¶ 18 The optional attachment plane provides for the following additional features:

- The attachment of filler panels (low cost)
  See Figure 2-42 and Section 2.16, “MicroTCA filler panels”.
- The attachment of filler/airflow management devices (low cost)
- The attachment of front access conversion devices (field-replaceable)
  See Figure 2-42.
- The attachment of PMs (weight/size)
  See Section 2.10, “Power entry/Power Module”.
- The attachment of cable management devices
  See Section 2.9, “Cable management”.
- The attachment of additional AdvancedMC Module locking devices
  See Section 2.5.5, “AdvancedMC Module—optional locking”.

Figure 2-42 Subrack/Module interface w/optional filler panel, description—side view

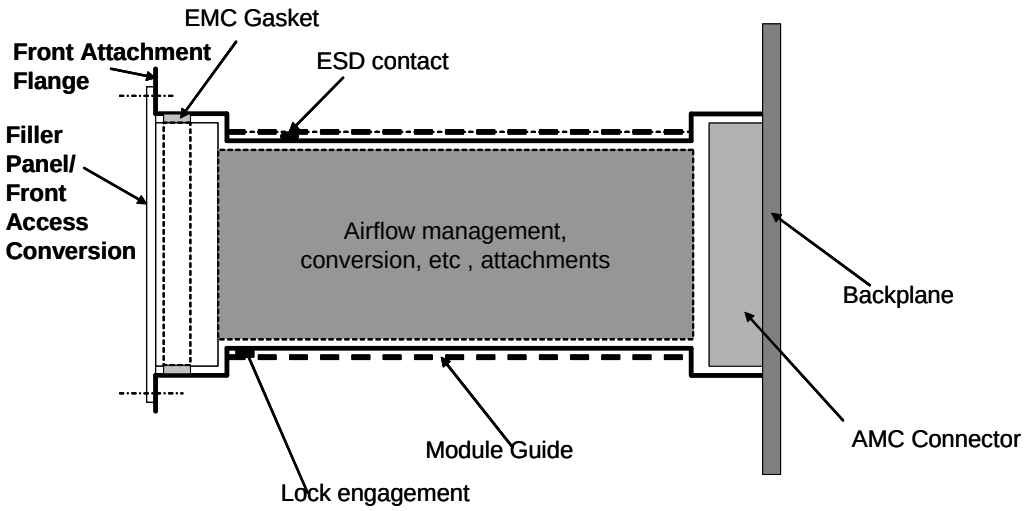

Property of CERN - For Internal Use Only – External Distribution Prohibited

Figure 2-43 Subrack/Module interface w/optional filler panel, dimensions—side view

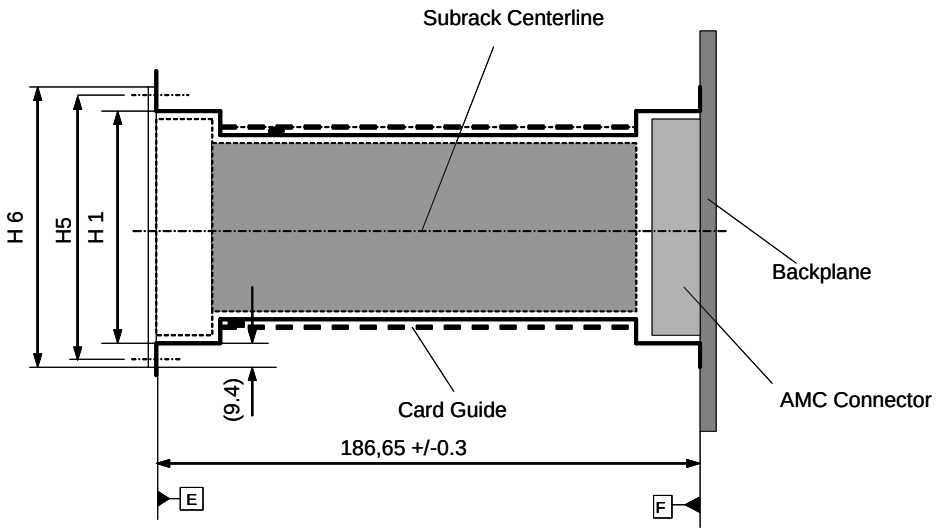

Figure 2-44 Subrack/Module interface w/optional filler panel, dimensions—front view

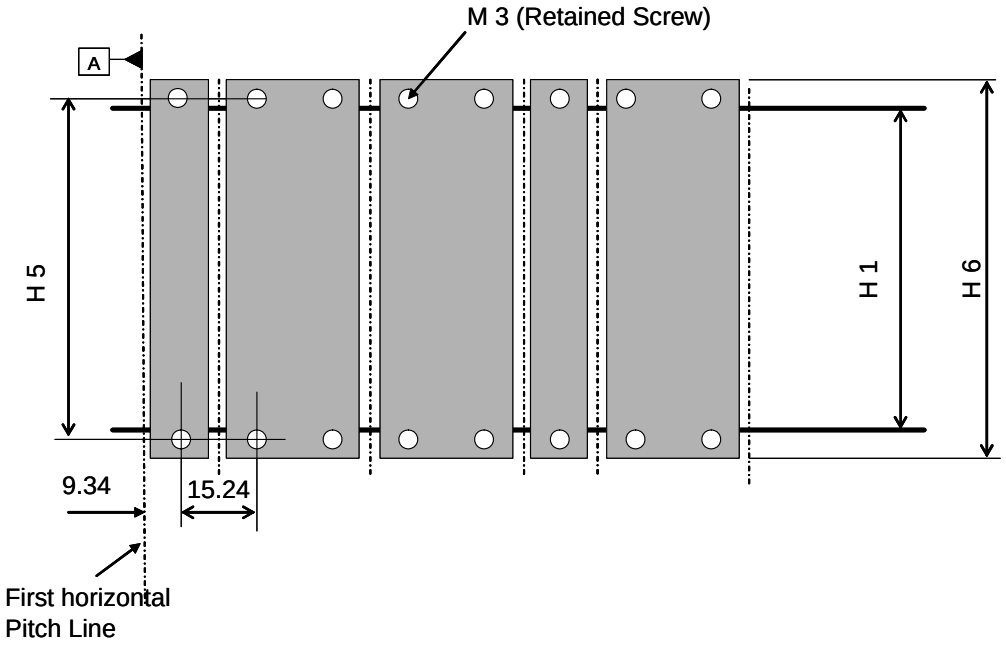

Property of CERN - For Internal Use Only – External Distribution Prohibited

Table 2-8 Optional filler panels dimensions

AdvancedMC Width Module Size	AdvancedMC Height Module Size	H 1	H 5	H 6
Single	Half	76.20	84.00	95.00
	Mid			
	Full			
Double	Half	151.20	159.00	170.00
	Mid			
	Full			

2.5.5 AdvancedMC Module—optional locking

¶ 19 The optional locking feature provides for following additions:

- Locking Modules for transport, shock, and vibration
- Locking Modules for seismic protection
- Locking Modules for safety/security (where tools are required for the unlocking of Modules)
- See Figure 2-45, Figure 2-46, Figure 2-47, and Figure 2-48.

Figure 2-45 Subrack/Module interface w/optional locking, Description 1—side view

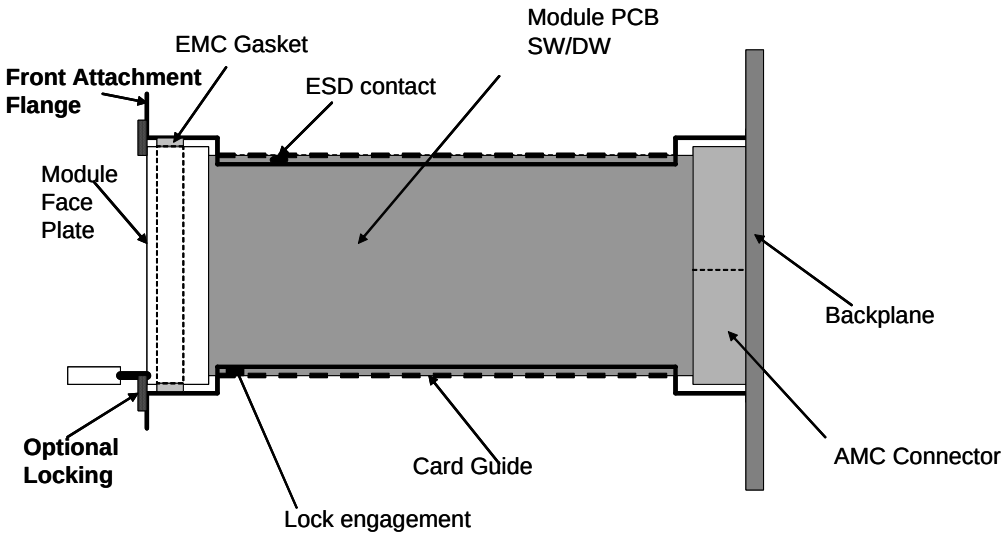

Property of CERN - For Internal Use Only – External Distribution Prohibited

Figure 2-46 Subrack/Module interface w/optional locking, Description 2—side view

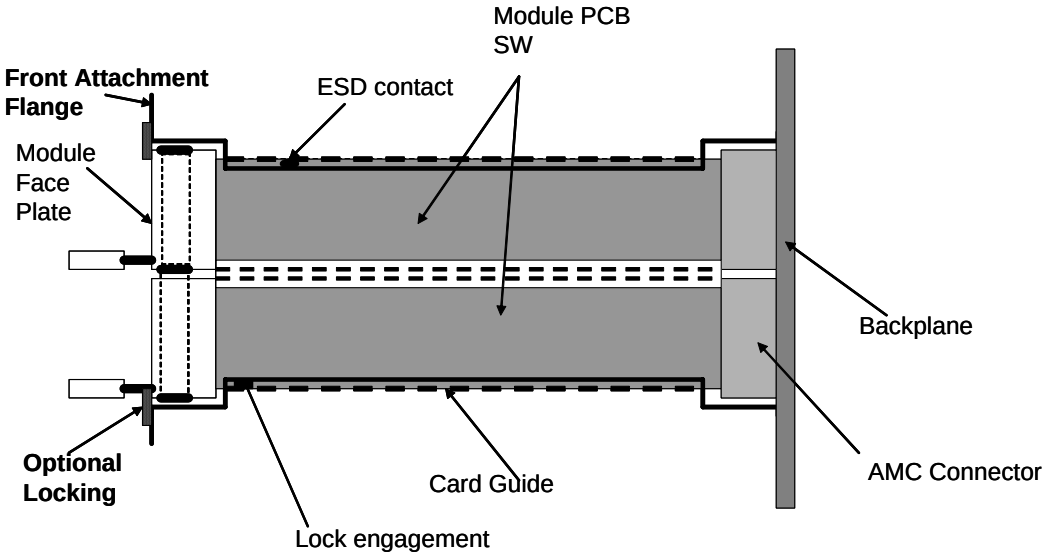

Figure 2-47 Subrack/Module interface w/optional locking, dimensions—side view

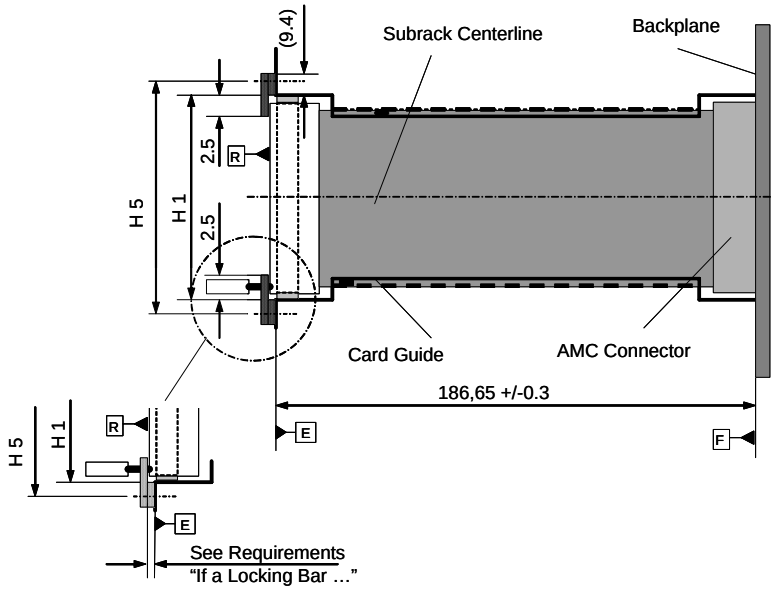

Requirements

REQ 2.43 If a Locking Bar is provided, the Locking Bar **shall** be designed to compensate the maximum/minimum tolerance condition between Datum E and Datum R. To prevent undue pressure onto the Module and Backplane Connector, it is necessary to make use of a flexible attachment to the Locking Bar placed in between the Locking Bar and the Module Face Plate.

Property of CERN - For Internal Use Only – External Distribution Prohibited

Figure 2-48 Subrack/Module interface w/optional locking, dimensions—side view

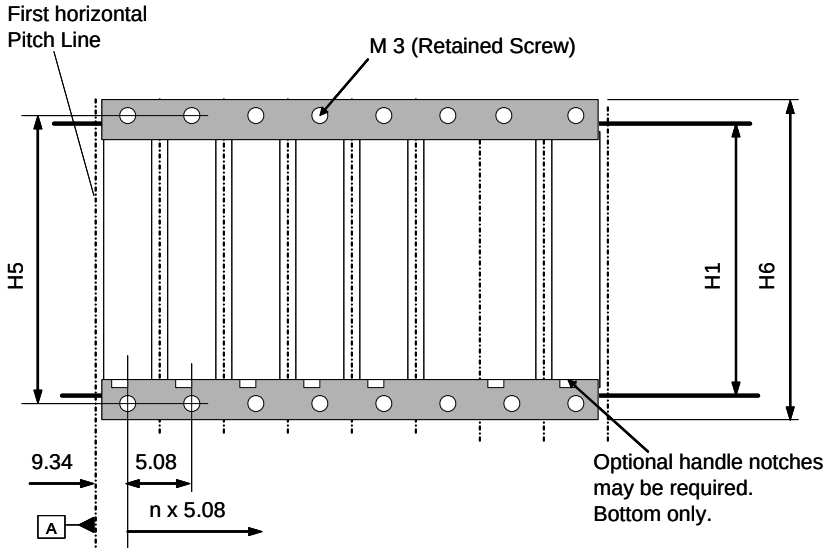

Table 2-9 Optional locking dimensions

AdvancedMC Width Module Size	AdvancedMC Height Module Size	H 1	H 5	H 6
Single	Half	76.20	84.00	95.00
	Mid			
	Full			
Double	Half	151.20	159.00	170.00
	Mid			
	Full			

2.6 Backplane

¶ 20 The number of the Backplane mounting positions is optional.

Requirements

REQ 2.44 MicroTCA Backplanes **shall not** exceed 5.0 mm thickness.

REQ 2.45 The Backplane **should** have mounting holes to attach to the Subrack. See Figure 2-55.

REQ 2.46 The Backplane **shall** withstand the 200 N insertion force of the Connectors in each Slot of the Subrack.

REQ 2.47 At 200N of force, the maximum Backplane deflection **shall not** exceed the ±0.3 mm tolerance budget between the front attachment flange (datum E) and the rear attachment flange (datum F) of the Shelf.

Property of CERN - For Internal Use Only – External Distribution Prohibited

REQ 2.48 Subrack mounting holes **should** be per Figure 2-59 and Figure 2-61

REQ 2.49 Zone 3 mounting area for Auxiliary Connectors **shall** be per Figure 2-54.

Figure 2-49 Example of a Backplane

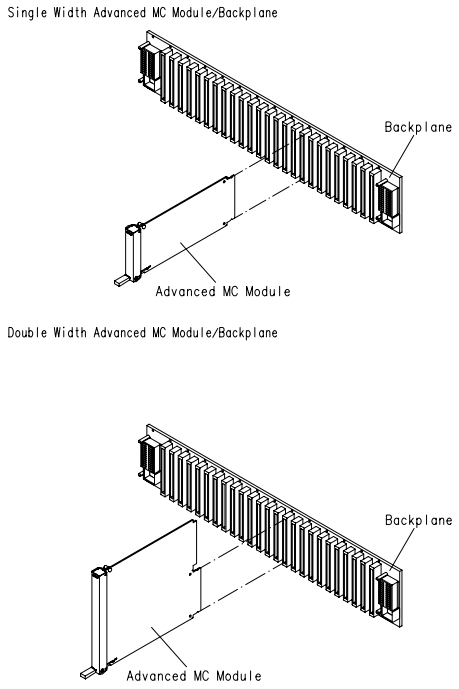

Figure 2-50 Optional Backplane mounting, description

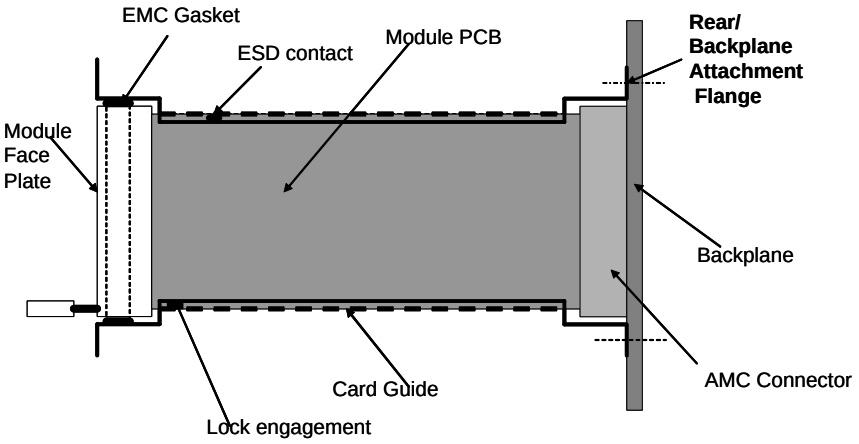

Property of CERN - For Internal Use Only – External Distribution Prohibited

Figure 2-51 Optional Backplane mounting for Single-Width Modules, dimensions

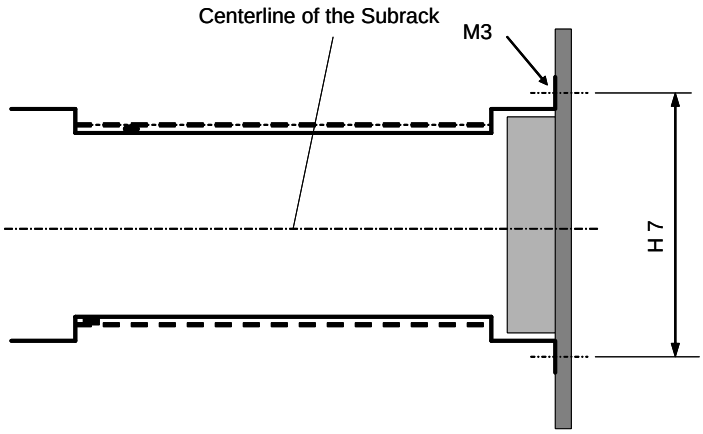

Figure 2-52 Optional Backplane mounting, dimensions for Tier 1 of Double-Width AdvancedMC Modules

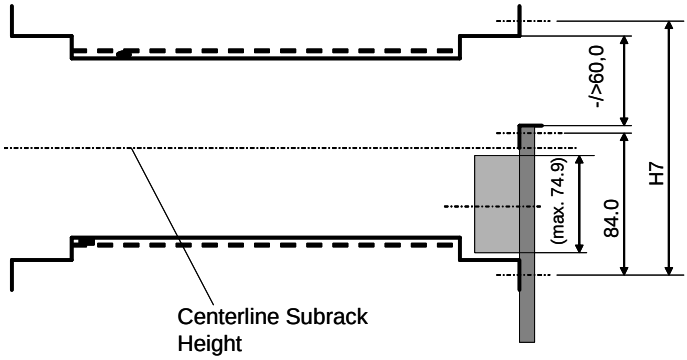

Property of CERN - For Internal Use Only – External Distribution Prohibited

Figure 2-53 Optional Backplane mounting, dimensions for two Tiers of connected Single-Width or mix of Single-/Double-Width AdvancedMC Modules

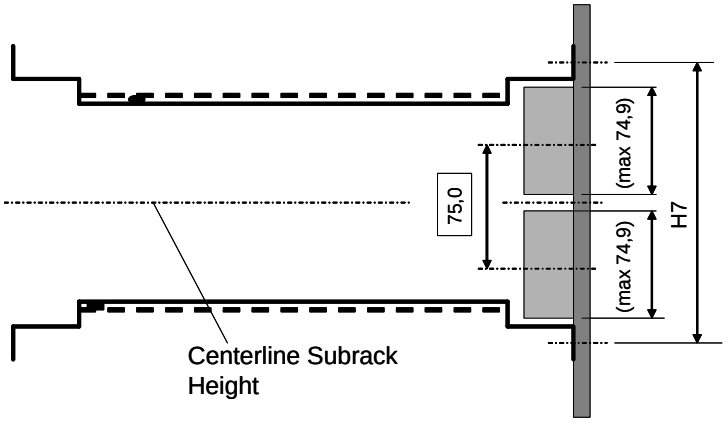

Figure 2-54 Backplane Zone 3 feature—side view

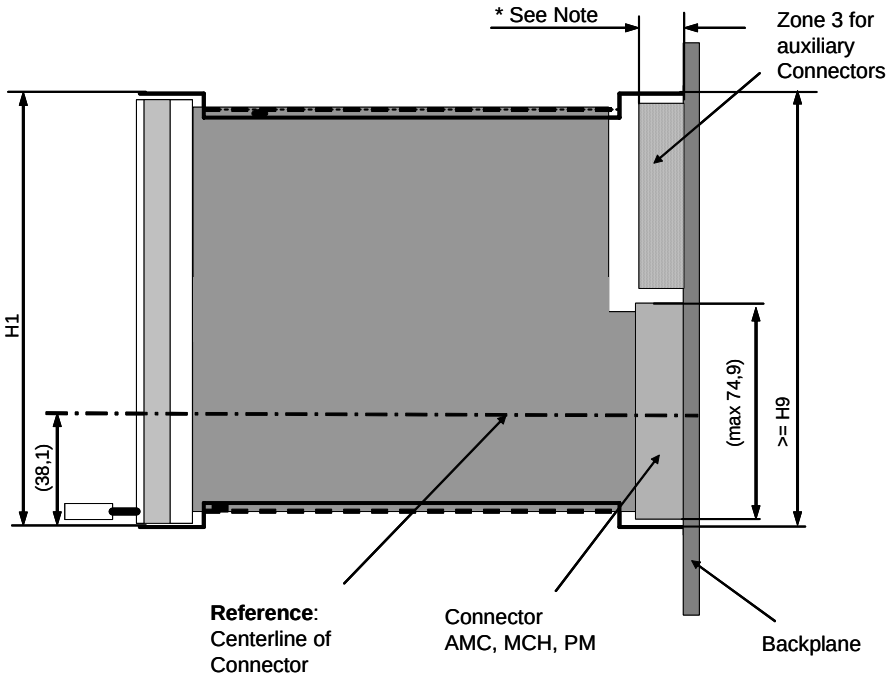

Note: For a description of Zone 3 see Section 2.13, "Auxiliary Connector (Zone 2 and Zone 3) keying"

Property of CERN - For Internal Use Only – External Distribution Prohibited

Figure 2-55 Recommended Backplane mounting positions—rear view

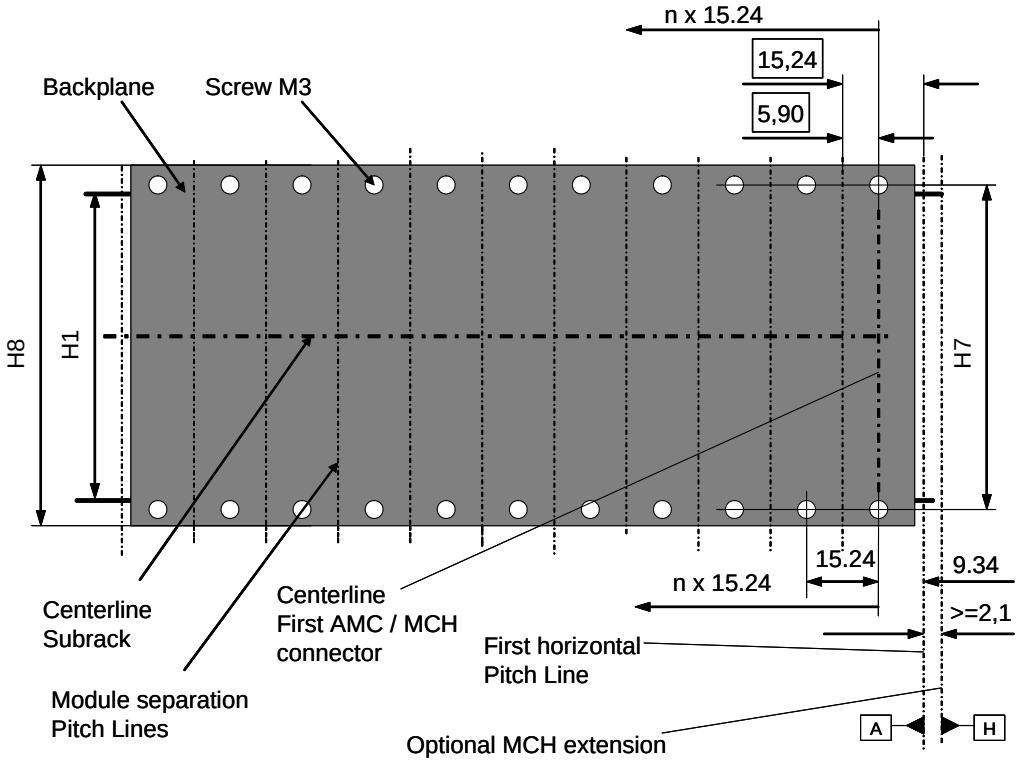

Table 2-10 Backplane mounting dimensions

AdvancedMC Module Width	H7	H8 +0/-1.0
Single	84.00	95.00
Double Tier 1	84.00	95.00
Double Tier 1 and 2 monolithic	159.00	170.00

Property of CERN - For Internal Use Only – External Distribution Prohibited

Figure 2-56 Connector pin location at the backplane—front view

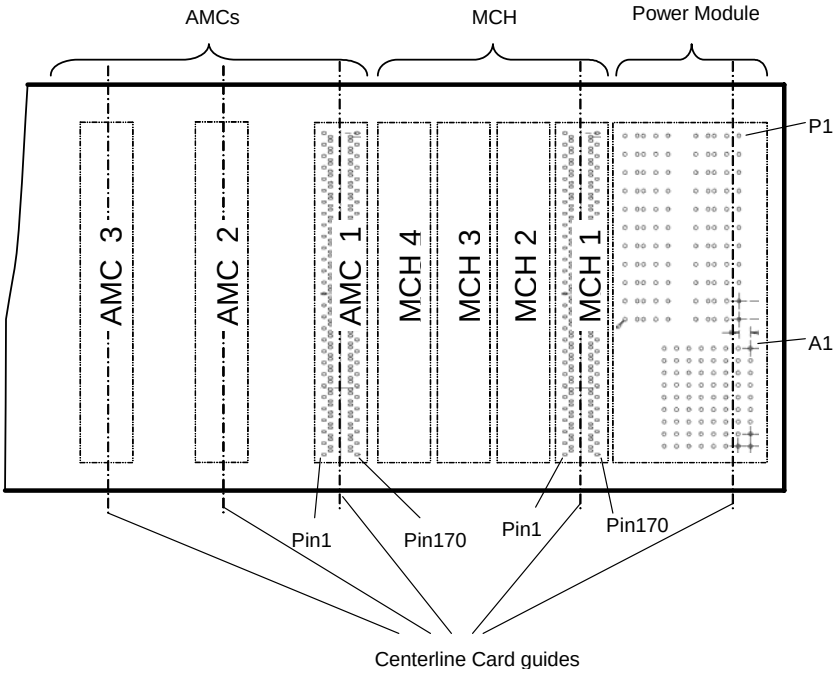

2.7 Subrack dimensions

¶ 21 This section provides detailed dimensions of the Subrack. The Subrack defines only the AMC.0, MCH, or Power Module interfaces and not the Shelf dimensions. This applies also to a Cube and/or Pico solution.

Requirements

REQ 2.50 The Subrack dimensions **shall** be per Section 2.7, “Subrack dimensions”

REQ 2.51 The Shelf is defined by the overall MicroTCA System height, width, and depth in accordance to 19 in. (IEC 60297-x) or Metric (IEC 60917-x) practice. This **may** include the Cooling and Cable Management features.

REQ 2.52 The Cube and/or Pico System **may** use detail thereof or **may** use an application-specific outer form factor.

REQ 2.53 To prevent Modules from shorting to the Subrack side panels, an electrical insulator capable of withstanding 500 V **shall** be added to the inside surface of the right side panel (front view).

Note: The following drawings identify dimensional lines only and do not indicate methods of product design or production.

Property of CERN - For Internal Use Only – External Distribution Prohibited

2.7.1 Mandatory Subrack

Figure 2-57 Mandatory Subrack for Full-Height, Full-Width AMC.0 Modules—front view

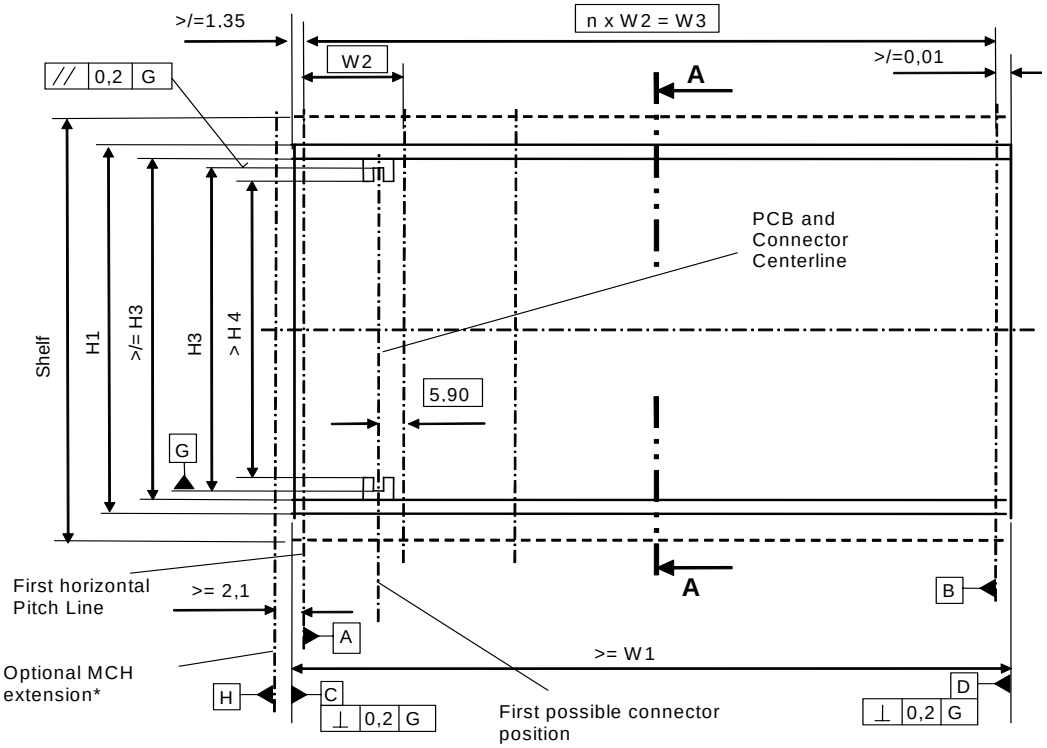

Note: * For optional MCH extension, see Figure 2-98, "Positioning MCH four tongue Module, special feature—top view".

Figure 2-58 Mandatory Subrack—side view, cross section A-A

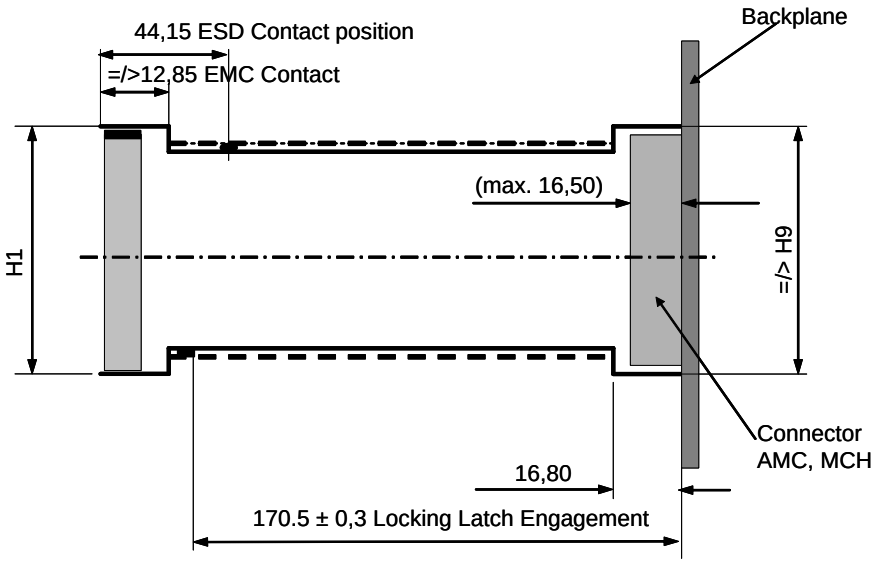

Property of CERN - For Internal Use Only – External Distribution Prohibited

Figure 2-59 Mandatory Subrack w/optional attachment—side view

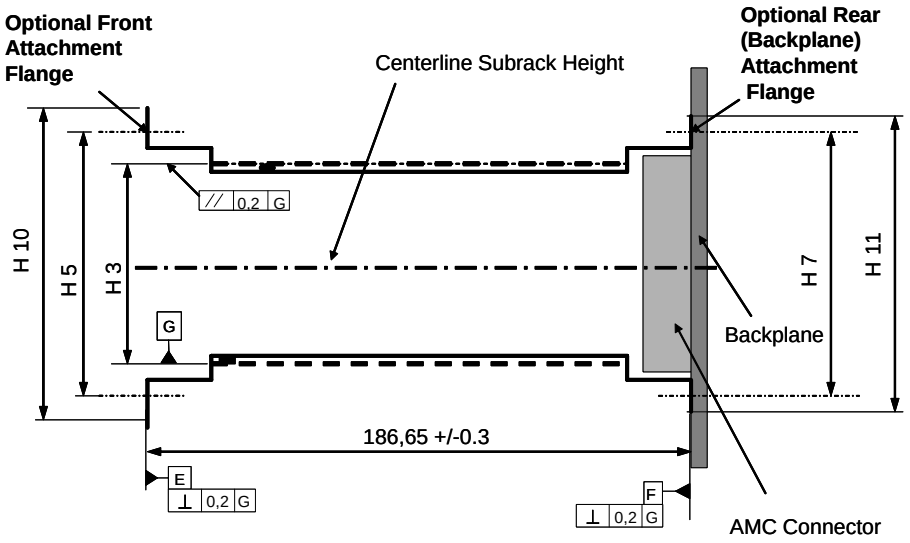

Figure 2-60 Mandatory Subrack w/optional attachment—front view

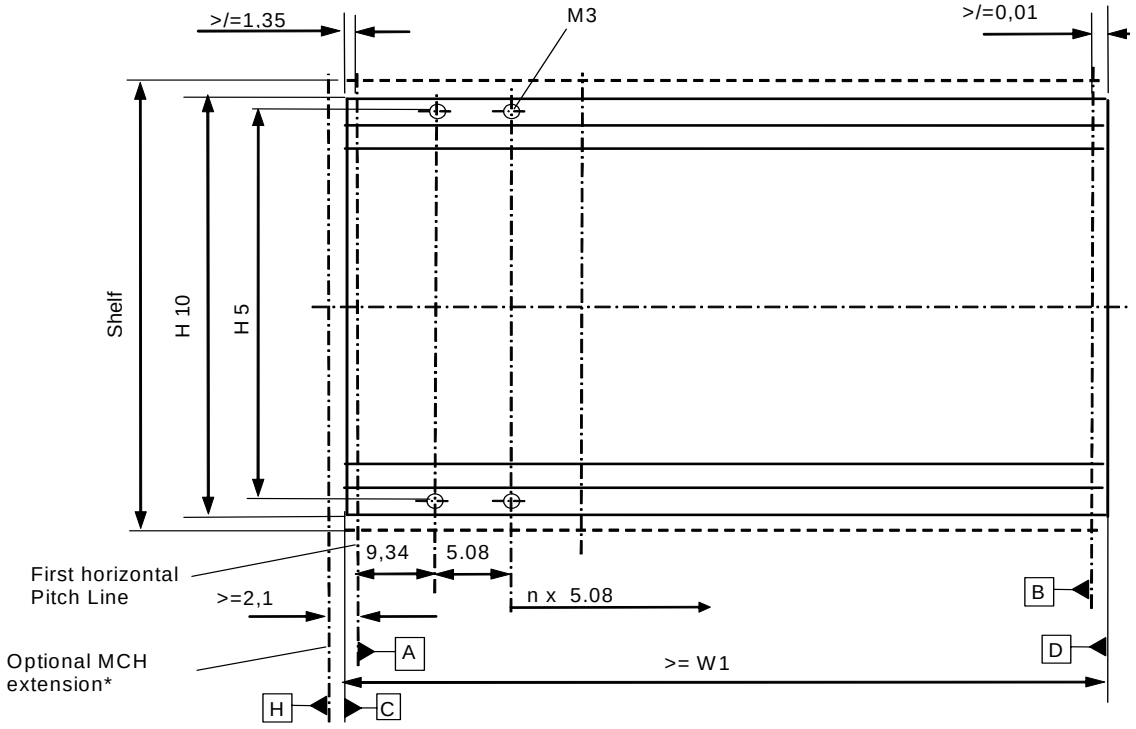

Note: The number of the M3 mounting positions is optional.
* For optional MCH extension, see Figure 2-98.

Property of CERN - For Internal Use Only – External Distribution Prohibited

Figure 2-61 Mandatory Subrack w/optional attachment—rear view

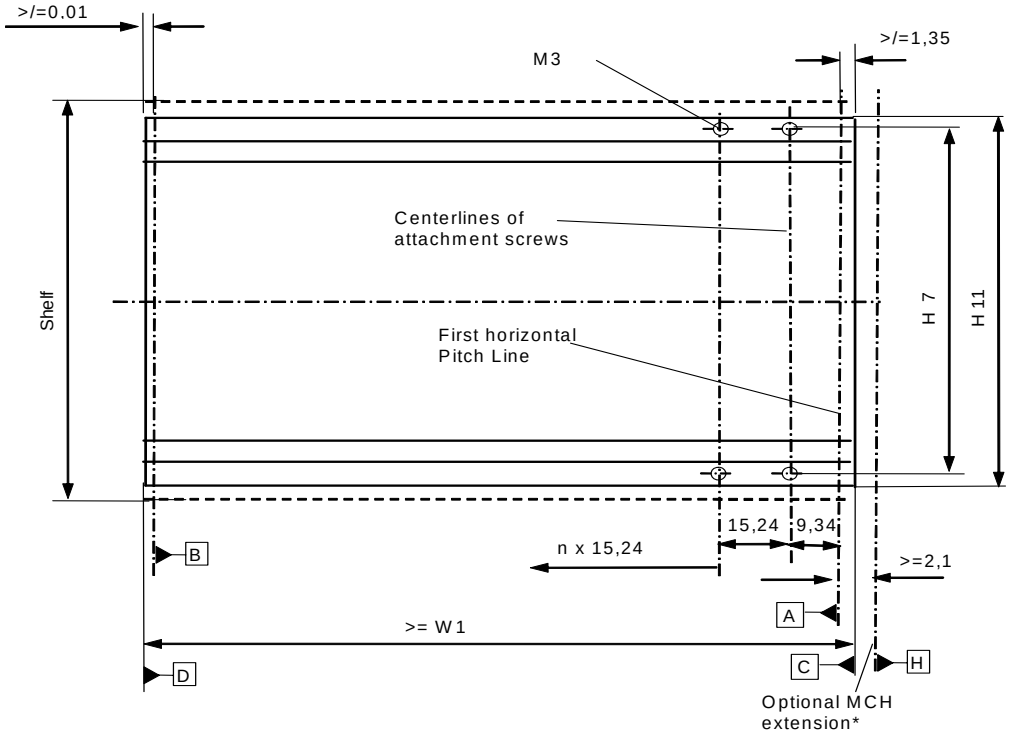

Note: * For optional MCH extension, see Figure 2-98

Figure 2-62 Mandatory Subrack w/optional attachment, one-Tier Backplane mounting in Double-Width Subrack—side view

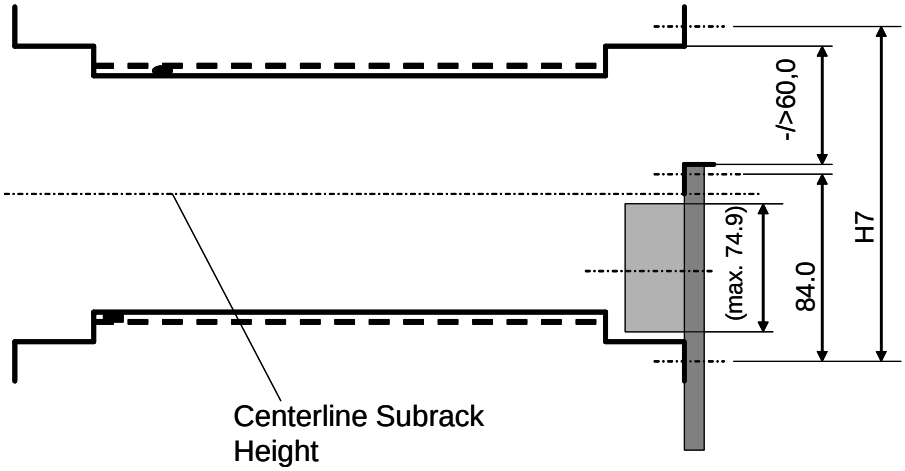

Property of CERN - For Internal Use Only – External Distribution Prohibited

Figure 2-63 Mandatory Subrack w/optional attachment, two-Tier Backplane mounting in Double-Wide Subrack—side view

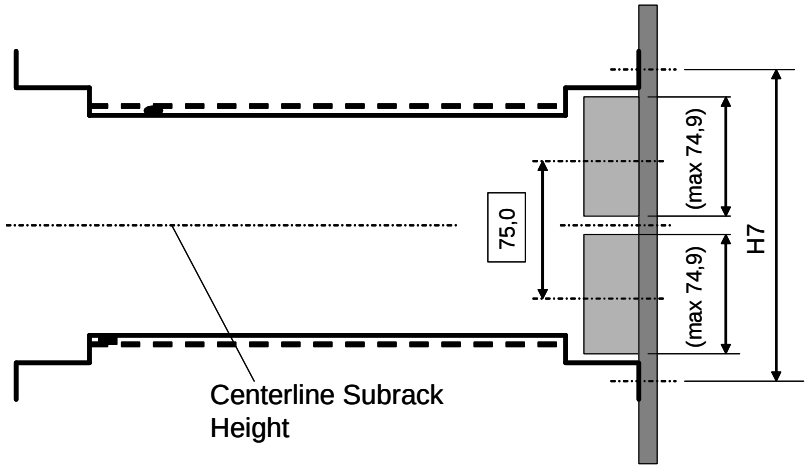

Table 2-11 Subrack height dimensions

AdvancedMC Module Width	H 1	H 3	H 4	H 5	H 7	H 9	H 10	H 11
Single Width	76.2	74.0	70.7	84.0	84.0	75.0	95.0	95.0
Double Width	151.2	149.0	145.7	159.0	159.0	150.0	170.0	170.0

Note: The Subrack height reflects the AMC.0 Module width.

Table 2-12 Subrack width dimensions (19 in. and metric)

Subrack Type	AdvancedMC Width Module Size	AdvancedMC Height Module Size	W1	n	W2	W3
IEC 60297 (19 inch) (1U=44.45mm) (W5=465.1mm)	Single	Half	428.08	28	15.24	426.72
			443.32	29	15.24	441.96
		Mid	428.08	21	20.32	426.72
		Full	428.08	14	30.48	426.72
		Half, Mid and Full mixed in any combination	depends on AMC.0 Module Heights			max. 441.96

Property of CERN - For Internal Use Only – External Distribution Prohibited

Table 2-12 Subrack width dimensions (19 in. and metric) (continued)

Subrack Type	AdvancedMC Width Module Size	AdvancedMC Height Module Size	W1	n	W2	W3
IEC 60297 (19 inch) (1U=44.45mm) (W5=465.1mm)	Double	Half	428.08	28	15.24	426.72
			443.32	29	15.24	441.96
		Mid	428.08	21	20.32	426.72
		Full	428.08	14	30.48	426.72
		Half, Mid and Full mixed in any combination	depends on AMC.0 Module Heights			max. 441.96
IEC 60917 (metric) ETSI (1SU=25.0mm) (W5=515.0mm)	Single	Half	489.04	32	15.24	487.68
		Mid	489.04	24	20.32	487.68
		Full	489.04	16	30.48	487.68
		Half, Mid and Full mixed in any combination	depends on AMC.0 Module Heights			max. 487.68
	Double	Half	489.04	32	15.24	487.68
		Mid	489.04	24	20.32	487.68
		Full	489.04	16	30.48	487.68
		Half, Mid and Full mixed in any combination	depends on AMC.0 Module Heights			487.68

Property of CERN - For Internal Use Only – External Distribution Prohibited

Table 2-12 Subrack width dimensions (19 in. and metric) (continued)

Subrack Type	AdvancedMC Width Module Size	AdvancedMC Height Module Size	W1	n	W2	W3
IEC 60917 (metric) ETSI (1SU=25.0mm) (W5=465.1mm)	Single	Half	428.08	28	15.24	426.72
			443.32	29	15.24	441.96
		Mid	428.08	21	20.32	426.72
		Full	428.08	14	30.48	426.72
		Half, Mid and Full mixed in any combination	depends on AMC.0 Module Heights			max. 441.96
	Double	Half	428.08	28	15.24	426.72
			443.32	29	15.24	441.96
		Mid	428.08	21	20.32	426.72
		Full	428.08	14	30.48	426.72
		Half, Mid and Full mixed in any combination	depends on AMC.0 Module Heights			max. 441.96

2.8 Shelf

Requirements

REQ 2.54 The Shelf **shall** be rack-mountable.

REQ 2.55 The Shelf **shall** define the outer dimensions of the MicroTCA system.

REQ 2.56 The Shelf **shall** define the interface dimensions to the rack.

REQ 2.57 The Shelf **shall** contain a MicroTCA Subrack (in whole or in part) as defined in this document and **may** contain cooling devices, air filters, power conditioning components, and cable management.

Property of CERN - For Internal Use Only – External Distribution Prohibited

Figure 2-64 Example of a Shelf

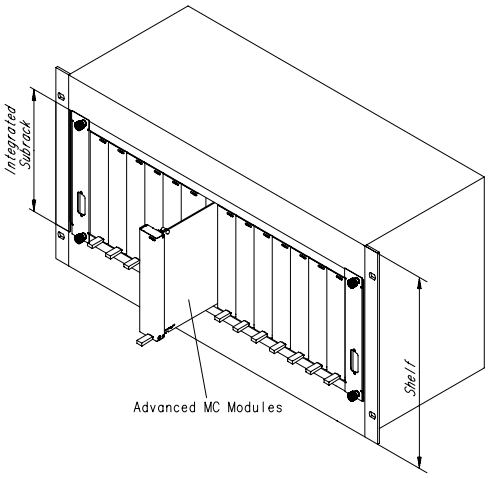

2.8.1 Shelf types

¶ 22 There are basically two types of Shelves:

- The 19 in. Shelf, as defined in IEC 60297
- The Metric Shelf, as defined in IEC 60917 and ETS 300 119-4

Requirement

REQ 2.58 The chosen Shelf type **shall** be in compliance with either standard.

Property of CERN - For Internal Use Only – External Distribution Prohibited

2.8.2 Shelf width and height

Figure 2-65 Shelf dimensions—top view

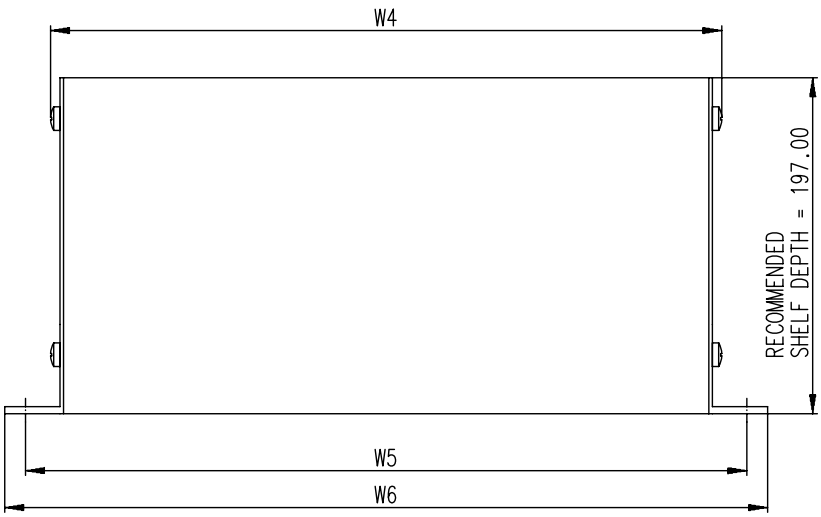

Table 2-13 Shelf dimension

	W6 Shelf Width	W4 Shelf Body Width	Frame Width Aperture	W5 Frame Mounting Points	Height	Other Standards
IEC 60297 19 in.	482.60	<= 449.0	>= 450	465.10	U= 44.45mm n x U	EIA310-D Section 1
						ANSI T1.336
IEC 60917 Metric (ETSI)	535.00	<=499.0	>= 500	515.00	SU= 25.0mm n x SU	EIA310-D Section 1
						ANSI T1.336
						ETS 300 119-4
IEC 60917 Metric (ETSI)	482.60	<=449.0	>= 450	465.10	SU= 25.0mm n x SU	To be fitted into miscelLa-neous racks according to ETS 300 119-3 by the use of adaptors

2.8.3 Shelf depth

Requirement

REQ 2.59 The Shelf Depth **shall** be per Figure 2-65.

Property of CERN - For Internal Use Only – External Distribution Prohibited

2.8.4 Air filter provision

Requirement

REQ 2.60 AMC.0 Modules require filtered air. Filtering **may** be a part of the Shelf or of the larger installation. Air filter requirements are described in Section 5, “Thermal”.

2.8.5 ESD wrist strap interface

Requirements

REQ 2.61 Each Shelf, Cube, and Pico **shall** provide a wrist strap terminal on the front of the Shelf.

REQ 2.62 Wrist straps terminals **shall** be unpainted terminals connected to Shelf Ground and **shall** be marked to indicate ESD function.

REQ 2.63 The markings **should** include a Shelf Ground symbol as shown in Figure 2-66.

Figure 2-66 Wrist strap terminal with Shelf Ground marking

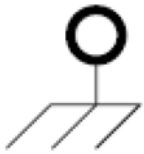

REQ 2.64 A banana plug/jack assembly **shall** be used for ESD wrist strap connections.

REQ 2.65 To safely discharge an operator wearing a wrist strap plugged into the wrist strap interface, banana jacks **shall** provide the following characteristics when the plug of the wrist strap is inserted into the jack of the Shelf:

REQ 2.66 The banana plug and jack interface **shall** provide a maximum contact resistance of 0.1ohm and **shall** connected to the central ground feature of the shelf.

REQ 2.67 The banana plug and jack interface **shall** have a minimum current capacity rating of 15A.

REQ 2.68 The banana plug and jack **shall** be capable of sustaining the minimum current carrying capacity at 50 °C.

Note: The 4 mm jack can typically connect with a 0.166 in. diameter plug.

Property of CERN - For Internal Use Only – External Distribution Prohibited

Table 2-14 4 mm plug/jack

Physical Dimension	Banana Jack (Receptacle)	Banana Plug
Outer diameter - jack	N/A	N/A
Inner diameter - jack	3.99 mm ±0.51 mm	N/A
Min. shaft Depth - jack	17.02 mm	N/A
Tip diameter - plug	N/A	4.5 mm max.
Spring diameter - plug	N/A	4.65 mm ±0.51 mm
Max. spring length - plug	N/A	16.51 mm ±0.51 mm
Sample component	Pomona 5933 insulated 4 mm banana jack	Pomona 5934 do-it-yourself in-line 4 mm banana plug

2.8.6 Shelf alarm LEDs

¶ 23 If a telco alarm interface is implemented, there should be LEDs provided that correspond to the output values.

Table 2-15 Shelf alarm LEDs

Alarm	Color	Meaning if Lit
Critical	RED	A critical error has occurred.
Major	RED	A major error has occurred.
Minor	AMBER	A minor error has occurred.
Power Present	GREEN	Power is on (unlit indicates power failure).

Requirements

REQ 2.69 Vendors **may** choose to use multi-color components for the Shelf alarm LEDs to meet specific regional or customer requirements for each condition.

REQ 2.70 The Shelf alarm LEDs **should** be visible from the front of the Shelf and **should** be vertically aligned.

REQ 2.71 These LEDs **may** be placed anywhere on the Shelf and **should** be placed within 25.4 mm of each other in a cluster.

REQ 2.72 The LEDs **should** be placed so that they have a minimum viewing angle of 120°, and they should be visible 8 m from the front of the Shelf.

REQ 2.73 Each LED **shall** be illuminated when the corresponding relay is energized as defined above.

REQ 2.74 Legends **may** be provided with the LEDs.

REQ 2.75 The system implementer **shall** select these legends.

REQ 2.76 If provided, lettering **shall** be located within 6.35 mm of the LED and **should** be 9 pt. regular Arial font.

REQ 2.77 LED test **may** be performed on the Shelf Alarm LEDs.

Property of CERN - For Internal Use Only – External Distribution Prohibited

2.9 Cable management

Requirements

REQ 2.78 Cable management **shall** be determined at the Frame, Shelf, and Module level. Within each of these three areas, there are three types of cable management to be considered: power cable management, I/O copper cable management, and I/O optical fiber cable management.

REQ 2.79 Cables **shall** exit each Module in either upwards or downwards direction until outside the Subrack while maintaining the minimum cable bend radius and remaining behind the cover/door of the cabinet.

REQ 2.80 Cable management and cables attached to other Module Slots **shall not** interfere with the insertion and extraction of any given Module.

REQ 2.81 Cable management **shall** provide fiber bend radius control.

REQ 2.82 Cable management **should** permit up to 200 RJ-45 / CAT5E cables per shelf (16 per AMC position).

REQ 2.83 Cable management **should** support eye safety considerations by permitting fibers to exit AMCs and MCHs at a downward pointing angle.

Property of CERN - For Internal Use Only – External Distribution Prohibited

Figure 2-67 Cable management space in a Frame, 300 mm depth, flush-mounted

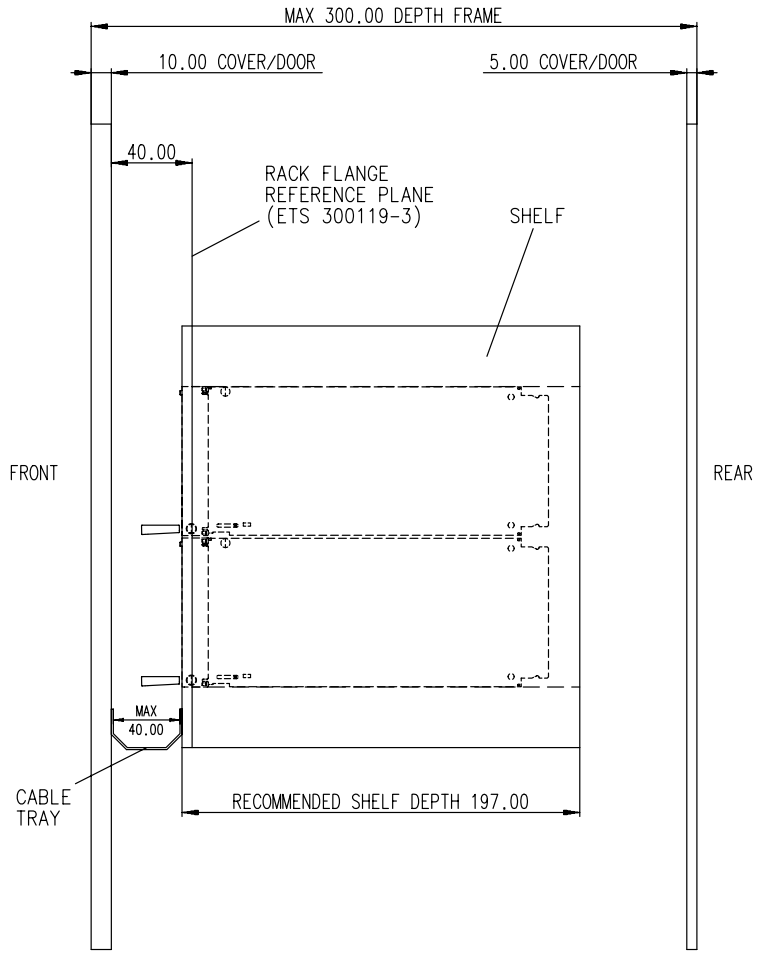

Property of CERN - For Internal Use Only – External Distribution Prohibited

Figure 2-68 Cable management space in a Frame, 300 mm depth, recess-mounted

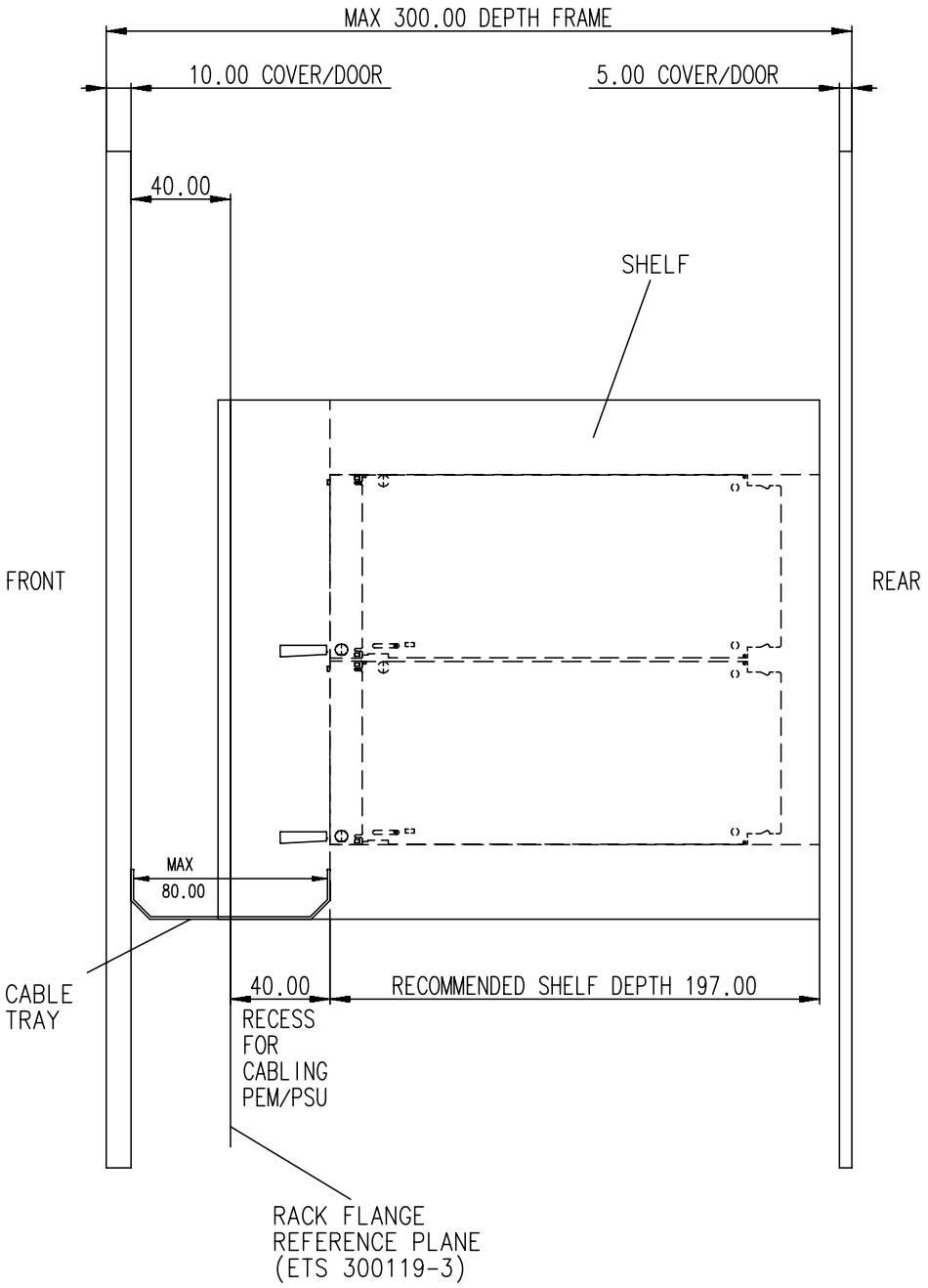

Property of CERN - For Internal Use Only – External Distribution Prohibited

Figure 2-69 Cable management space in a Frame, 600 mm depth

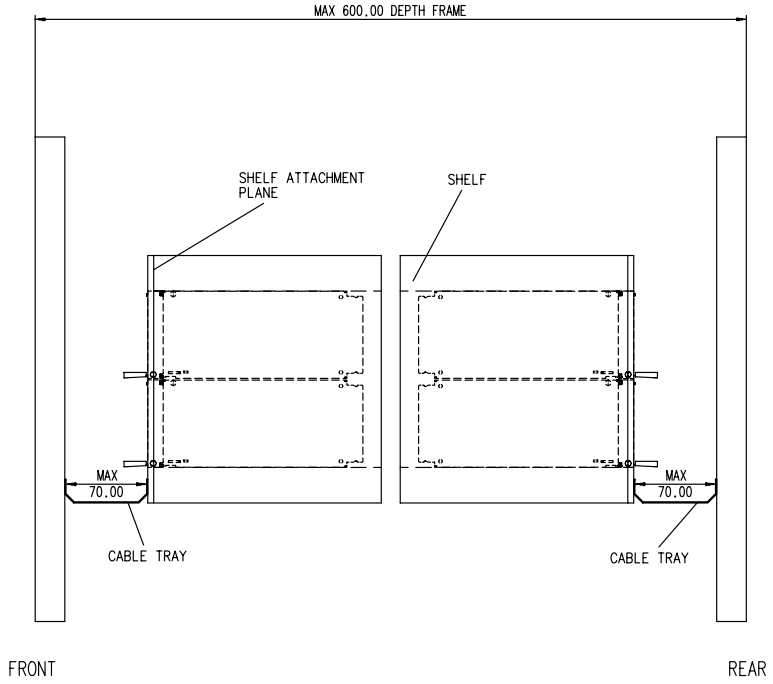

Figure 2-70 Example cable routing—front view

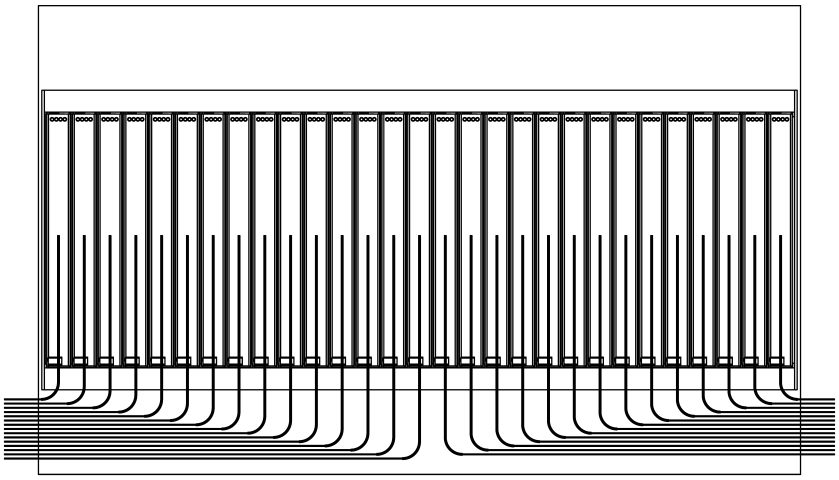

Property of CERN - For Internal Use Only – External Distribution Prohibited

2.10 Power entry/Power Module

¶ 24 This section describes the mechanical features of the full-height Power Module which allow it to interface with the MicroTCA Subrack. Power supply units that do not fit into the Subrack are permitted, but the mechanical features are not described by this specification. Power Module form factors other than full-height are also permitted, but are beyond the scope of the specification, see Section 4.7.2.

¶ 25 The power entry into a MicroTCA Shelf is subject to various end user requirements. The positions of a Power Module in a Subrack are defined by the locations of the Power Module-specific output Connector on the Backplane. Input and output Connectors to the Power Module are defined in Section 7. Other characteristics of the Power Module, such as electrical, management, thermal, and regulatory requirements are described in Section 4.

¶ 26 The Power Module requires a positive retention method to hold it into the subrack during seismic and vibration tests. This can be achieved using the module latch mechanism described in AMC.0 Section 2.2.8, locking bars (shown in Section 2.5.5), or retention screws. The latter two options require the use of the optional subrack configuration shown in Figure 2-43.

Requirements

REQ 2.84 Power entry into a MicroTCA Shelf, Cube, or Pico **may** be accomplished via:

- DC or AC power source
- Separate power source
- Integrated power source
- Power Module which fits into a specific Power Module slot in a MicroTCA Subrack.

REQ 2.85 Power Modules **shall** occupy an integral number of Half-Height Slots.

REQ 2.86 Power Modules **shall** provide a minimum of 1.5 mm Creepage distance between all elements of the Shelf Ground domain and the Logic Ground based circuitry.

REQ 2.87 Power Module vendors **shall** specify the mass (g) of their Module in the product documentation.

REQ 2.88 The weight of a Power Module **shall not** exceed 1000 g.

REQ 2.89 Power Modules **shall** adhere to the cooling requirements of Section 5.

REQ 2.90 Power Modules **should** be located in the outermost Slots of a Shelf.

Property of CERN - For Internal Use Only – External Distribution Prohibited

Figure 2-71 Power Module example

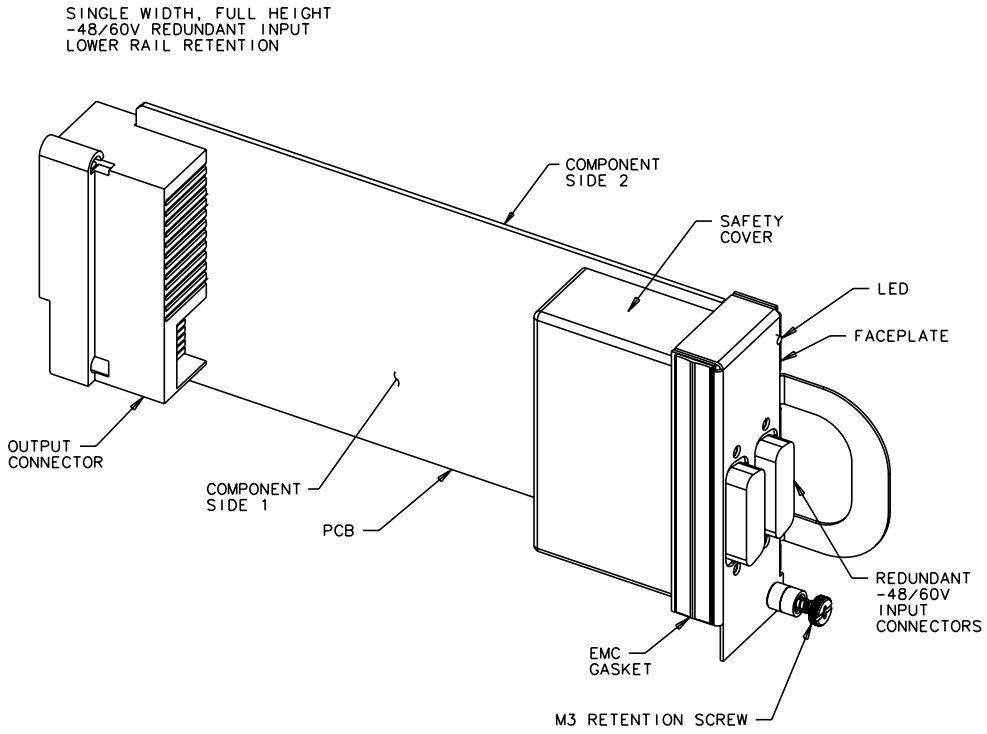

Figure 2-72 Nominal positioning of Power Modules in Subrack

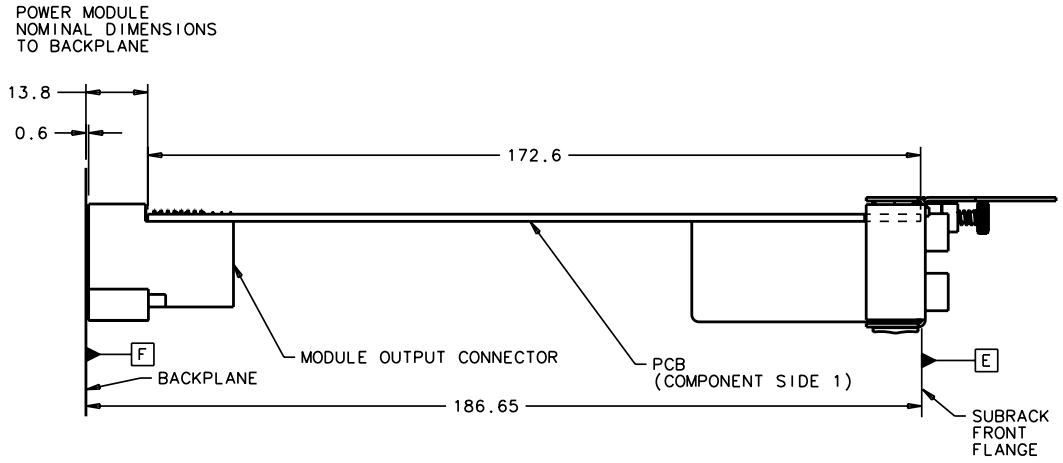

Property of CERN - For Internal Use Only – External Distribution Prohibited

2.10.1 Power Module PCB dimensions

¶ 27 The PCB dimensions are shown in Figure 2-73 through Figure 2-77. These dimensions specify overall PCB dimensions, the location of the ESD discharge strip, and keep-out areas for card guides and connectors. The keep-out areas differ for Component Side 1 and Component Side 2 of the PCB. Refer to Section 7 for details of connector footprint/ attachment to the PCB. Attachment of the input connector to the PCB is application specific.

Requirements

REQ 2.91 Power Module PCB thickness **shall** be 1.6 ±0.16 mm.

REQ 2.92 Single Width Power Module PCBs **shall** adhere to the dimensional requirements in Figure 2-73 through Figure 2-74.

REQ 2.93 Double Width Power Module PCBs **shall** adhere to the dimensional requirements in Figure 2-75 through Figure 2-77.

REQ 2.94 Keep-out zones **shall** exclude all components, test points, and features that can create a mechanical impediment to insertion or extraction of the Power Module.

REQ 2.95 Card Guide and Strut keep-out zones **shall** exclude components, traces, test points, vias, and features that can create a conductive path to the Subrack, including traces protected by solder mask.

REQ 2.96 Regarding PCB warpage: Using IPC-TM-650, Test Method 2.4.22 as a guideline, the combination of bow and twist **shall** be a maximum of 0.4 mm. The warpage limitations **shall** apply during the insertion process and also under conditions of the specified environment (e.g., vibration).

REQ 2.97 ESD strip Segment 3 **shall** have a conductive path to the faceplate.

REQ 2.98 ESD strip plating **shall** be 1.0 µm minimum thickness electroless gold; any thickness electroplated gold over nickel; or tin plating.

REQ 2.99 Module ESD strip 8 kV/15 kV performance **should** comply with Telcordia GR-78 Checklist Item R9-2.

REQ 2.100 Power Module vendors **shall** identify in their product documentation whether the Module has been tested to GR-78 R9-2.

Property of CERN - For Internal Use Only – External Distribution Prohibited

Figure 2-73 Power Module, Single-Width, PCB dimensions

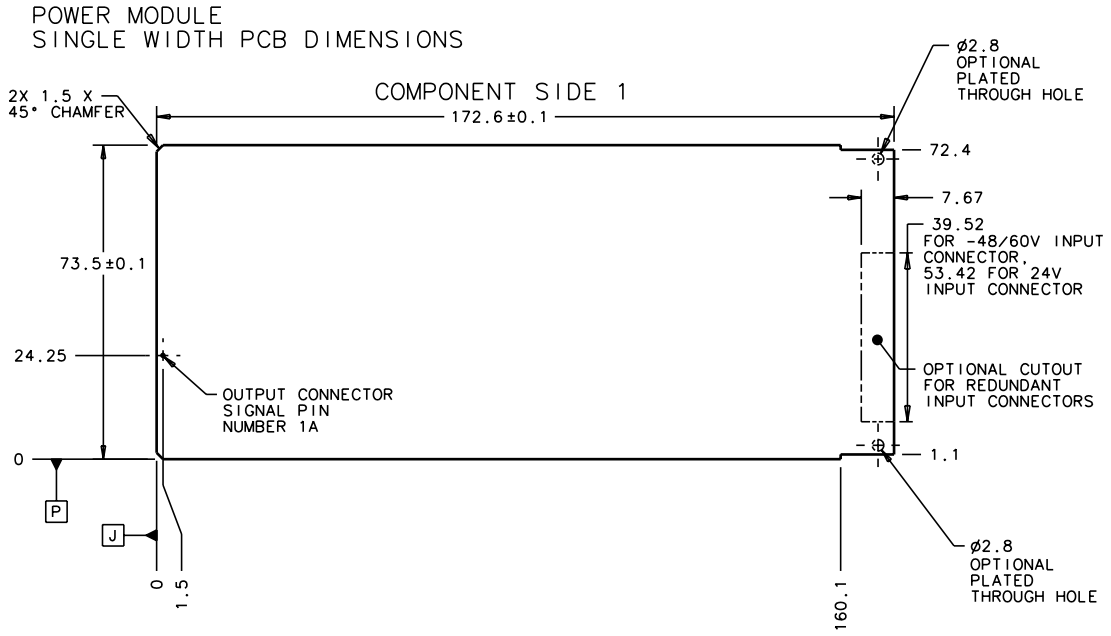

Property of CERN - For Internal Use Only – External Distribution Prohibited

Figure 2-74 Power Module, Single-Width, PCB keep-out zone

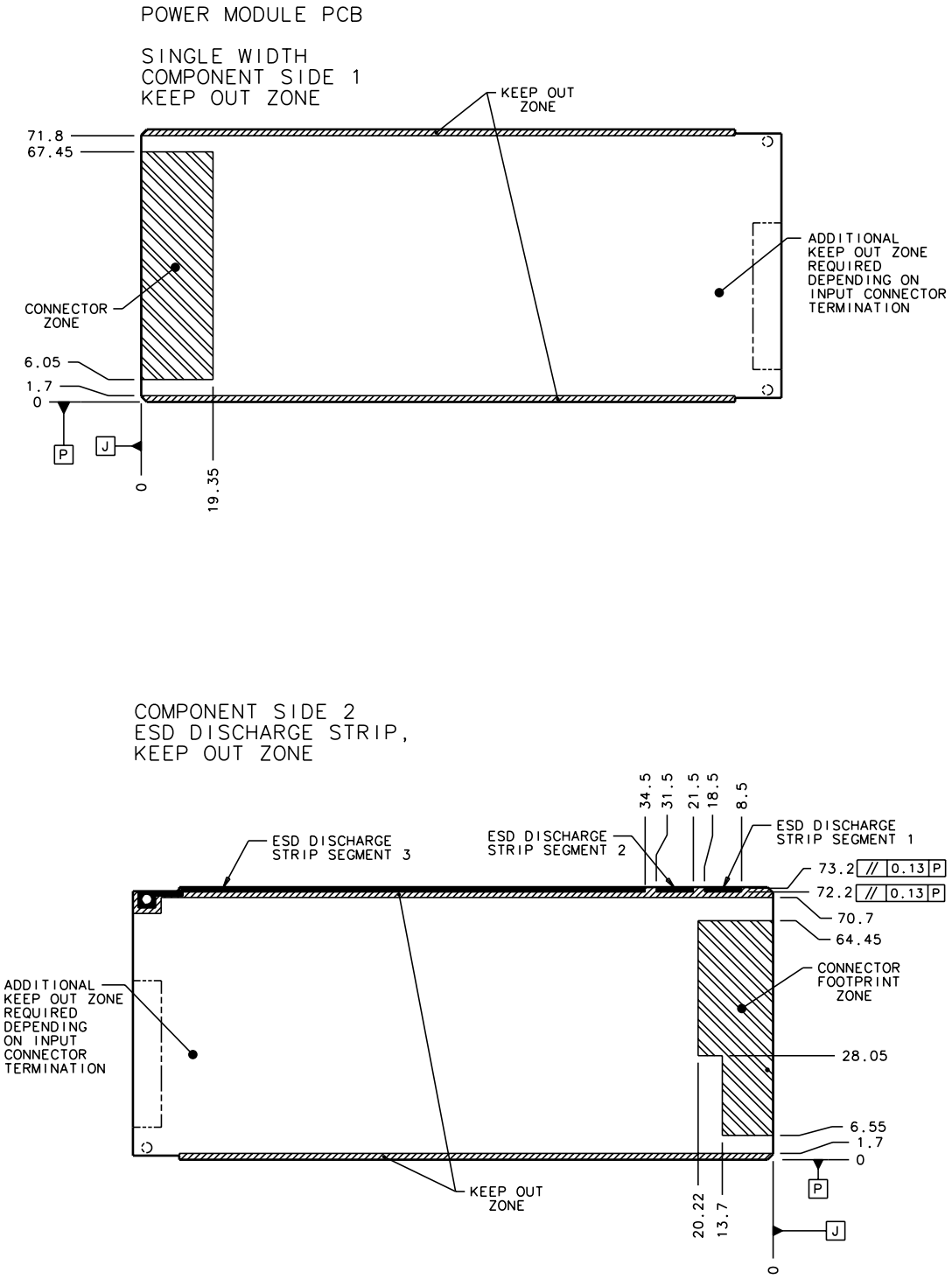

Property of CERN - For Internal Use Only – External Distribution Prohibited

Figure 2-75 Power Module, Double-Width, PCB dimensions

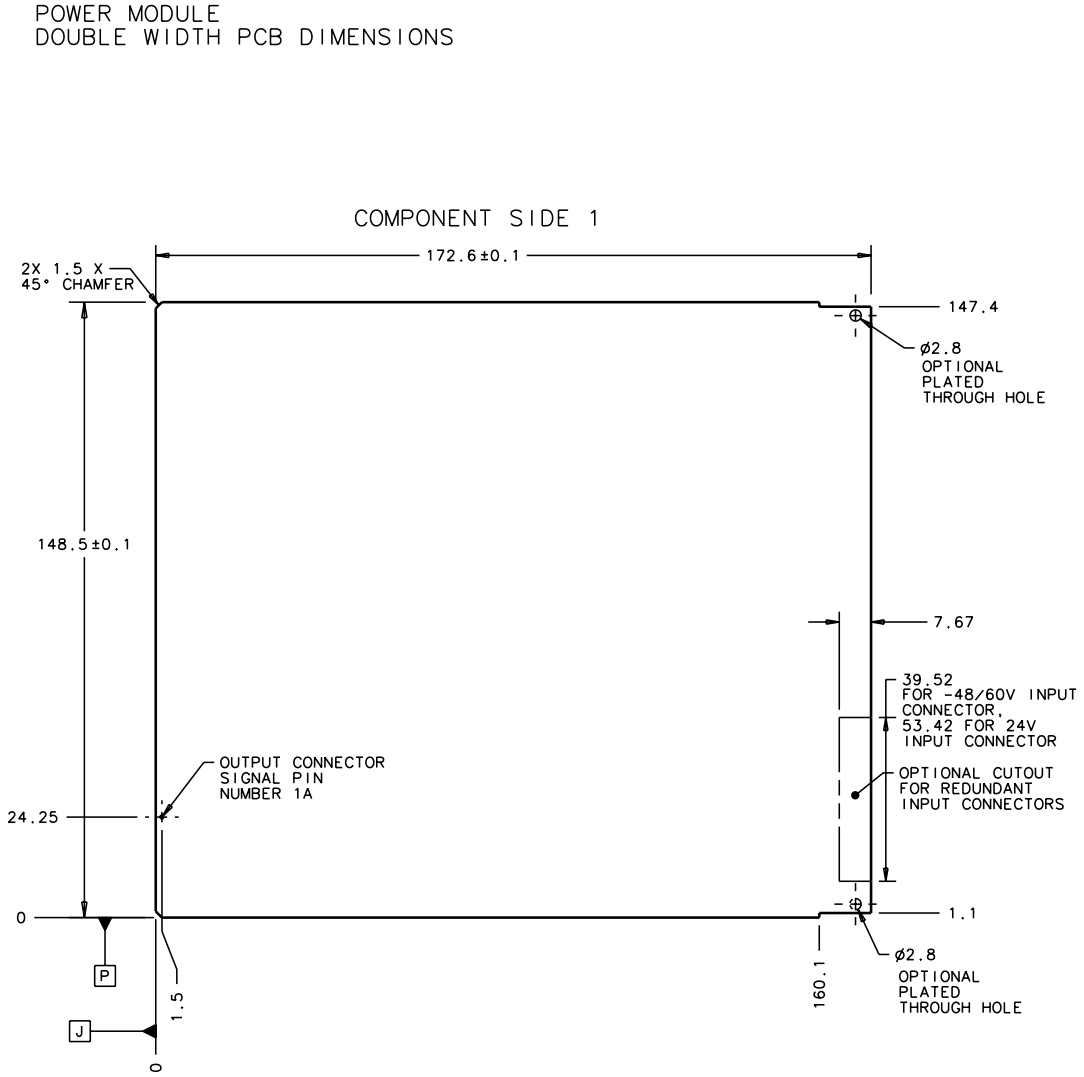

Property of CERN - For Internal Use Only – External Distribution Prohibited

Figure 2-76 Power Module, Double-Width, keep-out zone, Side 1

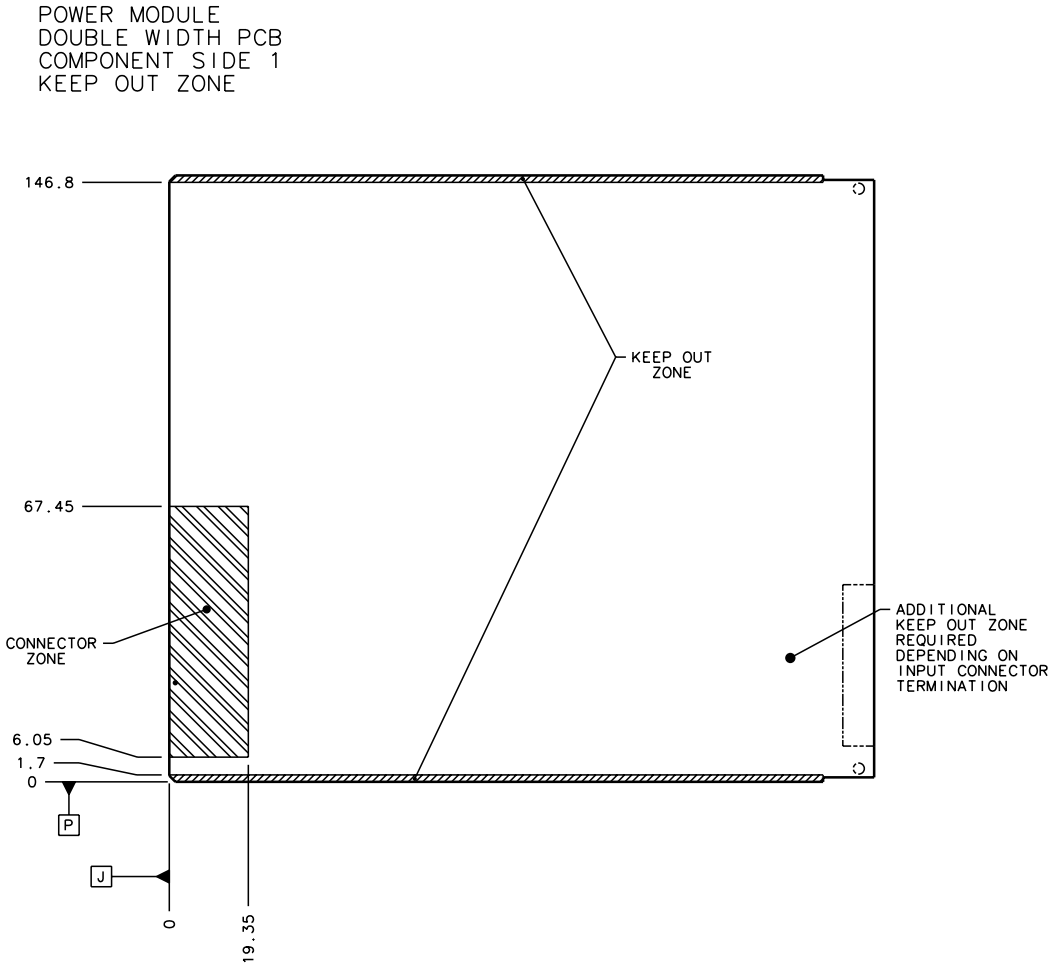

Property of CERN - For Internal Use Only – External Distribution Prohibited

Figure 2-77 Power Module, Double-Width, keep-out zone, Side 2

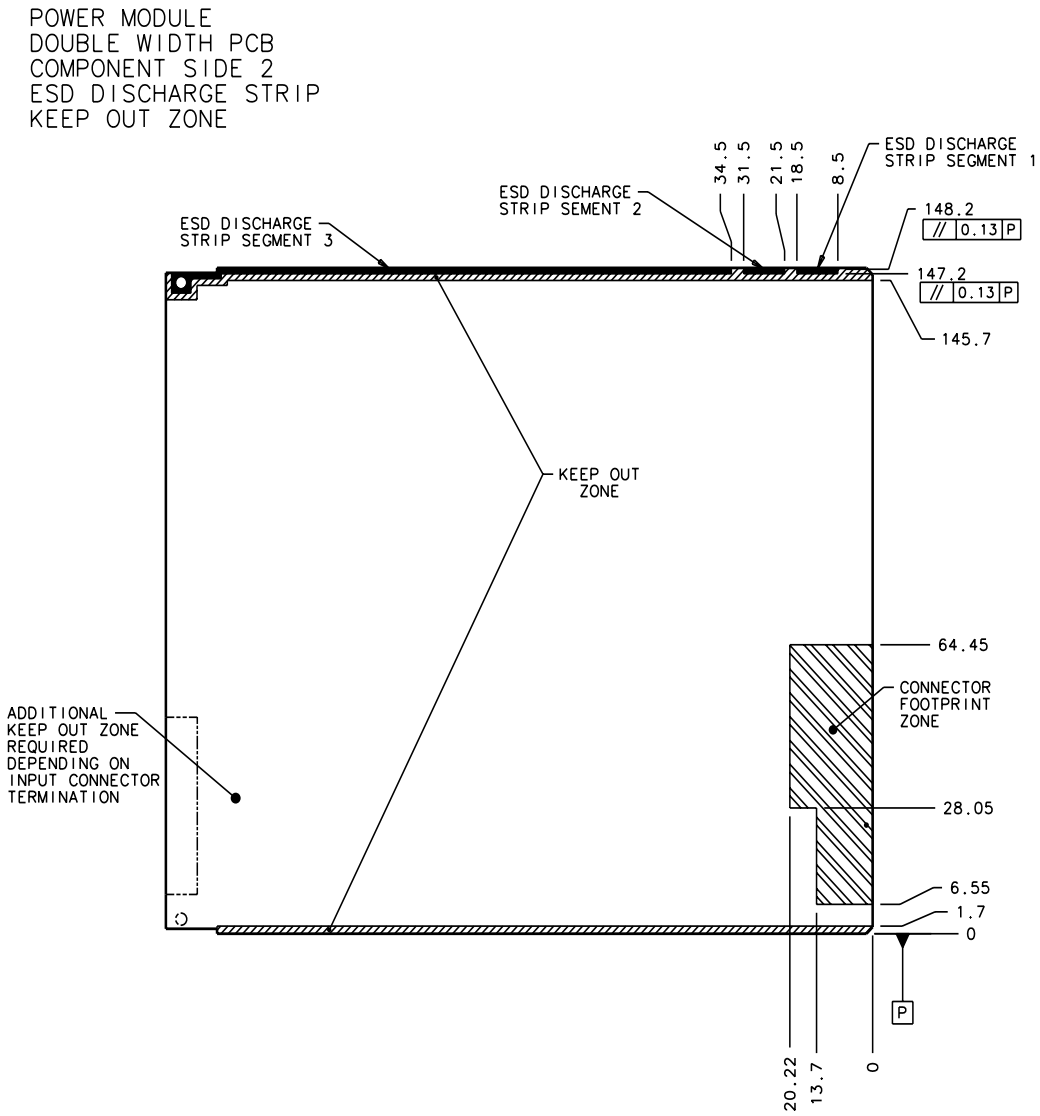

2.10.2 Power Module component height

Requirements

REQ 2.101 Components of a full-height Power Module **shall not** protrude beyond the envelope shown in Figure 2-78. The envelope height **shall** be understood as defined to follow the warpage of the PCB.

Property of CERN - For Internal Use Only – External Distribution Prohibited

Figure 2-78 Full-height Power Module Component Envelope

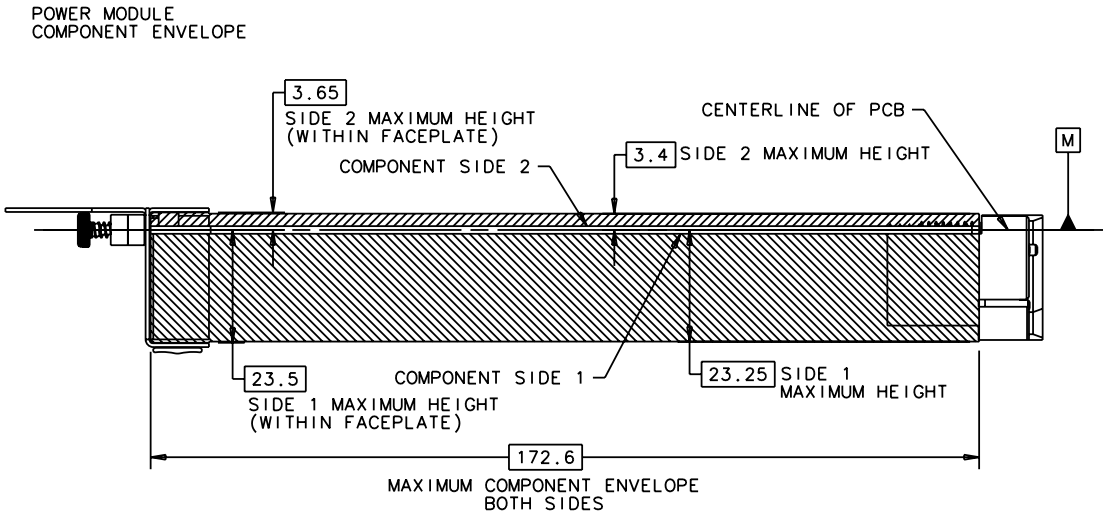

2.10.3 Power Module Face Plate

¶ 28 The Face Plate supports the PCB, input connectors, EMC Gaskets, and the Power Module retention mechanism. The retention mechanism can be the AMC.0 Module latch mechanism, locking bars, or retention screws integral to the faceplate. Face Plates which support the Module latch mechanism or locking bars are described in AMC.0 Section 2.2.6.

¶ 29 Face Plates which use the optional retention screw are described in Figure 2-79 and Figure 2-80. The retention screw is located on a flange which extends beyond the width of a standard AMC faceplate, and mates with a tapped hole in the optional subrack configuration, Figure 2-43. In multi-tier subrack configurations, using Single Width Power Modules, the retention screw flange must be located on one side of the Power Module only, in order to allow the use of AdvancedMC Modules in the tiers above or below the Power Module. Two Face Plate styles are required for Single Width Power Modules using retention screws, so that the module can be positioned in either the top or bottom tier of a multi-tiered subrack, depending on the position of the retention screw flange. If a subrack has more than two tiers Figure 2-19, Single Width Power Modules with retention screws can only be used in the top and bottom tiers, as there is no subrack mating flange available for the middle tiers.

Requirements

REQ 2.102 Face Plates **shall** be conductive in all areas with the exception of the front face.

REQ 2.103 The front face **may** have a resilient finish or overlay which is conductive or non-conductive.

REQ 2.104 Face Plates **shall** provide a Handle for inserting/extracting the module or support the AMC.0 Module latch mechanism.

Property of CERN - For Internal Use Only – External Distribution Prohibited

REQ 2.105 Face Plates for full-height Power Modules **should** adhere to the dimensions shown in Figure 2-79 (Single-Width) or Figure 2-80 (Double-Width).

Figure 2-79 Face Plate Single-Width Power Module

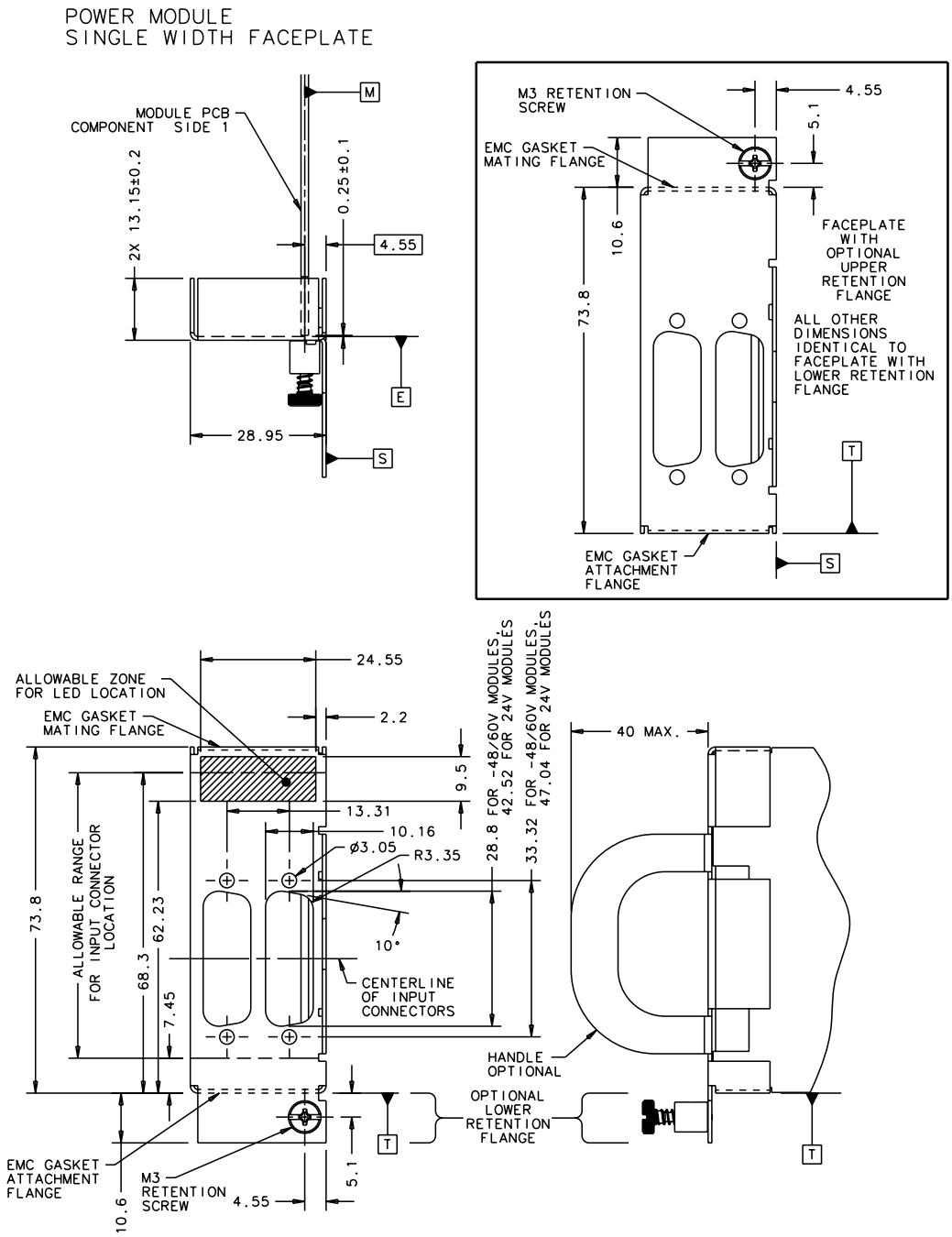

Property of CERN - For Internal Use Only – External Distribution Prohibited

Figure 2-80 Face Plate Double-Width Power Module

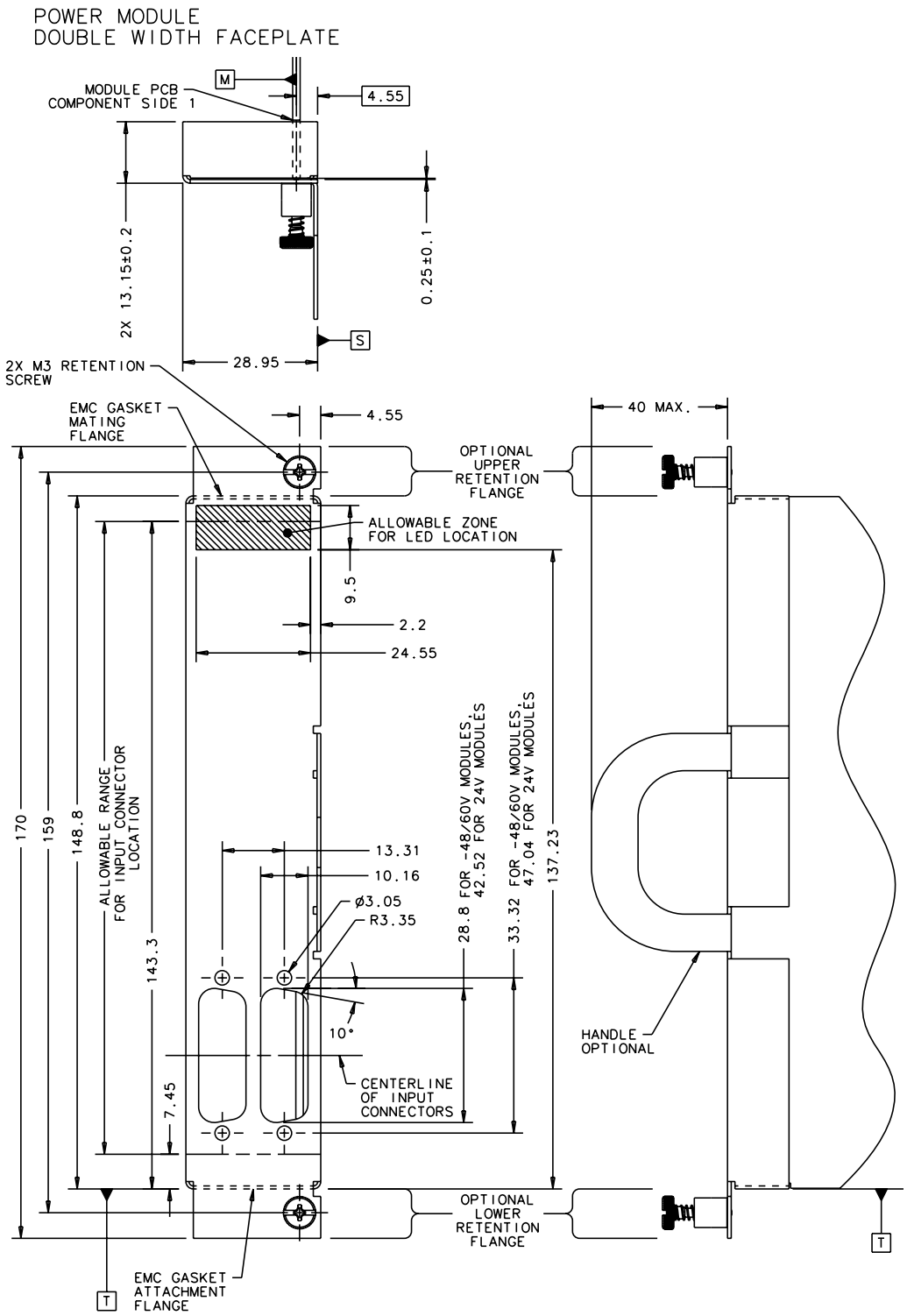

Property of CERN - For Internal Use Only – External Distribution Prohibited

2.10.4 Power Module Handle/Latch mechanism

Requirement

REQ 2.106 The module handle/latch mechanism described in AMC.0 Section 2.2.8 **should** be used for power modules.

2.10.5 Power Module LEDs

¶ 30 The Hot Swap indicator BLUE LED is required for Power Modules. Use of other LEDs to indicate module status is optional for Power Modules. Figure 2-79 and Figure 2-80 show the allowable zone for LEDs/light pipes on the faceplate.

Requirements

REQ 2.107 LEDs or light pipes **shall** be located within the allowable zone indicated in Figure 2-79 and Figure 2-80.

REQ 2.108 Each LED or light pipe **should** provide a minimum viewing angle of 120°.

REQ 2.109 Light emitted from each LED or light pipe **should** be visible from 8 m from the Face Plate with no front cables installed.

REQ 2.110 The BLUE LED **shall** indicate hot swap status and it **shall** be located in accordance with AMC.0.

REQ 2.111 The BLUE LED **shall** comply with requirements for Modules as specified in AMC.0 Section 3.3.1 “BLUE LED”, except as specified in this specification.

REQ 2.112 The AMC.0 module handle/latch mechanism **should** be used to operate the module extraction request switch.

REQ 2.113 If LED1 is used, it **shall** be red or amber.

2.10.6 Power Module EMC gasketing

Requirement

REQ 2.114 The requirements of AMC.0 section 2.2.9 **shall** be met, including when a retention screw flange is present.

2.10.7 Power Module safety covers

¶ 31 In the case where the Power Module is connected to input voltage and an adjacent Module is not inserted, there is the possibility of contact with exposed power.

Requirements

REQ 2.115 Access to power **shall** be determined using the test finger per IEC60950-1 Figure 2A

REQ 2.116 Safety covers **may** be used to assure there can be no contact to exposed power.

REQ 2.117 Safety covers **shall** adhere to component envelope, keepout, and Creepage/Clearance requirements as cited in this Section.

Property of CERN - For Internal Use Only – External Distribution Prohibited

2.10.8 Power Module labels

Requirements

REQ 2.118 The requirements of AMC.0 Section 2.2.10 **shall** be met.

REQ 2.119 Caution/Warning labels **may** be required to advise proper Power Module disconnect/ extraction procedures.

2.10.9 Power Module Backplane Connector

¶ 32 Refer to Section 7 for details of the output Backplane Connector and its footprint on the Backplane.

Requirement

REQ 2.120 Backplane Connectors **shall** be positioned on the Backplane as shown in Figure 2-81.

Figure 2-81 Power Module Backplane Connector positioning

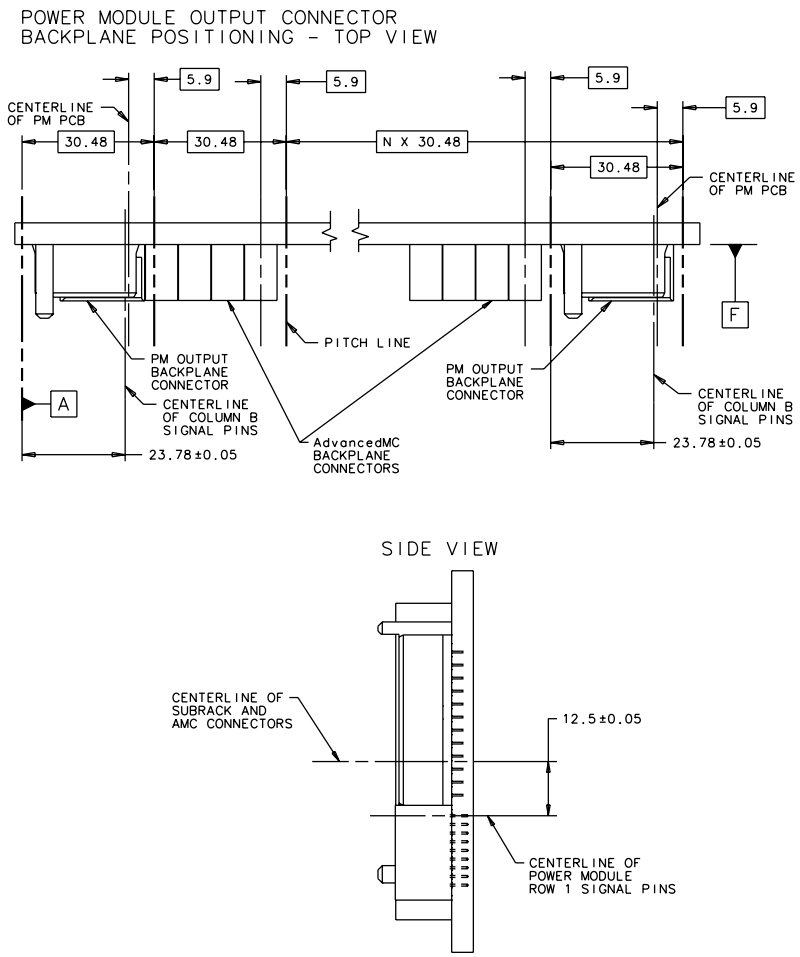

Property of CERN - For Internal Use Only – External Distribution Prohibited

2.11 MCH Module

¶ 33 This section describes the mechanical features of a modular MCH which allow it to interface with the MicroTCA Subrack. MCHs that do not fit into the Subrack are permitted, but the mechanical features are not described by this specification. MCH form factors other than as described in this section are also permitted, but are beyond the scope of the specification.

¶ 34 The MCH Module Connectors and MCH Backplane Connectors are defined in Section 7. The MCH management functions are described in Section 3.

2.11.1 Module types

Requirements

REQ 2.121 The MCH functionality **may** be implemented on the backplane, outside the subrack, or as an MCH Module which fits within the subrack.

REQ 2.122 MCH Module form factor **shall** be as described in the AMC.0 specification, with the exceptions described in this section.

REQ 2.123 The MCH Module **may** have multiple tongues on its interface to the Backplane, as shown in Figure 2-82.

REQ 2.124 MCH **shall** have a maximum mass of 350 grams for a Single Width / Full Height and 700 grams for a Double Width/Full Height Module.

REQ 2.125 MCHs **shall** have LED placement similar to AMC.0 Modules.

Figure 2-82 MCH Module types

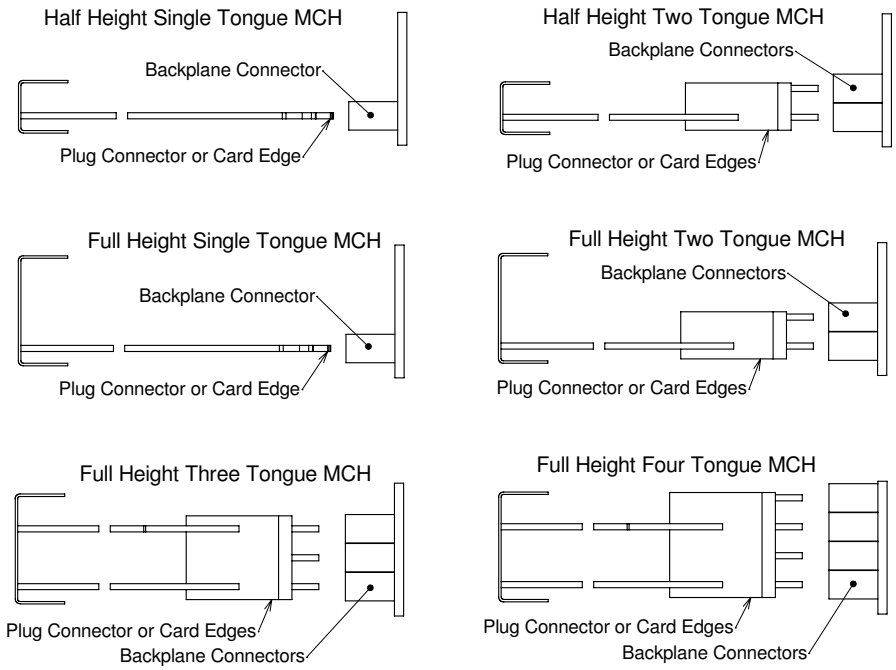

Property of CERN - For Internal Use Only – External Distribution Prohibited

2.11.2 MCH PCB dimensions

¶ 35 MCH PCB dimensions vary depending on two conditions; their position in the module (tongue 1, 2, 3, or 4), and whether they are intended to be used with a plug Connector.

¶ 36 Figure 2-83 and Figure 2-84 show typical arrangements of MCH PCBs.

Figure 2-83 Typical MCH-PCB arrangements—Card Edge Connector styles

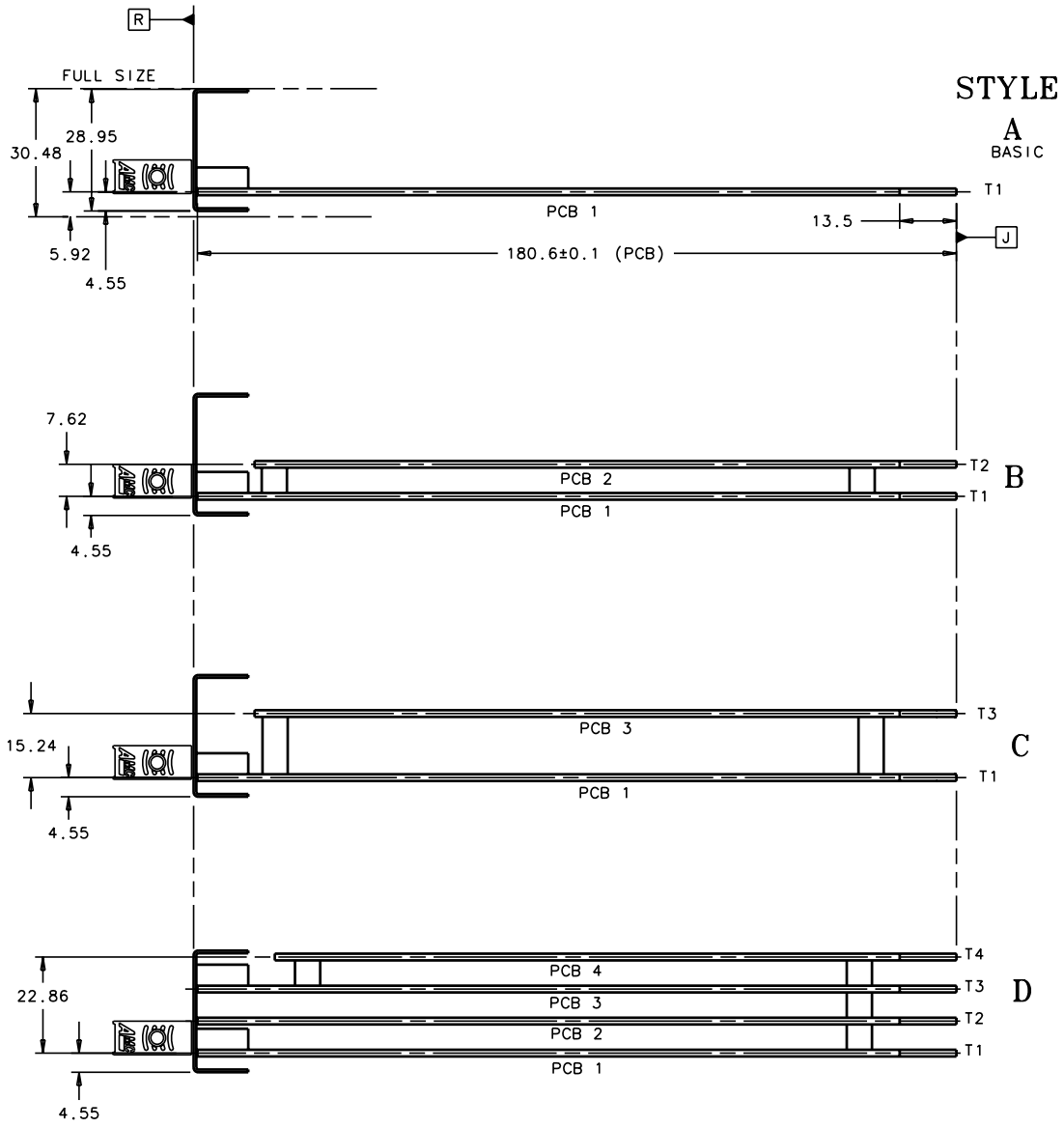

Property of CERN - For Internal Use Only – External Distribution Prohibited

Figure 2-84 Typical MCH-PCB arrangements—Plug Connector styles

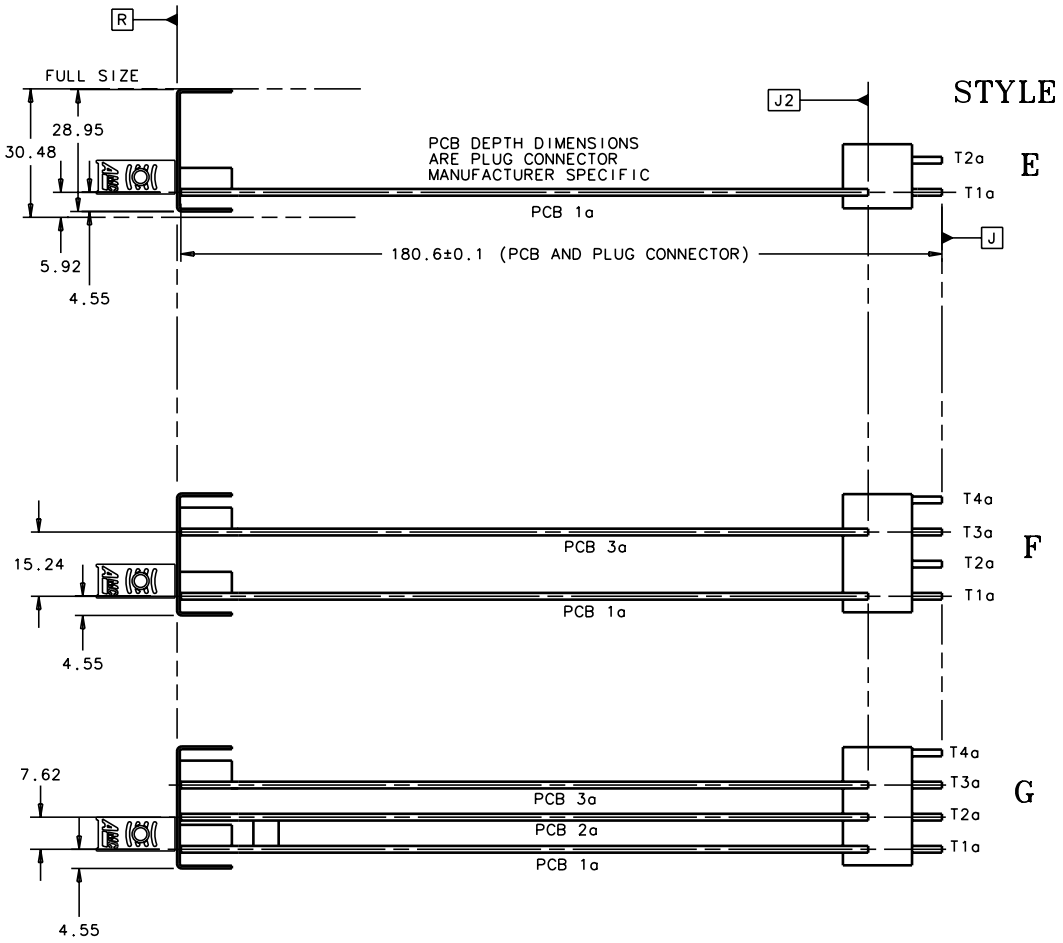

¶ 37 The nomenclature for the PCBs is:
a. PCB 1 - Tongue 1, card edge Connector style
b. PCB 1a - Tongue 1a, plug Connector Style
c. PCB 2 - Tongue 2, card edge Connector style
d. PCB 2a - Tongue 2a, plug Connector style
e. PCB 3 - Tongue 3, card edge Connector style
f. PCB 3a - Tongue 3a, plug Connector style
g. PCB 4 - Tongue 4, card edge Connector style

¶ 38 PCBs 1 and 3 are guided by card guide rails in the subrack. PCB 3 has a notch which clears an insertion barrier at the rear of the card guide. This barrier prevents an AdvancedMC Module from being inserted into Backplane Connector 3.

¶ 39 PCBs 2 and 4 do not use card guides and therefore are sized to fit the allowed component envelope of an AdvancedMC Module. An insertion barrier is placed at the front of the subrack to prevent AdvancedMC Modules from being inserted into Backplane Connectors 2 or 4.

Property of CERN - For Internal Use Only – External Distribution Prohibited

¶ 40 When used with a plug Connector, the depth of the PCB is implementation specific and is determined by the requirements of the plug Connector manufacturer.

¶ 41 PCB 1 is attached to the faceplate and supports the AdvancedMC Module handle/latch mechanism. The attachment of the other PCBs to the faceplate is optional and implementation specific.

Requirements

REQ 2.126 All MCH PCBs **shall** be 1.6±0.16mm thick.

REQ 2.127 PCB 1 **shall** adhere to the dimensional requirements of an AMC.0 Module PCB, including keep out zones and ESD strip.

REQ 2.128 PCB 1a dimensions **shall** adhere to Figure 2-85, "MCH-PCB 1a dimensions"

REQ 2.129 PCB 1a **shall** have the AMC.0 specified Module PCB keep out zones, face plate mounting details, and three segment ESD strip located on the upper edge, Component Side 2.

REQ 2.130 PCB 1 and 1a **shall** provide faceplate attachment means that ensures conductivity between the face plate and Segment 3 of the ESD strip.

REQ 2.131 PCB 1 and 1a **shall** support the AMC.0 Module handle and latch mechanism.

REQ 2.132 PCB 1a when assembled to a plug Connector **shall** have a total depth dimension of 180.6±0.1mm.

REQ 2.133 PCB 2 and 4 dimensions **shall** adhere to Figure 2-86, "MCH-PCB 2 and PCB 4 dimensions"

REQ 2.134 PCBs 2a and 4 **may** have interconnects to PCB 1 and/or 3; PCB 1a and/or 3a.

REQ 2.135 PCBs 2 and 4 **may** have face plate attachment provision.

REQ 2.136 PCB 3 dimensions **shall** adhere to Figure 2-88, "MCH-PCB 3 dimensions"

REQ 2.137 PCB 3a dimensions **shall** adhere to Figure 2-89, "MCH-PCB 3a dimensions"

REQ 2.138 PCB 3 **may** have interconnects to PCB 1 or 2.

REQ 2.139 PCB 3 and 3a **may** have face plate attachment provision.

Property of CERN - For Internal Use Only – External Distribution Prohibited

Figure 2-85 MCH-PCB 1a dimensions

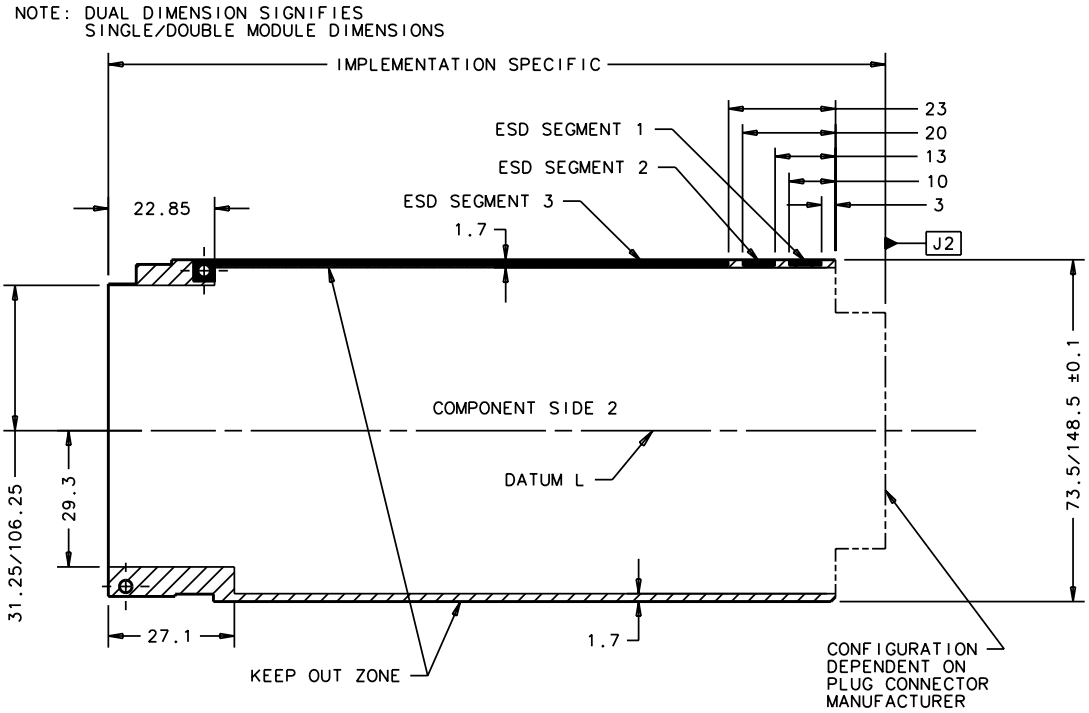

Figure 2-86 MCH-PCB 2 and PCB 4 dimensions

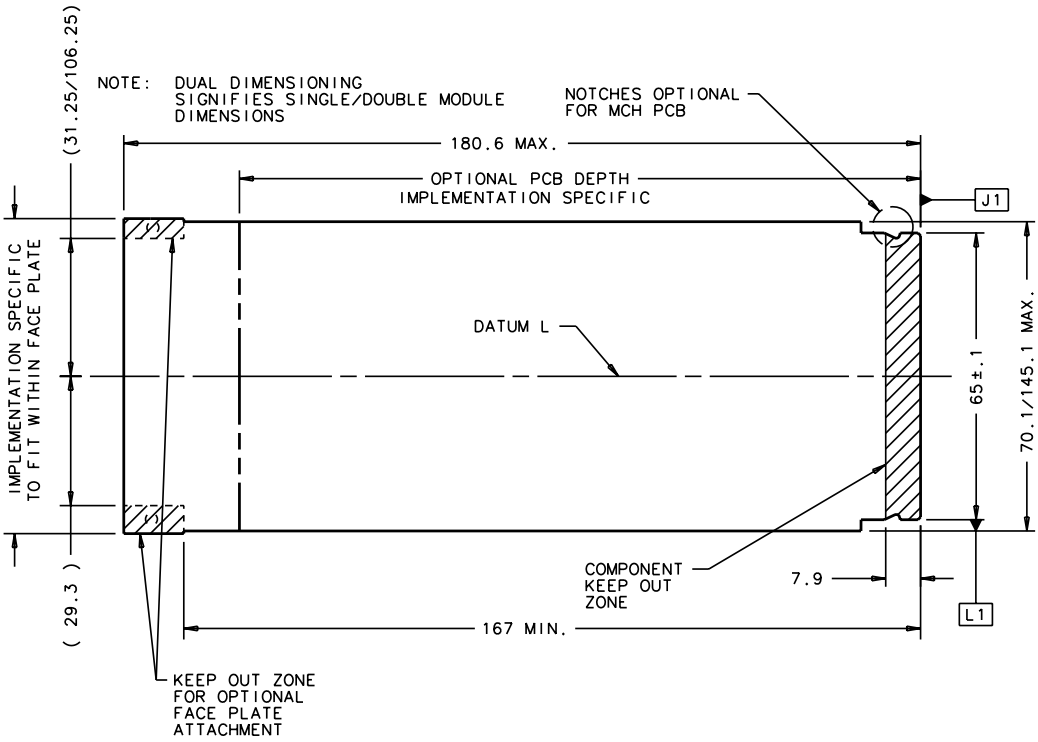

Property of CERN - For Internal Use Only – External Distribution Prohibited

Figure 2-87 MCH-PCB 2a dimensions

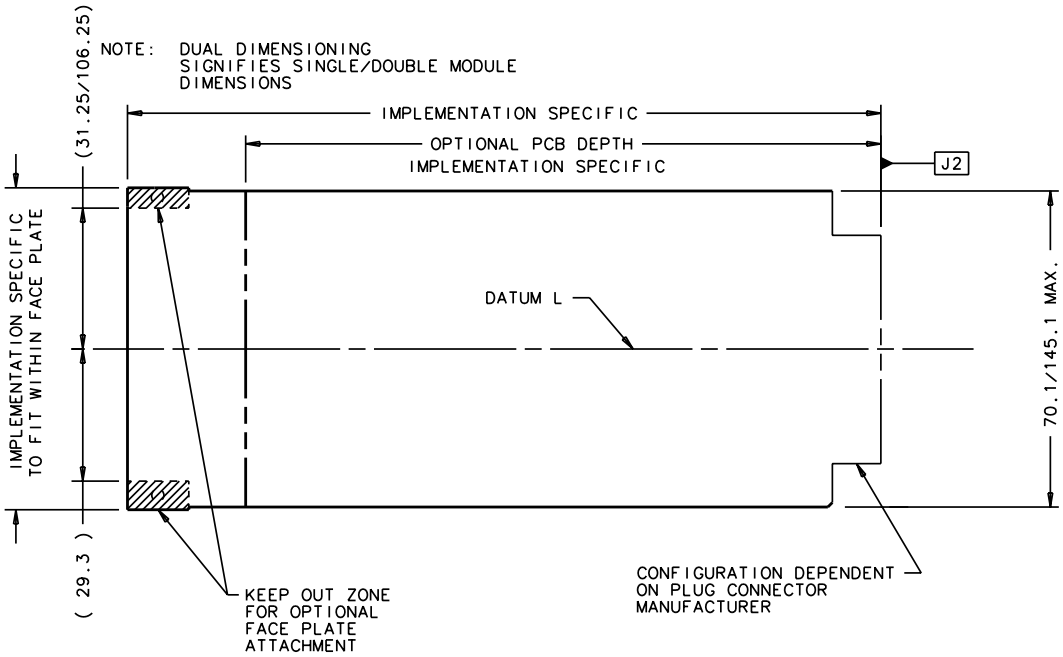

Property of CERN - For Internal Use Only – External Distribution Prohibited

Figure 2-88 MCH-PCB 3 dimensions

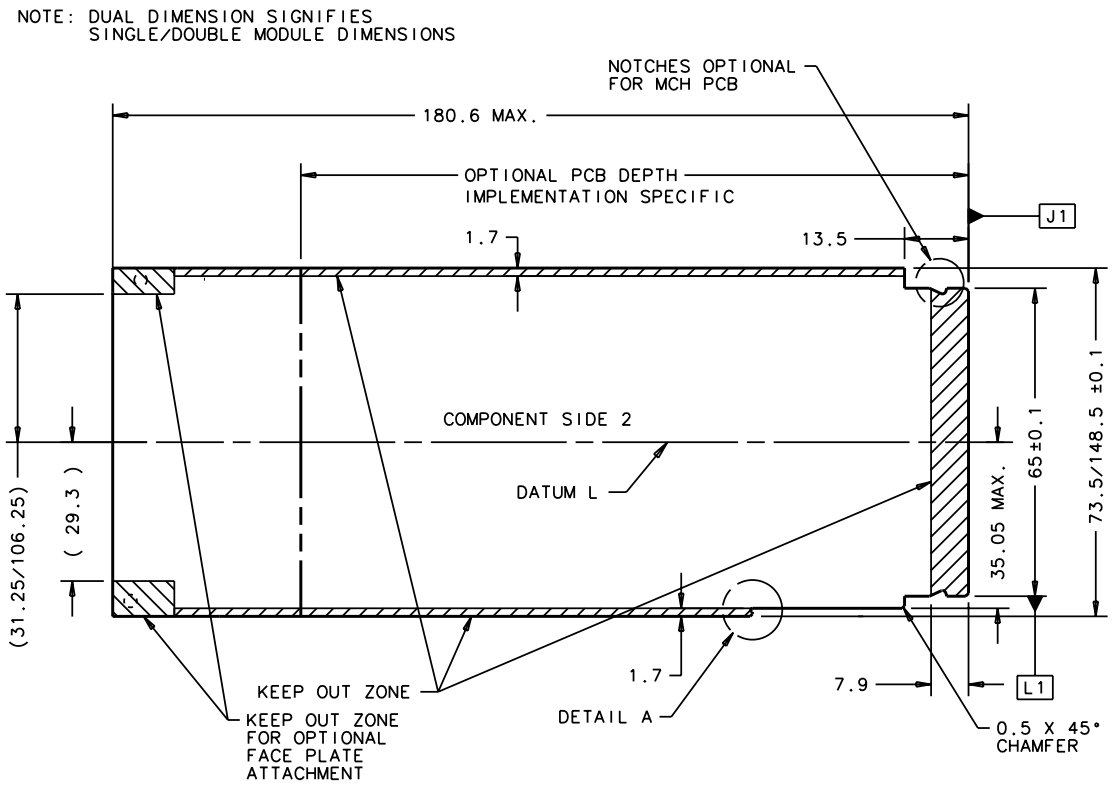

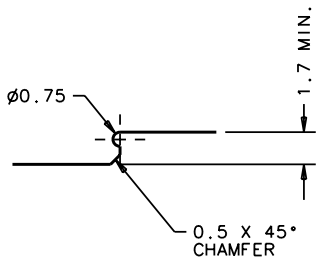

DETAIL A

Property of CERN - For Internal Use Only – External Distribution Prohibited

Figure 2-89 MCH-PCB 3a dimensions

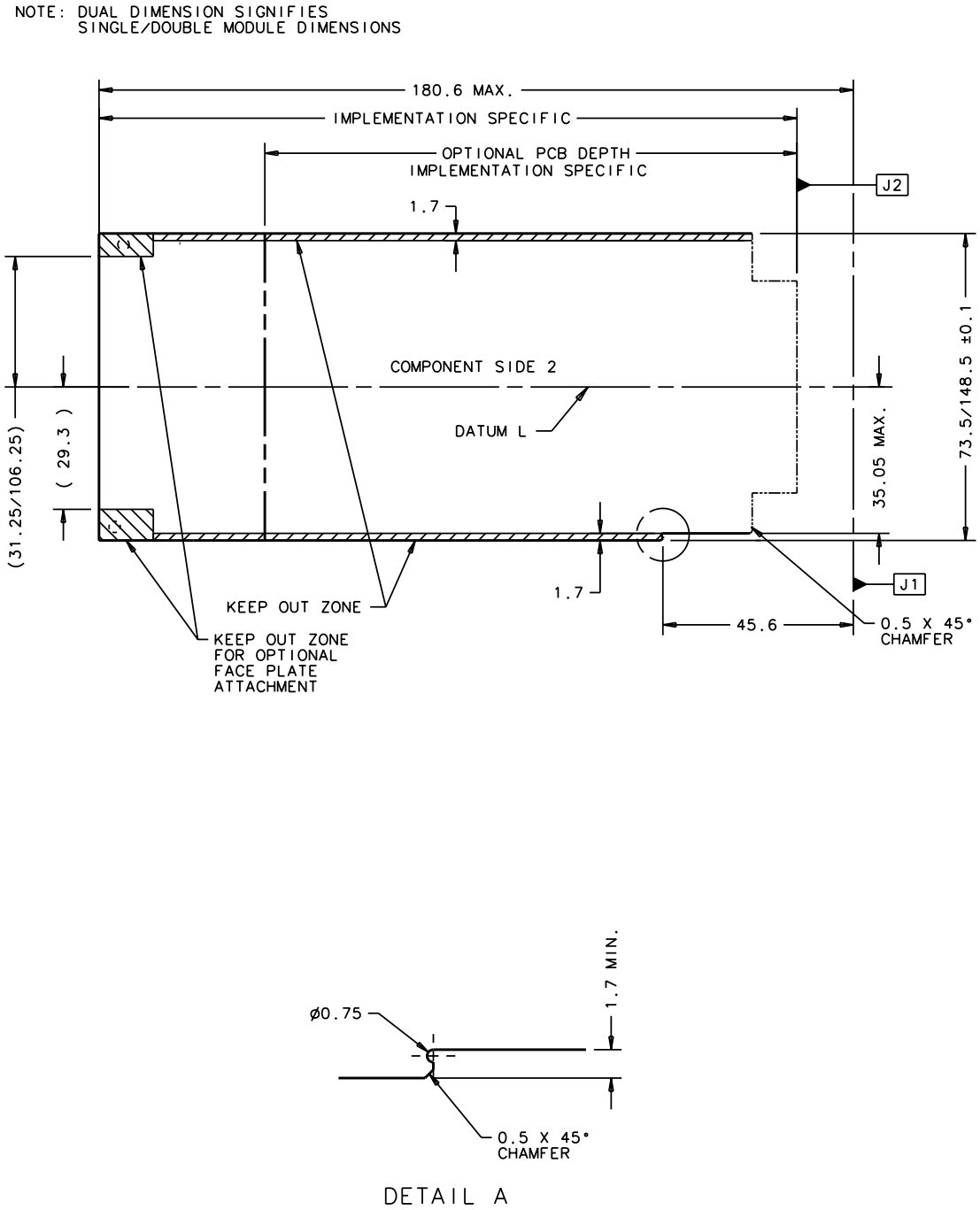

Property of CERN - For Internal Use Only – External Distribution Prohibited

2.11.3 MCH Subrack Slot details

¶ 42 The Subrack slot for the MCH uses insertion barriers in the tongue 2, 3, and 4 positions in order to prevent inserting an AdvancedMC Module in the MCH slot. The insertion barrier for tongues 2 and 4 are located at the front of the subrack, while the insertion barrier for tongue 3 is located towards the rear of the subrack. The insertion barriers are only present at the bottom of the subrack.

Requirement

REQ 2.140 Insertion barriers **shall** be located in the subrack MCH Slot per Figure 2-90, "MCH - PCB Insertion barrier—front view".

Figure 2-90 MCH - PCB Insertion barrier—front view

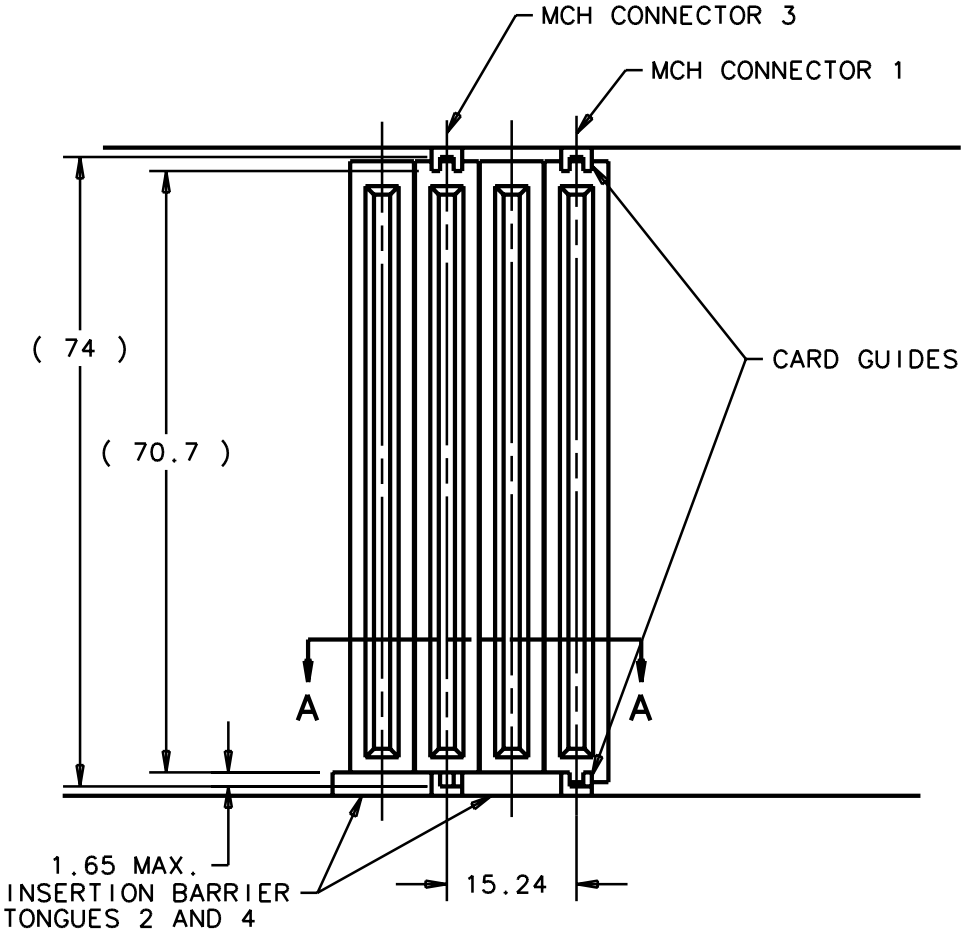

Property of CERN - For Internal Use Only – External Distribution Prohibited

Figure 2-91 MCH-PCB insertion barrier—top view

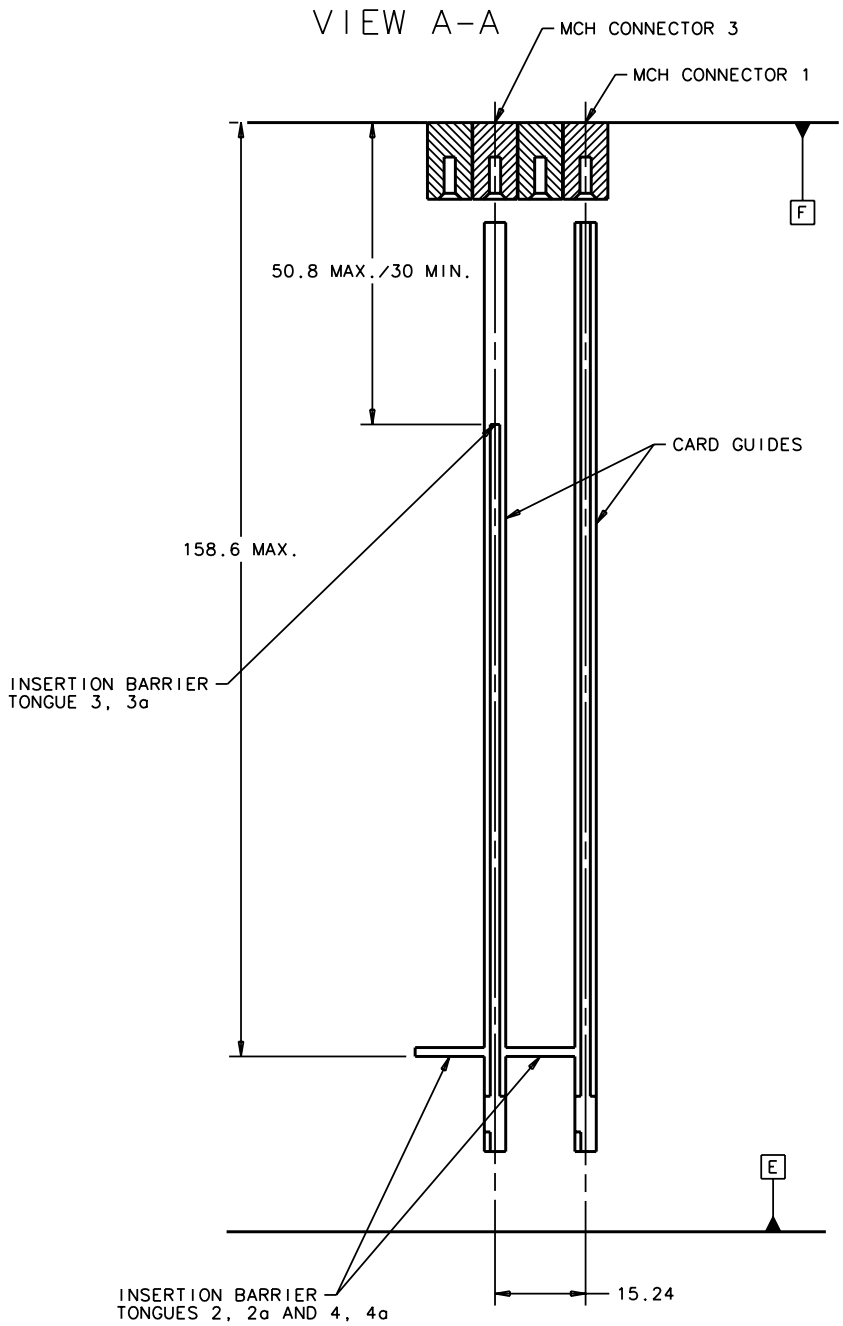

Property of CERN - For Internal Use Only – External Distribution Prohibited

2.11.4 Plug Connector

Requirements

REQ 2.141 The plug Connector is an option. Plug connectors **shall** meet the dimensions specified in this section. (followed by separate 'may' requirement) Other designs (such as the card edge interface design) **may** be used for the multi-tongue design, as long as they are within the dimensions envelope specified in this section.

REQ 2.142 The shape of the parts **may** deviate from the one given in the drawings, as long as the specified dimensions are not affected and the intended functionality is provided.

REQ 2.143 Dimensions not specified **may** be chosen according to required characteristics and intended use.

REQ 2.144 The mating interface of multi tongue MCH **shall** be able to mate with the aggregated AMC backplane connectors specified in Section 7.3.3.1.

Figure 2-92 Overall dimensions of two-tongue MCH plug Connector area

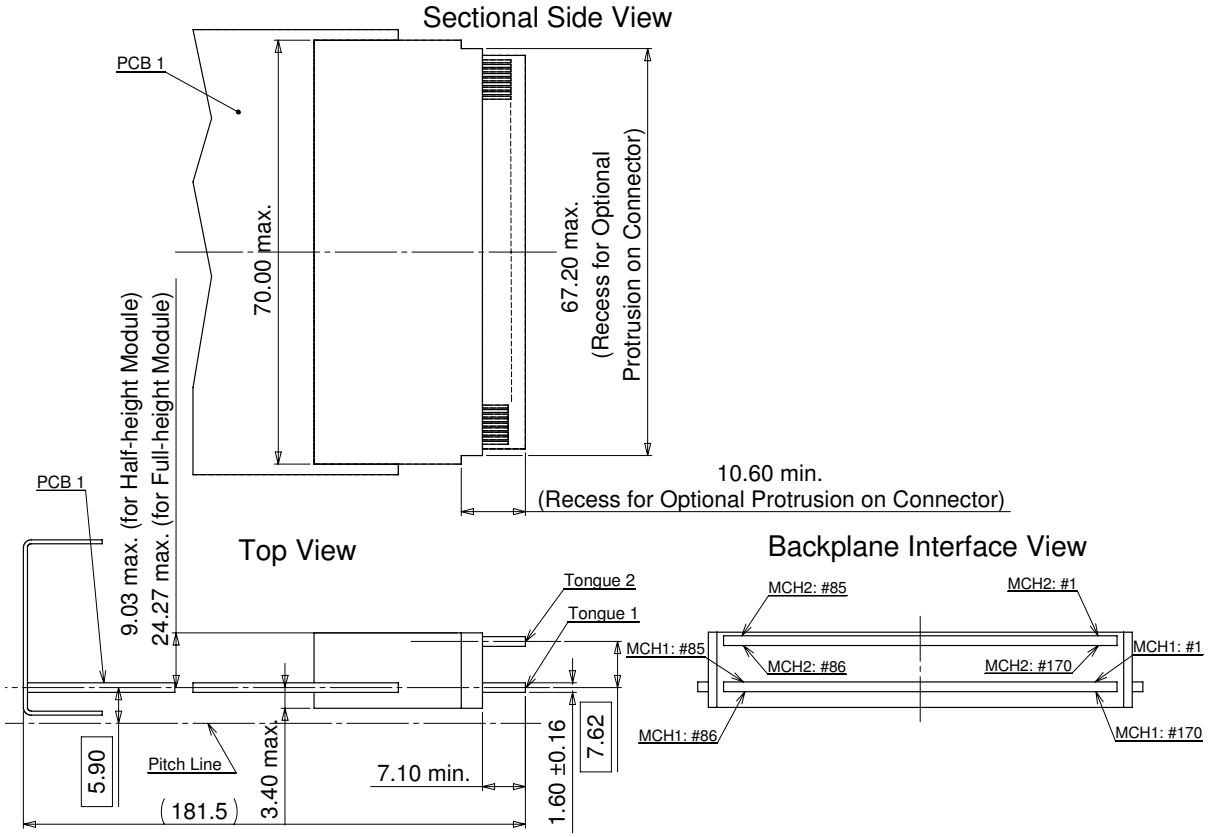

Property of CERN - For Internal Use Only – External Distribution Prohibited

Figure 2-93 Overall dimensions of three-tongue MCH plug Connector area

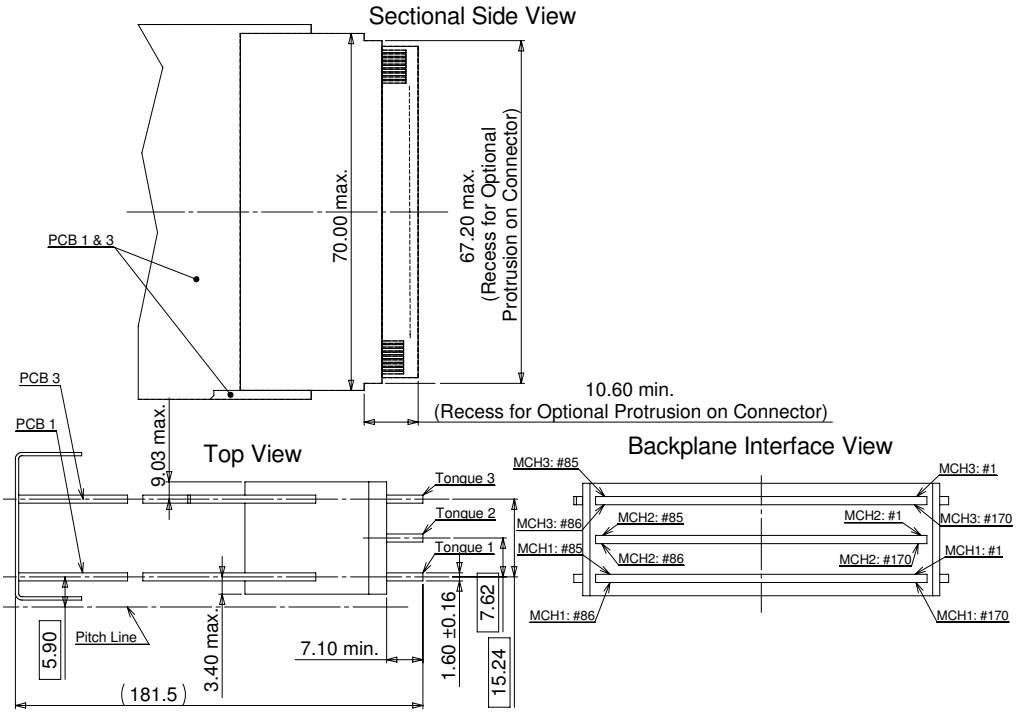

Figure 2-94 Overall dimensions of four-tongue MCH Connector area

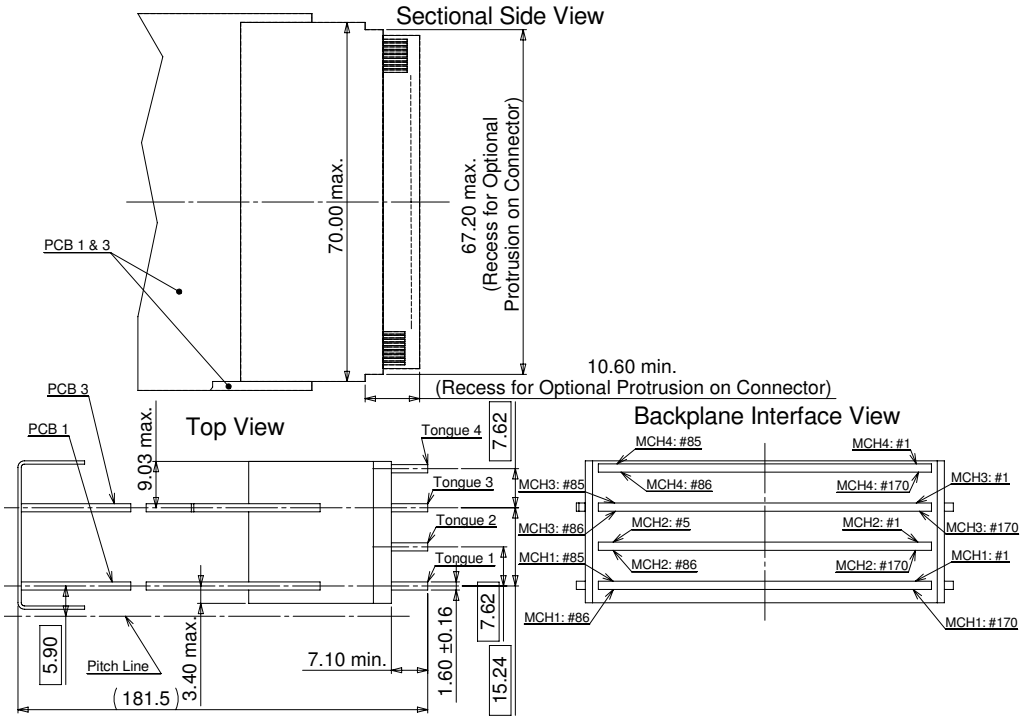

Property of CERN - For Internal Use Only – External Distribution Prohibited

Figure 2-95 MCH Tip

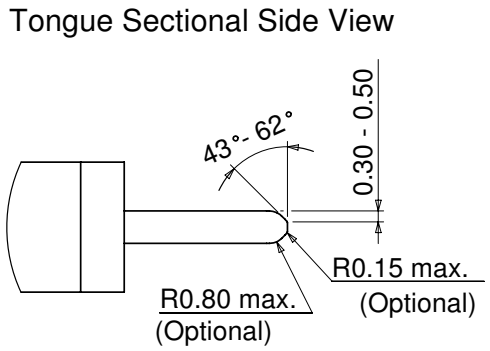

2.11.5 Sequencing and contact area

¶ 43 The MicroTCA Carrier Hub (MCH) uses four steps of sequential contacts during insertion to the Backplane Connectors. The mating step required for each pin is specified in Section 6.

Requirements

REQ 2.145 In order to get a lower insertion force on multiple-tongue MCH, the tip of each tongue **may** be mechanically sequenced away from the Fully-Mated Datum, as defined by the longest tongue on each MCH. Such sequencing must not interfere with the electrical sequencing on all tongues as a unit, as defined in Figure 2-96, "MCH plug contact mating step dimensions".

REQ 2.146 The transition shape of the optional offset on the MCH tip **shall** be either Type A or B, as shown in Figure 2-97.

Property of CERN - For Internal Use Only – External Distribution Prohibited

Figure 2-96 MCH plug contact mating step dimensions

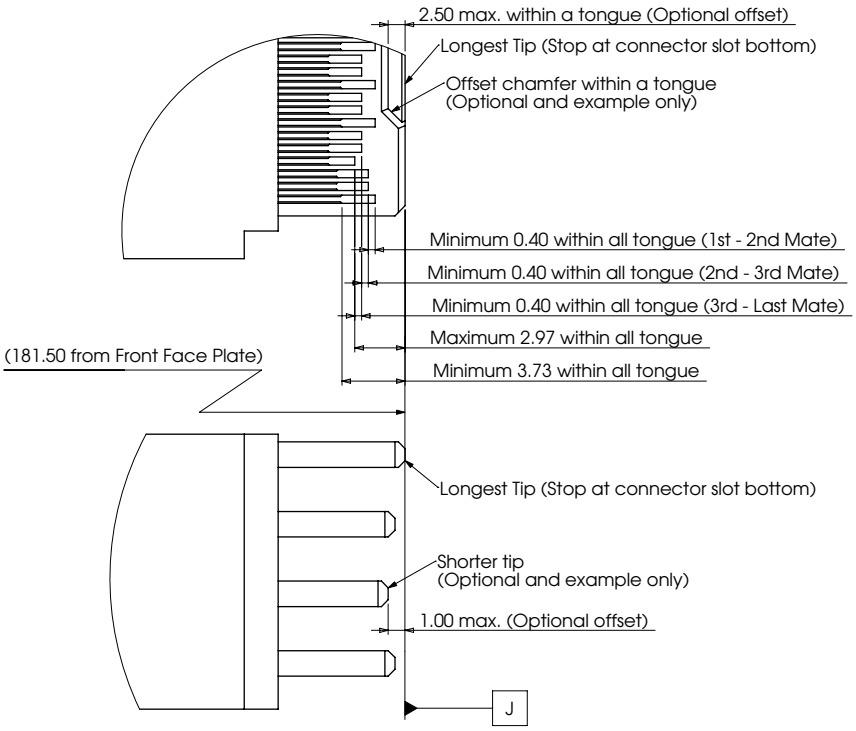

Figure 2-97 MCH offset transition

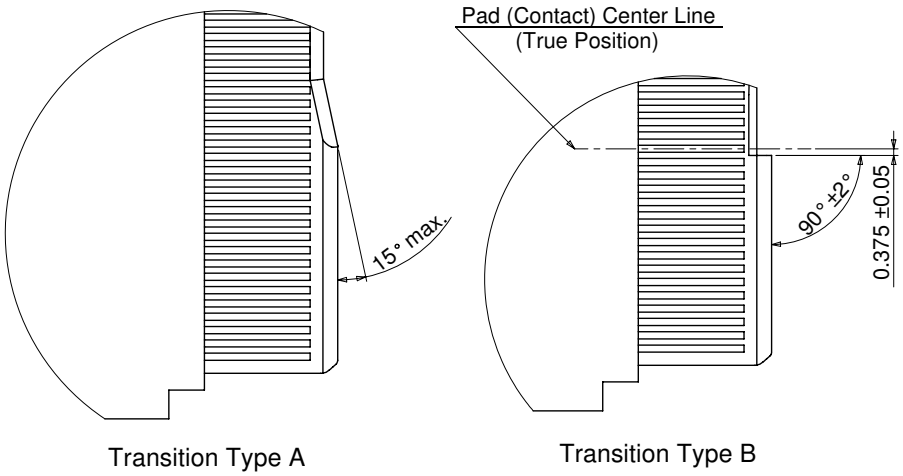

Property of CERN - For Internal Use Only – External Distribution Prohibited

2.11.6 MCH positioning

Requirement

REQ 2.147 The positioning of the MCH Modules **shall** be as shown in Section 2.4, "AdvancedMC Module orientation, location, and positioning", except for the MCH four tongue Module see REQ 2.148.

REQ 2.148 The positioning of a MCH four tongue Module in the outermost left position **shall** be as shown in Figure 2-98. The Backplane **may** be extended by ≥2.03 mm.

REQ 2.149 MCHs **should** be located in the second to left most and optionally second to the right most slot (adjacent to the PMs).

Figure 2-98 Positioning MCH four tongue Module, special feature—top view

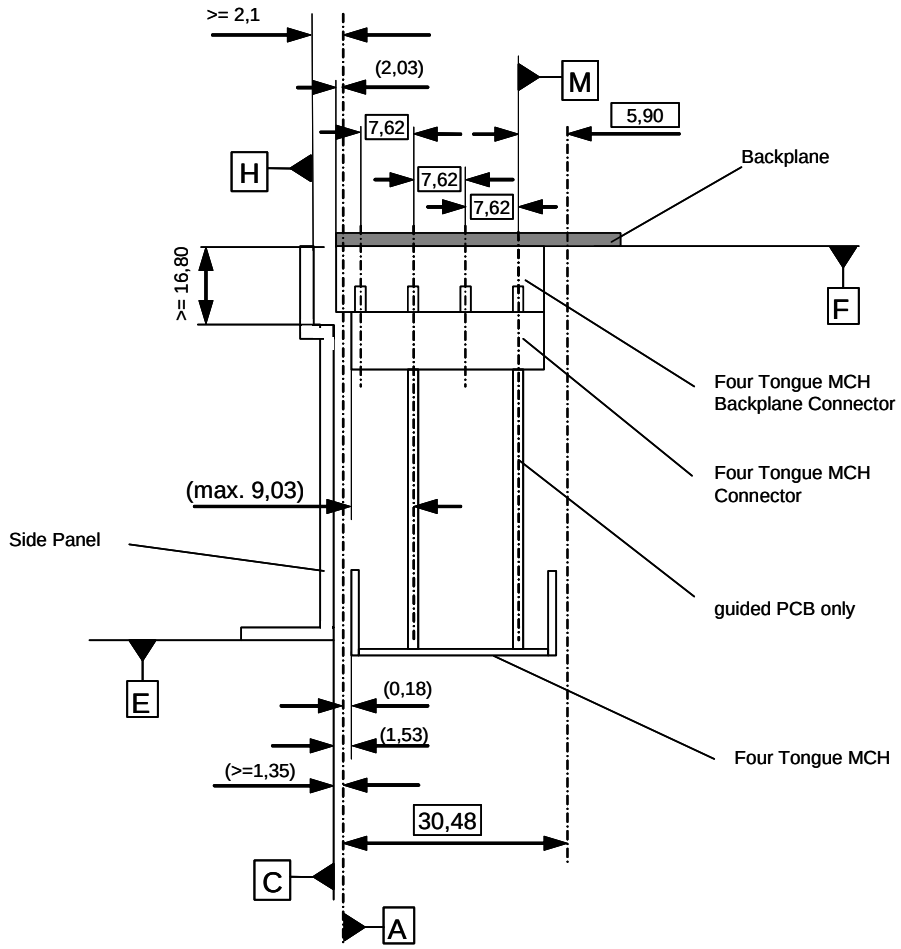

Property of CERN - For Internal Use Only – External Distribution Prohibited

2.12 Air flow management

¶ 44 Airflow Management of a MicroTCA Shelf is defined in Section 5, "Thermal". Airflow direction of an AMC.0 Module is defined in AMC.0.

Figure 2-99 Airflow direction of AdvancedMC Modules

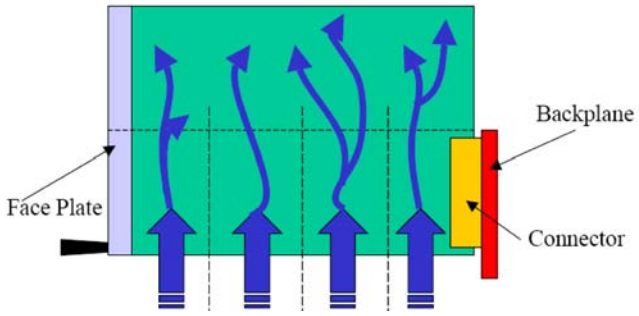

2.13 Auxiliary Connector (Zone 2 and Zone 3) keying

¶ 45 A simple mechanical Auxiliary Connector keying method is introduced to simplify and bind interoperability between AdvancedMCs and MicroTCA Backplanes that use the Backplane Connector Zones 2 and 3 areas, as defined in Figure 2-100. By example, a zone 3 backplane can span the entire Shelf, Cube or Pico design, and provide supplementary interconnect. This Framework is meant to restrict how AdvancedMCs and MicroTCA Backplanes are designed to take advantage of the Zone 2 and 3 in such a way as to allow forward compatibility and prevent any mechanical or electrical damage to any of these components.

¶ 46 Figure 2-100 shows four examples of how a given Double-Width, Full-Height Slot can be populated with up to four AdvancedMC Backplane Connectors (Con 1 to 4) and what is defined as Zone 2 and 3 in such Slots. Note that the same zone naming convention applies to the other three Slot types.

Property of CERN - For Internal Use Only – External Distribution Prohibited

Figure 2-100 Zone 3 and Zone 2 Backplane Connector regions—front view

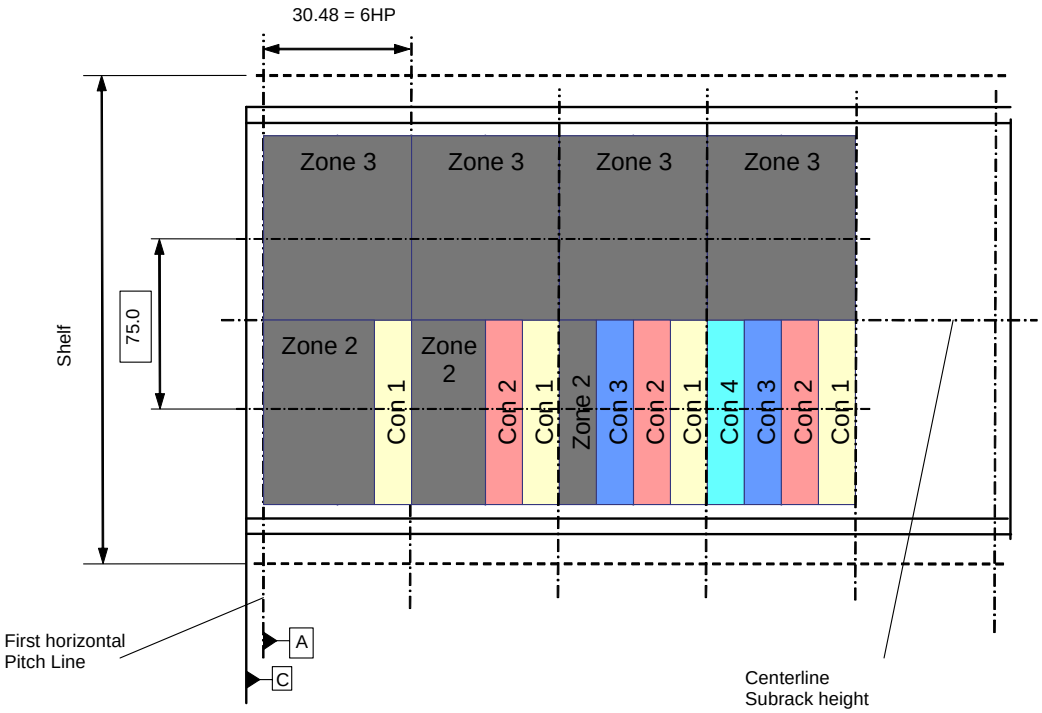

¶ 47 This mechanical keying method detailed below does not add any requirements to the standard AdvancedMC, assuming that by definition it has to comply with the Board outline and component keep-in areas defined in AMC.0. It allows any standard AdvancedMC to be safely inserted into a Slot that has tall components on the Backplane in Zones 2 or 3.

¶ 48 This mechanical keying method regulates how a standard AdvancedMC can be extended with Auxiliary Connectors and be safely inserted into a MicroTCA Backplane that does not support that specific set of Auxiliary Connectors.

¶ 49 This mechanical keying method regulates how a standard MicroTCA Backplane can be extended with Auxiliary Connectors in Zones 2 and 3 and safely accept extended or standard AdvancedMCs that do not support that specific set of Auxiliary Connectors.

¶ 50 This mechanical keying method applies to all four Slot types. Only the more generic Double-Width, Full-Height type is illustrated in this section.

2.13.1 Component keep-in height

¶ 51 Components on the MicroTCA Backplane must remain within a keep-in height, as shown in Figure 2-101. The reduced height is to keep a clearance between the tongues of a Module and the components on the Backplane. A typical example is an MCH inserted into an AdvancedMC Slot that does not have any Auxiliary Connector in Zones 2 and 3.

Property of CERN - For Internal Use Only – External Distribution Prohibited

Figure 2-101 Zone 3 and Zone 2 component keep-in height

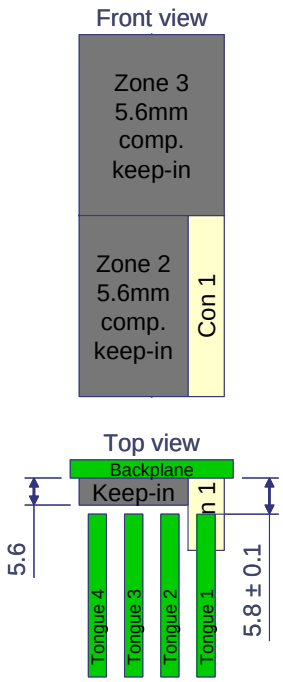

2.13.2 Connector keep-in height

¶ 52 If components, such as connectors, extend outside the component keep-in height, then it is important that they still remain within the connector keep-in height to avoid interfering with the components of a standard AdvancedMC.

¶ 53 It is also important that a mechanical key prevents the tongues of a Module from interfering with the components within this Connector keep-in height on the Backplane. To achieve such mechanical keying, a keying block is used in place of Con 2. The outside dimensions of this keying block are similar to the ones of an AdvancedMC Backplane Connector. Figure 2-102 shows how a Tongue 2 would hit the keying block and prevent the other tongues from hitting the components in the Connector keep-in area. A typical example is an MCH inserted into an AdvancedMC Slot that has some Auxiliary Connector in Zones 2 and 3.

Property of CERN - For Internal Use Only – External Distribution Prohibited

Figure 2-102 Zone 3 and Zone 2 Connector keep-in height

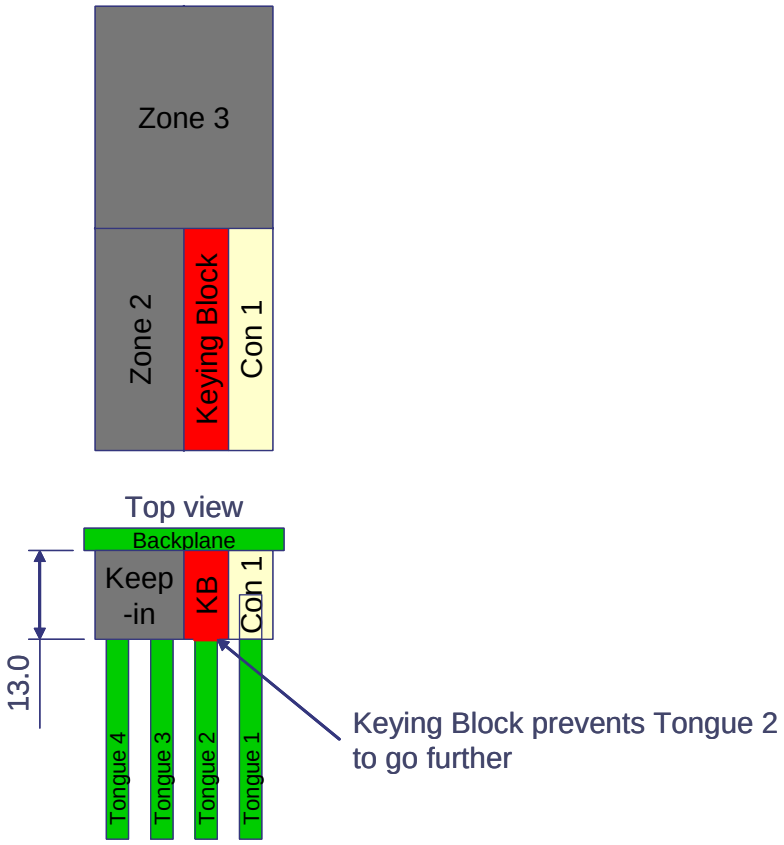

2.13.3 Keying block

¶ 54 While the previously introduced keying block is really just a mechanical blocking element, it is still desirable for a Module that has Auxiliary Connectors in Zones 2 and 3 to actually mate fully. Therefore, the keying block must be capable of mating to Tongue 2, while offering a keying or encoding mechanism. This is achieved by managing holes in the keying block that are compatible and can mate with the Tongue 2 of Modules that are allowed to fully mate in this Slot.

¶ 55 Figure 2-103 shows such a Module where Tongue 2 has a specific keyed outline that can mate with the hole pattern in the keyed keying block. The exact definition and usage of these hole patterns is outside the scope of this specification. It is expected that such definition will be covered in great detail in a MicroTCA.x subsidiary specification. A typical example would be to use such a keying mechanism to regulate how to bring more power to the Module in Power over Ethernet applications through an Auxiliary Connector.

Property of CERN - For Internal Use Only – External Distribution Prohibited

Figure 2-103 Keying block and keyed Tongue 2

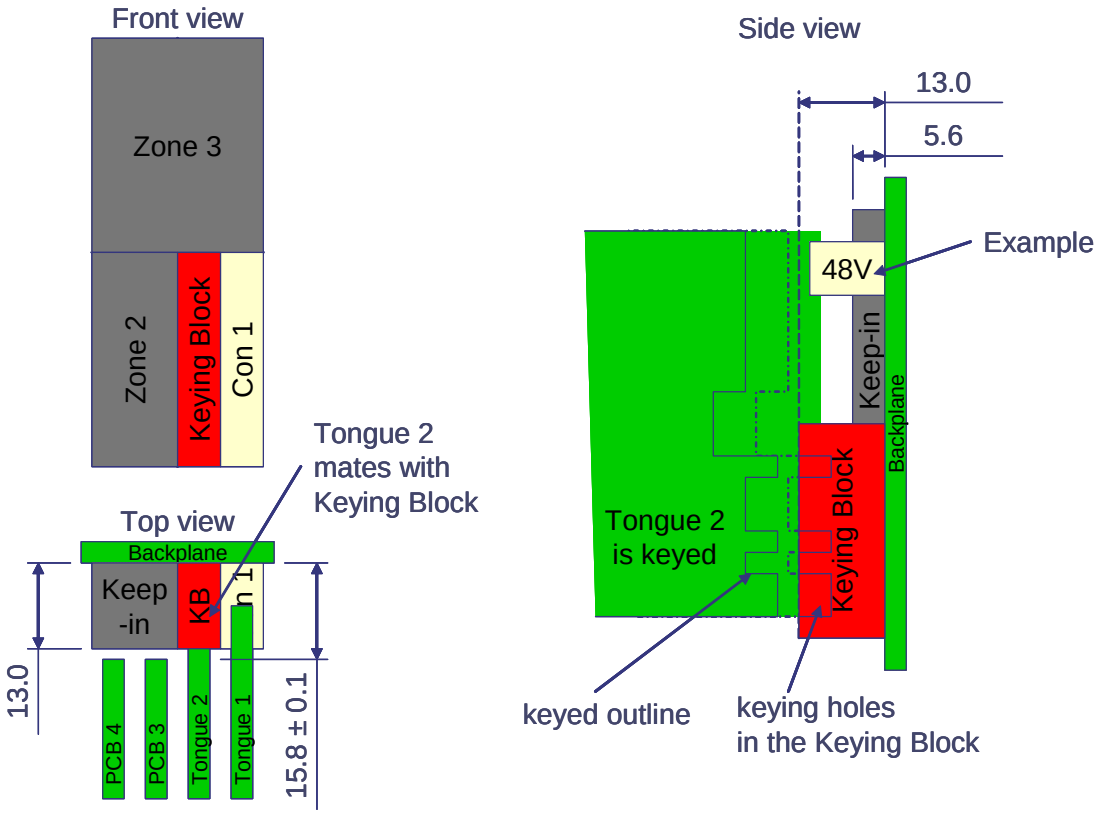

2.13.4 Keying block with electrical connections

¶ 56 One could consider using some sections of the keyed Tongue 2 to carry electrical signals across the keying block, which is now acting as a keyed Connector. Such an implementation is shown in Figure 2-104. It is very important that the electrical interface be electrically compatible with AMC.0.

Property of CERN - For Internal Use Only – External Distribution Prohibited

Figure 2-104 Keying block with electrical connections

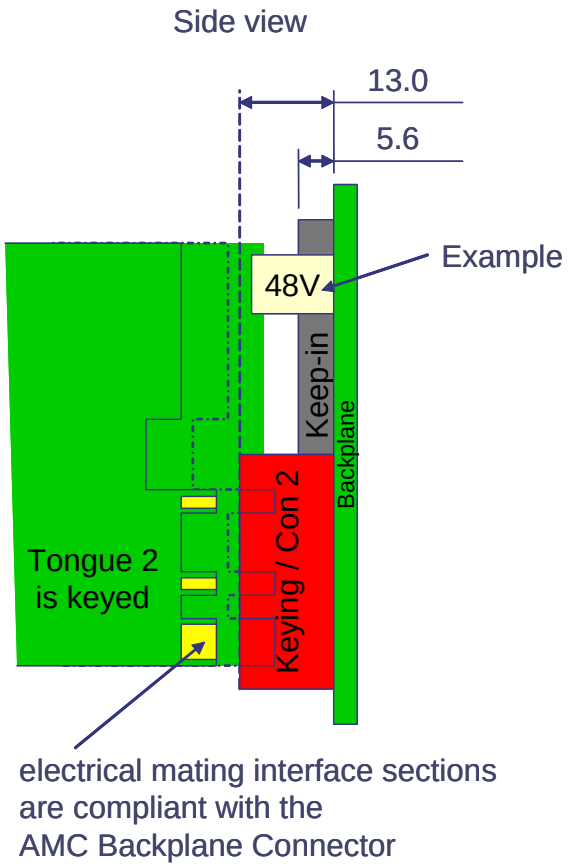

2.13.5 AMC.0 electrically compatible keying block

¶ 57 Figure 2-105 shows the corner case where the Tongue 2 outline actually matches the AMC.0 outline. This particular case is reserved and used for situations where the mating interface of the Connectors in Zone 2 are both mechanically and electrically compatible with AMC.0. A typical example is the MCH.

¶ 58 Note that the components on the Backplane have to fit within the component keep-in height so that a Module with Connectors in Zone 2 and/or 3 will not interfere with these components, since its Tongue 2 would fully mate with the keying block, which is now just a regular AdvancedMC Backplane Connector.

Property of CERN - For Internal Use Only – External Distribution Prohibited

Figure 2-105 AMC.0 electrically compatible keying block

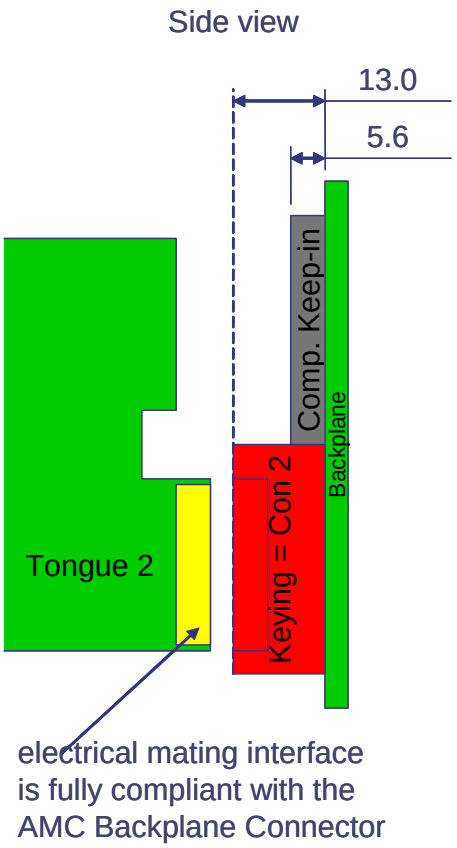

Requirements

REQ 2.150 Modules **shall** have either Tongue 1, or 1 and 2, or 1 and 2 and 3, or 1 and 2 and 3 and 4. Other combinations are explicitly not allowed.

REQ 2.151 Modules **shall** keep the optional Auxiliary Connectors within the AMC.0 Board outline limits. In case of Double-Width Modules, the combined boundary of two Single-Width Board outlines placed 75mm apart shall be used instead.

REQ 2.152 Zone 2 and 3 on the Backplane **shall** have a component keep-in height of 5.6 mm, or else REQ 2.153 **shall** apply.

REQ 2.153 If components in Zone 2 and 3 do not fit within the component keep-in height, then they **shall** fit within the Connector keep-in height of 13.0 mm and a keying block **shall** be installed in the Con 2 position on the Backplane.

REQ 2.154 The keying block **shall** have the same mechanical dimensions as the maximum mechanical envelope of an AdvancedMC Backplane Connector and fit on the Backplane in place of Con 2.

REQ 2.155 The keying block **may** have keying holes which can mate with a Module tongue, provided it has the equivalent male outline.

REQ 2.156 Male sections of the keying interface **shall** be mechanically compatible with the mating interface of the AdvancedMC Backplane Connector.

Property of CERN - For Internal Use Only – External Distribution Prohibited

REQ 2.157 Male sections of the keying interface **may** have an electrical interface with the keying block.

REQ 2.158 If the male sections of the keying interface have an electrical interface, then the electrical interface **shall** be compatible with the AdvancedMC Backplane Connector and the AMC.0 pinout.

2.14 MicroTCA Cube

¶ 59 The core of the Cube is the MicroTCA Subrack concept, as defined in Section 2.3, "Mechanical concept". A Cube is a special case of the MicroTCA Subrack.

Requirements

REQ 2.159 Cubes **may** divide the MicroTCA Subrack in two, three, four, etc. individual sections.

REQ 2.160 Multiple Cubes **may** form a Shelf.

REQ 2.161 Single Cubes **may** define their own external form factor.

REQ 2.162 Cubes **may** only provide for the Subrack structure to contain AdvancedMC, MCH, and Power Modules.

REQ 2.163 Cubes **may** become an internal part of an assembly.

REQ 2.164 Cubes **may** be self contained and installed inside a cabinet, outside a cabinet, wall-mounted, pole-mounted, and suitable for either an indoor or outdoor environment.

REQ 2.165 Cube geometry **shall** adhere to dimensions provided in Section 2.7, "Subrack dimensions".

REQ 2.166 Cube geometry **should** fit the vertical Subrack spacing defined in Section 2.7.

Figure 2-106 Example of a Cube

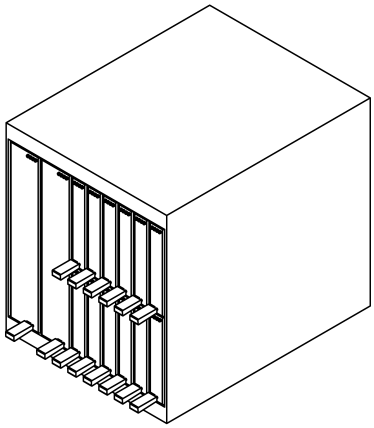

Property of CERN - For Internal Use Only – External Distribution Prohibited

Figure 2-107 Cube concept

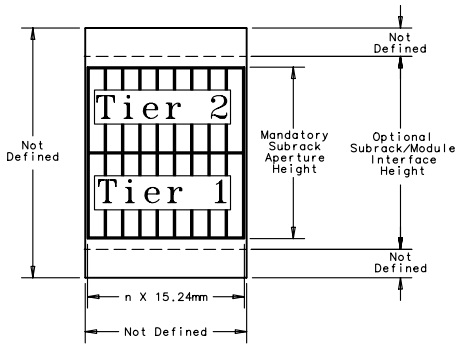

2.15 MicroTCA Pico

¶ 60 The core of the Pico is the MicroTCA Subrack concept, as defined in Section 2.3, "Mechanical concept". The Pico is a subsection of the MicroTCA Subrack. A Pico defines the smallest form of MicroTCA functionality. Pico applications require typically very limited AdvancedMC performance with MCH functionality. Picos are typically a subassembly in a larger assembly.

Requirement

REQ 2.167 A Pico **may** define its own outer form factor.

Figure 2-108 Pico concept

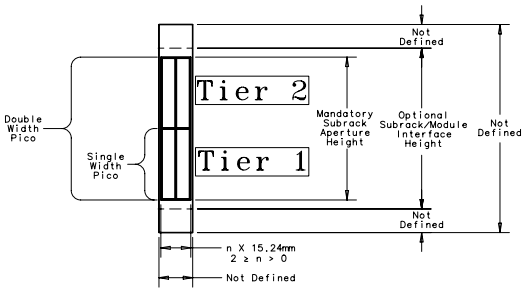

2.16 MicroTCA filler panels

¶ 61 Filler panels play an important role in the MicroTCA Shelf, Cube, or Pico. There are two types of filler panels for MicroTCA Subracks:

- AMC.0-specified filler panels (latch retention)
- Optionally defined filler panels, per Section 2.16, "MicroTCA filler panels" (bolt-on retention)

¶ 62 The AMC.0 filler panel:

Property of CERN - For Internal Use Only – External Distribution Prohibited

- Includes the AMC.0 latch mechanism
- Includes airflow management
- Includes EMC Gasketing
- Looks like a AMC.0 dummy Module

¶ 63 The MicroTCA optional filler panel:

- Uses retention screws

Requirements

REQ 2.168 Filler panels **should** be a panel with EMC Gasketing only.

REQ 2.169 Filler panels **may** be a panel with EMC Gasketing and airflow management.

REQ 2.170 Filler panels **may** be a panel with EMC Gasketing and field-replaceable pod conversion features.

REQ 2.171 Filler panels **may** have optional Handles attached.

Figure 2-109 Example of an optional filler panel

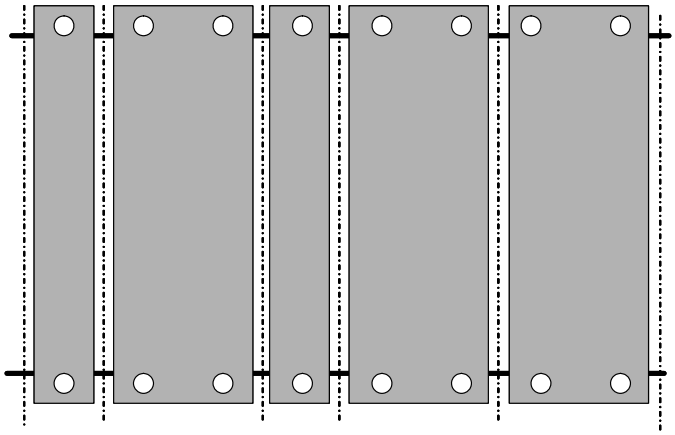

2.17 Cooling Units (CUs)

¶ 64 CUs may be of different design or configuration. See also Section 5.7, “MicroTCA system cooling configuration”.

- CUs can be designed as an integral part of a MicroTCA Shelf, Cube or Pico enclosure or separate unit.
- CUs can be of redundant or non-redundant nature.
- CUs can be designed as a FRU or component of the total MicroTCA supporting installation.
- A CU can contain single or multiple FRUs.

Property of CERN - For Internal Use Only – External Distribution Prohibited

Requirements

REQ 2.172 To reduce craft errors, CUs which are designed to function as hot swappable FRUs **should** use the latch mechanism as defined for AMC.0 Modules.

REQ 2.173 CUs which are designed to function as hot swappable FRUs, where the latch mechanism as described for AMC.0 Modules is not suitable, **may** use alternatives such as toggle switches or Push button switches.

REQ 2.174 CUs acting as FRUs **shall** comply with the LED requirements as stated in AMC.0 Module LEDs.

REQ 2.175 CUs which do not act as a MicroTCA dedicated FRU, are non-redundant, or are part of the general MTCA supporting installation **shall** provide for a red LED as defined in AMC.0 Module LED 1, at a minimum.

2.18 Subrack/Shelf/Cube/Pico performance

Requirements

REQ 2.176 The Subrack/Shelf/Cube/Pico **shall** support the weight of the AdvancedMC Modules.

REQ 2.177 The IEC 61587-1 “Performance Level SL1” criteria **shall** apply.

2.18.1 Load carrying

¶ 65 For Module weight limitations, see AMC.0 Section 2.2.

Requirements

REQ 2.178 The maximum vertical deflection of a the Shelf/Cube/Pico support member **shall** be less than 0.4 mm, as specified in Chapter 5 of IEC 61587-1, when a Shelf/Cube/Pico is fully loaded.

REQ 2.179 Shelf/Cube/Pico vendors **should** specify the maximum static weight-carrying capacities that will meet the deflection requirements in the preceding paragraph.

2.18.2 Insertion cycles

¶ 66 The insertion cycles of AdvancedMC Modules are defined in the AMC.0 specification.

Requirement

REQ 2.180 Mechanical subcomponents - latch mechanism, guide rail - **shall** support 250 insertion cycles.

2.18.3 ESD

¶ 67 The Electrostatic Discharge (ESD) interface is defined as follows: The ESD clip position in the Subrack is placed at the top, front area. The ESD clip contacts the PCB edge as the AMC.0 Module is inserted into the Subrack and provides a path for ESD energy on the PCB to be discharged into the Subrack/Shelf. See Figure 2-39 and Figure 2-40.

Property of CERN - For Internal Use Only – External Distribution Prohibited

¶ 68 Further ESD requirements, see Section 8.

Requirements

REQ 2.181 Every Shelf **shall** provide a wrist strap terminal at the front of the Shelf. See Section 2.8.5, "ESD wrist strap interface".

2.18.4 EMC

¶ 69 For initial EMC testing of an empty Shelf, Cube, or Pico, use IEC TS 61587-3 (2GHz). For EMC performance requirements of equipment, see Section 8. For EMC interfaces, see Figure 2-40 and Figure 2-41.

2.18.5 Safety

¶ 70 Safety aspects cover both human hazard and product safety and are mandatory for full compliance with the specification.

Requirements

REQ 2.182 Earth bond: Safety aspects **shall** be in accordance to IEC 60950-1.

REQ 2.183 Earth bond: In order to protect against contact with shock hazard voltages, all metallic components of the Subrack, Shelf, Cube, and Pico assembly which can be touched while in operation **shall** be electrically interconnected.

REQ 2.184 Earth bond: The resistance of the connection between the protective earthing terminal or earth contact and parts required to be earthed **shall** be less than 0.1 ohm.

2.18.6 Physical Slot and Tier numbering

¶ 71 Two different slot and Tier numbering schemes are permitted in MicroTCA, one that is consistent with AdvancedTCA, and one that is compliant with Telcordia.

Requirement

REQ 2.185 In the standard vertical module orientation, the physical numbering **shall** start in the lower left corner with increments to the upper right corner, viewed from the front.

REQ 2.186 If a physical implementation requires Modules to be oriented horizontally the Slot and Tier numbers **shall** start in the lower left corner with increments to the upper right corner.

REQ 2.187 The physical Slot number labeling **should** be at the bottom side of the Shelf, Cube, or Pico, viewed from the front in the standard orientation.

REQ 2.188 The physical Tier number labeling **should** be at the right side at the Shelf, Cube, or Pico, viewed from the front in the standard orientation.

2.18.6.1 Numbering compliant to AdvancedTCA® 3.0 Release 2.0 PICMG® base specification

¶ 72 For a physical description of the module addressing, see Section 3.

Property of CERN - For Internal Use Only – External Distribution Prohibited

Requirements

REQ 2.189 The vertical numbering is defined in Tiers. The numbering **shall** start with Tier 1 and increase by increments of one.

REQ 2.190 The horizontal numbering is defined in Slots. The numbering **shall** start with Slot 1 and increase by increments of one.

Figure 2-110 Example of numbering according to AdvancedTCA® 3.0 Release 2.0 PICMG® base specification

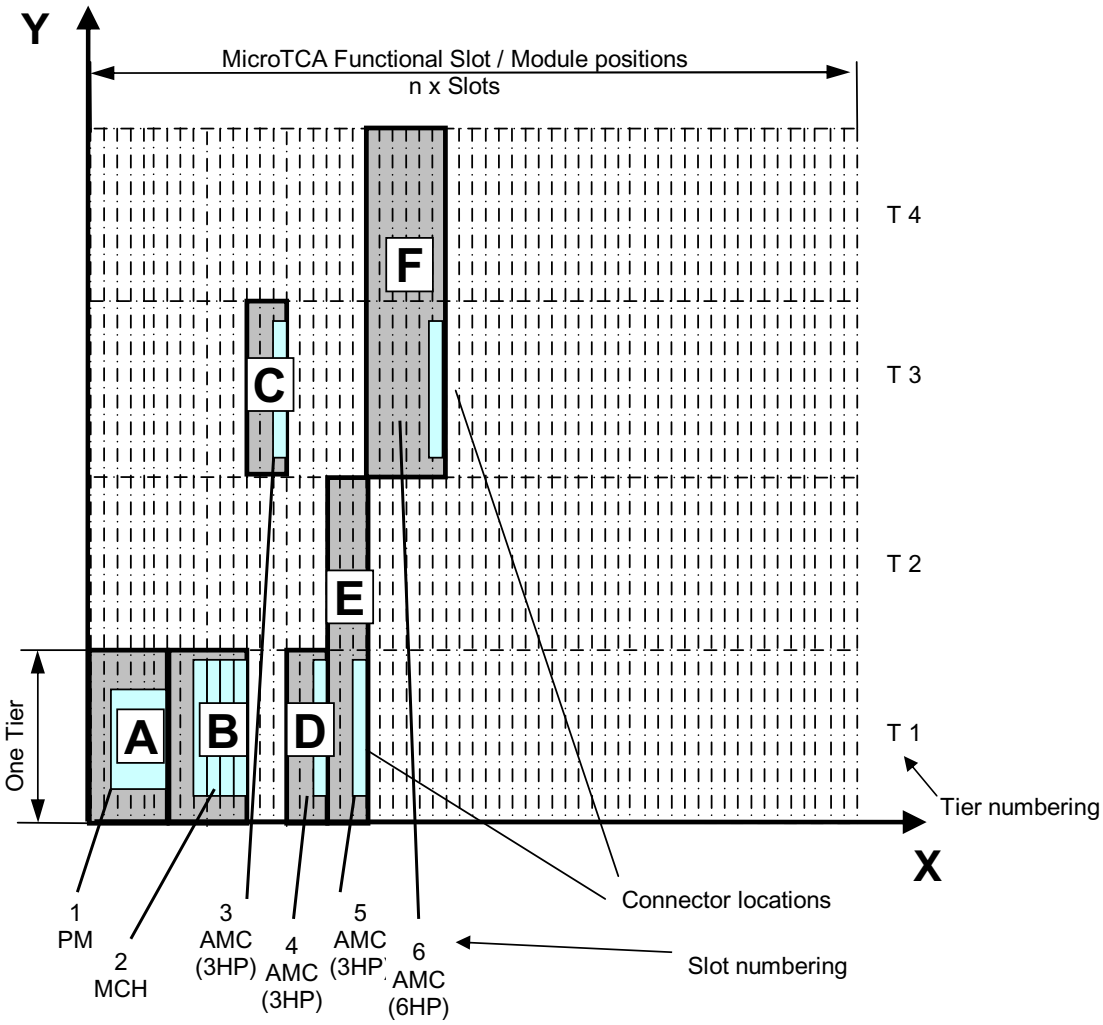

Note: * The functional Slot/Module numbers are increments for each possible module location. The Tier dimension is equivalent to the vertical slot position of a Single-Width AMC.0 Module, 75.00 mm. The Module positions are identified in the same manner as the AMC.0 Module Connectors at the Backplane (see Figure 2-110):

Module A: Position T1-1; Position Tier 1- Slot 1
Module B: Position T1-2; Position Tier 1- Slot 2
Module C: Position T3-3; Position Tier 3- Slot 3

Property of CERN - For Internal Use Only – External Distribution Prohibited

Module D: Position T1-4; Position Tier 1- Slot 4
Module E: Position T1-5; Position Tier 1 - Slot 5
Module F: Position T3-6; Position Tier 3 - Slot 6
Module G: Position T1-7; Position Tier 1 - Slot 7

2.18.6.2 Numbering compliant to Telcordia GR-2914 Requirement R3-5

¶ 73 For a physical description of the module addressing, see Section 3.

Requirements

REQ 2.191 The vertical numbering is defined in Tiers. The numbering **shall** start with Tier 0 and increase by increments of one.

REQ 2.192 The horizontal numbering is defined in Slots. The numbering **shall** start with Slot 0 and increase by increments of one.

Figure 2-111 Examples of Slot numbering according to Telcordia GR2914CO R3-5

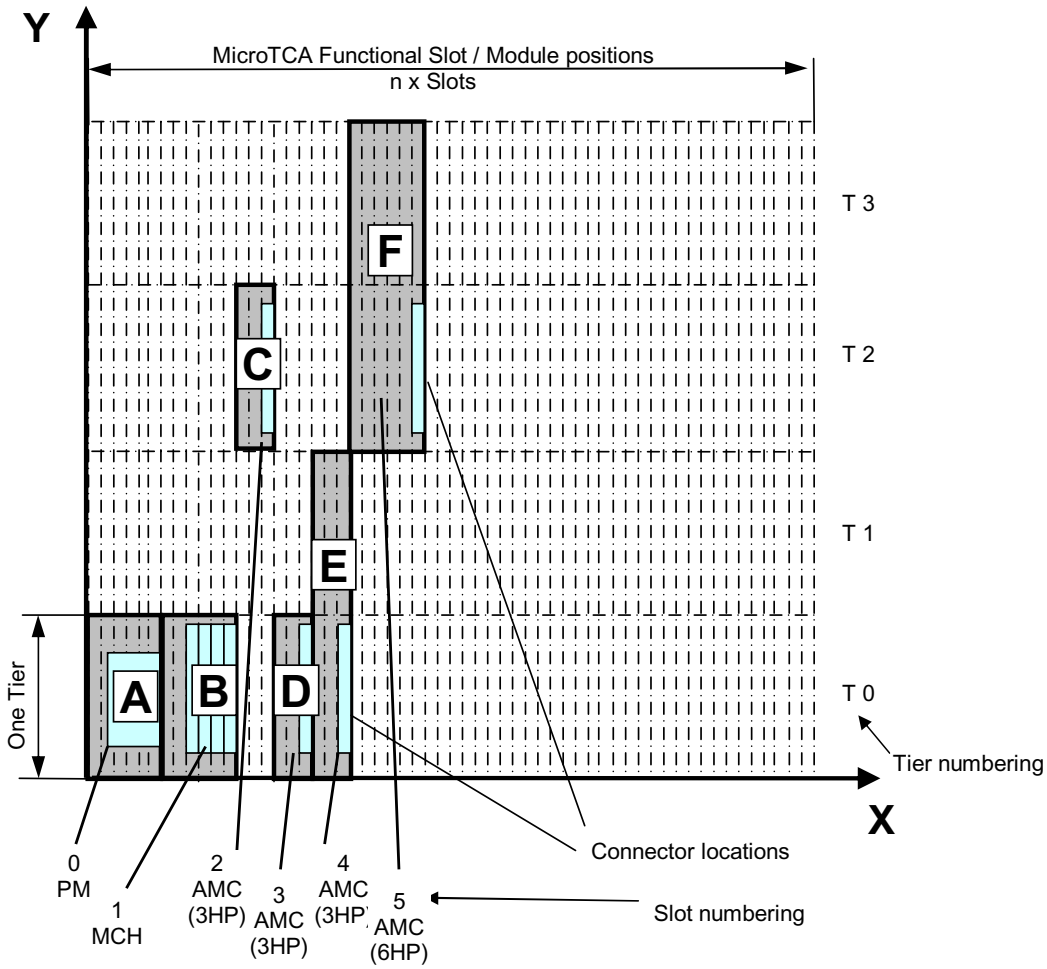

Note: * The functional Slot/Module numbers are increments for each possible module location. The Tier dimension is equivalent to the vertical slot position of a Single-Width AMC.0 Module, 75.00 mm.

Property of CERN - For Internal Use Only – External Distribution Prohibited

The Module positions are identified in the same manner as the AMC.0 Module Connectors at the Backplane (see Figure 2-111):

Module A: Position T0-0; Position Tier 0- Slot 0
Module B: Position T0-1; Position Tier 0- Slot 1
Module C: Position T2-2; Position Tier 2- Slot 2
Module D: Position T0-3; Position Tier 0- Slot 3
Module E: Position T0-4; Position Tier 0- Slot 4
Module F: Position T2-5; Position Tier 2- Slot 5
Module G: Position T0-6; Position Tier 0-Slot 6

2.19 Subrack/Shelf environmental

2.19.1 Subrack shock and vibration

Requirements

REQ 2.193 The Subrack/Shelf **shall** perform to the IEC 61587-1 “Shock and Vibration Test Conditions”.

REQ 2.194 Performance level DL1 per IEC 61587-1 **shall** apply.

2.19.2 Earthquake

Requirement

REQ 2.195 The Subrack/Shelf **shall** perform to ANSI T1E1.329 - Network Equipment-Earthquake Resistance Test.

2.19.3 Flammability

Requirements

REQ 2.196 All materials used in the construction of the Subrack/Shelf **shall** be a V-0 Class Material per IEC 60695-11-10 (refer to IEC 60950-1 1.2.12)

REQ 2.197 Foam polymers **shall** be an HF-1 Class Foamed Material per ISO 9772. (refer to IEC 60950-1 1.2.12)Climatic

Requirement

REQ 2.198 The Subrack/Shelf structure **shall** conform to IEC 61587-1 - Climatic Tests, Performance Level C2.

2.19.4 Atmospheric

Requirement

REQ 2.199 The Subrack/Shelf structure **shall** conform to IEC 61587-1 - Industrial Atmosphere Tests, Performance Level A1.vb

Property of CERN - For Internal Use Only – External Distribution Prohibited

2.19.5 Thermal

¶ 74 For thermal requirements, see Section 5.

2.19.6 Acoustic

¶ 75 For acoustic requirements, see Section 5.

2.19.7 Surface temperatures

¶ 76 For surface temperatures, see Section 5.

2.20 References

¶ 77 The following table lists applicable specifications and standards related to the mechanical concerns of MicroTCA. For further regulatory and compliance details, please refer to Section 8.

Table 2-16 Mechanical References

Specification or Standards Body	Specification or Standard	Section or Part	Description	Note
Telcordia	GR-78-CORE	R9-2	Checklist	GR =General Requirements for Central Offices (COs) (for Bellcore Client Companies)
	GR-2914-CORE	R3-5	Numbering	
ETS	ETS 300 119-4		Engineering requirements for subracks	ETS=European Telecommunication Standard
	ETS 300 119-3		Engineering requirements for racks	
ISO	ISO 1101		Drawing symbols	ISO =International Standards Organization
IEC	IEC 60297		Dimensions of mechanical structures of the 486.2mm (19“) series	IEC= International Electrotechnical Commission
	IEC 60917		Dimensions of mechanical structures (25mm practice)	
	IEC 60950-1		Safety requirements	
	IEC 61587-1		Climatic, mechanical tests and safety aspects for cabinets, racks and subracks and chassis	
	IEC 61587-3		Electromagnetic shielding performance tests for cabinets, racks and subracks	

Property of CERN - For Internal Use Only – External Distribution Prohibited

Table 2-16 Mechanical References (continued)

Specification or Standards Body	Specification or Standard	Section or Part	Description	Note
ANSI	ANSI T1E1.329		Network Equipment-Earthquake Resistance	ANS (ANSI) =American National Standard
EIA	EIA310-D	Section 1	Cabinets, Racks, Panels and Associated Equipment	EIA = Electronic Industries Association
IPC	TM-650	Test Method 2.4.22		Association connecting electronics industries

Property of CERN - For Internal Use Only – External Distribution Prohibited

Property of CERN - For Internal Use Only – External Distribution Prohibited

Hardware platform management 3

¶ 1 MicroTCA provides for extensive hardware platform management capabilities, which may be used by an overall System Manager. The management capabilities defined in this specification facilitate:

- Low-level hardware management services, based on the Intelligent Platform Management Interface (IPMI)
- High-speed management services, based on an Internet Protocol (IP) suite

3.1 Overview

¶ 2 MicroTCA hardware platform management includes Module management, MicroTCA Carrier management, and Shelf management. The AdvancedMC used in the MicroTCA Shelf is defined in the AMC.0 Advanced Mezzanine Card (AdvancedMC) specification. The MicroTCA Carrier Hub (MCH), Power Module (PM), Cooling Unit (CU) and OEM Module are defined in MicroTCA. In this section, the term Module is used to refer to a Module supported in MicroTCA, including the MCH, AdvancedMC, PM, CU and OEM Modules. While this section discusses Modules, it is not the intent of this specification to preclude a non-modular system implementation.

¶ 3 This specification leverages the management architecture and requirements defined in the AMC.0 specification to preserve AdvancedMC compatibility in a MicroTCA Shelf. This section covers MicroTCA management other than AdvancedMC management, which is defined in the AMC.0 specification. Therefore, readers of this specification are expected to be conversant with the platform management aspects described in the IPMI, AdvancedTCA, and AMC.0 specifications.

¶ 4 MicroTCA hardware platform management does not cover the implementation of the MicroTCA Shelf for different form factors. Instead, it specifies the following minimum requirements:

- AdvancedMC management, such that AMC.0 Base specification-compliant AdvancedMCs can interoperate with AdvancedTCA Carrier Boards or MicroTCA Carriers.
- MicroTCA Carrier management, which is conceptually similar to the management of an AdvancedTCA Carrier Board.
- Shelf management, which can involve one or more MicroTCA Carriers comprising a MicroTCA Shelf.

3.1.1 MicroTCA Carrier model

¶ 5 The MicroTCA Carrier leverages the AdvancedMC Carrier Board management architecture, which is defined in the AMC.0 specification. A MicroTCA Shelf consists of at least one MicroTCA Carrier. Up to sixteen MicroTCA Carriers can be grouped together to form a single MicroTCA Shelf.

Property of CERN - For Internal Use Only – External Distribution Prohibited

¶ 6 MicroTCA Carrier management functions are fulfilled by the Carrier Manager, a logical function that manages each MicroTCA Carrier, possibly with redundant instances. This specification uses Carrier Manager to refer to the MicroTCA Carrier Manager.

¶ 7 The Carrier Manager function resides with a MicroTCA Carrier Management Controller (MCMC), a physical management controller similar to an AdvancedTCA Carrier IPM Controller. The Carrier Manager and MCMC reside with Fabric switches and clock distribution on the MicroTCA Carrier Hub (MCH). A MicroTCA Carrier can be implemented with either single or redundant MCHs.

¶ 8 Additional MicroTCA Carrier architectural elements include Module Management Controllers (MMCs) present in AdvancedMCs, Enhanced Module Management Controllers (EMMCs) present in PMs, CUs and OEM Modules, Carrier FRU Information devices, management hardware interfaces, and a set of management commands.

¶ 9 The Carrier Manager, representing the entire MicroTCA Carrier, exists on only one MCH at a time, even if a redundant MCH is available. The Carrier Manager is at address 20h on IPMB-0 and IPMB-L. The MCMC only represents its MCH local sensors and is at address 10h for MCMC 1 and 12h for MCMC 2 on IPMB-0.

¶ 10 The MicroTCA Shelf Manager manages up to sixteen MicroTCA Carriers that comprise a MicroTCA Shelf. Each Carrier Manager interfaces to the Shelf Manager using a logical Shelf-Carrier Manager Interface, which can be an IP-based interface. The MicroTCA specification preserves the management hierarchy of an AdvancedTCA system through the MicroTCA Carrier model.

3.1.2 MicroTCA management architecture

¶ 11 Figure 3-1, “Management aspects of an example MicroTCA Shelf” shows the logical elements of a sample MicroTCA Shelf, with primary emphasis on management.

Property of CERN - For Internal Use Only – External Distribution Prohibited

Figure 3-1 Management aspects of an example MicroTCA Shelf

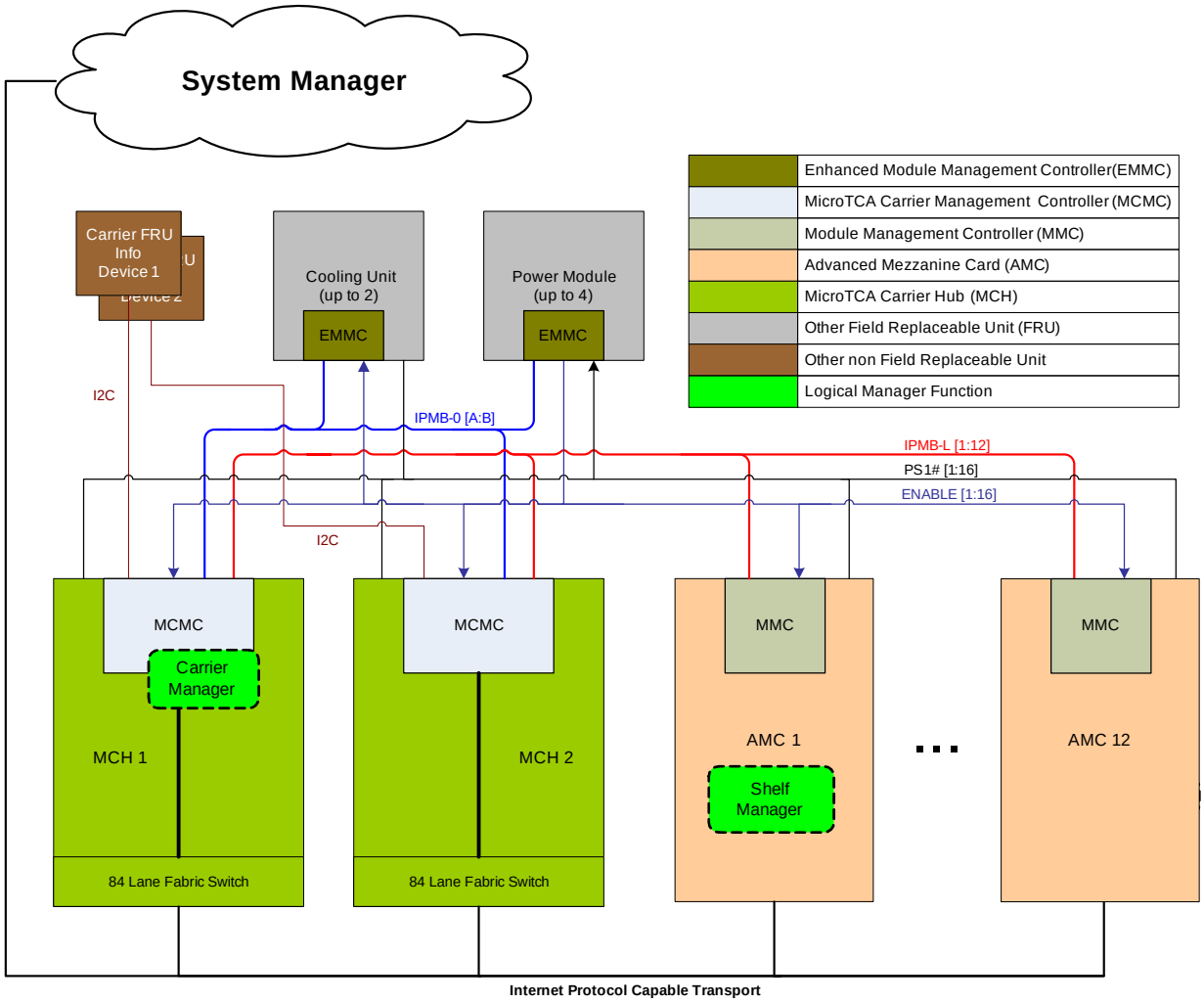

3.1.2.1 Management connections

¶ 12 The System Manager is the highest-level management entity in MicroTCA. It is responsible for managing one or more MicroTCA Shelves and possibly other Shelf types. It is a logical entity and beyond the scope of this specification. Figure 3-1 shows a System Manager external to the Shelf. In some systems (such as single Shelf systems), the System Manager can be integrated within the Shelf.

¶ 13 MicroTCA Shelves have one or more (possibly redundant) transports capable of supporting the Internet Protocol and connecting a System Manager to a Shelf Manager, MCH(s) and possibly to AdvancedMCs. These connections may be Ethernet and/or other IP-capable transport connections. Key uses of the connections are:

- Communication between a System Manager and a Shelf Manager
- Communication between a Shelf Manager and a Carrier Manager
- Support for other IP-based management services for Modules that need them

Property of CERN - For Internal Use Only – External Distribution Prohibited

¶ 14 The MicroTCA management subsystem consists of four types of management-oriented connections within the Shelf:

- Connections among the AdvancedMCs and the Carrier Manager:
  These connections are a non-redundant implementation of the Intelligent Platform Management Bus (IPMB), which is implemented in a radial topology. Following the terminology in the AdvancedMC Base specification, the IPMB from the Carrier Manager to the AdvancedMCs is called IPMB-L. Each AdvancedMC connecting to IPMB-L does so via a Module Management Controller (MMC).
- Connections among the Carrier Manager, PMs, CUs and OEM Modules:
  In MicroTCA Shelves, the PMs, OEM Modules, and CUs have EMMCs on them. Since these Modules are critical to the operation of the Shelf, the EMMCs on these Modules connect to IPMB-0. IPMB-0 is implemented as a dual redundant bus in MicroTCA and conforms to Section 3.8 of the PICMG 3.0 AdvancedTCA specification.
- Connections between each MCMC and its Carrier FRU Information device:
  The MicroTCA specification allows up to two MCHs per MicroTCA Carrier. Each MCH contains an MCMC with connectivity to a Carrier FRU Information device found in the MicroTCA Carrier. Each MCMC accesses Carrier FRU Information over a dedicated I^2C interface between the MCMC and its associated Carrier FRU Information device.
- Shelf-Carrier Manager Interface:
  This specification requires an IP-based communication interface between the Shelf Manager function and remote Carrier Managers, but allows an implementation-defined Shelf-Carrier Manager Interface where a Shelf Manager is located with a Carrier Manager.

3.1.2.2 Management components

¶ 15 The Shelf Manager is a mandatory logical management function and can be implemented on any FRU. In a MicroTCA Shelf, the Shelf Manager functions as the aggregation point for hardware management information from one or more MicroTCA Carriers. The Shelf Manager watches over managed entities such as AdvancedMCs, MCHs, PMs, CUs, and OEM Modules. It reports anomalous conditions to the System Manager and takes corrective actions where appropriate. The Shelf Manager can also provide the collective hardware health status of the MicroTCA Carriers that comprise the MicroTCA Shelf and can communicate with the telco alarms for visual/audible indications of the collective health status of the MicroTCA Shelf that it monitors.

¶ 16 In Figure 3-1, “Management aspects of an example MicroTCA Shelf”, the Shelf Manager is located on an AdvancedMC. This specification intentionally enables a wide range of implementation options for Shelf Managers. For example, the Shelf Manager can be implemented with the Carrier Manager on an MCH or any MicroTCA Carrier external hardware. Figure 3-2, “Example of multiple MicroTCA Carriers in a Shelf” shows a logical representation of a MicroTCA Shelf with multiple MicroTCA Carriers. In this example, the Shelf Manager is also located on an AdvancedMC. It is possible that redundant Shelf Managers are located across different MicroTCA Carriers that are part of the same MicroTCA Shelf.

Property of CERN - For Internal Use Only – External Distribution Prohibited

Figure 3-2 Example of multiple MicroTCA Carriers in a Shelf

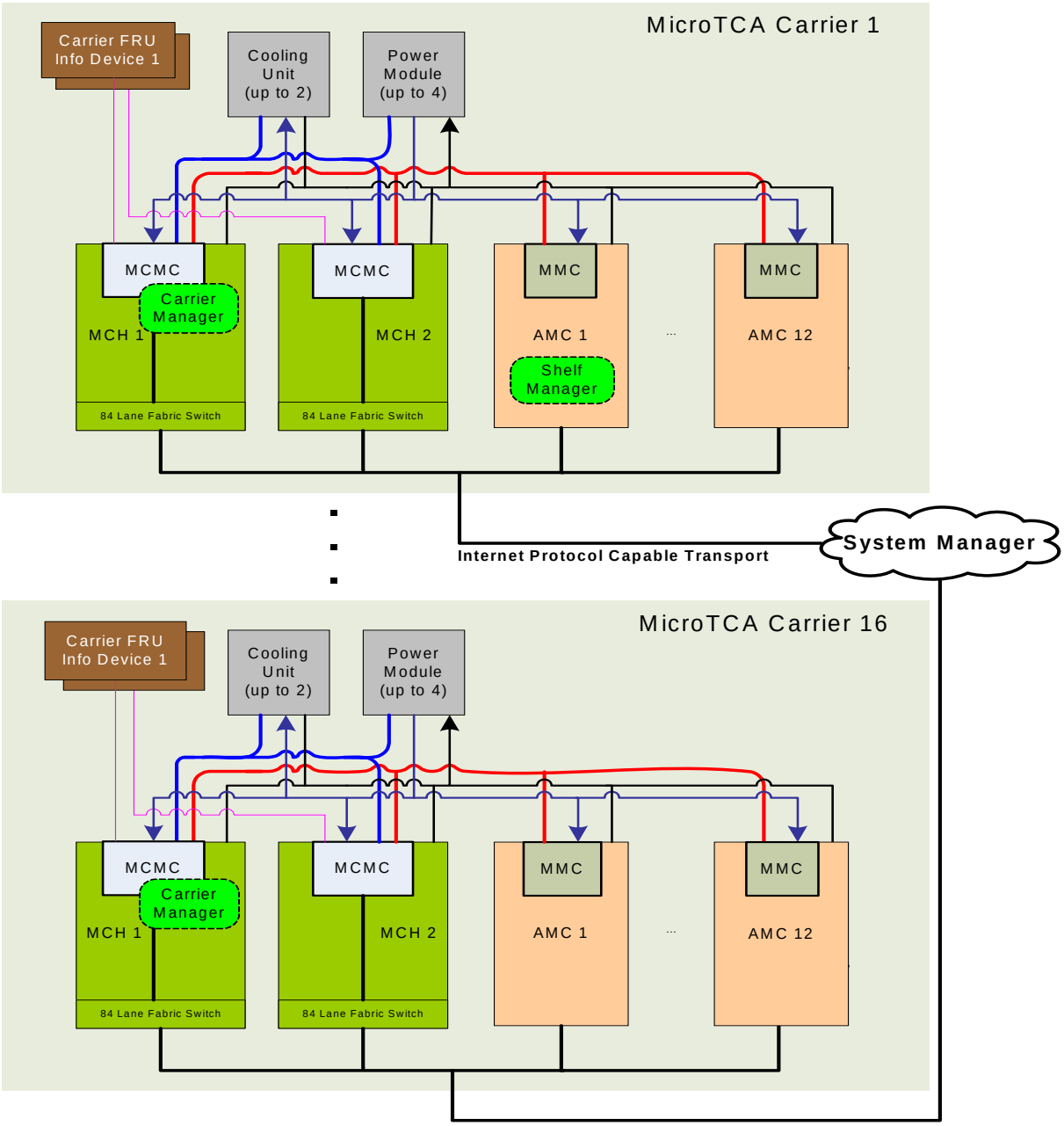

¶ 17 This specification recommends that redundant Shelf Manager instances be provided. The specification does not specify the mechanisms by which an active Shelf Manager communicates with its backup(s). The selection of the backup, coherency of redundant information, and the fail-over process are all beyond the scope of this specification.

Property of CERN - For Internal Use Only – External Distribution Prohibited

¶ 18 The MCMC is a variant of an AdvancedTCA-defined IPM Controller on the MCH and communicates with the Carrier Manager, a logical management function that provides management interfaces to managed entities within a MicroTCA Carrier. The Carrier Manager manages the AdvancedMCs, MCHs, PMs, CUs and OEM Modules, and represents these entities in a MicroTCA Carrier to the Shelf Manager.

¶ 19 Another important function of the Carrier Manager is to ensure that AdvancedMCs only enable compatible interfaces over the MicroTCA Backplane interconnects, so that incompatible devices do not harm each other or disrupt communication. This function, called Electronic Keying (E-Keying), assures compatibility of all enabled interfaces within the MicroTCA Shelf. As per the AdvancedMC Base specification, each AdvancedMC contains an MMC, whose FRU Information indicates the capabilities of each Port implemented on the AdvancedMC. Additionally, the Carrier FRU Information, which is accessible by the Carrier Manager, indicates the connectivity of the Backplane. MCMC FRU Information indicates the capabilities of the Ports implemented on the MCH. By coordinating the information from these sources, the Carrier Manager decides which Ports on each AdvancedMC or MCH Fabric to enable or disable. The Carrier Manager communicates this information to each MCH via the MCH's MCMC and to each AdvancedMC via the AdvancedMC's MMC. The AdvancedMC MMCs and MCH MCMCs ensure that only compatible interfaces are enabled.

¶ 20 Access to each MicroTCA Carrier's resources (i.e. Managed FRUs and associated sensors) is controlled by Sensor Data Records (SDRs) accessible via Carrier Manager Device SDR commands. The Shelf Manager accesses MicroTCA Carrier SDRs over the Shelf-Carrier Manager Interface. Any FRU device or sensor that is not described by an SDR is not directly known to the System Manager or Shelf Manager.

¶ 21 The Power Modules provide power to entities within a MicroTCA Carrier. Entities that draw power from PMs include AdvancedMCs, MCHs, CUs, and OEM Modules.

¶ 22 MCMCs, MMCs, EMMCs and Carrier FRU Information devices draw Management Power from PMs in the Shelf such that they are operational before any other components. The Carrier Manager controls Payload Power to the Modules in a MicroTCA Carrier with commands to the PMs, giving it the ability to shut off any Module deemed to be failing or needing to be powered off as required by the Carrier Manager, Shelf Manager, or System Manager.

¶ 23 Given the data about the MicroTCA Shelf power capability, the Carrier Manager negotiates power budgets with AdvancedMCs and other FRUs so that the MicroTCA Carrier operates within its power capacities.

¶ 24 The Shelf Manager manages the cooling of the Shelf via the Cooling Units and FRU temperature sensors. Sensors on FRUs monitor temperatures and issue event messages when temperatures go outside the prescribed bounds. In response to such events, the Shelf Manager can initiate changes in cooling levels for the Shelf.

¶ 25 The MCHs, PMs, CUs, and AdvancedMCs shown in Figure 3-1, "Management aspects of an example MicroTCA Shelf" are Field Replaceable Units (FRUs). Notice that the Carrier FRU Information device is not necessarily implemented as a distinct FRU, but is implemented directly on the MicroTCA Carrier Backplane or as removable card connected to the Backplane. In MicroTCA, all entities except the Carrier FRU Information device are implemented as Intelligent FRUs and are IPMI-capable. Each FRU that connects to either IPMB-L or IPMB-0 must be an Intelligent FRU with a management controller.

Property of CERN - For Internal Use Only – External Distribution Prohibited

¶ 26 A Carrier FRU Information device is an I^2C serial EEPROM on the MicroTCA Backplane. A Carrier FRU Information device stores the attributes of a MicroTCA Carrier, including Backplane connectivity and the power-up sequence of AdvancedMCs. The capability to store the attributes of a MicroTCA Carrier external to the MCMC, coupled with access to the Carrier FRU Information, enables a Carrier Manager to interoperate across various modular MicroTCA Carrier implementations. In a non-modular MCH, the MCMC can provide the Carrier FRU Information device in an implementation-defined manner.

3.1.3 Relationship with IPMI, AdvancedMC, and AdvancedTCA

¶ 27 The IPMI specifications define a standard, abstracted interface to the platform management system. This specification adopts the IPMI architecture, common commands, and information accessing methods via different interfaces. The management aspects of this specification are based on and inherit many aspects of the IPMI, AdvancedTCA, and AdvancedMC Base specifications. Extensions or modifications to those specifications have been made where necessary. Where differences between this document and those specifications exist, this document takes precedence.

¶ 28 This document assumes that readers have prior knowledge of the IPMI specification, Section 3, “Hardware platform management” of the AdvancedTCA Base specification, and Section 3, “Module management” of the AdvancedMC Base specification. Note that the Section 3 title of the AdvancedMC Base specification is likely to be changed to “Hardware platform management” in the next revision.

¶ 29 The following sections of the PICMG 3.0 R2.0 AdvancedTCA specification as amended by ECN 3.0-2.0-002 provide especially relevant background on IPMI conventions used in this document:

- Section 3.1.5, “Command and record definition conventions”
- Section 3.1.6, “IPMI specification clarifications”

¶ 30 Table 3-46, “Command number assignments and requirements” of this specification covers the IPMI command and function requirements of the Carrier Manager, Shelf Manager, MCMC, and EMMC. It highlights the areas of difference from the IPMI Base specification.

¶ 31 In this revision of MicroTCA.0, all references to the IPMI specification assume version 1.5, Document revision 1.1 of that specification, unless otherwise specified.

3.1.4 Key differences from PICMG 3.0 and AMC.0 specifications

¶ 32 While this specification attempts to closely follow the management capabilities defined in the PICMG 3.0 AdvancedTCA specification, the unique nature of MicroTCA concepts, scalable reliability, and cost requirements necessitate certain differences in capabilities. The following paragraphs describe some areas where specific AdvancedTCA-defined features may be impacted or extended.

¶ 33 A MicroTCA FRU can be activated by the Carrier Manager without Shelf Manager involvement. The Carrier Manager activates a FRU if so specified by the contents of the *Activation Control* field in Table 3-26, “MicroTCA Carrier Activation and Current Descriptor.” When activating a FRU, the Carrier Manager commands a PM to enable Payload Power only if the MicroTCA Carrier Power Subsystem can meet the FRU’s power requirements.

Property of CERN - For Internal Use Only – External Distribution Prohibited

¶ 34 The MicroTCA Shelf Manager does not participate in power budgeting or E-Keying. The Carrier Manager handles those responsibilities.

¶ 35 The Carrier Manager performs power budgeting in the M3 state for a given FRU, in contrast to AMC.0 where the Carrier-level power budgeting is done in the M1 state.

¶ 36 After the Carrier Manager has established the Shelf-Carrier Manager Interface with the Shelf Manager, the Shelf Manager discovers the already activated MicroTCA FRUs and synchronizes its internally tracked FRU states with the MicroTCA Carrier FRU states.

¶ 37 The MicroTCA Shelf FRU Information is specified as a logical entity and can be located in the Carrier FRU Information device. In implementations where the Shelf FRU Information is located with the Carrier FRU Information, the Shelf Manager reads the Shelf FRU Information from the Carrier Manager using FRU Device IDs 1 and 2. In a Shelf with multiple MicroTCA Carriers, the Shelf FRU Information is located and validated as part of the Shelf Manager election process. Other Shelf FRU Information location implementations are not precluded by this specification.

¶ 38 When the Shelf Manager is not located with the Carrier Manager, the Carrier Manager uses an IP-based transport interface as its Shelf-Carrier Manager Interface, instead of the IPMB-0 interface used in AdvancedTCA. The Carrier Manager establishes an RMCP session with the Shelf Manager, enabling the Shelf-Carrier Manager Interface for commands from the Shelf Manager to the Carrier Manager and event messages from the Carrier Manager to the Shelf Manager. If the Shelf Manager function is located with the Carrier Manager, the Shelf-Carrier Manager Interface is implementation-defined.

Property of CERN - For Internal Use Only – External Distribution Prohibited

3.1.5 PICMG properties and FRU Device ID assignments

¶ 39 To determine the version of this specification implemented by a management controller, the "Get PICMG Properties" command is used. Table 3-1 provides the details of each field of this command. Shelf Managers, Carrier Managers, MCMCs, and EMMCs are required to support this command. The values returned by MMCs are defined in the AdvancedMC Base specification.

Table 3-1 Get PICMG Properties command

	Byte	Data field
Request data	1	*PICMG Identifier.* Indicates that this is a PICMG-defined group extension command. A value of 00h **shall** be used.
Response data	1	*Completion Code.*
	2	*PICMG Identifier.* Indicates that this is a PICMG-defined group extension command. A value of 00h **shall** be used.
	3	*PICMG Extension Version.* Indicates the version of PICMG extensions implemented by the management controller. [7:4] = BCD encoded minor version [3:0] = BCD encoded major version This specification defines version 5.0 of the PICMG extensions. The Shelf Manager, Carrier Manager, MCMC, and EMMC implementing the extensions as defined by this specification report a value of 05h. The value 00h is reserved. The value returned by MMCs is defined in AdvancedMC Base specification.
	4	*Max FRU Device ID.* The numerically largest FRU Device ID for the Managed FRUs implemented by the Shelf Manager, Carrier Manager, MCMC, or EMMC, excluding FRU Device IDs at the top of the range for special purposes, as detailed in Table 3-2, "Special FRU Device IDs." MCMCs and EMMCs **shall** report 0.
	5	*FRU Device ID.* MCMCs, and EMMCs **shall** report 0.

¶ 40 MicroTCA defines FRU Device IDs that have a special usage. Table 3-2 describes the special FRU Device IDs and how they are used.

¶ 41 Special FRU Device ID 253 is reserved by MicroTCA for accessing the logical Carrier FRU Information. This FRU Device ID does not represent a Managed FRU. Refer to Section 3.2.4.2, "Accessing Carrier FRU Information" for additional details.

Table 3-2 Special FRU Device IDs

FRU Device ID	Usage
253	Defined by the MicroTCA specification to access the logical Carrier FRU Information from a Carrier Manager.
254	Defined by the AdvancedTCA specification. Refer to Section 3.2.3.3 of the AdvancedTCA specification for additional details. In this specification, it is used to access the logical MicroTCA Shelf FRU Information from a Shelf Manager.
255	Reserved by the IPMI specification.

Property of CERN - For Internal Use Only – External Distribution Prohibited

¶ 42 Table 3-3 lists the FRU Device ID range used when accessing the Carrier Manager. The FRU Device IDs not assigned in this specification are reserved for future use.

Table 3-3 Carrier Manager FRU Device IDs

Device	Carrier Manager FRU Device ID
Carrier Manager	0
Physical Shelf FRU Info 1	1
Physical Shelf FRU Info 2	2
MCMC 1	3
MCMC 2	4
AdvancedMCs	5 - 39
CUs	40 - 49
PMs	50 - 59
OEM Modules	60 - 78
Telco Alarm Function	79
Implementation defined	80 - 89
Reserved	90 - 252
Logical Carrier FRU Info	253
Reserved	254
Reserved by the IPMI specification	255

Requirements

REQ 3.1 Reserved FRU Device IDs **shall not** represent Managed FRUs.

REQ 3.2 Carrier Managers **shall not** support reserved FRU Device IDs as parameters to any commands.

REQ 3.3 Each EMMC, MCMC, Shelf Manager, and Carrier Manager **shall** implement the "Get PICMG Properties" command as defined in Table 3-1, "Get PICMG Properties command."

REQ 3.4 In response to the "Get PICMG Properties" command, each MCMC, EMMC, Shelf Manager, and Carrier Manager **shall** report a *PICMG Extension Version* value of 05h.

REQ 3.5 Each MCMC **shall** use FRU Device ID 0 for its MCH FRU.

REQ 3.6 Each MCMC **shall** use FRU Device ID 1 for its Shelf FRU Information if present in its Carrier FRU Information device.

REQ 3.7 Each MCMC **shall** use FRU Device ID 2 for its Carrier FRU Information.

REQ 3.8 If the Carrier Manager provides FRU Information via FRU Device ID 0, it **shall** represent only the Carrier Manager and **shall not** represent any MCMC.

REQ 3.9 Carrier Managers **shall** use FRU Device ID 1 for physical Shelf FRU Information 1, if present in Carrier FRU Information device 1.

REQ 3.10 Carrier Managers **shall** use FRU Device ID 2 for physical Shelf FRU Information 2, if present in Carrier FRU Information device 2.

REQ 3.11 If the Shelf FRU Information is not present in the Carrier FRU Information device the Carrier Manager **shall** return a Completion Code of "Requested Sensor, data, or record

Property of CERN - For Internal Use Only – External Distribution Prohibited

not present (CBh)" to commands attempting to access Shelf FRU Information using FRU Device IDs 1 or 2.

REQ 3.12 Carrier Managers **shall** use FRU Device ID 3 for MCMC 1.

REQ 3.13 Carrier Managers **shall** use FRU Device ID 4 for MCMC 2.

REQ 3.14 Carrier Managers **shall** use a FRU Device ID as defined in Table 3-5, "AdvancedMC addressing" for each AdvancedMC, based on Site Number.

REQ 3.15 Carrier Managers **shall** use a FRU Device ID as defined in Table 3-7, "Power Module and Cooling Unit addressing" for each PM and CU, based on Site Type and Site Number.

REQ 3.16 Carrier Manager FRU Device IDs for OEM Modules in a MicroTCA Carrier **shall** begin with 60 and range to 78, and **shall** be based on the *Site Type*, *Site Number* and *FRU Device ID* fields in the OEM Module description record defined in Table 3-8.

REQ 3.17 Carrier Managers **shall** use FRU Device ID 253 to provide the logical Carrier FRU Information in response to "Get FRU Inventory Data", "Read FRU Data" and "Write FRU Data" commands.

REQ 3.18 Carrier Managers **shall not** support FRU Device ID 253 as a parameter to any IPMI commands, except for the "Get FRU Inventory Data", "Read FRU Data" and "Write FRU Data" commands.

3.2 Management-related interconnects

¶ 43 As described in Section 3.1.2, "MicroTCA management architecture", a MicroTCA Carrier implements different management interconnects to FRUs and non-FRUs in the MicroTCA Carrier. This section details that management-oriented connectivity.

3.2.1 AdvancedMC interconnects

¶ 44 Section 3.2 of the AdvancedMC Base specification describes the management-related connectivity between an AdvancedMC Bay and an AdvancedTCA Carrier Board. In MicroTCA, the MicroTCA Carrier provides the same connectivity to an AdvancedMC Slot.

¶ 45 An MCMC provides a non-redundant IPMB interface between the MCMC and the AdvancedMC MMCs. This IPMB interface is called IPMB-L and is implemented in a radial topology. IPMB-L is implemented only between MMCs and the MCMC(s); no other devices are connected to this bus.

¶ 46 Carrier Managers enable the IPMB-L isolators to a present AdvancedMC only after Management Power is enabled.

Property of CERN - For Internal Use Only – External Distribution Prohibited

¶ 47 Table 3-4 lists the signals that are implemented for management-specific connectivity to AdvancedMCs.

Table 3-4 AdvancedMC-specific management-related signals

Signal name	Input/ Output/ Ground	Description
IPMB-L [1:12]	Input/Output	Radial IPMB-L interface, one IPMB-L from the MCMC(s) to each AdvancedMC in the MicroTCA Carrier.
ENABLE# [1:12]	Output	One ENABLE# signal from all PM(s) to each AdvancedMC in the MicroTCA Carrier. When deasserted, puts the AdvancedMC MMC into reset.
PS1# [1:12]	Input	One PS1# signal from each AdvancedMC in the MicroTCA Carrier, routed to all PM(s). Assertion of this signal indicates the physical presence of the AdvancedMC.

¶ 48 While the AdvancedMC Base specification allows for up to eight AdvancedMCs on an AdvancedTCA Carrier Board, the MicroTCA specification allows for up to twelve AdvancedMCs in a MicroTCA Carrier. Table 3-5 shows the valid combinations of GA lines and the associated IPMB-L addresses for AdvancedMCs in a MicroTCA Carrier.

Table 3-5 AdvancedMC addressing

GA[2:0]	IPMB-L address	MicroTCA Carrier Local Address		Carrier Manager FRU Device ID
		Site Number	Site Type	
GGG	70h	N/A	N/A	N/A
GGU	72h	1	AdvancedMC (07h)	5
GUG	74h	2	AdvancedMC (07h)	6
GUU	76h	3	AdvancedMC (07h)	7
UGG	78h	4	AdvancedMC (07h)	8
UGU	7Ah	5	AdvancedMC (07h)	9
UUG	7Ch	6	AdvancedMC (07h)	10
UUP	7Eh	7	AdvancedMC (07h)	11
UPU	80h	8	AdvancedMC (07h)	12
UPP	82h	9	AdvancedMC (07h)	13
PUU	84h	10	AdvancedMC (07h)	14
PUP	86h	11	AdvancedMC (07h)	15
PPU	88h	12	AdvancedMC (07h)	16

Requirements

REQ 3.19 MicroTCA Carriers **shall** provide Geographic Addresses for AdvancedMCs in the MicroTCA Carrier, as shown in Table 3-5.

REQ 3.20 Site Numbers for AdvancedMCs (Site Type 07h) in a MicroTCA Carrier **shall** start with 1.

Property of CERN - For Internal Use Only – External Distribution Prohibited

3.2.2 Power Module and Cooling Unit interconnects

¶ 49 Power Modules and Cooling Units implement the same management-specific interconnects as AdvancedMCs, with the exception of IPMB-L. PMs and CUs use an Enhanced MMC (EMMC) that implements IPMB-0.

¶ 50 IPMB-0 is a redundant IPMB interface connecting the MCMC(s) and the EMMCs. The two IPMBs in IPMB-0 are referred to as IPMB-A and IPMB-B. They are connected on a bused basis.

¶ 51 Table 3-6 lists the signals that are implemented for management-specific connectivity to Power Modules and Cooling Unit EMMCs.

Table 3-6 EMMC management-related signals

Signal name	Input/ Output/ Ground	Description
IPMB-0	Input/Output	Dual bused IPMB, connecting MCMC(s) and EMMCs within a MicroTCA Carrier.
ENABLE# [1:2]	Output	One ENABLE# signal from all PM(s) to each CU in the MicroTCA Carrier. When deasserted, puts the EMMC into reset.
PS1# [1:2]	Input	One PS1# signal from each CU in the MicroTCA Carrier, routed to all PM(s). Assertion of this signal indicates the physical presence of the CU.

¶ 52 Power Modules and Cooling Units have EMMCs that communicate with the Carrier Manager over IPMB-0. IPMB-0 addresses of CUs and PMs can be calculated in a similar way as for AdvancedMCs:

- (C0h + Site Number x 2) for PMs
- (A6h + Site Number x 2) for CUs

¶ 53 Table 3-7 shows the combinations of GA lines and the associated IPMB-0 addresses for PMs and CUs in a MicroTCA Carrier.

Table 3-7 Power Module and Cooling Unit addressing

GA[2:0]	IPMB-0 address	MicroTCA Carrier Local Address		Carrier Manager FRU Device ID
		Site Number	Site Type	
GGU	A8h	1	Cooling Unit (04h)	40
GUG	AAh	2	Cooling Unit (04h)	41
GGU	C2h	1	Power Module (0Bh)	50
GUG	C4h	2	Power Module (0Bh)	51
GUU	C6h	3	Power Module (0Bh)	52
UGG	C8h	4	Power Module (0Bh)	53

Requirements

REQ 3.21 MicroTCA Carriers **shall** provide Geographic Addresses for PMs and CUs in the MicroTCA Carrier, as shown in Table 3-7, “Power Module and Cooling Unit addressing.”

Property of CERN - For Internal Use Only – External Distribution Prohibited

REQ 3.22 Each PM and CU EMMC **shall** use an IPMB-0 address based on its Geographic Address inputs defined in Table 3-7.

REQ 3.23 Site Numbers for Cooling Units (Site Type 04h) in a MicroTCA Carrier **shall** begin with 1.

REQ 3.24 Site Numbers for Power Modules (Site Type 0Bh) in a MicroTCA Carrier **shall** begin with 1.

3.2.3 Guidelines for OEM Module interconnects and management

¶ 54 A MicroTCA Carrier can include non-standard OEM Module(s). If implemented, such Modules and MicroTCA Carriers follow the guidelines provided in this subsection.

¶ 55 Carrier Manager FRU Device IDs for OEM Modules range from 60-78, and have a fixed one to one relationship with OEM Module IPMB-0 addresses, which range from 42h-66h. OEM Module IPMB-0 addresses are calculated using (42h + ((FRU Device ID - 60) *2)).

¶ 56 OEM Module Site Types are implementation-defined within the range from C0h-CFh. Site Numbers distinguish OEM Modules of the same Site Type and are numbered starting at 1.

Requirements

REQ 3.25 Each OEM Module **shall** include an EMMC.

REQ 3.26 If an OEM Module is independently hot swappable, the OEM Module **shall** implement the PS1# and ENABLE# signals in an implementation-defined interconnect in a MicroTCA Carrier.

REQ 3.27 If an OEM Module is independently hot swappable, the OEM Module and its EMMC **shall** comply with all the Module requirements, including but not limited to the sub-sections “BLUE LED”, “Module Handle”, and “Module Hot Swap Sensor”, as specified in Section 3, “Module management” of the AdvancedMC Base specification, except as specified in this specification.

REQ 3.28 OEM Module EMMC Entity IDs **shall** be assigned from the range D0h–DFh, as defined by the IPMI specification, for all device SDRs.

REQ 3.29 OEM Module Site Types **shall** fall within the range C0h-CFh and are implementation-defined.

REQ 3.30 OEM Module Site Numbers **shall** begin with 1 for each implemented Site Type.

REQ 3.31 OEM Module EMMC IPMB-0 addresses **shall** range from 42h to 66h and **shall** be based on the Carrier Manager FRU Device IDs for OEM Modules according to the formula (42h + ((FRU Device ID - 60) *2)).

¶ 57 MicroTCA Carriers that implement OEM Module(s) contain an OEM Module description record in the Carrier FRU Information, as defined in Table 3-8. Carrier Manager handling of OEM Modules is implementation-defined and is largely outside of the scope of this specification.

Property of CERN - For Internal Use Only – External Distribution Prohibited

Table 3-8 OEM Module description record

Offset	Length	Definition
0	1	*Record Type ID*. For all records defined in this specification a value of C0h (OEM) **shall** be used.
1	1	*End of List/Version*. 7:7 – End of List. Set to one for the last record. 6:4 – Reserved. Write as 0. 3:0 – Record format version. Set to 2h for this definition.
2	1	*Record Length*.
3	1	*Record Checksum*.
4	1	*Header Checksum*.
5	3	*Manufacturer ID*. LS byte first. Write as the three byte ID assigned to PICMG. For this specification, the value 12634 (00315Ah) **shall** be used.
8	1	*PICMG Record ID*. For the OEM Module description record, the value 29h **shall** be used.
9	1	*Record Format Version*. For this specification, the value 00h **shall** be used.
10	3	*OEM Manufacturer ID*. LS byte first. The three byte ID assigned to the OEM Module manufacturer.
13	1	*Site Type*. The value in this field is in the range of Site Types for OEM Modules as defined in Table 3-14, "Site Type values."
14	1	*Site Number*. This field holds the Site Number of the OEM Module.
15	1	*FRU Device ID*. This field holds the Carrier Manager FRU Device ID of the OEM Module.

Requirement

REQ 3.32 If an OEM Module is implemented in a MicroTCA Carrier, the Carrier FRU Information **shall** contain an OEM Module description record, as described in Table 3-8, "OEM Module description record."

3.2.4 Carrier FRU Information device requirements

¶ 58 MicroTCA Shelves allow for one Carrier FRU Information device per MCMC on the MicroTCA Carrier Backplane in a modular implementation, accessible via a dedicated I^2C bus. A non-modular system, such as a Pico system, is free to implement the Carrier FRU Information device function another way.

¶ 59 Table 3-9 lists the management-related signals that the MCMC implements to access the Carrier FRU Information device on the MicroTCA Carrier Backplane.

Table 3-9 Carrier FRU Information device signals

Signal name	Input/Output	Description
I2C_SDA/ I2C_SCL	Input/Output	One set of dedicated I^2C bus (data and clock signals) per MCMC to its associated Carrier FRU Information device: - MCMC 1 gets dedicated I^2C bus access to device 1. - MCMC 2 gets dedicated I^2C bus access to device 2.

Property of CERN - For Internal Use Only – External Distribution Prohibited

¶ 60 In MicroTCA, the Carrier FRU Information device provides persistent storage of attributes of the MicroTCA Carrier implementation. These attributes include the power-up sequence of AdvancedMCs, maximum current that can be routed to particular AdvancedMC Slots, Fabric connectivity and other information. To permit modular MCH interoperability across multiple MicroTCA Carrier types, the Carrier FRU Information is stored external to the MCH, but within a modular MicroTCA Carrier.

Requirements

REQ 3.33 I^2C serial EEPROMs selected as the Carrier FRU Information device **shall** conform to the I^2C specification.

REQ 3.34 The size of the I^2C serial EEPROM used as the Carrier FRU Information device **shall** be between 32K bits and 512K bits.

REQ 3.35 Each Carrier FRU Information device I^2C serial EEPROM **shall** have A4h as its base address and **shall** implement a data access protocol that is equivalent to the Atmel AT24C32A family of devices.

REQ 3.36 A non-modular MCH and MicroTCA Carrier **may** implement a Carrier FRU Information device that does not meet the requirements above.

REQ 3.37 Carrier FRU Information device I^2C serial EEPROMs **shall** support 100 KHz mode.

3.2.4.1 Carrier FRU Information device validation

¶ 61 Once the Carrier FRU Information device is found, it is checked for validity. The Carrier FRU Information device may be a freshly inserted non-volatile memory, or it may have become corrupted. First, the Carrier FRU Information device's checksums are checked. When redundant MCHs are present in the MicroTCA Carrier, the MCMC communicates the validity status of the Carrier FRU Information devices with the other MCMC. Based on comparison of the validity status, the MCMCs can negotiate which MCMC becomes the Carrier Manager. The communication of the MCMC status between MCMCs and the election mechanism for the Carrier Manager are implementation defined.

Requirements

REQ 3.38 If Carrier FRU Information has an invalid common header (e.g., all FFhs or an invalid checksum), each MCMC **shall** treat it as invalid.

REQ 3.39 Each MCMC **shall** consider its Carrier FRU Information invalid until it has completed a checksum check of its entire Carrier FRU Information data, by reading through its Carrier FRU Information device contents and validating each area pointed to by the common header.

REQ 3.40 If its Carrier FRU Information is invalid, an MCH **shall not** attempt to perform the Carrier Manager function.

REQ 3.41 MCMCs **shall** provide support for updating the Carrier FRU Information according to Section 3.2.4.3, "Updating Carrier FRU Information."

3.2.4.2 Accessing Carrier FRU Information

¶ 62 Once the Carrier FRU Information device has been validated, the Carrier Manager makes the records available to other management controllers, including the Shelf Manager, using the special FRU Device ID 253. Carrier Managers accept FRU Device ID 253 as a parameter to "Get FRU Inventory Data", "Read FRU Data" and "Write FRU Data" commands to provide

Property of CERN - For Internal Use Only – External Distribution Prohibited

access to an aggregated view of the Carrier FRU Information, merged from the two Carrier FRU Information devices. Carrier Managers do not accept FRU Device ID 253 as a parameter to any other commands.

¶ 63 The special FRU Device ID 253 is only used to access Carrier FRU Information similar to how FRU Device ID 254 is defined in the AdvancedTCA specification to access the Shelf FRU Information. Carrier Managers do not provide a type 11h SDR for FRU Device ID 253, as this FRU is not a Managed FRU.

Requirement

REQ 3.42 In response to the "Write FRU Data" command to FRU Device ID 253, a Carrier Manager in a MicroTCA Carrier with redundant MCHs **shall** propagate the written data to both Carrier FRU Information devices.

3.2.4.3 Updating Carrier FRU Information

¶ 64 Typically, the Carrier FRU Information does not need to be updated. When the Carrier FRU Information contents need to be updated due to corruption or change in an attribute in the Carrier FRU Information, the Shelf Manager or the tools/utilities provided by the MicroTCA Carrier implementation are used to write the Carrier FRU Information. Since there can be redundant Carrier FRU Information devices in a MicroTCA Carrier, it is required to keep the same information in both devices.

Requirements

REQ 3.43 MCMCs **should** implement a low-level mechanism to provide update or recovery of the Carrier FRU Information data.

REQ 3.44 MicroTCA Carriers **shall** provide a mechanism to update the Carrier FRU Information to ensure that it has the correct contents for the MicroTCA Carrier.

REQ 3.45 The Carrier FRU Information update function **shall** ensure that both Carrier FRU Information devices have matching content in a MicroTCA Carrier with redundant MCMCs.

Property of CERN - For Internal Use Only – External Distribution Prohibited

3.2.4.4 FRU Information Partition record

¶ 65 A physical FRU Information device can be partitioned into multiple logical FRU Information devices. The typical use of multiple partitions is to support Shelf FRU Information within the physical Carrier FRU Information device. The FRU Information Partition record describes how the physical FRU Information device is partitioned. The format of the FRU Information Partition record data is shown in Table 3-10.

Table 3-10 FRU Information Partition record

Offset	Length	Definition
0	1	*Record Type ID*. For all records defined in this specification a value of C0h (OEM) **shall** be used.
1	1	*End of List/Version*. 7:7 – End of List. Set to one for the last record. 6:4 – Reserved. Write as 0. 3:0 – Record format version. Set to 2h for this definition.
2	1	*Record Length*.
3	1	*Record Checksum*.
4	1	*Header Checksum*.
5	3	*Manufacturer ID*. LS byte first. Write as the three byte ID assigned to PICMG. For this specification, the value 12634 (00315Ah) **shall** be used.
8	1	*PICMG Record ID*. For the FRU Information Partition record, the value 20h **shall** be used.
9	1	*Record Format Version*. For this specification, the value 00h **shall** be used.
10	1	*Partition Descriptor Count*. This contains a count of the number of entries (M) in the FRU Information Partition record.
11	M*4	*Partition Descriptors*. This is an array of partition descriptors for each partition within the physical FRU Information device described in Table 3-11.

Table 3-11 Partition descriptor

Offset	Length	Definition
0	2	*Partition Offset*. LS byte first. This contains the offset within the physical FRU Information device of the partition divided by 10h.
2	2	*Partition Length*. LS byte first. This contains the length of the partition.

Requirements

REQ 3.46 The *Partition Offset* field **shall** contain the physical offset, divided by 10h, within the physical FRU Information device of the first byte of the common header for the corresponding logical FRU Information device that the partition represents.

REQ 3.47 The *Partition Length* field **shall** contain the physical length in bytes of the corresponding partition.

REQ 3.48 When the Get FRU Inventory Area Info command is used to access information about a FRU Information partition, the *Partition Length* **shall** be returned for the FRU inventory area size.

REQ 3.49 Carrier FRU Information **shall** be physically located at the offset 0 within the physical Carrier FRU Information device.

Property of CERN - For Internal Use Only – External Distribution Prohibited

REQ 3.50 Carrier FRU Information **shall** contain a FRU Information Partition record.

REQ 3.51 The first partition specified in the FRU Information Partition record within the Carrier FRU Information **shall** describe the Carrier FRU Information partition. This **may** be the only partition.

REQ 3.52 The Carrier FRU Information partition **shall** have a *Partition Offset* of 0.

REQ 3.53 If the Shelf FRU Information is present in the physical Carrier FRU Information device, the second partition specified **shall** be the Shelf FRU Information partition.

3.2.5 MicroTCA Carrier interconnects

¶ 66 As described in Section 3.1.1, "MicroTCA Carrier model", the MicroTCA Carrier provides management-oriented interconnects among managed entities within the MicroTCA Carrier. This includes the connectivity between the MCH(s) and the AdvancedMC(s), PM(s), CU(s), and Carrier FRU Information device(s).

Requirements

REQ 3.54 MicroTCA Carriers **shall** connect IPMB-L between the MCH(s) and AdvancedMC Slots in their MicroTCA Carrier.

REQ 3.55 MicroTCA Carriers **shall** connect IPMB-L in a radial topology, with the MCH(s) acting as the hubs of the radial topology. The radial segments **shall** be dedicated logical buses or buffered by I^2C isolators.

REQ 3.56 The maximum capacitance on each IPMB-L signal (SCL_L and SDA_L) **shall** be 222 pF, including contributions from MicroTCA Backplane traces, vias, ICs, pull-up resistors, MCH isolators, connection pads for the Connector pins, the AMC Connector, and the connected 22 pF for each implemented AdvancedMC Slot. This maximum capacitance is allocated as follows: the MicroTCA Carrier's Backplane traces, vias, connection pads for the Connector pins, and the AMC Connector **shall** be no more than 120 pF; each MCH's ICs, pull-up resistors, isolators, traces, vias, connection pads and Connector **shall** be no more than 40 pF.

REQ 3.57 MicroTCA Carriers **shall** connect IPMB-A and IPMB-B (i.e. a connection to IPMB-0), between the MCH(s), PMs, CUs, and OEM Modules implemented in their MicroTCA Carrier.

REQ 3.58 Each Cooling Unit **shall** be connected to IPMB-0 and PMs of only one MicroTCA Carrier, even if it cools multiple MicroTCA Carriers.

REQ 3.59 MicroTCA Carriers **shall** connect IPMB-0 in a bused topology.

REQ 3.60 Non-intelligent FRUs **shall not** be connected to IPMB-A, IPMB-B, or IPMB-L.

REQ 3.61 Intelligent FRUs connecting to IPMB-L or IPMB-0 **shall** do so in a single MicroTCA Carrier.

REQ 3.62 MicroTCA Carriers **shall** connect the ENABLE# and PS1# signals from all the PM(s) to each MCH, AdvancedMC, CU and OEM Modules in their MicroTCA Carrier.

REQ 3.63 Each MicroTCA Carrier with a modular MCH **shall** connect each MCMC to its associated Carrier FRU Information device over a dedicated I^2C bus. Other Intelligent FRUs **shall not** be connected on this I^2C bus. Each MicroTCA Carrier with redundant (two) modular MCHs **shall** provide each MCMC with a dedicated I^2C bus connection to its Carrier FRU Information device.

Property of CERN - For Internal Use Only – External Distribution Prohibited

REQ 3.64 Each MicroTCA Carrier with a modular MCH **shall** provide one Carrier FRU Information device per MCH Slot in the MicroTCA Carrier. Each MicroTCA Carrier can have a maximum of two MCH Slots.

REQ 3.65 When a MicroTCA Carrier provides redundant Carrier FRU Information devices, both Carrier FRU Information devices **shall** be of the same storage capacity.

REQ 3.66 Each MicroTCA Carrier with a modular MCH **shall** implement Carrier FRU Information device addressing as defined in Section 3.2.4, "Carrier FRU Information device requirements."

REQ 3.67 MicroTCA Carriers **shall** implement Geographic Addresses for each AdvancedMC, PM, and CU using the GA[2:0] signals, as defined in Table 3-5, "AdvancedMC addressing" and Table 3-7, "Power Module and Cooling Unit addressing."

REQ 3.68 For encoding of the GA[2:0] signals, pins marked as G **shall** be tied to the Ground, pins marked as U **shall** be not connected on the Backplane, and pins marked as P **shall** connect to Management Power (MP).

REQ 3.69 MicroTCA Carriers **shall** connect PS0# for each Module in each MicroTCA Carrier to Logic Ground on the Backplane.

3.3 Carrier Manager

¶ 67 This specification uses Carrier Manager to refer to the MicroTCA Carrier Manager. The Carrier Manager function resides on the MCH, possibly on the MCMC. The Carrier Manager communicates on IPMB-L and IPMB-0 through the MCMC. The Carrier Manager also controls isolators for each IPMB-L connection to MMCs and the connection to IPMB-0.

¶ 68 The Carrier Manager manages and controls the AdvancedMCs, Power Modules, Cooling Units and OEM Modules in its MicroTCA Carrier through a set of signals controlled by the Power Modules together with its IPMB interfaces.

Requirements

REQ 3.70 Except as noted below, each MicroTCA Carrier Manager **shall** meet all IPM Controller and FRU requirements in Section 3.2.4 "Managed FRU operational state management" in the AdvancedTCA specification including its subsections. Each Carrier Manager represents all the FRUs in a MicroTCA Carrier. From the point of view of these requirements, it is not relevant that the FRUs have management controllers. For instance, each Carrier Manager implements Hot Swap state machines and FRU Hot Swap Sensors for all those FRUs.

REQ 3.71 As an exception to REQ 3.70, power negotiation and E-Keying **shall** be the responsibility of Carrier Managers.

REQ 3.72 As an exception to REQ 3.70, FRU activation and deactivation **shall** be the responsibility of each Carrier Manager, Shelf Manager or the System Manager, depending on the *Activation Control* and *Deactivation Control* fields, respectively, of the MicroTCA Carrier Activation and Power Management record.

REQ 3.73 As an exception to REQ 3.70, the hardware components providing the Carrier Manager function **should** include a watchdog function.

REQ 3.74 Carrier Managers **shall** meet the Carrier Hot Swap requirements in AMC.0 Section 3.6.6 "Module Hot Swap sensor" except for power management which **shall** be implemented as specified in Section 3.8.4, "Normal power management".

Property of CERN - For Internal Use Only – External Distribution Prohibited

REQ 3.75 Carrier Managers **shall** only enable IPMB-L isolators and pull-up power for an AdvancedMC Slot when an AdvancedMC is present, and Management Power is enabled and good.

REQ 3.76 If communication errors on IPMB-L are detected and isolation is required, Carrier Managers **shall** isolate the errant Module Management Controller (MMC) and transition the AdvancedMC to communication lost state M7.

REQ 3.77 On re-enabling IPMB-L to an AdvancedMC, if communication is restored, Carrier Managers **shall** transition the AdvancedMC back to a known state as communication is regained.

REQ 3.78 Carrier Managers **shall not** allow the "Master Write-Read" IPMI command to be used to access devices on either the IPMB-L or IPMB-0 interfaces.

REQ 3.79 In a modular MicroTCA Carrier, each MCMC **shall** implement an I^2C interface to its Carrier FRU Information device as specified in Section 3.2.4, "Carrier FRU Information device requirements".

REQ 3.80 Carrier Managers **shall** implement the Shelf-Carrier Manager Interface as described in Section 3.4.3, "Shelf-Carrier Manager Interface".

REQ 3.81 Carrier Managers **shall** manage power for the FRU(s) as per the requirements of Section 3.8, "Power management".

REQ 3.82 Carrier Managers **shall** manage MicroTCA Carrier Backplane interconnects as specified in Section 3.10, "Electronic Keying".

REQ 3.83 Carrier Managers **shall** use addressing as specified in Section 3.3.6, "Addressing".

REQ 3.84 Carrier Managers **shall** support all commands in Table 3-46, "Command number assignments and requirements" in the column titled Carrier Mgr. Req and identified as mandatory.

REQ 3.85 Carrier Managers **shall** return IPMI Completion Codes, as described in the "Completion Codes" section of the IPMI specification, except as specified in this specification.

REQ 3.86 Each Carrier Manager **shall** return an IPMI Completion Code of "Parameter out of range (C9h)" for any request where the FRU Device ID refers to a FRU that is not implemented in its MicroTCA Carrier.

REQ 3.87 For all commands that take a FRU Device ID as request data, if that FRU is not present, Carrier Managers **shall** return the "Destination unavailable (D3h)" Completion Code.

REQ 3.88 When Carrier Managers receives a "Node Busy (C0h)" Completion Code, they **should** retry the command that triggered that response.

REQ 3.89 Each Carrier Manager **shall** implement a Device SDR Repository, as specified in Section 3.13.4, "Carrier Manager SDR requirements".

REQ 3.90 Carrier Managers **shall** comply with the IPM Controller requirements, as defined in Section 3.6.2 "FRU Information access commands" of the AdvancedTCA specification, except for FRU Device ID, which **shall** be assigned in accordance with Table 3-3, Table 3-5, Table 3-7, and Section 3.2.3 in this specification.

REQ 3.91 Carrier Managers **shall** comply with the SEL requirements, as specified in Section 3.12, "System Event Log".

REQ 3.92 Each Carrier Manager **shall** periodically verify that its MicroTCA Carrier FRUs are still present and responding.

Property of CERN - For Internal Use Only – External Distribution Prohibited

REQ 3.93 When communication is lost between the Carrier Manager and an MCMC or (E)MMC, the Carrier Manager **shall not** disable Payload Power or Management Power to the corresponding FRU, except as specified in Section 3.8, "Power management" for PM EMMCs.

REQ 3.94 If an MCMC or MMC enters the Communication Lost state, M7, Carrier Managers **shall not** change the associated E-Keying.

REQ 3.95 Carrier Managers **shall** send a FRU Hot Swap Sensor event message to the Shelf Manager to alert it of communication loss with a FRU.

REQ 3.96 Carrier Managers **shall** disable the other ends of the Fabric Interface Ports connected to any AdvancedMCs or MCMCs that are suddenly removed.

3.3.1 MCH Face Plate indicators

¶ 69 The MicroTCA Carrier Hub provides the same Face Plate LEDs that the AdvancedTCA Front Boards implement, as described in Section 3.2.5 "Front Board Face Plate indicators" of AdvancedTCA specification. All requirements in that section are applicable to the MCH.

Requirement

REQ 3.97 Modular MCHs **shall** comply with all the requirements as specified in Section 3.2.5 "Front Board Face Plate indicators" of the AdvancedTCA specification.

3.3.2 MCH Payload Interface

¶ 70 This specification does not define the implementation of the MCMC interface to the MCH Payload. The MCH developer is free to implement a suitable interface given other aspects of the MCH. Refer to Section 3.2.1 "Payload Interface" in the PICMG 3.0 AdvancedTCA specification for further guidance and requirements on the Payload Interface.

Requirements

REQ 3.98 Each MCH Payload Interface, if implemented, **shall** comply with the Payload Interface requirements as specified in Section 3.2.1 "Payload Interface" of the AdvancedTCA specification.

REQ 3.99 Each MCMC that implements the Payload Interface **shall** comply with the IPMI commands requirements listed under the Payload Interface column in Table 3-46, "Command number assignments and requirements" for commands received from that interface through LUN 00b. In addition, each MCMC **may** support these IPMI commands from the Payload Interface through LUN 01b and 11b. Each MCH resident Shelf Manager is governed by requirements in the Shelf Manager column of Table 3-46.

3.3.3 Carrier Manager IP address

¶ 71 An IP address is required for the Carrier Manager in order for it to communicate with a remote Shelf Manager. There are many potential mechanisms that the Carrier Manager can use to acquire an IPv4 address, such as pre-assigned static IPv4 address or using a DHCP server.

Property of CERN - For Internal Use Only – External Distribution Prohibited

¶ 72 Other methods of assigning IPv4 addresses are possible but outside the scope of this specification. Table 3-12 defines a Carrier FRU Information record that is used by the Carrier Manager to store its default IP address and the remote Shelf Manager IP address. The use of non-routable IP addresses as default IP addresses is recommended.

¶ 73 When the Shelf FRU Information is stored in the Carrier FRU Information device, the Shelf Manager cannot retrieve its IP address from the Shelf FRU Information until the Shelf-Carrier Manager Interface is established. In this case:

- The remote Shelf Manger is required to listen for Carrier Manager requests on an implementation-defined IP address that has a recommended default value of 192.168.16.17.
- The *Shelf Manager IP Address* field in the Carrier Manager IP Link record must match that implementation-defined IP address.

¶ 74 RFC1597 provides the range of non-routable IPv4 addresses that are reserved for a private network. This specification recommends that a Carrier Manager use 192.168.16.N as its default non-routable IPv4 address, where N = Carrier Number.

Table 3-12 Carrier Manager IP Link record

Offset	Length	Definition
0	1	*Record Type ID*. For all records defined in this specification a value of C0h (OEM) **shall** be used.
1	1	*End of List/Version*. 7:7 – End of List. Set to one for the last record. 6:4 – Reserved. Write as 0. 3:0 – Record format version. Set to 2h for this definition.
2	1	*Record Length*.
3	1	*Record Checksum*.
4	1	*Header Checksum*.
5	3	*Manufacturer ID*. LS byte first. Write as the three byte ID assigned to PICMG. For this specification, the value 12634 (00315Ah) **shall** be used.
8	1	*PICMG Record ID*. For the Carrier Manager IP Link record, the value 21h **shall** be used.
9	1	*Record Format Version*. For this specification, the value 00h **shall** be used.
10	4	*Shelf Manager IP Address*. MS-byte first. The default IPv4 address used by a Carrier Manager to establish a Shelf-Carrier Manager Interface to a remote Shelf Manager. The default *Shelf Manager IP Address* **should** be 192.168.16.17. The value 0.0.0.0 indicates that the *Shelf Manager IP Address* is undefined.
14	4	*Carrier Manager IP Address*. MS-byte first. The default IPv4 address used by a Carrier Manager to establish a Shelf-Carrier Manager Interface to a remote Shelf Manager. The value 0.0.0.0 indicates *Carrier Manager IP Address* is undefined. The default **should** be 192.168.16.0.
18	4	*MCH 1 IP Address*. MS-byte first. The default IPv4 address used for MCH 1 IP connections. The value 0.0.0.0 indicates *MCH 1 IP Address* is undefined. The default **should** be 192.168.16.0.
22	4	*MCH 2 IP Address*. MS-byte first. The default IPv4 address used for MCH 2 IP connections. The value 0.0.0.0 indicates *MCH 2 IP Address* is undefined. The default **should** be 192.168.16.0.

Property of CERN - For Internal Use Only – External Distribution Prohibited

Table 3-12 Carrier Manager IP Link record (continued)

Offset	Length	Definition
26	4	*Subnet Mask.* MS-byte first. A mask that identifies the network (vs. host) part of the *Carrier Manager and MCH 1 & 2 IP Address* fields. The value 0.0.0.0 indicates that no *Subnet Mask* is defined. The default **should** be 255.255.255.0.
30	4	*Gateway Address 0.* MS-byte first. This is the IP address of the gateway (router) used when the Carrier Manager *and MCHs* send a message or alert to a party on a different subnet. The value 0.0.0.0 indicates that no *Gateway Address 0* is defined.
34	4	*Gateway Address 1.* MS-byte first. This is an additional IP address of a gateway (router) used when Carrier Managers *and MCHs* send a message or alert to a party on a different subnet. The value 0.0.0.0 indicates that no *Gateway Address 1* is defined.
38	17	*Username*. A zero terminated string with a maximum length of 16, used to establish an RMCP session to the Shelf Manager. The value 0 in the first byte indicates that *Username* is undefined.
55	21	*Password*. A zero terminated string with a maximum length of 20, used to establish an RMCP session to the Shelf Manager. The value 0 in the first byte indicates that *Password* is undefined.

Requirements

REQ 3.100 Carrier FRU Information **shall** contain a Carrier Manager IP Link record that **should** provide default *Carrier Manager IP Address*, *Gateway Address 0* and *Subnet Mask* values. The Carrier Manager IP Link record **may** contain *Gateway Address 1*.

REQ 3.101 The Carrier Manager IP Link record default *Carrier Manager IP Address*, *Gateway Address 0* and *Subnet Mask* **should** be a non-routable IP address if provided.

REQ 3.102 If the Carrier Manager IP Link record *Carrier Manager IP Address* contains 192.168.16.0, each remote Carrier Manager **shall** use 192.168.16.N as its Carrier Manager IP address, where N = Carrier Number.

REQ 3.103 If the Carrier Manager IP Link record *MCH 1 IP Address* contains 192.168.16.0, MCH 1 **shall** use 192.168.16.N as its IP address, where N = Carrier Number + 32.

REQ 3.104 If the Carrier Manager IP Link record *MCH 2 IP Address* contains 192.168.16.0, MCH 2 **shall** use 192.168.16.N as its IP address, where N = Carrier Number + 48.

REQ 3.105 While a session exists with its Shelf Manager, each Carrier Manager **shall** use one or more UDP port numbers in the range of 0 to 65534 for its source port in RMCP sessions with its Shelf Manager. Each Shelf Manager receives on UDP port 623, as defined in the IPMI specification for RMCP sessions.

REQ 3.106 Carrier Managers **may** store the RMCP session user name and password in an implementation-defined manner. In that case, the *Username* and *Password* fields **may** be ignored.

3.3.4 IPMI event support

¶ 75 In MicroTCA, the Carrier Manager sends events (which include Hot Swap event messages, platform events for sensors on the MCH, OEM Module, AdvancedMC, PM, and CU) to the Shelf Manager over the Shelf-Carrier Manager Interface.

Requirements

REQ 3.107 Carrier Managers **shall** send the “Set Event Receiver (20h, LUN=0)” command to Modules. No other entity **shall** send any “Set Event Receiver” command to Modules.

Property of CERN - For Internal Use Only – External Distribution Prohibited

REQ 3.108 Each Carrier Manager **shall** accept the "Set Event Receiver" command from its Shelf Manager over the Shelf-Carrier Manager Interface. Upon receipt of that command, each Carrier Manager **shall** issue the "Set Event Receiver (20h, LUN=0)" command to all Modules in its MicroTCA Carrier.

REQ 3.109 Each Carrier Manager **shall** send IPMI platform events to its Shelf Manager as a designated event receiver over the Shelf-Carrier Manager Interface.

3.3.5 Redundant MCH operation

¶ 76 MicroTCA Carriers with redundant MCHs have redundant MCMCs. After both the MCMCs are initialized, an election for the Carrier Manager is performed. The Carrier Manager is a logical entity that represents the entire MicroTCA Carrier to the Shelf Manager. Electing the Carrier Manager is implementation-dependant and beyond the scope of this specification.

¶ 77 At any given time, one MCH performs all the Carrier Manager functions required by this specification. An implementation-defined synchronization mechanism is used to keep the other MCH ready to assume the Carrier Manager role. The fail-over mechanism between the pair of MCHs is implementation-defined and beyond the scope of this specification. During a fail-over, the other Modules in the system are typically not impacted. It is possible that one or more messages to the Carrier Manager are lost during the fail-over process. The new Carrier Manager can send a "Set Event Receiver" command to ask the Modules to resend active events.

¶ 78 The Carrier Manager is contacted using address 20h on both IPMB-L and IPMB-0. The AdvancedMCs, OEM Modules, PMs, and CUs are not aware of Carrier Manager role changes due to fail-overs.

Requirements

REQ 3.110 In a redundant MCH configuration, an election **shall** be performed to select a Carrier Manager. The method for this election is implementation-defined.

REQ 3.111 At any moment, a redundant MCH configuration **shall** have only one Carrier Manager.

REQ 3.112 An MCH that is not functioning as Carrier Manager **shall not** interfere with any normal management activities between its Carrier Manager and other Managed FRUs.

REQ 3.113 A Carrier Manager switchover **shall not** affect the operational status of other FRUs within its MicroTCA Carrier.

REQ 3.114 When a Carrier Manager switchover occurs, the new Carrier Manager **may** send a "Set Event Receiver" command to all the Modules in its MicroTCA Carrier to resend active events.

REQ 3.115 An MCH that is not functioning as Carrier Manager **shall** synchronize with its Carrier Manager. The synchronized data **shall** include Carrier FRU Information.

REQ 3.116 In a redundant MCH configuration, each Carrier Manager **shall** implement the Version Change Sensor (sensor type 2Bh) and its corresponding SDR, as defined in IPMI v2.0 specification, Section 42.2 "Sensor Type Codes and Data", Table 42-3.

REQ 3.117 Upon a switchover, if the new Carrier Manager does not use the same sensor numbering as the previous Carrier Manager, it **shall** send the Version Change Event message to its Shelf Manager with the Event Data 1 field set to either C1h or C7h and any Event Data 2 that makes sense to the MCH implementer. Any configuration change that is not defined in the Event Data 2 field **shall** use the Unspecified (00h) offset. When a Shelf

Property of CERN - For Internal Use Only – External Distribution Prohibited

Manager receives an event from a Carrier Manager's Version Change Sensor containing C1h or C7h in Data 1, it **shall** invalidate cached information about the Carrier Manager.

3.3.6 Addressing

¶ 79 For convenience in identifying AdvancedMC Slots implemented on a MicroTCA Carrier, the Carrier Manager implements extensions to the "Get Address Info" command. Table 3-13 describes these extensions, but does not repeat the basic functionality of this command that is required in any AdvancedTCA IPM Controller.

¶ 80 The extended version of the "Get Address Info" command can be addressed to the Carrier Manager to retrieve either:

- the FRU Device ID, using the MicroTCA Carrier Local Address of the AdvancedMC, PM, or CU on the MicroTCA Carrier, or
- the MicroTCA Carrier Local Address, using the FRU Device ID of an AdvancedMC, PM, or CU on the MicroTCA Carrier. The resulting MicroTCA Carrier Local Address can be converted to an IPMB address according to Table 3-5 and Table 3-7.

Note: Except for OEM Modules, the mappings returned by this command are fixed in this specification. Nevertheless, applications may choose to use the "Get Address Info" command for compatibility. For instance, these mappings are not fixed by the AdvancedMC Base specification.

Table 3-13 Get Address Info command extensions for Carrier Manager

	Byte	Data field
Request data	1	*PICMG Identifier.* Indicates that this is a PICMG-defined group extension command. A value of 00h **shall** be used.
	(2)	*FRU Device ID.* Indicates an individual FRU. This field is optional. If this field is not present, the command **shall** return addressing information for the FRU containing the MCMC that implements the command. This field is ignored when *Address Key Type* is set to MicroTCA Carrier Local Address.
	(3)	*Address Key Type*. This defines the type of address that is being provided in the *Address Key* field. This field is optional. If this field is not present, the command **shall** return addressing information for the FRU specified by the *FRU Device ID.* 03h = MicroTCA Carrier Local Address All other values reserved.
	(4)	*Address Key.* This field is required if *Address Key Type* is present. It holds the Site Number of an AdvancedMC, PM, CU or OEM Module that, combined with the *Site Type,* forms the MicroTCA Carrier Local Address of the FRU.
	(5)	*Site Type.* This field is required if *Address Key Type* is a MicroTCA Carrier Local Address. See Table 3-14 for valid *Site Type* values.

Property of CERN - For Internal Use Only – External Distribution Prohibited

Table 3-13 Get Address Info command extensions for Carrier Manager (continued)

Response data	1	*Completion Code.*
	2	*PICMG Identifier.* Indicates that this is a PICMG-defined group extension command. A value of 00h **shall** be used.
	3	*MCH Site Number.* The Site Number of the MCH that is executing the Carrier Manager.
	4	*IPMB-0 Address* of the MCMC on the MCH that is executing the Carrier Manager.
	5	*Reserved.* **Shall** have a value of FFh. Other values reserved in PICMG 2.9.
	6	*FRU Device ID.* The FRU Device ID associated with the AdvancedMC, PM, CU or OEM Module that the Site Number and Site Type designate. **Shall** have a value of FFh if request data bytes 2 through 5 are not specified.
	7	*Site Number.* The Site Number associated with the AdvancedMC, PM, CU or OEM Module that the FRU Device ID designates. This field, when combined with *Site Type*, forms a MicroTCA Carrier Local Address of the FRU and **shall** have a value of 00h if request data bytes 2 through 5 are not specified.
	8	*Site Type*. This field **shall** contain a value of FFh if request data bytes 2 through 5 are not specified. See Table 3-14 for valid *Site Type* values.
	9	*Carrier Number.* This field identifies the MicroTCA Carrier within a Shelf and **shall** contain a value of 00h if request data bytes 2 through 5 are not specified.

Table 3-14 Site Type values

Site Type description	Site Type value
Cooling Unit	04h
AdvancedMC	07h
MicroTCA Carrier Hub	0Ah
Power Module	0Bh
OEM Module	C0h-CFh
Unknown	FFh
Reserved	Other values

Requirements

REQ 3.118 Carrier Managers **shall** support the “Get Address Info” command as shown in Table 3-13.

REQ 3.119 Each Carrier Manager **shall** support at least the “Get Address Info” message formats, where the Request Data beyond the *PICMG Identifier* or the *FRU Device ID* is missing, and **shall** return its own addressing information. Carrier Managers **may** support cases where the additional Request Data is not empty.

REQ 3.120 In the implementation of the “Get Address Info” command for OEM Modules, Carrier Managers **shall** use Carrier FRU Information OEM Module description records to map between a FRU Device ID and the corresponding MicroTCA Carrier Local Address (including its Site Type and Site Number).

Property of CERN - For Internal Use Only – External Distribution Prohibited

3.3.6.1 MCH Geographic Address

¶ 81 The MCH Geographic Address is used to uniquely identify the MCH within the MicroTCA Carrier. The MCMC reads the Geographic Address to identify if it is MCMC1 or MCMC2. If any Geographic Address other than ones defined in Table 3-15 is returned, or if an MCH Geographic Address failure is detected, the MCMC does not attempt to perform the Carrier Manager function.

Table 3-15 MCH addressing

GA[2:0]	MCMC IPMB-0 address	MicroTCA Carrier Local Address		FRU Device ID on Carrier Manager
		Site Number	Site Type	
UUU	10h	1	MCH(0Ah)	3
PPP	12h	2	MCH(0Ah)	4

Requirements

REQ 3.121 Each MCMC **shall** use the MCH Geographic Address defined in Table 3-15, "MCH addressing" to identify itself as MCMC 1 or MCMC 2.

REQ 3.122 If the MCH Geographic Address is not one of the values in Table 3-15, MCMCs **shall not** attempt to perform the Carrier Manager function.

REQ 3.123 MCMCs **should** attempt to notify a redundant MCH of a Geographic Address failure using an implementation-defined interface.

3.3.6.2 Intelligent Platform Management Bus address

¶ 82 The Carrier Manager has multiple IPMB interfaces, as described in Section 3.2.1 and Section 3.2.2. The Shelf-Carrier Manager Interface is considered a logical IPMB between the Shelf Manager and the Carrier Managers in the MicroTCA management architecture. The Shelf Manager, Carrier Manager, and the MCMC potentially use different IPMB addresses on the different IPMBs.

Requirements

REQ 3.124 Each Carrier Manager **shall** use 20h as its address on IPMB-L and IPMB-0.

REQ 3.125 Each MCMC **shall** only respond to its Geographic Address based address on IPMB-0 and **shall** be either physically or logically isolated from IPMB-L, while not involved in the Carrier Manager function.

REQ 3.126 Each MCMC **shall** respond to its own MCMC address on IPMB-0 while involved in the Carrier Manager function.

Property of CERN - For Internal Use Only – External Distribution Prohibited

3.3.7 Carrier Number

¶ 83 Each MicroTCA Carrier is identified by its MicroTCA Carrier Number within a MicroTCA Shelf. This specification uses Carrier Number to refer to the MicroTCA Carrier Number.

¶ 84 The MicroTCA Carrier is assigned a unique Carrier Number during the initialization phase, and that Carrier Number cannot change until the MicroTCA Carrier is once again initialized. Typically, the Carrier Number is assigned based on the Carrier's physical location in the MicroTCA Shelf.

¶ 85 The Carrier Numbers are assigned arbitrarily, but always uniquely within a Shelf. For example, the Carrier Number can be assigned during the initial system installation in the Carrier Information record defined in Table 3-16 and stored in the Carrier FRU Information. If the MicroTCA Carrier is moved to another location within the MicroTCA Shelf, the Carrier Number field needs to be updated to reflect the new location in a MicroTCA Shelf.

¶ 86 If a hardware-based Carrier Number assigning scheme is desired, the Shelf can implement I^2C-based locator devices. Figure 3-3 shows how this scheme works. An I^2C-accessed MicroTCA Carrier locator device is connected to the MCMC's private I^2C bus to which the Carrier FRU Information device is also connected. The I^2C address of a MicroTCA Carrier locator cannot conflict with the address of a Carrier FRU Information device.

Figure 3-3 Carrier number assignment in a MicroTCA Shelf

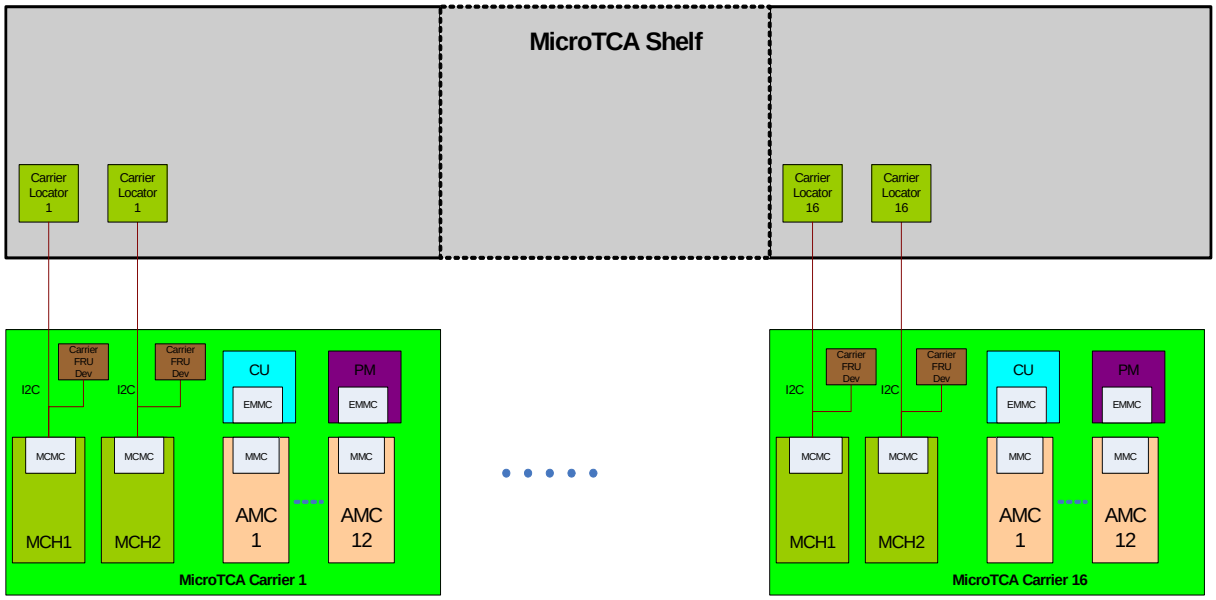

¶ 87 There are many I^2C-based I/O expanders available. The PCF8574A is a widely used I^2C I/O expander device from Philips, with functionally equivalent devices available from Texas Instruments and Maxim Integrated Products. The DIP switch can be either a mechanical DIP switch or an electronic DIP switch, such as the PCA9558. Figure 3-4 shows an implementation example of a MicroTCA Carrier locator, based on an I^2C I/O expander and a mechanical DIP switch. In the example, both the DIP switch and the I^2C I/O expander are located in the MicroTCA Shelf external to the MicroTCA Carrier. A four-bit DIP switch is connected to the lower four bits of the I/O lines of the I^2C I/O expander, and it is used by the

Property of CERN - For Internal Use Only – External Distribution Prohibited

MCMC to set the Carrier Number. The I/O expander connects to the MCMC's private I^2C bus. The MCMC reads the DIP switch setting from the I/O expander, adds one, and uses the result as its Carrier Number.

Figure 3-4 I^2C Carrier locator example

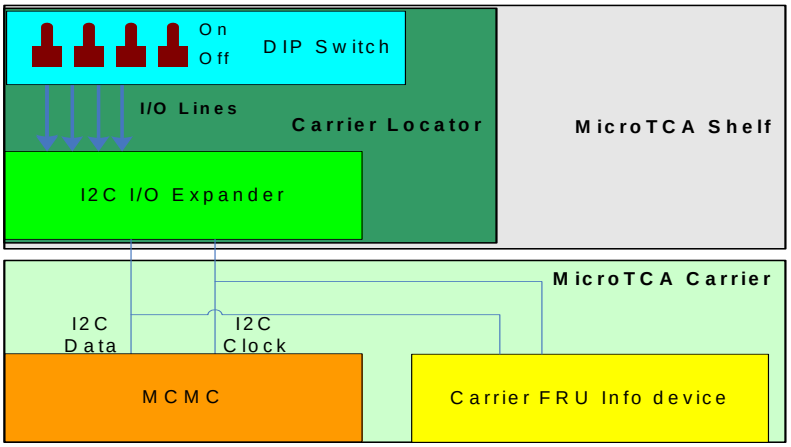

Requirements

REQ 3.127 Each MicroTCA Carrier **shall** have a unique Carrier Number, ranging from 1 to 16 in its MicroTCA Shelf.

REQ 3.128 Each MicroTCA Carrier **may** assign a Carrier Number via the *Carrier Number* field in the MicroTCA Carrier Information record, as defined in Table 3-16.

REQ 3.129 MicroTCA Shelf implementations **may** use other schemes to assign the Carrier Number. If a hardware based Carrier Number assignment method is desired, a MicroTCA Shelf implementation **should** use the I^2C based I/O expander solution described in this subsection.

REQ 3.130 If present, the I^2C based I/O expander I^2C address **shall** be 3Eh.

REQ 3.131 If present, the I^2C based I/O expander **shall** be compatible with the programming interface of a PCF8574A device.

REQ 3.132 The lower four I/O bits of the I/O expander **shall** be used to set the Carrier Number. The Carrier Number **shall** be generated by adding one to the four-bit I/O value.

REQ 3.133 Each MCMC **shall** first attempt to determine its Carrier Number from the *Carrier Number* field in its MicroTCA Carrier Information record, as defined in Table 3-16. If the *Carrier Number* field contains FFh, each MCMC **shall** attempt to get its Carrier Number from the I^2C-based I/O expander.

REQ 3.134 If an MCMC cannot determine its Carrier Number, it **shall not** attempt to become a Carrier Manager.

Property of CERN - For Internal Use Only – External Distribution Prohibited

3.3.8 Location information

¶ 88 The physical location of Modules within a MicroTCA Carrier is implementation-defined by the layout of the MicroTCA Carrier Backplane. The location of the MicroTCA Carrier within a Shelf is implementation-defined by the system integrator. For the platform management software to determine where a particular MicroTCA Carrier or Module is located, this specification defines the MicroTCA Carrier Information and the MicroTCA Shelf Information records in the Carrier FRU Information and the Shelf FRU Information, respectfully. These records contain mapping information used to describe the physical location of MicroTCA Carrier(s) and Modules within a Shelf.

¶ 89 Tier and Slot numbering can be started at 1 or 0, as determined by the implementation to match the labeling on the Shelf. This is indicated by the *One-based Tier Numbers* and *One-based Slot Numbers* fields in the MicroTCA Shelf Information record. The Shelf Manager uses these fields to determine if it needs to subtract 1 when calculating absolute Tier and Slot Numbers.

¶ 90 A Module's Tier and Slot Number within a MicroTCA Carrier are relative to the MicroTCA Carrier's Tier and Slot Number, which refer to the lower left Slot within the MicroTCA Carrier. For example, in a Shelf with multiple MicroTCA Carriers with numbering starting at 1, the MicroTCA Carrier in the lower left corner is located at Tier 1 - Slot 1 (T1-1) within the Shelf. The AdvancedMC Slot located at Tier 1 - Slot 3 (T1-3) within the MicroTCA Carrier at Tier 1 - Slot 1 (T1-1) is therefore located at Tier 1 - Slot 3 (T1-3) within the Shelf. An AdvancedMC Slot at T1-3 within a MicroTCA Carrier at T2-1 is therefore located at T2-3 within the Shelf. See Section 2.18.6 for figures with example numbering.

¶ 91 The MicroTCA *Carrier Orientation* field in the MicroTCA Carrier Information record indicates whether the MicroTCA Carrier is in a standard vertical orientation, with Slot Numbers incrementing from left to right and Tier Numbers incrementing from bottom to top, or in a horizontal orientation. Tier Numbers increment from left to right and Slot Numbers increment from bottom to top in the horizontal orientation. If a MicroTCA Carrier is reoriented from standard to horizontal, the MicroTCA Carrier and Shelf FRU Information and labels are updated to keep the numbers incrementing from left to right and bottom to top.

¶ 92 The *Shelf Origin X, Shelf Origin Y, Carrier Origin X, Carrier Origin Y, Slot Origin X* and *Slot Origin Y* fields are provided in the MicroTCA Shelf Information and MicroTCA Carrier Information records, to enable upper level management software to aid a craft person in locating MicroTCA Shelves, MicroTCA Carriers, and Modules.

Property of CERN - For Internal Use Only – External Distribution Prohibited

¶ 93 The MicroTCA Carrier Information record contains the Carrier Number and the Slot Entries that contain the Tier Number and Slot Number locations of all the Slots within a MicroTCA Carrier. The Slot location coordinates are relative to the location of the MicroTCA Carrier's lower left Slot, which is described in Table 3-18, "MicroTCA Shelf Information record." The MicroTCA Carrier Information record is defined in Table 3-16 and resides in the Carrier FRU Information.

Table 3-16 MicroTCA Carrier Information record

Offset	Length	Definition
0	1	*Record Type ID*. For all records defined in this specification a value of C0h (OEM) **shall** be used.
1	1	*End of List/Version*. 7:7 – End of List. Set to one for the last record. 6:4 – Reserved. Write as 0. 3:0 – Record format version. Set to 2h for this definition.
2	1	*Record Length*.
3	1	*Record Checksum*.
4	1	*Header Checksum*.
5	3	*Manufacturer ID*. LS byte first. Write as the three byte ID assigned to PICMG. For this specification, the value 12634 (00315Ah) **shall** be used.
8	1	*PICMG Record ID*. For this record, the value 22h **shall** be used.
9	1	*Record Format Version*. For this specification, the value 00h **shall** be used.
10	1	*Carrier Number*. Contains a unique value from 1 to 16 used to identify this MicroTCA Carrier. A value of FFh indicates the Carrier Number is not specified.
11	1	[7] - *Carrier Orientation.* 0b = Slot Numbers increment from left to right and Tier Numbers bottom to top 1b = Slot Numbers increment from bottom to top and Tier Numbers increment left to right [6:0] - *Slot Entry Count.* Indicates the number of entries (M) in the Carrier Information record for the MicroTCA Carrier. There is one *Slot Entry* for each Slot in a MicroTCA Carrier including PM, CU, MCH, OEM and AdvancedMC Slots.
12	M*8	*Slot Entries*. This is an array of *Slot Entries*. Each entry **shall** be formatted as defined in Table 3-17.

Table 3-17 Slot Entry

Offset	Length	Definition
0	1	*Site Number.* This field, when combined with the Site Type, forms a MicroTCA Carrier Local Address of the FRU.
1	1	*Site Type.* See Table 3-14 for values.
2	1	*Slot Number.* This is the MicroTCA Carrier relative physical Slot Number for the Slot.
3	1	*Tier Number.* This is the MicroTCA Carrier relative Tier Number for the Slot.
4	2	*Slot Origin Y.* See REQ 3.143 for details.
6	2	*Slot Origin X*. See REQ 3.144 for details.

Property of CERN - For Internal Use Only – External Distribution Prohibited

Requirements

REQ 3.135 Carrier FRU Information **shall** include a MicroTCA Carrier Information record containing the *Carrier Number, Carrier Orientation* and *Slot Entry* fields for the MicroTCA Carrier, as defined in Table 3-16.

REQ 3.136 The MicroTCA Carrier Information record **shall** contain one *Slot Entry* record for each MCH, AdvancedMC, PM, CU and OEM Module Slot implemented by its MicroTCA Carrier.

REQ 3.137 Slots that are not implemented in a MicroTCA Carrier **shall not** appear in the MicroTCA Carrier Information record.

REQ 3.138 The MicroTCA Carrier Information record *Carrier Number* field **shall** contain the Carrier Number of its MicroTCA Carrier, if the optional I^2C based I/O expander Carrier Number hardware is not present.

REQ 3.139 Each *Slot Entry* **shall** contain the *Site Type* values from Table 3-14 for an MCH, AdvancedMC, PM, CU or OEM Module Slot implemented in the corresponding MicroTCA Carrier.

REQ 3.140 Each *Slot Entry* **shall** contain the *Site Number* value for an MCH, AdvancedMC, PM, CU or OEM Module Slot implemented in the corresponding MicroTCA Carrier.

REQ 3.141 Each *Slot Entry* **shall** contain the *Slot Number, Tier Number, Slot Origin Y* and *Slot Origin X* for an MCH, AdvancedMC, PM, CU or OEM Module Slot implemented in the corresponding MicroTCA Carrier.

REQ 3.142 *Slot Numbers* and *Tier Numbers* **may** be one or zero-based and **shall** be consistent with the Shelf's labeling and MicroTCA Shelf Information record *One-based Slot Numbers* and *One-based Tier Numbers* fields defined in Table 3-18.

REQ 3.143 *Slot Origin Y* **shall** indicate the distance from ejector handle corner of the Slot to the bottom edge of the MicroTCA Carrier in a standard vertical orientation or left edge of the MicroTCA Carrier in a horizontal orientation, least significant byte first.

REQ 3.144 *Slot Origin X* **shall** indicate the distance from ejector handle corner of the Slot to the left edge of the MicroTCA Carrier in a standard vertical orientation or bottom edge of the MicroTCA Carrier in a horizontal orientation, least significant byte first.

REQ 3.145 The *Slot Origin X* and *Slot Origin Y* fields in the *Slot Entry* record **shall** be in 1 millimeter increments, rounded to the nearest millimeter.

Property of CERN - For Internal Use Only – External Distribution Prohibited

¶ 94 The physical location of MicroTCA Carriers within a MicroTCA Shelf and the Shelf Address (see Section 3.2.3.4 “Shelf addressing” of the AdvancedTCA specification) is described in the MicroTCA Shelf Information record which is defined in Table 3-18. MicroTCA Shelf Information records reside in the Shelf FRU Information.

Table 3-18 MicroTCA Shelf Information record

Offset	Length	Definition
0	1	*Record Type ID*. For all records defined in this specification a value of C0h (OEM) **shall** be used.
1	1	*End of List/Version*. 7:7 – End of List. Set to one for the last record. 6:4 – Reserved. Write as 0. 3:0 – Record format version. Set to 2h for this definition.
2	1	*Record Length*.
3	1	*Record Checksum*.
4	1	*Header Checksum*.
5	3	*Manufacturer ID*. LS byte first. Write as the three byte ID assigned to PICMG. For this specification, the value 12634 (00315Ah) **shall** be used.
8	1	*PICMG Record ID*. For this record, the value 23h **shall** be used.
9	1	*Record Format Version*. For this specification, the value 00h **shall** be used.
10	1	*Type/Length Byte* (FRU Information variant) [7:6] - *Type.* [5:0] - *Length.*
11	20	*Shelf Address* bytes as a fixed size field, with *Length* bytes of the Shelf address, encoded according to the *Type* field in byte 10 and starting at byte 11. The values of the unused bytes of the fixed size field - bytes (11 + *Length*) - 30 are undefined.
31	2	*Shelf Origin X.* The distance in millimeters from the lower left corner of the MicroTCA Shelf to the left edge of the Frame.
33	2	*Shelf Origin Y.* The distance in millimeters from the lower left corner of the MicroTCA Shelf to the bottom of the Frame.
35	1	[7] - *One-based Slot Numbers.* 1b = *Slot Numbers* are one-based 0b = *Slot Numbers* are zero-based [6] - *One-based Tier Numbers.* 1b = *Tier Numbers* are one-based 0b = *Tier Numbers* are zero-based [5] - reserved. [4:0] - *MicroTCA Carrier Location Entries Count.* Indicates the number of these entries (M) in the MicroTCA Shelf Information record for the Shelf. There is one Entry for each MicroTCA Carrier in a Shelf.
36	M*7	*MicroTCA Carrier Location Entries*. This is an array of MicroTCA Carrier Location Entries. Each entry **shall** be formatted as defined in Table 3-19.

Property of CERN - For Internal Use Only – External Distribution Prohibited

Table 3-19 MicroTCA Carrier Location Entry

Offset	Length	Definition
0	1	*Carrier Number*. The Carrier Number for this MicroTCA Carrier Entry.
1	1	*Slot Number*. The physical Slot Number of the lower left corner of this MicroTCA Carrier within this Shelf.
2	1	*Tier Number*. The physical Tier Number of the lower left corner of this MicroTCA Carrier within this Shelf.
3	2	*Carrier Origin Y*. See REQ 3.154 for details.
5	2	*Carrier Origin X*. See REQ 3.155 for details.

Requirements

REQ 3.146 Shelf FRU Information **shall** contain a MicroTCA Shelf Information record, as defined in Table 3-18.

REQ 3.147 Each MicroTCA Shelf Information record **shall** contain *Shelf Origin Y* and *Shelf Origin X* fields to indicate the distance in millimeters from MicroTCA Shelf's lower left corner to the lower left corner of the Frame.

REQ 3.148 The *Shelf Origin X* and *Shelf Origin Y* fields **shall** be in 1 millimeter increments, rounded to the nearest millimeter.

REQ 3.149 The MicroTCA Shelf Information record **shall** contain one *MicroTCA Carrier Location Entry* for each MicroTCA Carrier implemented in a Shelf.

REQ 3.150 Each *MicroTCA Carrier Location Entry* **shall** contain the *Slot Number* and *Tier Number* of the lower left Slot of the MicroTCA Carrier that is identified by the *Carrier Number* field.

REQ 3.151 The *Slot Number* and *Tier Number* of the lower left Slot of the MicroTCA Carrier located at the lower left corner of a Shelf **shall** be 00h for Shelves with numbering that starts with zero.

REQ 3.152 The *Slot Number* and *Tier Number* of the lower left Slot of the MicroTCA Carrier located at the lower left corner of a Shelf **shall** be 01h for Shelves with numbering that starts with one.

REQ 3.153 Each *MicroTCA Carrier Location Entry* **shall** contain the *Carrier Origin X* and *Carrier Origin Y* fields for the MicroTCA Carrier.

REQ 3.154 *Carrier Origin Y* **shall** indicate the distance from lower left corner of MicroTCA Carrier to the bottom edge of the Shelf in a standard vertical orientation or in a horizontal orientation, least significant byte first.

REQ 3.155 *Carrier Origin X* **shall** indicate the distance from lower left corner of MicroTCA Carrier to the left edge of the Shelf in a standard vertical orientation or in a horizontal orientation, least significant byte first.

REQ 3.156 The *Carrier Origin X* and *Carrier Origin Y* fields **shall** be in 1 millimeter increments, rounded to the nearest millimeter.

REQ 3.157 MicroTCA Shelf Information and MicroTCA Carrier Information record contents **shall** match the labels and geometry implemented by a Shelf to ensure the absolute Slot Numbers and Tier Numbers computed by a Shelf Manager match those labels.

Property of CERN - For Internal Use Only – External Distribution Prohibited

¶ 95 The “Get Location Information” command is used to provide the Slot and Tier Number of a particular Slot within a MicroTCA Carrier or the MicroTCA Carrier within a Shelf. The Carrier Manager responds to the command by returning the location information of a Module within a MicroTCA Carrier. The Shelf Manager responds to the command by returning the location of a MicroTCA Carrier or a Module within the entire Shelf.

¶ 96 The Slot Number and Tier Number values are implementation-defined. However, the FRU Information data structures must match the physical labeling used on the MicroTCA Shelf.

¶ 97 AdvancedMCs can support the “Get Location Information” command to provide local applications with the information. If the AdvancedMC supports the command, it uses the “Get Location Information” command to request the information from the Carrier Manager and Shelf Manager, as it does not have direct access to the information.

Table 3-20 Get Location Information command

	Byte	Data field
Request data	1	*PICMG Identifier.* Indicates that this is a PICMG-defined group extension command. A value of 00h **shall** be used.
	2	[7:6] - *MCS.* Module Slot, Carrier or Shelf selector. 3h = Reserved 2h = Get location information for a Slot within a MicroTCA Carrier, identified by the *Site Number* and *Site Type* fields 1h = Get location information for the MicroTCA Carrier within a Shelf, identified by the *Carrier Number* field 0h = Get location information for the MicroTCA Shelf within a Frame [5] - Reserved. [4:0] - *Carrier Number*. This field contains a unique value from 1 to 16 used to select a MicroTCA Carrier. The value 0 specifies this MicroTCA Carrier. This field is not used when *MCS* = 0.
	(3)	*Site Number.* This field, when combined with the *Site Type*, forms a MicroTCA Carrier Local Address. This field is required when *MCS* = 2 and is not used for other *MCS* values.
	(4)	*Site Type*. See Table 3-14 for values. This field is required when *MCS* = 2 and is not used for other *MCS* values.

Property of CERN - For Internal Use Only – External Distribution Prohibited

Table 3-20 Get Location Information command (continued)

Response data	1	*Completion Code.*
	2	*PICMG Identifier.* Indicates that this is a PICMG-defined group extension command. A value of 00h **shall** be used.
	3	*Slot Number.* Slot Number of a Slot or lower left Slot of a MicroTCA Carrier. Not used for Shelf, write as 0h.
	4	*Tier Number.* Tier Number of a Slot or lower left Slot of a MicroTCA Carrier. Not used for Shelf, write as 0h.
	5	[7] - *One-based Slot Numbers.* Not used for Shelf, write as 0b. 0b = *Slot Numbers are* zero-based 1b = *Slot Numbers* are one-based [6] - *One-based Tier Numbers.* Not used for Shelf, write as 0b. 0b = *Tier Numbers are* zero-based 1b = *Tier Numbers* are one-based [5] - *Carrier Orientation.* Not used for Shelf, write as 0b. 0b = Slot Numbers increment from left to right and Tier Numbers bottom to top 1b = Slot Numbers increment from bottom to top and Tier Numbers increment left to right [4:0] - Reserved, write as 00h.
	6-7	*Origin X.* Distance in millimeters from the lower left corner of a MicroTCA Carrier to the left edge of its Shelf, or from the ejector handle corner of a Slot to the left edge of its MicroTCA Carrier, or from the lower left corner of a MicroTCA Shelf to the left edge of its Frame, least significant byte first.
	8-9	*Origin Y.* Distance in millimeters from the lower left corner of a MicroTCA Carrier to the bottom edge of its Shelf, or from the ejector handle corner of a Slot to the bottom edge of its MicroTCA Carrier, or from the lower left corner of a MicroTCA Shelf to the bottom edge of its Frame, least significant byte first.

Requirements

REQ 3.158 MicroTCA Shelf Managers **shall** respond to the "Get Location Information" command as defined in Table 3-20, based on the MicroTCA Shelf Information and MicroTCA Carrier Information records found in the Shelf FRU Information and Carrier FRU Information.

REQ 3.159 Shelf Managers **shall** respond to the "Get Location Information" command to provide the location information of a MicroTCA Shelf, MicroTCA Carrier or Slot within a MicroTCA Carrier, as specified by the *MCS* field.

REQ 3.160 Shelf Managers **shall** respond to the "Get Location Information" command to provide the location information for a MicroTCA Carrier, as specified by the *Carrier Number* field.

REQ 3.161 Shelf Managers and Carrier Managers **shall** provide the distance from the ejector handle corner of a Slot to the left edge of the MicroTCA Carrier in the *Origin X* field, for standard vertical and horizontal MicroTCA Carrier orientations. For example, when requesting the location information for a Slot, where its MicroTCA Carrier is in a horizontal orientation, the *Origin X* field contains the *Slot Origin Y* value.

REQ 3.162 Shelf Managers and Carrier Managers **shall** provide the distance from the ejector handle corner of a Slot to the bottom edge of the MicroTCA Carrier in the *Origin Y* field, for standard vertical and horizontal MicroTCA Carrier orientations. For example, when requesting the location information for a Slot, where its MicroTCA Carrier is in a horizontal orientation, the *Origin Y* field contains the *Slot Origin X* value.

Property of CERN - For Internal Use Only – External Distribution Prohibited

REQ 3.163 Each Shelf Manager **shall** determine if zero- or one-based numbering is used in the Shelf based on the contents of the *One-based Slot Numbers* and *One-based Tier Numbers* fields.

REQ 3.164 Shelf Managers **shall** provide the absolute Slot Number and absolute Tier Number for each Module within a Shelf, by performing the addition of MicroTCA Carrier Slot Number and Tier Number with Module Slot and Tier Number, respectively. If the numbering is one-based, Shelf Managers **shall** subtract one from the sum when adding the Slot and Tier Numbers.

REQ 3.165 Shelf Managers **shall not** distinguish standard and horizontal orientations while performing Slot and Tier Number calculations, as specified by REQ 3.164. For example, in a horizontal implementation, a Module's Tier Number is added to its MicroTCA Carrier's Tier Number to determine the absolute Tier Number of the Module within its Shelf.

REQ 3.166 If the MicroTCA Carrier indicated by *Carrier Number* is not valid or not implemented, Carrier Managers and Shelf Managers **shall** respond to the "Get Location Information" command with a Completion Code of "Parameter out of range (C9h)."

REQ 3.167 Each Carrier Manager **shall** respond to the "Get Location Information" command, as defined in Table 3-20, to provide the relative location information of a Slot within its MicroTCA Carrier, based on *Site Type* and *Site Number*, from MicroTCA Carrier Information records found in its Carrier FRU Information.

REQ 3.168 If the Slot indicated by *MicroTCA Carrier Local Address* is not valid or not implemented, Carrier Managers and Shelf Managers **shall** respond to the "Get Location Information" command with a Completion Code of "Parameter out of range (C9h)."

REQ 3.169 Each AdvancedMC MMC **may** issue or respond to the "Get Location Information" command to provide the AdvancedMC location to its Payload. Each MMC **may** issue the "Send Message" command to its Carrier Manager with an encapsulated "Get Location Information" command addressed to its Shelf Manager as described in Section 3.15, "IPMI message bridging."

3.4 Shelf Manager

¶ 98 In MicroTCA, the Shelf Manager acts as the aggregation point for MicroTCA Carriers that comprise a MicroTCA Shelf. As described in Section 3.4.3 of this specification, the Shelf Manager communicates with the Carrier Manager over the Shelf-Carrier Manager Interface, with Ethernet being the most common transport for a remote Shelf Manager. The Shelf Manager sends IPMI commands to the Carrier Manager and receives Event messages from the Carrier Manager over the Shelf-Carrier Manager Interface. This model differs from the one in the AdvancedTCA specification, where the IPMB-0 interface is used for transferring messages between the AdvancedTCA Front Boards and the Shelf Manager.

3.4.1 Shelf Manager configuration options

¶ 99 The Shelf-Carrier Manager Interface between a remote Shelf Manager and its Carrier Managers is based on communication over an IP-capable transport. This allows for flexibility when deploying the Shelf Manager subsystem. The following are some example locations for Shelf Managers in a MicroTCA environment:

- On AdvancedMC(s) within a single or multiple MicroTCA Carrier Shelf, performing Shelf Manager functions along with other functions (see Figure 3-2).

Property of CERN - For Internal Use Only – External Distribution Prohibited

- Located with the Carrier Manager function on an MCH (see Figure 3-5). In this case, the Shelf Manager can be implemented on a separate processor or share a processor with the Carrier Manager. When the Shelf Manager is located with the Carrier Manager, the Shelf-Carrier Manager Interface is implementation-defined.
- On a non-MicroTCA platform, external to the MicroTCA Shelf, where the Shelf Manager and overall System Manager can execute (see Figure 3-6).

¶ 100 This specification allows implementers the freedom to choose a model that suits their needs, based on system design, reliability/availability/serviceability needs, and cost.

Figure 3-5 Example of Shelf Manager located with Carrier Manager

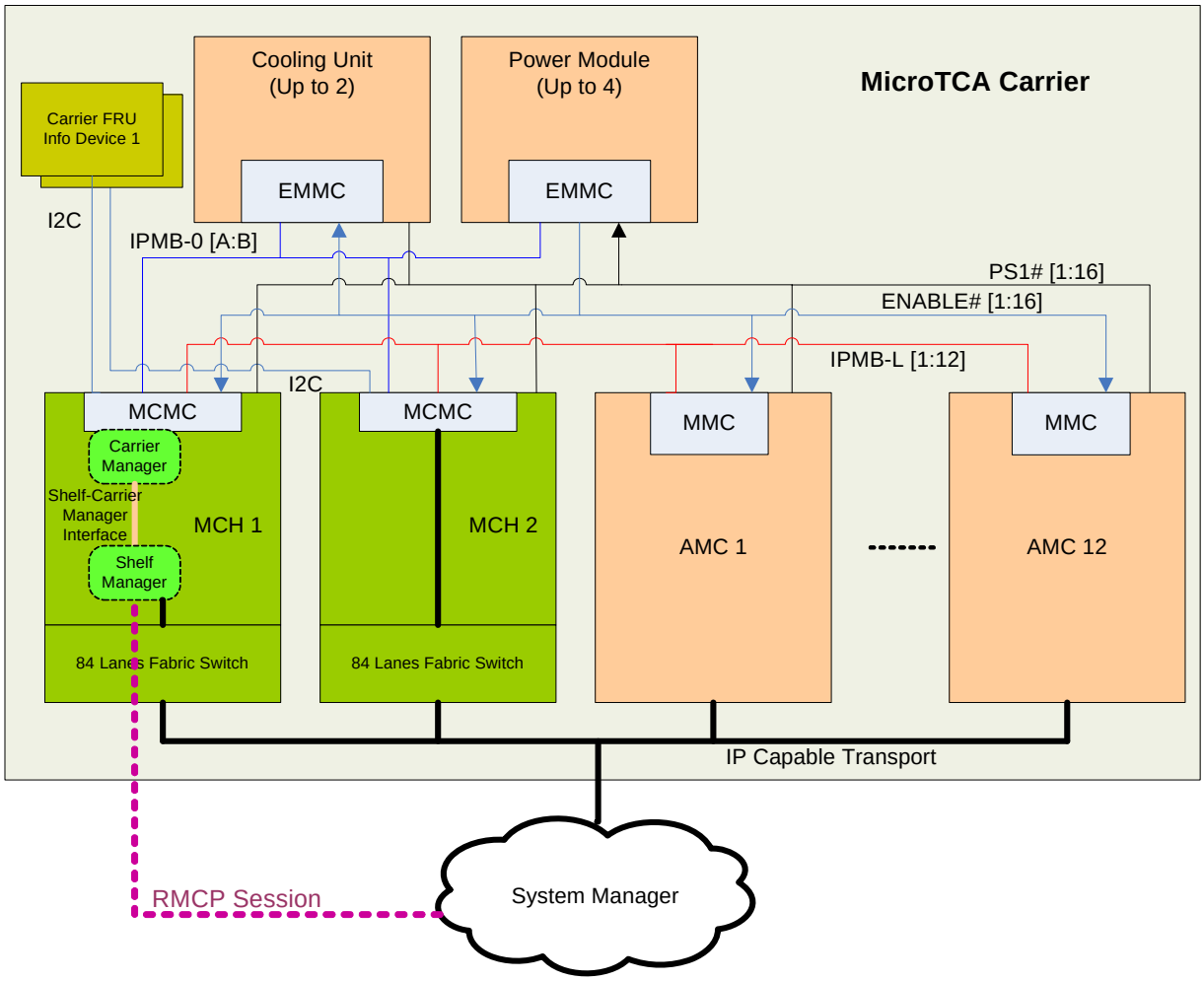

Property of CERN - For Internal Use Only – External Distribution Prohibited

Figure 3-6 Example of Shelf Manager on an external non-MicroTCA platform

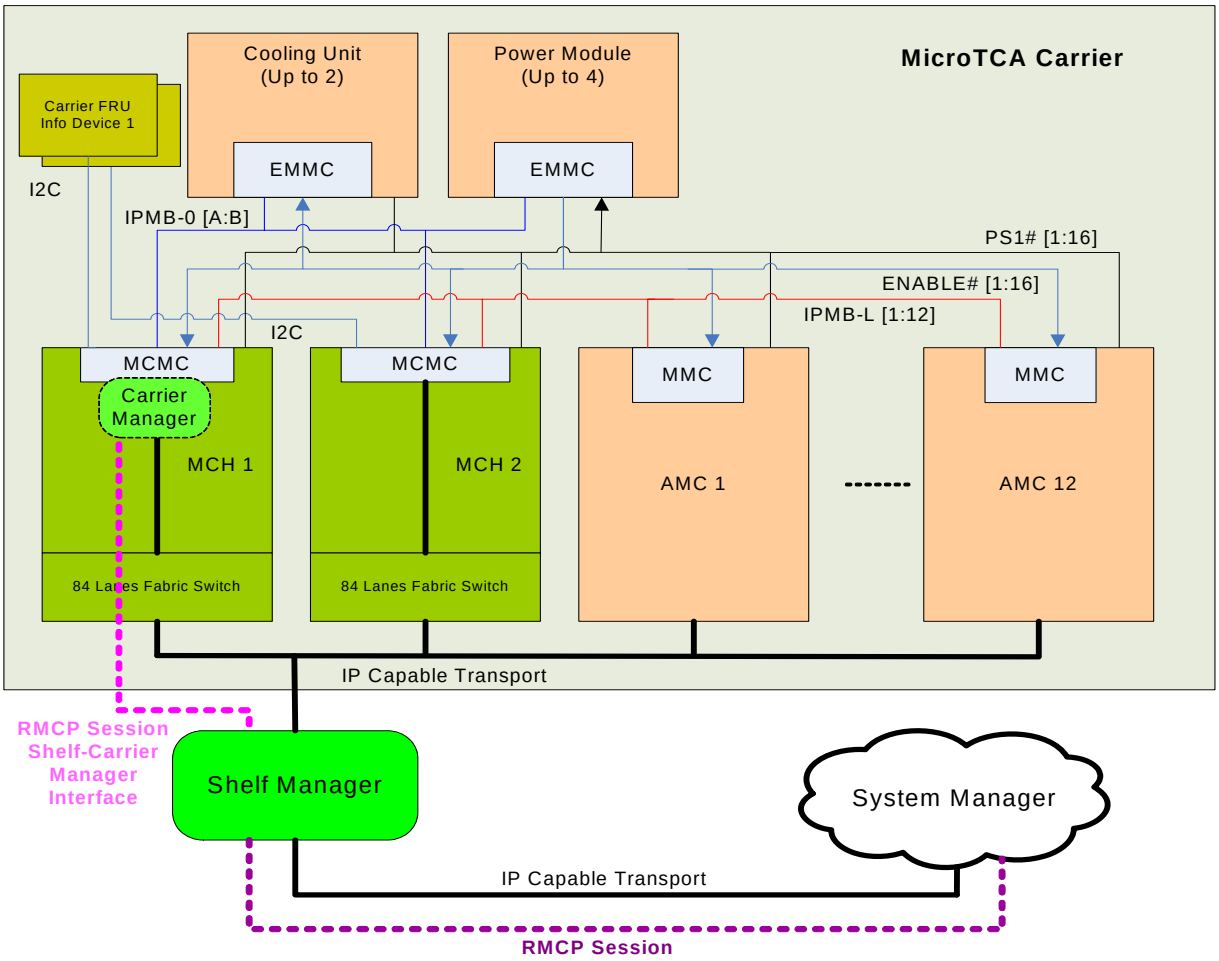

3.4.2 Differences from the AdvancedTCA Shelf Manager

¶ 101 The MicroTCA Shelf Manager functions are not the same as the functions of the AdvancedTCA Shelf Manager. Many of the functions performed by the Shelf Manager in AdvancedTCA are performed by the Carrier Manager in MicroTCA. Key areas of difference from the AdvancedTCA Shelf Manager are described in the following paragraphs. For detailed information on each topic, refer to the corresponding subsection.

¶ 102 Certain FRUs need to be powered-up by the Carrier Manager before the Shelf Manager is operational in the MicroTCA Shelf, for example, when the Shelf Manager is running on an AdvancedMC. For such FRUs, activation is managed by the Carrier Manager, based on the contents of the MicroTCA Carrier Activation and Power Management record in the Carrier FRU Information.

¶ 103 A newly connected Shelf Manager must discover the state of the already activated FRUs. This is similar to the behavior of an AdvancedTCA Shelf Manager when starting in a running AdvancedTCA Shelf.

Property of CERN - For Internal Use Only – External Distribution Prohibited

¶ 104 There is no Shelf-level power budget function in MicroTCA. The Shelf Manager does not participate in MicroTCA Carrier power budgeting.

¶ 105 The Shelf-Carrier Manager Interface between a remote Shelf Manager and a Carrier Manager is an IP-capable interface. This is different from AdvancedTCA, which uses IPMB-0 as the primary in-Shelf management communication interface. An RMCP session is created by the Carrier Manager to the remote Shelf Manager prior to any management commands being issued to the Carrier Manager or events being sent to the Shelf Manager. The implementation is free to choose the level of security for the RMCP session within the constraints of what is specified in the IPMI specification.

¶ 106 When a Shelf Manager is located with a Carrier Manager, the Shelf-Carrier Manager Interface is implementation-defined. The Carrier Manager and the local Shelf Manager establish the Shelf-Carrier Manager Interface during Carrier Manager startup.

¶ 107 The Shelf Manager receives platform event messages from Carrier Managers over the Shelf-Carrier Manager Interface.

¶ 108 The Shelf Manager does not provide E-Keying for the MicroTCA Carrier or for implementation-defined inter-MicroTCA Carrier connections. The Carrier Manager performs the E-Keying functions within a MicroTCA Carrier.

Requirements

REQ 3.170 Each MicroTCA Shelf **shall** be managed by a Shelf Manager, which **may** have redundant instances.

REQ 3.171 Except as noted below, each MicroTCA Shelf Manager **shall** meet all Shelf Manager requirements in Section 3.2.4 “Managed FRU operational state management” in the AdvancedTCA specification, including its subsections. References to IPM Controllers **shall** be treated as references to Carrier Managers. Each Carrier Manager represents all the FRUs, including the MCH(s), in its MicroTCA Carrier. From the point of view of these requirements, it is not relevant that the FRUs have management controllers. For instance, the Carrier Manager implements Hot Swap state machines and FRU Hot Swap Sensors for all those FRUs.

REQ 3.172 As an exception to REQ 3.171, power negotiation and E-Keying **shall** be the responsibility of the Carrier Manager.

REQ 3.173 As an exception to REQ 3.171, FRU activation and deactivation **shall** be the responsibility of the Carrier Manager, the Shelf Manager, or the System Manager, depending on the *Activation Control* or *Deactivation Control* fields, respectively, of the MicroTCA Carrier Activation and Power Management record defined in Table 3-25.

REQ 3.174 Shelf FRU Information **may** be implemented as a partition in a Carrier FRU Information device.

REQ 3.175 If the Shelf FRU Information is stored in Carrier FRU Information devices of a MicroTCA Carrier, each Shelf Manager **shall** access the individual Shelf FRU Information areas using Carrier Manager FRU Device IDs 1 and 2.

REQ 3.176 Shelf Managers **may** implement the logical Shelf FRU Information on other storage devices using their own proprietary access method.

REQ 3.177 When a new instance of the Shelf-Carrier Manager Interface is established, Shelf Managers **shall** discover the already-activated FRUs in the MicroTCA Carrier (perhaps via a review of the FRU Hot Swap Sensors and their states).

Property of CERN - For Internal Use Only – External Distribution Prohibited

REQ 3.178 After the Shelf-Carrier Manager Interface, as described in Section 3.4.3, "Shelf-Carrier Manager Interface", is established with a Carrier Manager, each Shelf Manager **shall** issue a "Set Event Receiver" to the Carrier Manager to specify the Shelf Manager as the event receiver.

REQ 3.179 In the "Set Event Receiver" message from the Shelf Manager to the Carrier Manager the *Event Receiver Slave Address* **shall** be 20h.

REQ 3.180 MicroTCA Shelf Managers **shall not** provide E-Keying for MicroTCA Carriers or implementation-defined inter-MicroTCA Carrier connections.

REQ 3.181 MicroTCA Shelf Managers **shall not** conduct any power budgeting during the Module activation process.

REQ 3.182 Shelf Managers **shall** manage the Shelf-level cooling, based on the MicroTCA Fan Geography record(s) stored in the Shelf FRU Information as specified in Section 3.9. Shelf Managers **shall** interact with a Carrier Manager for any Cooling Unit that is part of that Carrier Manager's MicroTCA Carrier.

REQ 3.183 Each Shelf Manager **should** implement the "Get Shelf Address Info" command, as defined in AdvancedTCA Section 3.2.3.4 "Shelf addressing", except that the *Shelf Address* field is found in the MicroTCA Shelf Information record as defined in Table 3-18.

REQ 3.184 If a Shelf Manager implements the "Get Shelf Address Info" command, it **shall** also implement the "Set Shelf Address Info" command.

REQ 3.185 Shelf Managers **shall** comply with the IPM Controller requirements of the AdvancedTCA specification Section 3.2, "IPM Controller", except for IPMB-0 as specified in Section 3.8, "Intelligent Platform Management Bus."

REQ 3.186 Each Shelf Manager **shall** implement a System Event Log (SEL) in accordance with the IPMI specification Section 25 "System Event Log", accessible through at least the System Manager Interface. The SEL **may** be accessible from the Shelf-Carrier Manager Interface.

REQ 3.187 Shelf Managers **shall** receive and process events from Carrier Managers over the Shelf-Carrier Manager Interface, in accordance with the IPMI specification Section 14 "Event Messages" and Section 23 "Event Commands."

REQ 3.188 Each Shelf Manager **shall** provide an SDR repository interface in accordance with the AdvancedTCA specification, Section 3.4, "Sensor Data Records."

REQ 3.189 Each Shelf Manager **shall** provide access to FRU Information for the FRU on which the Shelf Manager is implemented and any other FRUs the Shelf Manager represents, in accordance with the IPMI specification Section 28 "FRU Inventory Device Commands." This access **shall** be supported from both Shelf-Carrier Manager Interface and the System Manager Interface.

3.4.3 Shelf-Carrier Manager Interface

¶ 109 In MicroTCA, the Carrier Manager represents all entities within a MicroTCA Carrier to the Shelf Manager. The Shelf Manager communicates with the Carrier Managers in a Shelf using the Shelf-Carrier Manager Interface. The Shelf-Carrier Manager Interface replaces the IPMB-0 interface, defined in AdvancedTCA, between the AdvancedMC Carrier Board and the AdvancedTCA Shelf Manager. In this specification, the MicroTCA Shelf-Carrier Manager Interface is used as a logical IPMB between the Shelf Manager and the Carrier Managers.

Property of CERN - For Internal Use Only – External Distribution Prohibited

¶ 110 In MicroTCA, the Shelf Manager can be located with a Carrier Manager. In this case, the Shelf-Carrier Manager Interface is implementation-defined.

¶ 111 The Carrier Manager communicates with a remote Shelf Manager over an IP-capable transport, Ethernet being the most common example. The MicroTCA specification does not specify the particular method of implementation by which the Carrier Manager gets IP connectivity. Section 12 “IPMI LAN Interface” of the IPMI specification provides examples for such implementations. The IP interface of the Carrier Manager can be implemented as a dedicated interface to the front panel of the MCH or through an on-board MCH Fabric.

¶ 112 The transport protocol used for the remote Shelf-Carrier Manager Interface is defined by the Distributed Management Task Force (DMTF) and called the Remote Management Control Protocol (RMCP). This simple request-response protocol is implemented using UDP datagrams. Section 12 “IPMI LAN Interface” of the IPMI specification has additional details of RMCP and IPMI message formats over RMCP.

¶ 113 The Carrier Manager initiates the RMCP session with a remote Shelf Manager following the process specified in the IPMI specification.

¶ 114 This specification requires a Carrier Manager to function as an RMCP session client to a remote Shelf Manager RMCP session server as specified in Section 12 “IPMI LAN Interface” of the IPMI specification. The Carrier Manager is not required to provide an RMCP session server or accept RMCP session connection requests from the Shelf Manager or other entities.

Requirements

REQ 3.190 Each local Shelf Manager **shall** have a Shelf-Carrier Manager Interface to a Carrier Manager located with the local Shelf Manager. This interface **may** be implementation-defined or **may** use an IP-based RMCP interface. Implementation-defined Shelf-Carrier Manager Interfaces are outside the scope of this specification.

REQ 3.191 Each Carrier Manager without a local Shelf Manager **shall** implement an IP interface for its Shelf-Carrier Manager Interface.

REQ 3.192 Each Carrier Manager without a local Shelf Manager **shall** initiate an RMCP session over its IP interface to establish its Shelf-Carrier Manager Interface to a remote Shelf Manager.

REQ 3.193 Shelf Managers **shall** support a minimum of one active RMCP session from each MicroTCA Carrier in the Shelf.

REQ 3.194 For all IPMI messages sent from each Carrier Manager to its Shelf Manager over the Shelf-Carrier Manager Interface, the IPMB requester ID **shall** be derived by the formula 80h + (Carrier Number * 2) and the IPMB responder ID **shall** be 20h. This results in each Carrier Manager within a Shelf having a unique IPMB address over the Shelf-Carrier Manager Interface in the range of 82h to A0h.

REQ 3.195 For all IPMI messages sent from a Shelf Manager to Carrier Managers over the Shelf-Carrier Manager Interface, the IPMB requester ID **shall** be 20h, and the IPMB responder ID **shall** be derived by the formula 80h + (Carrier Number * 2).

Property of CERN - For Internal Use Only – External Distribution Prohibited

3.4.4 Shelf Manager IP address

¶ 115 IP addresses are required for the Shelf Manager to communicate with a System Manager and remote Carrier Managers. This section defines a method to specify IPv4 addresses for the Shelf Manager. The IPMI specification only supports RMCP over IPv4; therefore IPv6 addressing and usage is outside the scope of this specification.

¶ 116 Table 3-21, "MicroTCA Shelf Manager IP Link record" defines a Shelf FRU Information record that specifies two Shelf Manager IP addresses. The first IP address is used by the Shelf Manager for the RMCP interface to the System Manager and can also be used for the Shelf-Carrier Manager Interface to remote Carrier Managers. An optional second IP address can be specified for a separate network interface for the Shelf-Carrier Manager Interface to remote Carrier Managers.

Table 3-21 MicroTCA Shelf Manager IP Link record

Offset	Length	Definition
0	1	*Record Type ID*. For all records defined in this specification a value of C0h (OEM) **shall** be used.
1	1	*End of List/Version*. 7:7 – End of List. Set to one for the last record. 6:4 – Reserved. Write as 0. 3:0 – Record format version. Set to 2h for this definition.
2	1	*Record Length*.
3	1	*Record Checksum*.
4	1	*Header Checksum*.
5	3	*Manufacturer ID*. LS byte first. Write as the three byte ID assigned to PICMG. For this specification, the value 12634 (00315Ah) **shall** be used.
8	1	*PICMG Record ID*. For the MicroTCA Shelf Manager IP Link record, the value 24h **shall** be used.
9	1	*Record Format Version*. For this specification, the value 00h **shall** be used.
10	4	*Shelf Manager IP Address 0*. MS-byte first. An IPv4 address used by the Shelf Manager to listen for RMCP session creation requests from a System Manager and optionally from the Shelf-Carrier Manager Interface to remote Carrier Managers. The value 0.0.0.0 indicates Shelf Manager IP Address 0 is undefined.
14	4	*Subnet Mask 0.* MS-byte first. A mask that identifies the network (vs. host) part of the *Shelf Manager IP Address 0*. The value 0.0.0.0 indicates *Subnet Mask 0* is undefined.
18	4	*Gateway Address 0.* MS-byte first. This the IP address of the gateway (router) used when the Shelf Manager sends a message to a node on a different subnet. The value 0.0.0.0 indicates that *Default Gateway Address 0* is undefined.
22	4	*Shelf Manager IP Address 1*. MS-byte first. An optional additional IPv4 address used for the Shelf-Carrier Manager Interface by the Shelf Manager to listen for RMCP session creation requests from remote Carrier Managers. The value 0.0.0.0 indicates Shelf Manager IP Address 1 is undefined.
26	4	*Subnet Mask 1.* MS-byte first. A mask that identifies the network (vs. host) part of the *Shelf Manager IP Address 1*. The value 0.0.0.0 indicates *Subnet Mask 1* is undefined.
32	4	*Gateway Address 1.* MS-byte first. The IP address of another gateway used by the Shelf Manager. The value 0.0.0.0 indicates *Default Gateway Address 1* is undefined.

Property of CERN - For Internal Use Only – External Distribution Prohibited

¶ 117 Using a static IP address for the MicroTCA Shelf Manager is aligned with the AdvancedTCA specification for the Shelf Manager IP address. Specifying default IP addresses eases system configuration and is recommended by this specification.

Requirements

REQ 3.196 Shelf FRU Information **shall** contain a MicroTCA Shelf Manager IP Link record.

REQ 3.197 The *Shelf Manager IP Address 0* field **should** contain 192.168.16.17. This is the same default IP address defined in the AdvancedTCA specification.

REQ 3.198 The *Subnet Mask 0* field **should** contain 255.255.255.0.

REQ 3.199 Each Shelf Manager **shall** implement one or more Internet Protocol capable interfaces for communication with a System Manager.

REQ 3.200 Each Shelf Manager **shall** respond to System Manager requests to its primary RFC790 (IPv4) address. This address **shall** be identified as the *Shelf Manager IP Address 0* with *Subnet Mask 0*.

REQ 3.201 If the Shelf FRU Information is not available, Shelf Managers **shall** listen for requests from remote Carrier Managers on an implementation defined fixed IP address that **should** be 192.168.16.17 by default.

REQ 3.202 Shelf Managers **may** also listen on *Shelf Manager IP Address 0* for requests from remote Carrier Managers.

REQ 3.203 Shelf Managers **may** listen on an additional RFC790 (IPv4) address for requests from remote Carrier Managers. This address **shall** be identified as the *Shelf Manager IP Address 1* with *Subnet Mask 1*.

3.5 MCMC requirements

¶ 118 The MicroTCA Carrier Management Controller (MCMC) resides on the MicroTCA Carrier Hub (MCH). There may be redundant MCHs, each with an MCMC. The MCMC handles management controller responsibilities for the MCH including, for instance, local sensors such as temperature and E-Keying for the MCH Fabrics. The MCMC implements the MCH's connection to IPMB-0 and IPMB-L.

¶ 119 When an MCH is inserted in a MicroTCA Carrier, prior to the Carrier Manager starting, the PM which has autonomous mode enabled for the MCH Power Channel, enables Management Power and then asserts ENABLE# to the MCH. The MCH can then assert its PWR_ON signal when its ejector switch is closed. This active high signal is detected by the PM with autonomous mode enabled, which then enables Payload Power to the respective MCH. PMs ignore the PWR_ON signal, once Payload Power is enabled, to allow the FRU deactivation process to control when to disable Payload Power to an MCH.

Requirements

REQ 3.204 Each MCH **shall** implement a MicroTCA Carrier Management Controller (MCMC).

REQ 3.205 Each MCH, upon insertion, **shall** assert its PWR_ON signal only after its ejector switch is closed, to autonomously get Payload Power.

REQ 3.206 MCHs and their MCMCs **shall** comply with all the Module requirements, including but not limited to the sub-sections "BLUE LED", "Module Handle", and "Module Hot

Property of CERN - For Internal Use Only – External Distribution Prohibited

Swap Sensor", as specified in Section 3, "Module management" of the AdvancedMC Base specification, except as specified in this specification.

REQ 3.207 MCMCs **shall** support all commands in Table 3-46, "Command number assignments and requirements" in the column titled MCMC Req and identified as mandatory.

REQ 3.208 MCMCs **shall** provide a watchdog timer strobed by the MCMC.

REQ 3.209 MCMCs **should** implement an external watchdog as specified in Section 3.2.4.6.3 "External watchdog timer reset" of the AdvancedTCA specification.

REQ 3.210 The watchdog timer **shall** reset its MCMC if it is not strobed.

REQ 3.211 If the watchdog timer resets its MCMC, its MCH Payload state **shall not** be impacted.

REQ 3.212 To communicate with AdvancedMCs, MCMCs **shall** implement IPMB-L, as described in Section 3.2.1, "AdvancedMC interconnects".

REQ 3.213 IPMB-L, IPMB-0, I2C_SDA, I2C_SCL and TMREQ# signals on MCHs **shall** be kept high impedance and isolated until enabled by the MCMC or Carrier Manager.

REQ 3.214 When an MCMC watchdog timer resets its MCMC, the IPMB-L, IPMB-0, I2C_SDA, I2C_SCL and TMREQ# signals on the MCMC's MCH **shall** be set to the high impedance and isolated state until enabled by the MCMC or Carrier Manager. The intent is for a MCMC watchdog reset hardware to force the state of these signals to their initial power on state until enabled by the MCMC or Carrier Manager.

REQ 3.215 IPMB-L, as implemented by each MCH, **shall** comply with IPMB-L requirements as specified in Section 3.2.4 "IPMB-L" and Section 3.5 "Carrier hardware requirements for management" of the AMC.0 specification.

REQ 3.216 As an exception to REQ 3.215, due to the potentially long traces of the radially implemented IPMB-L in a MicroTCA Carrier, the MCH **shall** ensure that each IPMB-L branch is capacitively isolated from the other branches. One way to accomplish this is to use a specialized I^2C buffer, such as the Linear Technology LTC4300A device, as the isolator for each branch.

REQ 3.217 As an exception to REQ 3.215, in MicroTCA, each MCH **shall** provide a pull-up resistor to Management Power on the backplane side of the isolators for each IPMB-L branch's signal. The value of the pull-up **shall** be selected such that the SCL_L or SDA_L signal can transition from 0.99 V to 2.31 V with a maximum capacitance of 220 pF in 1 microsecond and such that the total sink current does not exceed 2 mA. If a buffer with a rise time accelerators is used, the pull-up resistor **shall** ensure enough current to trigger the accelerator on. In redundant implementations, MCHs **shall** ensure that each IPMB-L branch has a pull-up provided by only one MCH at any given time.

REQ 3.218 MCMCs **shall not** autonomously enable isolators to IPMB-L. Only Carrier Managers **may** enable isolators to IPMB-L. See REQ 3.75 for additional information.

REQ 3.219 To communicate with the Carrier Manager, PMs, CUs and OEM Modules, each MCMC **shall** implement an IPMB-0 interface.

REQ 3.220 IPMB-0, as implemented by each MCMC, **shall** comply with IPMB-0 requirements as specified in Section 3.8 "Intelligent Platform Management Bus" of the AdvancedTCA specification, except that in MicroTCA, each MCH **shall** implement IPMB-0 pull-ups. In redundant implementations, MCHs **shall** ensure that only one pull-up is active on each IPMB-A and IPMB-B signal.

REQ 3.221 Carrier Managers **may** use an implementation-defined interface for IPMI messages to an MCMC for an MCH running the Carrier Manager.

Property of CERN - For Internal Use Only – External Distribution Prohibited

3.6 EMMC requirements

¶ 120 PMs, CUs and OEM Modules have EMMCs which behave as MMCs, except they are connected to IPMB-0 instead of IPMB-L. Otherwise, all AdvancedMC MMC requirements are directly applicable to EMMCs. Where specific capabilities required on EMMCs are either not present or insufficient in the AdvancedMC Base specification, the requirements in this specification take precedence.

Requirements

REQ 3.222 Modular MicroTCA Carrier implementations **shall** comply with the following EMMC requirements; however, non-modular MicroTCA Carrier power, cooling, and OEM functions **may** be part of the MCMC or another implementation-defined management controller.

REQ 3.223 CUs, PMs and their EMMCs **shall** comply with all the Module requirements, including but not limited to the sub-sections “BLUE LED”, “Module Handle”, and “Module Hot Swap Sensor”, as specified in Section 3, “Module management” of the AdvancedMC Base specification, except as specified in this specification.

REQ 3.224 The Hot Swap Switch implementation on PMs and CUs **shall** indicate the intent to extract the PM or CU, and **may** indicate insertion complete. The intent is to require Hot Swap Switch notification for extraction and not require Hot Swap Switch notification during insertion, to permit CU and PM implementations with only an extraction request button.

REQ 3.225 PM, CU and OEM Modules **shall** contain an EMMC that **shall** comply with MMC requirements as specified in Section 3.11.1 “Module SDR requirements” and Section 3.12.1.2 “MMC requirements” of the AMC.0 specification, except for IPMB-L, E-Keying, and Entity ID.

REQ 3.226 EMMCs **shall** implement IPMB-0 instead of IPMB-L, as described in Section 3.8 “Intelligent Platform Management Bus” of the AdvancedTCA specification.

REQ 3.227 PM EMMCs **shall** comply with the requirements defined in Section 3.8, “Power management” of this specification.

REQ 3.228 CU EMMCs **shall** comply with the requirements defined in Section 3.9, “Cooling management” of this specification.

REQ 3.229 EMMCs **shall** provide a watchdog timer strobed by the EMMC. The watchdog timer **shall** reset the EMMC if it is not strobed.

REQ 3.230 EMMCs **should** implement an external watchdog as specified in Section 3.2.4.6.3 “External watchdog timer reset” of the AdvancedTCA specification.

REQ 3.231 When an EMMC watchdog timer resets its EMMC, the IPMB-0 signals on the EMMC Module **shall** be set to the high impedance and isolated state until enabled by the EMMC.

REQ 3.232 If the watchdog timer, de-assertion of ENABLE# or a command resets the CU or OEM Module EMMC, the state of the main function of the CU or OEM Module **should not** be impacted. Other FRUs supported by the main function of the CU or OEM Module **should not** be impacted.

REQ 3.233 Watchdog resets of the PM EMMC and resets via “Cold Reset” or “Warm Reset” commands **shall not** affect the state of Power Channels.

Property of CERN - For Internal Use Only – External Distribution Prohibited

REQ 3.234 The RST_PM_IN# input as defined in Section 4.6.5.4.2 **shall** reset the PM EMMC, disable all Power Channels, de-assert PWR_OK and reset the PM to its initial power on state, without reliance on the PM EMMC.

3.7 Operational state management

¶ 121 In MicroTCA, MMCs participate in FRU state transitions just as in AdvancedTCA Carrier Boards. In contrast, significant differences exist between MicroTCA Carrier Managers and AdvancedTCA Carrier IPM Controllers with respect to power management and functional requirements. The following discussion explains these implications with respect to the MicroTCA environment.

3.7.1 Carrier Manager start up

¶ 122 When the external power source is applied to the PMs in the MicroTCA Carrier, the power-up sequence starts. As soon as a Startup PM is designated, it powers up the CUs and MCHs.

¶ 123 In a MicroTCA Carrier with redundant MCHs, an election is performed by the two MCMCs and the Carrier Manager is chosen based on an implementation-defined election process. After election, the Carrier Manager is responsible for managing the MicroTCA Carrier. The Carrier Manager collects management information from three sources: the MCMC FRU Information, the Carrier FRU Information, and Module FRU Information.

¶ 124 The Carrier Manager initializes the M-state for FRUs previously activated, such as, but not limited to PMs, CUs and MCHs. The Carrier Manager then activates Modules specified for Carrier Manager activation in the Carrier FRU Information.

¶ 125 Next, the Carrier Manager establishes the Shelf-Carrier Manager Interface with the Shelf Manager.

3.7.2 Shelf Manager actions on Carrier detection

¶ 126 When a Shelf-Carrier Manager Interface is established, the Shelf Manager begins the process of MicroTCA Carrier discovery. First, it reads the Carrier FRU Information from the Carrier Manager.

¶ 127 The Shelf Manager discovers all the FRUs and their current Hot Swap states. The Shelf Manager activates Modules that are ready for activation and are specified for Shelf Manager activation in the Carrier FRU Information.

3.7.3 Normal Shelf operation

¶ 128 During normal Shelf operation, the Shelf Manager and Carrier Manager facilitate the activation process as Modules are inserted and extracted. MicroTCA operational state management follows the M-states model defined in the AdvancedTCA Base specification. All the FRU devices including the MCH, PM, CU, and AdvancedMCs meet the requirements for operational state management. In most cases, the condition that triggers operational state transitions is an insertion or extraction of a Module by the operator.

Property of CERN - For Internal Use Only – External Distribution Prohibited

¶ 129 Normal Module insertion/extraction operation follows the procedure specified in the AMC.0 Base specification. There are no additional requirements for AdvancedMC implementations in MicroTCA. Refer to Section 3.6.1, “Typical Module insertion” and Section 3.6.2, “Typical Module extraction” in the AMC.0 specification for the operating steps and process.

3.7.4 Abnormal situation handling

¶ 130 Some events call for other than normal operation. These abnormal situations include lost communication or unexpected Module removal from the Shelf.

¶ 131 In the MicroTCA Carrier, the Carrier Manager can lose communication with a FRU. If this happens, the Carrier Manager does not remove the Payload Power to the FRU, because this may be only a communication interface failure and other parts of the FRU can still be functioning. The Carrier Manager transitions the FRU to M7, and optionally isolates IPMB-L. If communication is regained, the Carrier Manager restores the FRU state from its previous state.

¶ 132 When a FRU is removed unexpectedly, as indicated by PS1# de-assertion, the Primary PM and Redundant PM for the FRU disables the Power Channel, while the Carrier Manager transitions the FRU to M0 and disables the E-Keying governed Links involving that FRU.

3.8 Power management

¶ 133 Section 4, “Power” outlines the requirements of MicroTCA Carrier power distribution from the hardware perspective. Power is distributed to the AdvancedMCs, CUs, MCHs and possibly OEM Modules, either directly from the Power Modules (PM) or from an aggregated Power Distribution Module (PDM). In the PDM model, the PDM’s EMMC represents the Bulk Power Supplies connected to the PDM. The implementation of the PDM is outside the scope of this specification. This specification assumes that the PM functions and requirements are met by the PDM and does not distinguish them. Therefore, this section refers only to the PM, with the assumption that the Power Distribution Module meets the PM requirements for power management.

¶ 134 A star topology-based, Power Channel interconnection Backplane is required for the MicroTCA Carrier. The Carrier Manager interacts with the EMMCs on the PMs to manage the power distribution within the MicroTCA Carrier.

¶ 135 The MicroTCA Carrier power management process can be divided into two stages: early power and normal power. The early power stage starts from the moment the external power is applied to the PM; and it ends when the Carrier Manager takes over power management.

¶ 136 During the early power stage, the Power Subsystem selects the Startup PM. The Startup PM operates in autonomous mode for certain Power Channels. The autonomous mode automatically provides Management Power, asserts ENABLE#, and provides Payload Power to CU(s) and conditionally to MCH(s) that are present.

¶ 137 After the MCH(s) are powered-up and fully initialized, the Carrier Manager is elected and power management enters the normal stage. In the normal stage, the Carrier Manger performs all power enable decisions, and the PMs do not autonomously enable power to any modules. After being elected, the Carrier Manager first reads power information from the Carrier FRU

Property of CERN - For Internal Use Only – External Distribution Prohibited

Information and all the Modules. Based upon the FRU Information data and the PM status, the Carrier Manager determines PM roles for each Power Channel and the maximum available Payload Power from each PM.

3.8.1 Power Channel mapping

¶ 138 Each FRU is connected to the Power Subsystem via a Power Channel. A Power Channel consists of Management Power, Payload Power, PS1#, and ENABLE# connections. Two Power Channels also have a PWR_ON connection. Table 3-22, "Power Channel mapping" lists the relationships between Power Channel numbers and PM connections.

Table 3-22 Power Channel mapping

Power Channel	Management Power	Payload Power	PS1#	ENABLE#	Autonomous Power
1 - 2	MP_MCH1 - MP_MCH2	PP_MCH1 - PP_MCH2	PS1_MCH1# - PS1_MCH2#	EN_MCH1# - EN_MCH2#	Depends on PWR_ON1 - PWR_ON2
3 - 4	MP_CU1 - MP_CU2	PP_CU1 - PP_CU2	PS1_CU1# - PS1_CU2#	EN_CU1# - EN_CU2#	Yes
5 - 16	MP_1 - MP_12	PP_1 - PP_12	PS1_1# - PS1_12#	EN_1# - EN_12#	No

Requirements

REQ 3.235 MicroTCA Carrier Backplanes **shall** implement a star topology for Payload Power interconnections from each PM to each power load in accordance with Table 3-22, "Power Channel mapping." Each PM **shall** be able to provide Payload Power to any power load within the MicroTCA Carrier.

REQ 3.236 MicroTCA Carrier Backplanes **shall** implement a star topology for Management Power interconnections from each PM to each power load in accordance with Table 3-22.

REQ 3.237 MicroTCA Carrier Backplanes **shall** implement a star topology for PS1# interconnections from each PM to each power load in accordance with Table 3-22.

REQ 3.238 MicroTCA Carrier Backplanes **shall** implement a star topology for ENABLE# interconnections from each PM to each power load in accordance with Table 3-22.

REQ 3.239 If implemented, Power Channels 1 and 2 **shall** support autonomous mode control for Management Power, ENABLE#, and Payload Power based on PWR_ON1 and PWR_ON2 respectively. See REQ 3.267 through REQ 3.272 for detailed requirements.

REQ 3.240 If implemented, Power Channels 3 and 4 **shall** provide autonomous mode control for Management Power, ENABLE#, and Payload Power. See REQ 3.267 through REQ 3.272 for detailed requirements.

REQ 3.241 If implemented, Power Channels 5 – 16 **shall not** provide any autonomous mode control of Management Power, ENABLE#, or Payload Power. Only the Carrier Manager **shall** control these Power Channels.

REQ 3.242 MCH Power Channels **may** be connected to non-MCH Slots. If an MCH Power Channel is connected to a non-MCH Slot, the FRUs used in the connected Slot **shall** support the PWR_ON signal to indicate whether or not a PM provides Payload Power at system startup or in the absence of a healthy Carrier Manager. Connecting the PWR_ON signal to Ground is one example of support for such an implementation. If

Property of CERN - For Internal Use Only – External Distribution Prohibited

the PWR_ON signal is unconnected, a PM that has autonomous mode enabled does not automatically provide Payload Power to that Power Channel.

REQ 3.243 CU Power Channels **may** be connected to non-CU Slots that require autonomous mode Power Channel control from the PMs at system startup or in the absence of a healthy Carrier Manager. The intent is to permit OEM Modules to use CU Power Channels and have the Power Channel enabled based on PS1# by a PM with autonomous mode enabled for the Power Channel.

REQ 3.244 AdvancedMC Power Channels **may** be connected to non-AdvancedMC Slots that do not require autonomous mode Power Channel control from the PMs at system startup or in the absence of a healthy Carrier Manager. The intent is to permit OEM Modules to use extra Power Channels in a MicroTCA Carrier.

3.8.2 MicroTCA Carrier Power Management records

¶ 139 The MicroTCA Carrier power management information includes Module activation guidance and the maximum Power Channel current that can be routed to each load by the Backplane. The power management information also includes the maximum power requirement of every power load. FRU Information records are defined to store this information.

3.8.2.1 MicroTCA Carrier Power Policy record

¶ 140 Table 3-23 describes the power management information for the MicroTCA Carrier. The MicroTCA Carrier Power Policy record specifies the *Maximum Current Override* and recommends Primary/Redundant roles and preferences for Power Channel allocation to each PM.

Table 3-23 MicroTCA Carrier Power Policy record

Offset	Length	Definition
0	1	*Record Type ID*. For all records defined in this specification a value of C0h (OEM) **shall** be used.
1	1	*End of List/Version*. 7:7 – End of List. Set to one for the last record. 6:4 – Reserved. Write as 0. 3:0 – Record format version. Set to 2h for this definition.
2	1	*Record Length*.
3	1	*Record Checksum*.
4	1	*Header Checksum*.
5	3	*Manufacturer ID*. LS byte first. Write as the three byte ID assigned to PICMG. For this specification, the value 12634 (00315Ah) **shall** be used.
8	1	*PICMG Record ID*. For the MicroTCA Carrier Policy record, the value 25h **shall** be used.
9	1	*Record Format Version*. For this specification, the value 00h **shall** be used.
10	1	*Number of PMs*. This field specifies the number of PMs (N) defined in this record.
11	variable	*Power Policy Descriptors.* An array of descriptors with one for each PM. The size varies depending on the number of PMs (N) and the number of Power Channel feeds (C) to each PM. The format is described in Table 3-24, "MicroTCA Carrier Power Policy descriptor."

Property of CERN - For Internal Use Only – External Distribution Prohibited

Table 3-24 MicroTCA Carrier Power Policy descriptor

Offset	Length	Definition
0	1	*PM Site Number.* Identifies the PM described in this descriptor.
1	2	*Maximum Current Override.* LS Byte first. This field optionally defines maximum available Payload Power, in 1/10th Amps, that the PM is restricted to deliver, due to external power source, cabling, power supply efficiency, or other constraints. A value of FFFFh **shall** indicate that no such restriction has been set.
3	1	*PM Role.* 00h = Primary PM 01h = Redundant PM FFh = PM Role is not specified All other values are reserved.
4	1	*Power Channel Count*. This field contains a count of the number of Power Channels listed in this descriptor (C).
(5)	C	*Power Channel Array.* This is an optional array of Power Channel numbers with one for each Power Channel that is preferred to be powered from this PM.

¶ 141 The *Maximum Current Override* field optionally limits the maximum available Payload Power from the PM due to external constraints such as cabling, external power limitations, and power supply efficiency. When the Carrier Manager calculates the maximum available Payload Power from the PM, the maximum available Payload Power from this PM cannot exceed this value.

¶ 142 The *PM Role* field optionally specifies if a PM is preferred to be a Primary or the Redundant PM.

¶ 143 The optional *Power Channel Array* specifies the preferred Power Channels to which a PM provides Payload Power.

¶ 144 This power policy information is specified by the system integrator; Carrier Managers can choose to follow these policies to manage the Power Subsystem.

Requirements

REQ 3.245 Carrier FRU Information **should** contain one MicroTCA Carrier Power Policy record as defined in Table 3-23.

REQ 3.246 When the Carrier Manager initializes the maximum available Payload Power for each PM, that value for a given PM **shall not** exceed the corresponding *Maximum Current Override* value defined in the MicroTCA Carrier Power Policy record.

REQ 3.247 Carrier Managers **should** assign Primary and Redundant PM roles and Power Channels in accordance with the desired assignment from the MicroTCA Carrier Power Policy record. Carrier Managers **may** deviate from desired assignments due to practical constraints or other considerations.

Property of CERN - For Internal Use Only – External Distribution Prohibited

3.8.2.2 MicroTCA Carrier Activation and Power Management record

¶ 145 Table 3-25 describes the Module activation sequence, as well as the *Maximum Channel Current* that the Backplane is capable of delivering to the Module.

¶ 146 The Carrier Manager is responsible for determining a Module's current requirement from its FRU Information and validating it against the *Maximum Channel Current* data defined in the MicroTCA Carrier FRU Activation and Power Management record. The current delivered to the Module cannot exceed the *Maximum Channel Current*.

Table 3-25 MicroTCA Carrier Activation and Power Management record

Offset	Length	Definition
0	1	*Record Type ID*. For all records defined in this specification a value of C0h (OEM) **shall** be used.
1	1	*End of List/Version*. 7:7 – End of List. Set to one for the last record. 6:4 – Reserved. Write as 0. 3:0 – Record format version. Set to 2h for this definition.
2	1	*Record Length*.
3	1	*Record Checksum*.
4	1	*Header Checksum*.
5	3	*Manufacturer ID*. LS byte first. Write as the three byte ID assigned to PICMG. For this specification, the value 12634 (00315Ah) **shall** be used.
8	1	*PICMG Record ID*. For the MicroTCA Carrier Activation and Power Management record, the value 26h **shall** be used.
9	1	*Record Format Version*. For this specification, the value 00h **shall** be used.
10	1	*Allowance for Module Activation Readiness.* This field contains the number of seconds after Carrier Manager start-up that Modules have to transition to state M3 and maintain their power-up sequence position.
11	1	*Module Activation and Current Descriptor Count*. This contains a count of the number of entries (M) in this record.
12	M*6	*MicroTCA Carrier Activation and Current Descriptors*. This is an array of activation and current descriptors for each AdvancedMC, MCH, PM, CU and OEM Module implemented on the MicroTCA Carrier. Each descriptor is 6 bytes in size and follows the format found in Table 3-26.

Property of CERN - For Internal Use Only – External Distribution Prohibited

Table 3-26 MicroTCA Carrier Activation and Current Descriptor

Offset	Length	Definition
0	1	*Site Type.* See Table 3-14 for valid *Site Type* values.
1	1	*Site Number.* This field, when combined with the *Site Type*, forms a MicroTCA Carrier Local Address of the FRU.
2	1	*Power Channel Number.* This field specifies the Power Channel to which the corresponding FRU is connected.
3	1	*Maximum Channel Current.* This field contains the maximum Payload Power current, in tenths of Amps, that can be routed to the Module identified by MicroTCA Carrier Local Address. The power connector pin as well as Backplane trace implementation determine this maximum current.
4	1	This field contains activation and power configuration parameters for the Module identified by MicroTCA Carrier Local Address. [7:6] - *Activation Control.* 11b = Reserved 10b = The Shelf Manager activates this FRU automatically, the FRU M-state transitions to M3 when the Carrier Manager receives the “Set FRU Activation (Activate)” command from the Shelf Manager 01b = The Carrier Manager activates this FRU, and it proceeds to M3 00b = The System Manager activates this FRU, the FRU M-state remains in M2 until the Carrier Manager receives the “Set FRU Activation (Activate)” command from the System Manager [5:0] - *Delay Before Next Power On*. Tenths of a second to delay before powering up any other FRU after powering this FRU.
5	1	This field contains deactivation configuration parameters for the Module identified by MicroTCA Carrier Local Address. [7:6] - *Deactivation Control*. 11b = Reserved 10b = The Shelf Manager deactivates this FRU automatically, the FRU M-state transitions to M6 when the Carrier Manager receives the “Set FRU Activation (Deactivate)” command from the Shelf Manager. 01b = The Carrier Manager deactivates this FRU, and it proceeds to M6 00b = The System Manager deactivates this FRU, the FRU M-state remains in M5 until the Carrier Manager receives the “Set FRU Activation (Deactivate)” command from the System Manager [5:0] - Reserved.

Requirements

REQ 3.248 Carrier FRU Information **shall** contain at least one MicroTCA Carrier Activation and Power Management record.

REQ 3.249 If the Carrier FRU Information contains more than one MicroTCA Carrier Activation and Power Management record, when determining the order of the MicroTCA Carrier Activation and Current Descriptors in the initial power up sequence, the FRUs associated with the descriptors from the records that are earlier in the Carrier FRU Information **shall** be powered on earlier than the FRUs described in later records.

REQ 3.250 Carrier FRU Information **shall** contain a MicroTCA Carrier Activation and Current Descriptor as defined in Table 3-26 for each Module (AdvancedMC, MCH, PM, OEM, and CU) implemented by the MicroTCA Carrier.

REQ 3.251 If implemented, PM, CU and MCH MicroTCA Carrier Activation and Current Descriptors **shall** appear in the MicroTCA Carrier Activation and Power Management

Property of CERN - For Internal Use Only – External Distribution Prohibited

record before the AdvancedMC descriptors. The PM descriptors **should** appear first followed by the CU descriptors and then the MCH descriptors.

REQ 3.252 For each FRU previously activated during power-up sequencing, Carrier Managers **shall** set each FRU's Hot Swap Sensor state to M4 if the FRU's Hot Swap Switch is closed and M5 if the FRU's Hot Swap Switch is open. Carrier Managers **shall** then generate FRU Hot Swap events for each previously activated FRU, with *Previous State* set to one less than the *Current State*. For example if *Current State* is M4 then *Previous State* is M3.

REQ 3.253 Each MicroTCA Shelf Manager **shall** read and use the *Activation Control* field in each MicroTCA Carrier Activation and Current Descriptor (see Table 3-26) to determine whether it **shall** or **shall not** activate the corresponding FRU when it is in the M2 state.

REQ 3.254 Each MicroTCA Shelf Manager **shall** read and use the *Deactivation Control* field in each MicroTCA Carrier Activation and Current Descriptor (see Table 3-26) to determine whether it **shall** or **shall not** deactivate the corresponding FRU when it is in the M5 state.

REQ 3.255 Each Carrier Manager **shall** use the order of the MicroTCA Carrier Activation and Current Descriptors (see Table 3-26) to determine the power sequencing of the Modules it hosts.

REQ 3.256 Each Carrier Manager **shall** read and use the *Activation Control* field in each MicroTCA Carrier Activation and Current Descriptor (see Table 3-26) to determine whether it **shall** or **shall not** activate the corresponding FRU when it is in the M2 state.

REQ 3.257 Each Carrier Manager **shall** read and use the *Deactivation Control* field in each MicroTCA Carrier Activation and Current Descriptor (see Table 3-26) to determine whether it **shall** or **shall not** deactivate the corresponding FRU when it is in the M5 state.

REQ 3.258 During power-up sequencing, if a FRU is present, as indicated by reading PS1#, and not in state M3 when the Carrier Manager starts processing its MicroTCA Carrier Activation and Current Descriptor entry, Carrier Managers **shall** wait for the earlier of: 1) the FRU transitions to M3 or 2) *Allowance for FRU Activation Readiness* seconds after initial system startup, as specified in the Table 3-25.

REQ 3.259 After the allowance period, if a FRU is present and not in M3 when its descriptor is processed, Carrier Managers **shall** proceed to the next descriptor without waiting for that FRU to reach M3.

REQ 3.260 If several MicroTCA Carrier Activation and Power Management records are present, the allowance period from the first of these records **shall** be used.

REQ 3.261 Carrier Managers **shall** wait for *Delay Before Next Power On* tenths of a second before it enables power for the next FRU in the power-up sequence of the MicroTCA Carrier.

REQ 3.262 Carrier Managers **shall** check that the power requested by a FRU can be routed to it by confirming that *Maximum Channel Current* is greater than *Current Draw* for that FRU.

3.8.2.3 Power Module Capability record

¶ 147 Each PM's FRU Information contains a Power Module Capability record. The Carrier Manager reads this record from the PM FRU Information during MicroTCA Carrier initialization. Based upon the *Maximum Current Output* of this record and *Maximum Current Override* of the MicroTCA Carrier Power Policy record, the Carrier Manager determines the maximum available Payload Power of the PM by selecting the lesser of the two values. The

Property of CERN - For Internal Use Only – External Distribution Prohibited

maximum available Payload Power is decreased when the Carrier Manager allocates power from a PM for a new power load during Module activation and increased when each Module is deactivated.

¶ 148 Table 3-27 describes the fields of the Power Module Capability record.

Table 3-27 Power Module Capability record

Offset	Length	Definition
0	1	*Record Type ID*. For all records defined in this specification a value of C0h (OEM) **shall** be used.
1	1	*End of List/Version*. 7:7 – End of List. Set to one for the last record. 6:4 – Reserved. Write as 0. 3:0 – Record format version. Set to 2h for this definition.
2	1	*Record Length*.
3	1	*Record Checksum*.
4	1	*Header Checksum*.
5	3	*Manufacturer ID*. LS byte first. Write as the three byte ID assigned to PICMG. For this specification, the value 12634 (00315Ah) **shall** be used.
8	1	*PICMG Record ID*. For the Power Module Capability record, the value 27h **shall** be used.
9	1	*Record Format Version*. For this specification, the value 00h **shall** be used.
10	2	*Maximum Current Output*. LS-byte first. This field holds the maximum Payload Power current output from the supply, in 1/10 of Amps.

Requirements

REQ 3.263 Carrier Managers **shall** read the Power Module Capability record from each PM FRU Information during the PM discovery phase.

REQ 3.264 Carrier Managers **shall** compute the initial maximum available Payload Power of each PM as the lower of *Maximum Current Output* or *Maximum Current Override* of that PM.

REQ 3.265 If a redundant power configuration is implemented in the Power Subsystem, Carrier Managers **shall** compute the initial maximum available Payload Power of each PM as the lower of the previously computed initial maximum available Payload Power of each PM, based on REQ 3.264, or the Redundant PM's *Maximum Current Output* or *Maximum Current Override*.

REQ 3.266 Carrier Managers **shall** update each Primary PM's initial maximum available Payload Power by subtracting the sum of *Current Draw* of all Modules already powered by that PM from the initial maximum available Payload Power of that PM.

3.8.3 Early power management

¶ 149 The PMs are powered up ahead of other Modules in the MicroTCA Carrier. After the PM EMMCs are powered up and initialized, the first PM ready to provide power is elected the Startup PM. The Startup PM assumes autonomous mode for CU and MCH Power Channels. Each Power Channel in autonomous mode, which has PS1# asserted, is provided Management Power, followed by the assertion of ENABLE# and then conditionally provided

Property of CERN - For Internal Use Only – External Distribution Prohibited

Payload Power by the PM currently providing autonomous mode control to that Power Channel. Cooling Unit Power Channels get Payload Power based on PS1#, while MCH Power Channels are provided Payload Power based on PWR_ON and PS1#. Then the PMs wait for the Carrier Manager to configure each PM's role.

¶ 150 Autonomous Power Channel mode is disabled in all PMs once the Carrier Manger starts up, as indicated by the "PM Heartbeat" command. If the Carrier Manager fails or the MCH with the Carrier Manager is extracted, the Primary PM for each CU and MCH Power Channel assumes autonomous Power Channel mode, for those Power Channels. AdvancedMC Power Channels are never autonomous Power Channels, however no Power Channels are disabled or otherwise disturbed, when the MCH is extracted or the Carrier Manager fails to keep sending the "PM Heartbeat" command.

Requirements

REQ 3.267 When a MicroTCA Carrier is powered-up, the Power Subsystem **shall** select the first PM that is ready to provide power as the Startup PM. The Startup PM **shall** enable autonomous mode on CU Power Channels (3 and 4) and the MCH Power Channels (1 and 2) that are present in the MicroTCA Carrier.

REQ 3.268 If a PM has autonomous mode enabled for a given Power Channel, the PM **shall** autonomously enable Management Power and then assert ENABLE# if PS1# for that channel is asserted.

REQ 3.269 If a PM has autonomous mode enabled for a given CU Power Channel (3 or 4), the PM **shall** autonomously enable Payload Power to this Power Channel after asserting ENABLE# to the corresponding Module.

REQ 3.270 If a PM has autonomous mode enabled for a given MCH Power Channel (1 or 2), the PM **shall** autonomously enable Payload Power to this Power Channel after asserting ENABLE# to the corresponding Module, but only if that Module is asserting PWR_ON.

REQ 3.271 Once Payload Power is enabled, PMs **shall not** treat de-assertion of PWR_ON as a reason to disable Payload Power to the MCH Power Channels (1 and 2).

REQ 3.272 If a PM has autonomous mode enabled for multiple Power Channels, the PM **shall** autonomously enable Payload Power to present Modules on the CU Power Channels before autonomously enabling Payload Power to present Modules on the MCH Power Channels.

REQ 3.273 Upon detection of PS1# de-assertion from a FRU Slot, the PMs **shall** disable Payload Power, de-assert ENABLE#, and disable Management Power to the FRU Slot, with no need for any explicit command from the Carrier Manager. This behavior is required regardless of whether the PM has autonomous mode enabled or not.

3.8.4 Normal power management

¶ 151 During normal operation, the Carrier Manager manages and controls power to the Modules for the MicroTCA Carrier. The Carrier Manager's power management function includes collecting power-related information from the MicroTCA Carrier elements, as well as allocating and freeing allocated power for Modules from the PM's maximum available Payload Power.

Property of CERN - For Internal Use Only – External Distribution Prohibited

¶ 152 The Carrier Manager reads the MicroTCA Carrier Power Policy and MicroTCA Carrier Activation and Power Management records from the Carrier FRU Information device. The power policy information includes *Maximum Current Override*, as well as desired PM roles and Power Channel assignments.

¶ 153 The Carrier Manager determines each PM's role as either redundant or primary based on the MicroTCA Carrier Power Policy information obtained from the Carrier FRU Information. The Carrier Manager configures the Power Channels of each PM as primary, redundant or disabled.

¶ 154 The Carrier Manager periodically sends each PM the "PM Heartbeat" command to keep autonomous Power Channel control of the CU and MCH Power Channels disabled.

¶ 155 The Carrier Manager reads the Power Module Capability record from each PM's FRU Information to obtain the *Maximum Current Output* for that PM. The Carrier Manager determines the maximum power of each Primary and Redundant PM by comparing its *Maximum Current Output* and *Maximum Current Override.* The lesser of the two values is used as the initial maximum available Payload Power for that PM.

¶ 156 The Carrier Manager reads the Module Current Requirement record from AdvancedMC, CU and MCMC FRU Information to obtain *Current Draw.* The Carrier Manager calculates the actual maximum available Payload Power for each PM by subtracting the sum of *Current Draw* of the power loads already assigned to that PM from its maximum available Payload Power.

¶ 157 The Carrier Manager collects from the MicroTCA Carrier Power Policy record the desired assignments of power loads to the Power Channels of primary and Redundant PMs.

¶ 158 The PM EMMCs send Power Channel Notification events to the Carrier Manager. The Carrier Manager maintains Power Channel status based on these events. The Carrier Manager also takes action based on changes in Power Channel status.

¶ 159 The Carrier Manager performs the following power management process for each FRU that is in the M3 state:

1. The Carrier Manager reads the Module Current Requirement record from the Module's FRU Information to obtain *Current Draw.*
2. The Carrier Manager allocates power to the FRU if the Module's Current Draw is less than *Maximum Channel Current* specified in the MicroTCA Carrier Activation and Current Descriptors. If the power for the Module is in range, then the Carrier Manager recalculates the maximum available Payload Power by subtracting *Current Draw* from the selected PM's maximum available Payload Power.
3. To enable the Payload Power to the Module, the Carrier Manager issues a "Power Channel Control (Enable Payload Power)" command to the Primary Power Module. Table 3-28, "Power Channel Control command" provides a detailed description of the command.
4. If the Power Subsystem is configured with a Redundant PM, the Redundant PM is enabled by the Carrier Manager issuing a "Power Channel Control" command to it with "Enable Payload Power", *Redundant PM* set to the Redundant PM Site Number, and *Primary PM* set to the Primary PM Site Number.

¶ 160 When a Module is deactivated (by the Carrier Manager or as a result of a command from the Shelf/System Manager), the Carrier Manager starts the power-off sequence for the Module, as described in the following steps:

Property of CERN - For Internal Use Only – External Distribution Prohibited

1. To disable the Payload Power, the Carrier Manager issues a “Power Channel Control” command with the “Disable Payload Power” option to the Redundant PM if a redundant power configuration is implemented.
2. The same command is sent to the Primary PM to disable the Payload Power.
3. The Carrier Manager recalculates the maximum available Payload Power by adding the *Current Draw* to the maximum available Payload Power of the PM.

Requirements

REQ 3.274 Carrier Managers **shall not** enable a Module's Payload Power unless the Module's Management Power status is good.

REQ 3.275 Before enabling Payload Power to any Module, the Carrier Manager **shall** determine if the assigned Primary PM’s maximum available Payload Power is greater than the Module’s *Current Draw.* If there is enough power available for the Module, then the Carrier Manager **shall** update the assigned Primary PM’s maximum available Payload Power by subtracting the Module’s *Current Draw* from the PM’s maximum available Payload Power and enable Payload Power to the Module. See REQ 3.265 for details of computing a PM’s initial maximum available Payload Power.

REQ 3.276 When disabling a Module’s Payload Power, Carrier Managers **shall** update the assigned PM’s maximum available Payload Power by adding the Module’s *Current Draw* to that PM’s maximum available Payload Power.

REQ 3.277 When enabling a Power Channel, Carrier Managers **shall** send a “Power Channel Control (Enable Payload Power)” command to the Primary PM to enable Payload Power first. If a redundant power configuration is implemented, Carrier Managers **shall** then send “Power Channel Control (Enable Payload Power)” command to the Redundant PM to enable Payload Power after a minimum 25 ms delay.

REQ 3.278 When disabling a Power Channel in a redundant power configuration, Carrier Managers **shall** first disable the Redundant PM with the “Power Channel Control (Disable Payload Power)” command, then send the “Power Channel Control (Disable Payload Power)” command to the Primary PM.

REQ 3.279 Carrier Managers **shall** designate at most one Primary PM to each Management Power Channel.

REQ 3.280 Carrier Managers **shall** designate at most one Primary PM to each Payload Power Channel.

REQ 3.281 Carrier Managers **shall** designate the same Primary PM to provide Management Power, Payload Power, and assert ENABLE# to a given Power Channel.

REQ 3.282 If a redundant power configuration is implemented in the Power Subsystem, the Redundant PM **shall** be configured by the Carrier Manager to back up the enabled Payload Power of all Primary PMs.

REQ 3.283 If a redundant power configuration is implemented in the Power Subsystem, the Redundant PM **shall** be configured by the Carrier Manager to back up the enabled Management Power and asserted ENABLE# of all Primary PMs.

Property of CERN - For Internal Use Only – External Distribution Prohibited

3.8.5 Power management commands and sensors

¶ 161 The Carrier Manager manages power for the MicroTCA Carrier via a set of power management commands implemented by the PM EMMC. The Power Channel Control command is defined to control the Management Power, Payload Power, and ENABLE# to each Module.

¶ 162 If the Power Subsystem is configured with a Redundant PM, the same Power Channel Control command is used for both Primary PM and Redundant PM. In such a configuration, the Payload Power of Primary PM is enabled first, and the Redundant PM is enabled second by the Carrier Manager. When the state of a Power Channel is explicitly changed, the command includes an identification of both the primary and Redundant PM for that Power Channel. One result of this identification is to inform the Redundant PM which PM is the primary so that when the Primary PM fails the Redundant PM can assume the role of Primary PM for only the Power Channels assigned to the failed Primary PM. The power disable process is performed in the reverse order by the Carrier Manager to ensure the Primary PM is not disabled before the Redundant PM, thus avoiding an unnecessary PM failover due to Primary PM power loss.

¶ 163 The Payload *Power Channel Current Limit* field is provided for PMs that are capable of dynamically setting the Power Channel current limit circuit.

¶ 164 Table 3-28 describes the details of each field in the “Power Channel Control” command.

Table 3-28 Power Channel Control command

	Byte	Data field
Request data	1	*PICMG Identifier.* Indicates that this is a PICMG-defined group extension command. A value of 00h **shall** be used.
	2	*Power Channel Number.* This field specifies the Power Channel to affect.
	3	*Power Channel Control.* This field specifies what action to take on the specified Power Channel. 00h = Disable Management Power 01h = Enable Management Power 02h = De-assert ENABLE# 03h = Assert ENABLE# 04h = Disable Payload Power 05h = Enable Payload Power All other values are reserved.
	4	*Power Channel Current Limit.* This field defines the maximum Payload Power current on the specified Power Channel. It is represented in 1/10s of Amps. This field is only used when enabling Payload Power. In other cases, this field **shall** be set to 00h.
	5	*Primary PM.* This field specifies the PM Site Number of the PM that is the Primary PM for the specified Power Channel. This field is always used when enabling/disabling Payload Power and/or Management Power. In other cases, this field **shall** be set to 00h.
	6	*Redundant PM.* This field specifies the PM Site Number of the PM that is the Redundant PM for the specified Power Channel. This field is always used when enabling/disabling Payload Power and/or Management Power. In other cases, this field **shall** be set to 00h. This field **shall** be set to 00h if no Redundant PM is present.

Property of CERN - For Internal Use Only – External Distribution Prohibited

Table 3-28 Power Channel Control command (continued)

Response data	1	*Completion Code*.
	2	*PICMG Identifier.* Indicates that this is a PICMG-defined group extension command. A value of 00h **shall** be used.

¶ 165 When the Carrier Manager needs to determine the status of the Power Channels of a PM, it sends a "Get Power Channel Status" command to that PM's EMMC. The command response includes indication whether the PM is acting as primary or redundant power source for the Power Channel. The *Global Status* provides the state of Payload and Management Power supplied to all Power Channels implemented by a PM. PMs typically disable Power Channels in response to Power Channel overcurrent or global power failures. The *Power Channel Status* field provides individual Power Channel status. Table 3-29 describes the "Get Power Channel Status" command.

Table 3-29 Get Power Channel Status command

	Byte	Data field
Request data	1	*PICMG Identifier.* Indicates that this is a PICMG-defined group extension command. A value of 00h **shall** be used.
	2	*Starting Power Channel Number.* This field specifies the first Power Channel number for which to return status.
	3	*Power Channel Count*. This field specifies the number of Power Channels for which to return status.
Response data	1	*Completion Code*.
	2	*PICMG Identifier.* Indicates that this is a PICMG-defined group extension command. A value of 00h **shall** be used.
	3	*Max Power Channel Number.* This field indicates the max Power Channel number supported by the PM.
	4	*Global Status.* This field indicates the global status of the PM. [7:4] - Reserved, write as 0h. [3] - *Unidentified Fault*. 1b = Redundant PM is providing Payload Power current 0b = Redundant PM is not providing Payload Power current [2] - *Payload Power Good*. 1b = Payload Power is good 0b = Payload Power is not good to one or more Power Channels supplied by the PM [1] - *Management Power Good*. 1b = Management Power is good 0b = Management Power is not good to one or more Power Channels supplied by the PM [0] - *Role*. 1b = Primary 0b = Redundant

Property of CERN - For Internal Use Only – External Distribution Prohibited

Table 3-29 Get Power Channel Status command (continued)

5:N	*Power Channel Status.* This field indicates the status of the given Power Channel for this PM. [7] - Reserved, write as 0b. [6] - *PWR_ON*. 1b = PWR_ON is asserted 0b = PWR_ON is not asserted or not supported by this Power Channel [5] - *Payload Power Overcurrent*. 1b = A Payload Power overcurrent condition has been detected 0b = A Payload Power overcurrent condition has not been detected [4] - *Payload Power.* 1b = Payload Power is enabled 0b = Payload Power is disabled [3] - *Enable*. 1b = ENABLE# is asserted 0b = ENABLE# is not asserted [2] - *Management Power Overcurrent*. 1b = A Management Power overcurrent condition has been detected 0b = A Management Power overcurrent condition has not been detected [1] - *Management Power.* 1b = Management Power is enabled 0b = Management Power is not enabled [0] - *Present.* 1b = PS1# is asserted 0b = PS1# is not asserted

¶ 166 At the normal operation stage, the Carrier Manager manages and controls the Management Power, ENABLE# and Payload Power to the Modules.

¶ 167 Each PM's EMMC implements a Power Channel Notification sensor, and reports to the Carrier Manager any state changes of any Power Channel for which it is the Primary PM. This sensor also reports newly inserted modules and changes in the PM's role, Management Power health, and Payload Power health. The details of this sensor are described in Table 3-30, "Power Channel Notification event message."

Property of CERN - For Internal Use Only – External Distribution Prohibited

¶ 168 The main purpose of the Power Channel Notification sensor is to notify the Carrier Manager of state changes affecting any Power Channel in the PM. The Power Channel Notification sensor is an event only sensor as defined in the IPMI v2.0 specification, Section 43.3 “SDR Type 03h, Event-Only Record”, and as such it is not required to support the other typical sensor commands. Note that this SDR type is new in IPMI v2.0; therefore existing event and SDR processing software likely needs to be updated to handle this SDR type.

Table 3-30 Power Channel Notification event message

	Byte	Data field
Request data	1	*Event Message Rev* = 04h
	2	*Sensor Type* = F3h (Power Channel Notification)
	3	*Sensor Number* = 0xxh (Implementation specific)
	4	*Event Direction* [7] = 0b (Assertion) *Event Type* [6:0] = 6Fh (Sensor Specific)
	5	*Event Data 1.* [7:6] - *Event Data 2 Format.* 02h = OEM code in Event Data 2 Other values reserved. [5:4] - *Event Data 3 Format.* 00h = Event Data 3 not specified - This value **shall** be used for global status change events 02h = OEM code in Event Data 3 - This value **shall** be used for channel status change events Other values reserved. [3:0] - *Notification Event Offset.* 00h = Global status change 01h = Channel status change 02h – 0Fh = Reserved

Property of CERN - For Internal Use Only – External Distribution Prohibited

Table 3-30 Power Channel Notification event message (continued)

	6	*Event Data 2.* For global status change events, this field is defined as: [7:4] - Reserved, write as 00h. [3] - *Unidentified Fault*. 1b = Redundant PM is providing Payload Power current 0b = Redundant PM is not providing Payload Power current, Primary PM always writes as 0b [2] - *Payload Power Good*. 1b = Payload Power is good 0b = Payload Power is not good [1] - *Management Power Good*. 1b = Management Power is good 0b = Management Power is not good [0] - *Role*. 1b = Primary 0b = Redundant For Power Channel status change events, this field is defined as: [7] - Reserved. [6] - *PWR_ON*. 1b = PWR_ON is asserted 0b = PWR_ON is not asserted or not supported by this Power Channel [5] - *Payload Power Overcurrent*. 1b = A Payload Power overcurrent condition has been detected 0b = A Payload Power overcurrent condition has not been detected [4] - *Payload Power.* 1b = Payload Power is enabled 0b = Payload Power is disabled [3] - *Enable*. 1b = ENABLE# is asserted 0b = ENABLE# is not asserted [2] - *Management Power Overcurrent*. 1b = A Management Power overcurrent condition has been detected 0b = A Management Power overcurrent condition has not been detected [1] - *Management Power*. 1b = Management Power is enabled 0b = Management Power is not enabled [0] - *Present*. 1b = PS1# is asserted 0b = PS1# is not asserted
	7	*Event Data 3*. For Power Channel status change events, this field indicates the Power Channel number to which this event corresponds. For global status change events, this field **shall not** be present.
Response data	1	*Completion Code.*

Property of CERN - For Internal Use Only – External Distribution Prohibited

¶ 169 When a Carrier Manager needs to reset a PM, it sends a "PM Reset" command to another PM's EMMC. A PM EMMC may not be able to reset its own PM. See Section 4.6.5.4.2, "Reset of PMs" for additional information. The "PM Reset" command is defined in Table 3-31.

Table 3-31 PM Reset command

	Byte	Data field
Request data	1	*PICMG Identifier.* Indicates that this is a PICMG-defined group extension command. A value of 00h **shall** be used.
	2	*Site Number.* This field specifies the Site Number of the PM to reset.
Response data	1	*Completion Code*.
	2	*PICMG Identifier.* Indicates that this is a PICMG-defined group extension command. A value of 00h **shall** be used.

¶ 170 Carrier Managers can send a "Get PM Status" command to one PM to determine if another PM is present and healthy. PM presence and health is indicated by the PM_OK signal. Table 3-32 describes the "Get PM Status" command.

Table 3-32 Get PM Status command

	Byte	Data field
Request data	1	*PICMG Identifier.* Indicates that this is a PICMG-defined group extension command. A value of 00h **shall** be used.
	2	*Site Number.* This field specifies the PM Site Number for which to get status.
Response data	1	*Completion Code*.
	2	*PICMG Identifier.* Indicates that this is a PICMG-defined group extension command. A value of 00h **shall** be used.
	3	[7:1] - Reserved, write as 00h. [0] - *PM Present and Healthy.* 1b = PM is present and healthy 0b = PM is not present or not healthy

Property of CERN - For Internal Use Only – External Distribution Prohibited

¶ 171 Carrier Managers sends a “PM Heartbeat” command to all present PMs to notify a PM that the Carrier Manager is managing the Power Channels. If the Carrier Manager fails to periodically resend the “PM Heartbeat” command before the *Time-out* period or the MCH(s) indicated by *MCH 1 PS1#* and *MCH 1 PS1#* are extracted, the PMs will revert to autonomous mode for any CU or MCH Power Channels for which they are programmed as the Primary PM. Table 3-33 describes the “PM Heartbeat” command.

Table 3-33 PM Heartbeat command

	Byte	Data field
Request data	1	*PICMG Identifier.* Indicates that this is a PICMG-defined group extension command. A value of 00h **shall** be used.
	2	*Time-out*. Time in 1/10 seconds before the PM determines the Carrier Manager is non-functional and the PM reverts to autonomous mode for any CU or MCH Power Channels for which it is programmed as the Primary PM.
	3	[7:2] - Reserved, write as 00h. [1] - *MCH 2 PS1#.* 1 = use MCH 2 PS1# de-assertion to indicate Carrier Manager is extracted 0 = Ignore MCH 2 PS1# and wait for Time-out to determine if Carrier Manager is non-functional [0] - *MCH 1 PS1#.* 1 = use MCH 1 PS1# de-assertion to indicate Carrier Manager is extracted 0 = Ignore MCH 1 PS1# and wait for Time-out to determine if Carrier Manager is non-functional If both *MCH 1 PS1#* and *MCH 2 PS1#* are set, PMs **shall** wait for both MCH 1 PS1# and MCH 2 PS1# de-assertion or *Time-out* seconds to determine that the Carrier Manager function is non-functional or extracted.
Response data	1	*Completion Code*.
	2	*PICMG Identifier.* Indicates that this is a PICMG-defined group extension command. A value of 00h **shall** be used.

Requirements

REQ 3.284 PM EMMCs **shall not** perform autonomous enabling of Management Power, assertion of ENABLE#, or enabling of Payload Power while a Carrier Manager is managing the MicroTCA Carrier as indicated by the “PM Heartbeat” command defined in Table 3-33.

REQ 3.285 PM EMMCs **shall** revert to autonomous mode for any CU or MCH Power Channels for which the PM is programmed as the Primary PM when the “PM Heartbeat” command is not received within *Time-out* seconds or if the MCH(s) indicated by *MCH 1 PS1#* and *MCH 1 PS1#* are extracted.

REQ 3.286 PM EMMCs **shall** return a completion code of 80h to the “PM Heartbeat” command when previously operating in autonomous mode for any CU or MCH Power Channels.

REQ 3.287 Carrier Managers **shall** send the “PM Heartbeat” command and then periodically resend the command within *Time-out* seconds while performing MicroTCA Carrier power budgeting, FRU activation and state management, and other Carrier Manager functions specified in this specification. If a completion code of 80h is returned by the “PM Heartbeat” command, the Carrier Manager **shall** re-perform early power management steps including recalculating maximum available Payload Power.

REQ 3.288 PM EMMCs **shall** provide status of another PM via the “Get PM Status” command defined in Table 3-32.

Property of CERN - For Internal Use Only – External Distribution Prohibited

REQ 3.289 PM EMMCs **shall** support resetting another PM via the "PM Reset" command defined in Table 3-31. The PM being reset meets REQ 3.234.

REQ 3.290 PM EMMCs **shall** support control of Payload Power via the "Power Channel Control" command defined in Table 3-28.

REQ 3.291 PM EMMCs **shall** support control of Management Power via the "Power Channel Control" command.

REQ 3.292 PM EMMCs **shall** support control of ENABLE# via the "Power Channel Control" command.

REQ 3.293 Each PM EMMC **shall** determine its primary or redundant role based on its Site Number and the *Primary PM* and *Redundant PM* fields in the "Power Channel Control" command.

REQ 3.294 The Redundant PM EMMC **shall** determine which Power Channels a Primary PM is providing power to, from the *Primary PM* field in "Power Channel Control" command. This is used when a Primary PM fails, to allow the Redundant PM to disable its redundant Power Channels to all except for the Power Channels supplied by the failed Primary PM.

REQ 3.295 Carrier Managers **shall** send the "Power Channel Control" command to control Management Power for each Module.

REQ 3.296 Carrier Managers **shall** send the "Power Channel Control" command to control ENABLE# for each Module.

REQ 3.297 PM EMMCs **shall** disable Payload Power to a Module when Management Power is disabled or fails.

REQ 3.298 PM EMMCs **shall** support the "Get Power Channel Status" command defined in Table 3-29.

REQ 3.299 Carrier Managers **shall** send the "Get Power Channel Status" command to acquire the current state of the Power Channels including PS1#, PWR_ON and ENABLE# of the Modules.

REQ 3.300 Each PM's EMMC **shall** implement a Power Channel Notification sensor, as described in Table 3-30. The Power Channel Notification sensor **shall** be implemented as an event only sensor, it does not support sensor commands applied to normal sensors.

REQ 3.301 Each PM EMMC **shall** send an event from its Power Channel Notification sensor to the Carrier Manager when PS1# is asserted or de-asserted to any Power Channel.

REQ 3.302 Each PM EMMC **shall** send an event from its Power Channel Notification sensor to the Carrier Manager when any of the following changes state for any Power Channel for which it is the Primary PM: Module PWR_ON, Module ENABLE#, MP enable, Payload Power enable, MP over current, or Payload Power over current. A PM **shall not** send events from its Power Channel Notification sensor for such events unless it is the Primary PM for the corresponding Power Channel.

REQ 3.303 Each PM EMMC **shall** send events from its Power Channel Notification sensor for any of the following global status changes: Role, Payload Power Good, or Management Power Good.

REQ 3.304 The Redundant PM EMMC **shall** send events from its Power Channel Notification sensor when it detects that it has begun to provide Payload Power current, or is no longer providing Payload Power current, as a Redundant PM. This is intended to identify to higher level management software that a Primary PM has an undetected fault in a Payload Power output.

Property of CERN - For Internal Use Only – External Distribution Prohibited

REQ 3.305 When a PM's EMMC receives a "Set Event Receiver" command, it **shall not** send any Power Channel Notification events to reflect previous Power Channel state. Power Channel Notification events **shall** only be sent when actual Power Channel status changes occur. The intent of this requirement is to avoid sending a large number of events to the Carrier Manager, given that the "Get Power Channel Status" command provides global PM status and status for all supported Power Channels.

3.8.6 Abnormal power condition handling

¶ 172 When Payload Power is unhealthy in a Primary PM, the entire PM fails. The failing PM will try to send out a Power Supply failure event to the Carrier Manager, but it may not succeed due to instability of the PM.

¶ 173 If a Redundant PM is configured, the Redundant PM disables its Power Channels corresponding to the remaining good PM(s) and takes over the Power Channels of the failed PM. A "Global Status Change" Power Channel Notification event is sent by the newly Primary PM, after the failover is complete, indicating that the PM is now a Primary PM. A Carrier Manager which implements a redundancy sensor for the Power Subsystem can use this event to cause the redundancy sensor to send a Redundancy Lost event.

¶ 174 An operator may replace the failed PM. The newly inserted PM can be configured as the new Redundant PM by the Carrier Manager. The Carrier Manager commands the new PM to enable redundant power for all Power Channels enabled on Primary PM(s). After establishing the Redundant PM, a Carrier Manager which implements a redundancy sensor for the Power Subsystem can cause that sensor to send a Fully Redundant event.

¶ 175 The Power Module Status Sensor uses the IPMI defined Power Supply sensor type. Table 3-34 lists all the relevant offsets that the Power Module Status sensor needs to support for generated events.

Table 3-34 Power Module Status sensor: Event/Reading Type Code = Sensor Specific (6Fh)

Sensor Type	Sensor Type Code	Sensor specific Offset	Event
Power Supply	08h	00h	Presence detected
		01h	Power Supply Failure detected
		03h	Power Supply input lost (AC/DC)

¶ 176 Table 3-35 lists all the relevant sensor offsets that the Power Subsystem Redundancy sensor needs to support for generated events.

Table 3-35 Power Subsystem Redundancy sensor: Event/Reading Type Code = 0Bh

Generic Event/ Reading Type Code	Event/Reading Class	Generic Offset	Description
0Bh	Discrete		Redundancy States
		00h	Fully Redundant (formerly "Redundancy Regained") Indicates that full redundancy has been regained.
		01h	Redundancy Lost

Property of CERN - For Internal Use Only – External Distribution Prohibited

Requirements

REQ 3.306 For each PM, the PM EMMC **shall** implement a Power Module Status sensor and its corresponding SDR. In case of PM failure, the PM **should** try to send a Power Module Failure event to the Carrier Manager. Table 3-34 describes the details of this sensor.

REQ 3.307 Carrier Managers **should** implement the Power Subsystem Redundancy Sensor and its corresponding SDR.

REQ 3.308 After the Carrier Manager configures the Power Channels of a Redundant PM, a Fully Redundant event **shall** be asserted if the Power Subsystem Redundancy sensor is implemented.

REQ 3.309 When a Redundant PM changes to a Primary PM, a Redundancy Lost event **shall** be asserted if the Carrier Manager implements the Power Subsystem Redundancy sensor.

REQ 3.310 When a Redundant PM fails, the Carrier Manager **should** assert a Redundancy Lost event if the Carrier Manager implements a Power Subsystem Redundancy sensor.

REQ 3.311 When Carrier Managers loses communication with a PM, a Carrier Manager **may** assert a Redundancy Lost event if the Carrier Manager implements a Power Subsystem Redundancy sensor.

REQ 3.312 In a non-redundant power configuration, when a new PM is inserted in a MicroTCA Carrier, the new PM **may** be configured as the Redundant PM by the Carrier Manager.

3.8.6.1 Input voltage sensor

¶ 177 In a typical ‘On Battery’ condition, the input voltage to the PM generally drops slowly over time. Input voltage sensors on the PM generate events to upper level management software that can trigger event processing and gracefully shut down the system when the input feed voltage is approaching its operational limits. The upper level management software can then send an emergency power down “Chassis Control (power down)” command to tell the PM to shut down until the input voltage reaches acceptable levels. Note that this command will shut down power to the MCH and the CU, as well as other Modules in the MicroTCA Carrier.

¶ 178 Due to the fact that the “Set Power Restore Policy” and “Chassis Control” commands do not contain FRU Device IDs, explicit message bridging is used by the MicroTCA aware management software to send these commands to the PMs.

¶ 179 Once voltages return to acceptable levels, the PMs renegotiate a Startup PM. The Startup PM then performs autonomous mode for the CU and the MCH Power Channels.

¶ 180 PMs attempt to send events prior to removing power. The time required for the event to propagate to an event receiver and be stored is implementation-defined. In the normal case, the lower critical event is sent with plenty of time prior to the non-recoverable event, thus allowing upper-level management software time to notice the condition of the input power.

Requirements

REQ 3.313 PMs **should** provide a voltage sensor and associated SDR for each power input.

REQ 3.314 PM voltage sensors, if provided, **should** have a total measurement accuracy of +/-2% or better under all operating conditions.

REQ 3.315 If input power feeds cross the lower non-recoverable threshold (with hysteresis) specified in the SDR for the input power sensor, the PM EMMC **should** autonomously remove Payload Power and Management Power to each supported FRU.

Property of CERN - For Internal Use Only – External Distribution Prohibited

REQ 3.316 Each PM EMMC **should** support Sensor Device commands, as described in Section 29 of the IPMI specification, including “Get Device SDR Info”, “Get Device SDR”, “Get Sensor Reading Factors”, “Set Sensor Hysteresis”, “Get Sensor Hysteresis”, “Set Sensor Threshold”, “Get Sensor Threshold”, “Set Sensor Event Enable”, “Get Sensor Event Enable”, and “Get Sensor Reading” for the input voltage sensor. SDR fields including input voltage thresholds **should** be stored in non-volatile memory.

REQ 3.317 If input voltage cross the upper critical, lower critical, upper non-recoverable, or lower non-recoverable thresholds specified in the sensor’s SDR, the PM EMMC **should** send a platform event to the event receiver for upper-level management software to handle. The PM EMMC **may** also send a platform event when the input voltage crosses the upper non-critical or the lower non-critical thresholds.

REQ 3.318 PMs **should** support the “Chassis Control” command defined in Section 22.3 of the IPMI specification. Upon receipt of the emergency power down “Chassis Control (power down)” command, PMs **should** shut down all power to all supported FRUs and remain off until input voltage reaches a stable implementation-defined acceptable voltage.

REQ 3.319 PMs **should** support the “Set Power Restore Policy” command defined in Section 22.7 of the IPMI specification. If supported, the power restore capability **shall** be stored in volatile memory (automatically cleared if all power is removed).

REQ 3.320 Unless otherwise directed by a “Set Power Restore Policy” command, PMs **should** restore Management Power to each FRU and Payload Power to the MCH's and Cooling Units once the input voltage reaches a stable implementation-defined acceptable voltage.

REQ 3.321 If upper level system management software sends “Chassis Control” commands to the PMs, the upper level system management software **shall** be responsible for ensuring that the Primary PM for the MCH(s) is the last PM to be powered off.

3.9 Cooling management

¶ 181 In a MicroTCA Shelf, the Shelf Manager is responsible for managing its Cooling Unit(s) to meet the thermal requirements of the Shelf. When a Cooling Unit powers up, its fans run at full speed or a locally-controlled speed. The Shelf Manager can configure the fan speed(s) based on the geographic relationships of populated Modules and CUs that can cool them, as well as the current state of temperature sensors in the Shelf.

¶ 182 All the commands sent by the Shelf Manager to a Cooling Unit go through the Carrier Manager associated with the Cooling Unit. The Carrier Manager automatically redirects cooling-related commands to the specified Cooling Unit.

¶ 183 MicroTCA cooling management reuses the cooling control commands from the AdvancedTCA Base specification, but defines new fan geography records.

3.9.1 Fan geography

¶ 184 The mapping between FRUs and the Cooling Units that cool those FRUs is defined by the MicroTCA Fan Geography record(s) found in Shelf FRU Information. If the mapping changes, the record(s) must be updated to reflect the change. For example, in a Shelf

Property of CERN - For Internal Use Only – External Distribution Prohibited

consisting of several MicroTCA Carrier Cubes, when a Cube is replaced with one that has a different mapping of FRU location to CU, the MicroTCA Fan Geography record(s) must be updated. The MicroTCA Fan Geography record is described in Table 3-36.

Table 3-36 MicroTCA Fan Geography record

Offset	Length	Description
0	1	*Record Type ID.* For all records defined in this specification, a value of C0h (OEM) **shall** be used.
1	1	*End of List/Version.* [7:7] End of list. Set to one for the last record [6:4] Reserved, write as 0h. [3:0] Record format version (=2h for this definition)
2	1	*Record Length*
3	1	*Record Checksum.* Holds the zero checksum of the record.
4	1	*Header Checksum.* Holds the zero checksum of the header.
5	3	*Manufacturer ID.* LS Byte first. Write as the three byte ID assigned to PICMG. For this specification, the value 12634 (00315Ah) **shall** be used.
8	1	*PICMG Record ID.* For the MicroTCA Fan Geography record, the value 28h **shall** be used.
9	1	*Record Format Version.* For this specification, the value 0h **shall** be used.
10	1	*CU Count.* Number of CUs in the Shelf (M).
11	variable	*CU FRU Entries.* This is a list of CU entries as defined in *Table 3-37*, one for each CU in the Shelf. The length varies, depending on the number of Cooling Units (M) and the number (N) and size (2+F) of Cooled FRU records.

¶ 185 Multiple MicroTCA Fan Geography records can be used, if more than one is needed to describe all of the mapping entries due to the IPMI restriction on multi-record size. The Shelf Manager concatenates all such records together in the order in which they appear in the Shelf FRU Information and treats them as if the mappings were contained in a single record.

¶ 186 Each CU FRU entry associates a list of FRU Device IDs and the Carrier Number the FRUs are in with the Carrier Number and FRU Device of the CU that covers them. Table 3-37 describes the CU FRU entry.

Table 3-37 CU FRU entry

Offset	Length	Description
0	1	*CU Carrier Number.* - The MicroTCA Carrier where the CU is located.
1	1	*CU FRU Device ID*. The Carrier Manager FRU Device ID for the CU.
2	1	*Number of Cooled FRU records* (N).
3	variable	*Cooled FRU records*. A list of MicroTCA Carriers and the FRUs cooled by this CU as defined in *Table 3-38*. The length varies, depending on the number (N) and size (2+F) of each Cooled FRU record.

Property of CERN - For Internal Use Only – External Distribution Prohibited

¶ 187 The Modules cooled by a CU are grouped by Carrier Number and identified by Carrier Manager FRU Device ID. The FRU Device ID value FEh represents all FRUs in a MicroTCA Carrier. Table 3-38 describes the Cooled FRU record.

Table 3-38 Cooled FRU record

Offset	Length	Description
0	1	*Cooled FRUs Carrier Number.* - The MicroTCA Carrier where the Cooled FRUs are located.
1	1	*Number of Cooled FRU Device IDs* (F).
2	F	*FRU Device IDs*. The Carrier Manager FRU Device IDs for the Cooled FRUs. The value FEh **shall** indicate all FRUs in the *Cooled FRUs Carrier Number* MicroTCA Carrier.

Requirements

REQ 3.322 In MicroTCA Shelves that contain one or more Cooling Units, the Shelf FRU Information **shall** contain one or more MicroTCA Fan Geography records to describe the location of the fans in the Shelf.

REQ 3.323 If more than one MicroTCA Fan Geography record is present in the Shelf FRU Information, they **shall** be processed in order and treated as one logical record by the Shelf Manager.

REQ 3.324 If a FRU is not described by any CU FRU Entries, the Shelf Manager **may** assume that the FRU can be cooled by all fans.

REQ 3.325 If at least one CU FRU Entry is present for a FRU, then only the CUs listed **should** be used to cool that FRU. The order of the entries in the records **shall not** be relevant.

3.9.2 Cooling control

¶ 188 MicroTCA reuses the fan speed commands from AdvancedTCA. See Section 3.9.1.4 “Fan tray participation” in the AdvancedTCA specification for the definition of the “Get Fan Speed Properties” and “Set Fan Level” commands. See Section 3.9.1.5 “Fan tray participation - System Manager control” in the AdvancedTCA specification for the “Set Fan Policy” command definition.

Requirements

REQ 3.326 Each Cooling Unit **shall** define its *Current Draw,* in its Module Current Requirement record, equal to the maximum power required to operate the fans at all speeds.

REQ 3.327 Cooling Units **shall** accept the “Get Fan Speed Properties” command.

REQ 3.328 Cooling Units that support more than one speed **shall** accept the “Get Fan Level” and “Set Fan Level” commands.

REQ 3.329 Carrier Managers **shall** accept the “Get Fan Speed Properties”, “Get Fan Level”, and “Set Fan Level” commands from the Shelf-Carrier Manager Interface and forward these commands to the Cooling Units via IPMB-0, based on Carrier Manager FRU Device ID.

REQ 3.330 In the “Get Fan Speed Properties” command, Cooling Units EMMCs **shall** set the *Minimum Speed Level* to be the minimum value that is accepted in the “Set Fan Level” command.

Property of CERN - For Internal Use Only – External Distribution Prohibited

REQ 3.331 In the "Get Fan Speed Properties" command, Cooling Units EMMCs **shall** set the *Maximum Speed Level* to be the maximum value that is accepted in the "Set Fan Level" command.

REQ 3.332 For Cooling Units that support more than one speed, each EMMC **shall** support all *Fan Levels* from *Minimum Speed Level* to *Maximum Speed Level* in one-unit increments, plus the Shut Down (FEh), and Local Control (FFh) *Fan Levels*.

REQ 3.333 Cooling Units that support automatic fan speed control **shall** set the *Local Control Mode Supported* bit to 1b.

REQ 3.334 If the *Local Control Mode Supported* bit is 1b, the *Local Control Enable State* is enabled, and the Shelf Manager overrides the fan level in the range *Minimum Speed Level* to *Maximum Speed Level*, each Cooling Unit **shall** set the fan speed to the maximum of the speed it selects and the override value provided from the Shelf Manager, except when a Cooling Unit has entered Shut Down mode.

REQ 3.335 If a Shelf Manager sends the "Set Fan Level (*Fan Level* = Shut Down)" command, Cooling Units that support more than one speed **shall** shut down the fan, regardless of the *Local Control Mode Supported* bit value.

REQ 3.336 If the *Local Control Mode Supported* bit is 0b, each Shelf Manager **shall** be solely responsible for adjusting the speeds of the fans.

3.9.3 Normal cooling operation

¶ 189 During normal cooling conditions, the Shelf Manager discovers the Cooling Unit capability and fan geography information first, then it examines the Module loads in the Shelf and calculates the thermal requirements based on this information. After that, the Shelf Manager commands the Carrier Manager in the MicroTCA Carrier with the Cooling Unit attached to set the normal fan speed level. If the Cooling Unit is directly managed by the Shelf Manager, then it sets the fan level using the access method supported by the cooling subsystem. The cooling operation enters a normal operation stage after all the fans are configured to proper speed level by the Shelf Manager. During normal operation, the Shelf Manager monitors the activities within the Shelf and takes action if needed. The Shelf Manager may make some cooling adjustment when a Module is inserted into or removed from the Shelf, when inlet and outlet air temperature change, or when FRU states change.

3.9.4 Abnormal cooling operation

¶ 190 There are many possible conditions that can occur during abnormal cooling operation. One condition is when a Module detects that a monitored temperature has exceeded one or more upper thresholds. At this point, the (E)MMC, or MCMC sends a standard IPMI temperature event message to the Carrier Manager. The Carrier Manager forwards any events it receives from (E)MMCs or MCMCs to the Shelf Manager. The Shelf Manager uses these events to adjust the CU fan speeds, in an attempt to return the Shelf to the normal operation stage.

Requirement

REQ 3.337 MCMCs and EMMCs **shall** support IPM Controller requirements, as specified in Section 3.9.3.2 "Abnormal Event message" of the AdvancedTCA specification.

Property of CERN - For Internal Use Only – External Distribution Prohibited

3.9.5 Fan tachometer sensors

¶ 191 The CUs contain fan tachometer sensors and the EMMC contains a Sensor Data Record (SDR) to describe the sensor for each fan implemented by the CU. The CU EMMC monitors the operational status of its fans and when a fan failure condition is detected the CU EMMC generates an event and send it to the event receiver.

Requirements

REQ 3.338 CU EMMCs **shall** implement fan tachometer sensors and associated SDRs.

REQ 3.339 CU EMMCs **shall** generate a fan tachometer event when a fan failure is detected.

3.9.6 Temperature sensors

¶ 192 MicroTCA Modules contain at least two temperature sensors and Module MCMCs or (E)MMCs provide appropriate SDRs to describe them. If desired, more than two temperature sensors can be present. Section 3.9.3.2 “Abnormal Event message” of AdvancedTCA specification defines the IPMI-based severity level and its mapping with AdvancedTCA-based severity levels. This specification reuses this definition from the AdvancedTCA specification for MicroTCA Shelves.

Requirements

REQ 3.340 MCMCs, and both PM and CU EMMCs **shall** provide at least two temperature sensors and their corresponding SDRs.

REQ 3.341 Temperature sensors **should** have a total measurement accuracy of +/-2% or better under all operating conditions.

REQ 3.342 Each MCMC, PM and CU EMMC **shall** provide a sensor monitoring the temperature of the component which is considered to be of most thermal concern.

REQ 3.343 MCMCs, and both PM and CU EMMCs, **shall** provide SDR information identifying the maximum operating temperature (upper critical threshold) for the temperature sensors mandated by REQ 3.342.

REQ 3.344 MCMCs, and both PM and CU EMMCs, **shall** provide SDR information identifying the warning operating temperature (upper non critical threshold) for temperature sensors mandated by REQ 3.342.

REQ 3.345 Each MCMC, PM and CU EMMC **shall** provide a sensor monitoring the temperature of the inlet air.

REQ 3.346 MCMCs, and both PM and CU EMMCs, **shall** provide SDR information identifying the maximum operating temperature (upper critical threshold) for the sensors monitoring the inlet air temperature.

REQ 3.347 MCMCs, and both PM and CU EMMCs, **shall** provide SDR information identifying the warning operating temperature (upper non critical threshold) for the sensors monitoring the inlet air temperature.

Property of CERN - For Internal Use Only – External Distribution Prohibited

3.10 Electronic Keying

¶ 193 Electronic Keying (E-Keying) is the mechanism by which the management infrastructure dynamically satisfies the needs that are traditionally satisfied by various mechanical connector keying solutions to:

- Prevent mis-operation
- Verify Fabric compatibility

¶ 194 The MicroTCA specification reuses the AMC.0 E-Keying requirements, FRU data, and commands. In MicroTCA, the terms Carrier, on-Carrier device, and Carrier IPM Controller, as defined in AMC.0, refer to the MicroTCA Carrier, MCH Fabric, and MCMC, respectively. In MicroTCA, the data structure fields that specify the on-Carrier device ID refer to an MCH Site Number and Fabric, and the AdvancedMC Slot ID field indicates the AdvancedMC Site Number.

¶ 195 This specification does not address E-Keying connectivity between MicroTCA Carriers, which is considered implementation-defined.

¶ 196 MicroTCA AdvancedMC interconnect topologies include AdvancedMC-to-AdvancedMC, AdvancedMC-to-MCH, and MCH-to-MCH. AdvancedMC Ports are connected by the MicroTCA Backplane from a Port on an AdvancedMC Slot to either another AdvancedMC Slot Port or an MCH Slot Port. One Port on one Slot is connected to one Port on another Slot in a point-to-point fashion.

¶ 197 The Carrier Manager is responsible for E-Keying between the AdvancedMC Ports and connections to other AdvancedMC or MCH Ports. E-Keying for AdvancedMCs is done on a Port-by-Port basis. Ports are enabled if both ends of the interconnect have matching protocols. The term enable, when used in this section, does not always refer to the actual enabling of the LVDS driver for a Port. As specified in AMC.0, Ports that are LVDS are not required to support the physical enabling or disabling of the driver.

Note: Non-LVDS Ports are required to power-up in a disabled state, as specified in AMC.0 Section 6.2.2, “Fabric Interface electrical requirements for non-LVDS”.

¶ 198 In a MicroTCA Carrier with redundant MCHs, the Carrier Manager is responsible for determining that MCH Ports have matching protocols with any corresponding AdvancedMC or MCH Ports before enabling the associated Ports. The Carrier Manager treats the MCH like an AdvancedMC and only enables its Ports if both ends have matching protocols.

¶ 199 The basis for the E-Keying process is the E-Keying entries present as FRU Information in the MCMC and AdvancedMCs.

¶ 200 Two records contain the E-Keying information. The Carrier Point-to-Point Connectivity record contains information about the MicroTCA Carrier physical connections, as defined by the Backplane implementation. The AMC Point-to-Point Connectivity Record describes the protocols supported by each Port. The AMC Point-to-Point Connectivity Record can be found in the MCMC FRU Information and AdvancedMC FRU Information. The Carrier Point-to-Point Connectivity record is located in the Carrier FRU Information. The fields in these records describe how Fabric connectivity is implemented.

¶ 201 In MicroTCA, it is the responsibility of Carrier Managers to perform the E-Keying function. Just as in AdvancedTCA Carrier Boards, MicroTCA Shelf Managers do not participate in Module E-Keying.

Property of CERN - For Internal Use Only – External Distribution Prohibited

¶ 202 This MicroTCA E-Keying section uses the term Module to refer to the MicroTCA FRUs that participate in E-Keying, including AdvancedMCs and MCHs.

¶ 203 MicroTCA follows AMC.0, which permits Port grouping into Channels. For Modules, the primary unit of point-to-point connectivity is a Port. A Port is two differential pairs (one transmit and one receive). One to four Ports can be grouped into a logical Channel that is similar to an AdvancedTCA Channel. A Channel is composed of an arbitrary (not necessarily numerically or physically contiguous) set of up to four Ports.

¶ 204 Module Channels are identified by AMC Channel IDs. In the data structures and commands referenced in this section, AMC Channel IDs play essentially the same role as Channel ID numbers in AdvancedTCA E-Keying. AMC Channel IDs start at 0 and are numbered sequentially on a Module. An AMC Channel ID is simply an index into the list of Channel IDs that are defined on a Module.

¶ 205 Point-to-Point E-Keying supports two routing models: the centralized AdvancedMC-to-MCH model and the AdvancedMC direct-connectivity model. The point-to-point connectivity provided in a MicroTCA Carrier Backplane is described in the Carrier FRU Information. The capabilities of an AdvancedMC to communicate over point-to-point connections are described in the AdvancedMC's FRU Information. Similar information for the Links supported by the MCH is provided in the MCMC FRU Information.

3.10.1 MicroTCA Carrier point-to-point connectivity information

¶ 206 The Carrier Point-to-Point Connectivity record is included in the Carrier FRU Information and describes the point-to-point connections implemented by the MicroTCA Carrier Backplane. The Carrier FRU Information can include several Carrier Point-to-Point Connectivity records, if a single record is not sufficient for describing all point-to-point connections implemented on the MicroTCA Carrier. The Carrier Manager treats these multiple records as a single, logical, point-to-point descriptor list, broken into parts due to limits on multi-record area record lengths. See AMC.0 Table 3-13 "Carrier Point-to-Point Connectivity Record" for the record definition.

¶ 207 In the resource descriptor records, the *AdvancedMC Slot ID* refers to the AdvancedMC Site Number in MicroTCA. The *On-Carrier device ID* refers to the MCH Site Number and Fabric. This is done to reuse these FRU Information descriptors from AMC.0 in MicroTCA. See AMC.0 Table 3-14 "Point-to-Point Resource Descriptor" for the record definition.

¶ 208 In the AMC.0 specification, there are references to a *Resource Type* that is an On-Carrier device ID. In MicroTCA, this *Resource Type* identifies a Fabric Port on an MCH Slot. There are a maximum of two MCHs in a MicroTCA Carrier, and each MCH has up to seven Fabrics. These are Fabric A through Fabric G. MicroTCA defines values for the *on-Carrier device ID* field where bit 3 selects the MCH Slot and bits 2:0 selects the Fabric on the MCH Slot. Fabric A is selected with a value of 0, Fabric B with a 1, Fabric C with a 2, and so on, up to Fabric G which is selected with a value of 6.

Property of CERN - For Internal Use Only – External Distribution Prohibited

¶ 209 Table 3-39 illustrates the use in MicroTCA of the *Resource ID* field, defined in the *Point-to-Point AdvancedMC Resource Descriptor* and the *Remote Resource ID* field, defined in the *Point-to-Point Port Descriptor.*

Table 3-39 Resource ID field usage in MicroTCA

ID value	Resource
00h-06h	MCH 1 Fabrics A-G
07h	reserved
08h-0Eh	MCH 2 Fabrics A-G
0Fh-80h	reserved
81h-8Ch	AdvancedMC Site Number
8Dh-FFh	reserved

¶ 210 Each variable length *Point-to-Point AdvancedMC Resource Descriptor* defines the point-to-point connectivity for the corresponding AdvancedMC Slot or MCH Slot.

¶ 211 Each *Point-to-Point Port Descriptor* describes a point-to-point Port associated with the indicated resource. Each 24-bit entry provides bit fields, indicating the remote resource and remote Port within the remote resource to which the local Port is connected. The term "remote" refers to Ports within the AdvancedMC or MCH Site Number designated by the *Remote Resource ID* field in the *Point-to-Point Port Descriptor.* The term "local" refers to Ports within the AdvancedMC or MCH Slot designated by the *Resource ID* in the Point-to-Point AdvancedMC Resource Descriptor. See AMC.0 Table 3-14 "Point-to-Point AdvancedMC Resource Descriptor" and AMC.0 Table 3-15 "Point-to-Point Port Descriptor" for the record definitions.

Requirements

REQ 3.348 Carrier FRU Information **shall** include one or more Carrier Point-to-Point Connectivity records, as defined in AMC.0.

REQ 3.349 If several records are included, the Point-to-Point AMC Resource Descriptor List fields **shall** be treated by Carrier Managers as different parts of a single Point-to-Point AMC Resource Descriptor List.

REQ 3.350 Carrier FRU Information **shall** contain Carrier Point-to-Point Connectivity records describing all point-to-point connections implemented on a MicroTCA Carrier Backplane.

REQ 3.351 Carrier FRU Information **may** include two Point-to-Point Port Descriptors for each implemented connection in the two Point-to-Point AMC Resource Descriptors of the two Module resources (AdvancedMC or MCH Slots) on either end of the connection.

REQ 3.352 Alternatively, Carrier FRU Information **may** include only a single Point-to-Point Port Descriptor, describing the connection from one of its end points only.

REQ 3.353 The *Resource ID* and *Remote Resource ID* fields bit 3 **shall** select MCH 1 or MCH 2, where 0b is MCH 1 and 1b is MCH 2, in the Point-to-Point AMC Resource Descriptor List, when *Resource Type* specifies an On-Carrier device ID.

REQ 3.354 In the Point-to-Point AMC Resource Descriptor List, the *Resource ID* and *Remote Resource ID* fields bits 2:0 **shall** select Fabrics A-G in an MCH Slot, where 0h is A, 1h is B, and so on, up to 6h is G, when *Resource Type* specifies an On-Carrier device ID.

Property of CERN - For Internal Use Only – External Distribution Prohibited

3.10.2 Module point-to-point connectivity information

¶ 212 One or more AMC Point-to-Point Connectivity records are included in the AdvancedMC FRU Information and describe the Channel and Link connectivity implemented on the AdvancedMC(s). Similarly, one or more such records are included in the MCMC FRU Information to describe connectivity implemented by each MCH. See AMC.0 Table 3-16 “AMC Point-to-Point Connectivity Record” for the record definition.

¶ 213 The AMC Point-to-Point Connectivity record defines the options and requirements supported by the AdvancedMC and MCH. The Carrier Manager searches this record(s) on the AdvancedMC and MCH (or on a pair of connected AdvancedMCs) to determine if there is a match.

¶ 214 The MCH has more Ports than can be represented by the Port Number fields in the AMC Channel Descriptor. The MCH Ports are grouped by Fabric and identified by the *Connected-device ID* field in the AMC Point-to-Point Connectivity record. There are up 7 Fabrics on an MCH. Fabric A is selected with a value of 0, Fabric B with a 1, Fabric C with a 2, and so on, up to Fabric G which is selected with a value of 6. The MCMC FRU Information contains one AMC Point-to-Point Connectivity record for each Fabric.

Note: The Port Number fields in AMC Channel Descriptors do not identify any Fabric. Fabric identification for the Ports of a given AMC Channel Descriptor comes from the *Connected-device* ID field(s) in the AMC Point-to-Point Connectivity record(s) in which that AMC Channel Descriptor is referenced. The Port Number fields of a single AMC Channel Descriptor can refer to different Fabrics, depending on the AMC Point-to-Point Connectivity record in which the AMC Channel Descriptor is designated.

¶ 215 MicroTCA requires each AdvancedMC and MCH to meet the AMC.0 requirements in this area except as specified in this specification. See AMC.0 Section 3.9.2 “AMC point-to-point interface information” for the record definitions.

Requirements

REQ 3.355 Fabrics implemented by an MCH **shall** be described in AMC Point-to-Point Connectivity records found in the multi-record area of the MCH’s MCMC FRU Information.

REQ 3.356 Each MCH’s MCMC FRU Information **shall** contain one AMC Point-to-Point Connectivity record for each Fabric implemented on the MCH. The *Record Type* field **shall** contain a value of 0, as an On-Carrier device, for an MCH in MicroTCA. The *Connected-device ID* field **shall** select the MCH Fabric, where 0h is Fabric A, 1h is Fabric B, and so on, up to 6h is Fabric G.

REQ 3.357 Fabric Channels implemented by an MCH and capabilities for such Channels **shall** be described in the AMC Channel Descriptors and Link Descriptors, respectively, which are found in each MCH’s Fabric AMC Point-to-Point Connectivity record.

REQ 3.358 For multi-protocol support, every protocol for a Channel **shall** have a separate Link Descriptor. The records **shall** be entered in order of preference, but policies of the Carrier Manager **may** override that preference if multiple, compatible, Link capabilities exist.

Property of CERN - For Internal Use Only – External Distribution Prohibited

3.10.3 AMC Port State commands

¶ 216 MicroTCA reuses the “Set AMC Port State” and the “Get AMC Port State” commands, as defined in AMC.0 Sections 3.9.4 and 3.9.5. The On-Carrier device from AMC.0 refers to the MCH Site Number in MicroTCA, with exceptions described in this specification.

Note: When the Port states for MCH devices need to be modified, the Carrier Manager running on the MCH can choose to use an implementation-specific method. The implementation-specific means may not involve the explicit use of this command at all (since the target of the command would be the MCMC itself). This command can also be directed to an MCMC, if some other entity needs to explicitly query the state of a particular Channel on an MCH. Therefore, this command is required to be accepted by MCMCs, as well.

Requirements

REQ 3.359 Carrier Managers **may** send a “Set AMC Port State” command any time after reading an AdvancedMC’s FRU Information.

REQ 3.360 Carrier Managers **shall** send a “Set AMC Port State” command, regardless of whether the outcome is to enable or disable the Port, as soon as the Carrier Manager has computed the E-Keying matches for the Fabric Interface Links.

REQ 3.361 Carrier Managers **shall** send E-Keying “AMC Set Port State” and “AMC Get Port State” commands to each MCMC representing an MCH for the Ports on the MCH.

REQ 3.362 Carrier Managers **may** use an implementation-defined interface to enable or disable Ports managed by the MCMC for the MCH running the Carrier Manager.

REQ 3.363 MCMCs **shall** respond to E-Keying “AMC Set Port State” and “AMC Get Port State” commands from the Carrier Manager for its MCH. The MCMC functionality **shall** include the ability for an external entity to address these commands to the MCMC, referencing a Channel on its MCH.

3.10.4 Clock E-Keying

¶ 217 Clock E-Keying is outside the scope of this revision of MicroTCA.0 and is expected to be specified in a future revision of this specification in alignment with AMC.0.

Property of CERN - For Internal Use Only – External Distribution Prohibited

3.11 Telco alarm management

¶ 218 A MicroTCA Carrier can provide an optional telco alarm function represented by an Intelligent FRU. The telco alarm panel implementation can consist of the following:

- Telco alarm connector, as defined in Section 2.7.6.2 “Telco alarm signaling I/O connector example” of the PICMG 3.0 AdvancedTCA specification
- LEDs, as defined in Section 2.7.6.4 “Shelf alarm LEDs” of the PICMG 3.0 AdvancedTCA specification

¶ 219 There can be only one telco alarm function in a MicroTCA Carrier; if implemented, it can be represented by any Intelligent FRU.

¶ 220 The telco alarm FRU management controller FRU Device ID 0 responds to the “Get Telco Alarm Capability”, “Set Telco Alarm State” and “Get Telco Alarm State” commands and provides the Telco Alarm Input sensor SDR in its device SDR.

¶ 221 The telco alarm function can provide dry contact relays and LEDs for power, minor, major and critical alarms. It can also have connector inputs to reset minor and major alarms and an optional cutoff button.

¶ 222 An operator can clear alarms with the alarm reset buttons or can cutoff alarms with the optional cutoff button. The telco alarm FRU sends a Telco Alarm Input event message when the alarm reset connector inputs or optional alarm cutoff button change state.

¶ 223 The telco alarm function can optionally transition an alarm state to off when its reset input is asserted. A telco alarm implementation with an optional cutoff button can enable an alarm’s LED and its alarm relay in the on state. In the cutoff state an alarm can optionally blink the alarm LED and disable its relay.

¶ 224 A Carrier Manager issues the “Get Telco Alarm Capability” command to FRUs in its MicroTCA Carrier, to determine if there is a FRU that provides the telco alarm function. If a FRU that supports the telco alarm function is located, the Carrier Manager adds a FRU Device Locator record and the Telco Alarm Input sensor to its Device SDR Repository for the telco alarm FRU with a Carrier Manager FRU Device ID of 79. Each Carrier Manager forwards commands sent to the Carrier Manager FRU Device ID 79 to the telco alarm FRU and tracks responses from the telco alarm FRU, if the telco alarm FRU is found in its MicroTCA Carrier.

¶ 225 Carrier Managers treat the telco alarm SDRs as part of the FRU that contains the telco alarm function. If that FRU is hot swappable and is removed, the telco alarm SDRs are removed from the Carrier Manager’s Device SDR Repository along with the rest of the FRU’s SDRs. When the FRU with the telco alarm is inserted and activated, the Carrier Manager discovers the telco alarm function is present and adds the telco alarm SDRs, in addition to the FRU’s SDRs, to the Carrier Manager’s Device SDR Repository.

¶ 226 Shelf Managers and System Managers typically monitors events to determine the collective health of a MicroTCA Shelf and can send a “Set Telco Alarm State” command to the Carrier Manager FRU Device ID 79, to activate telco LEDs and alarm relays.

Property of CERN - For Internal Use Only – External Distribution Prohibited

¶ 227 The Shelf Manager or System Manager telco alarm state can be updated upon receiving a Telco Alarm Input event that is associated with Carrier Manager FRU Device ID 79 Telco Alarm Input sensor. The Shelf Manager or System Manager can also gather the telco alarm state by sending a "Get Telco Alarm State" command to the Carrier Manager FRU Device ID 79.

¶ 228 The "Get Telco Alarm Capability" command indicates which alarms can be controlled by "Set Telco Alarm State" command. For example, if the telco alarm function is present but none of the alarms are controllable, then the "Get Telco Alarm Capability" command returns an *Alarm Capabilities* value of zero. The description of the command is listed in Table 3-40.

Table 3-40 Get Telco Alarm Capability command

	Byte	Data field
Request data	1	*PICMG Identifier.* Indicates that this is a PICMG-defined group extension command. A value of 00h **shall** be used.
	2	FRU Device ID.
Response data	1	*Completion Code*.
	2	*PICMG Identifier.* Indicates that this is a PICMG defined group extension command. A value of 00h **shall** be used.
	3	*Alarm Capabilities.* [7] - *Autonomous Major Reset*. 1b = Major Reset assertion produces an implementation-defined action 0b = autonomous Major Reset action not implemented [6] - *Autonomous Minor Reset*. 1b = Minor Reset assertion produces an implementation-defined action 0b = autonomous Minor Reset action not implemented [5] - *Autonomous alarm cutoff*. 1b = alarm cutoff assertion results in an implementation-defined action 0b = autonomous alarm cutoff action not implemented [4] - *Test Mode*. 1b = test mode can be enabled by the "Set Telco Alarm State" command 0b = test mode can not be enabled [3] - *Power Alarm*. 1b = power alarm can be controlled by the "Set Telco Alarm State" command 0b = power alarm can not be controlled [2] - *Minor Alarm*. 1b = minor alarm can be controlled by the "Set Telco Alarm State" command 0b = minor alarm can not be controlled [1] - *Major Alarm*. 1b = major alarm can be controlled by the "Set Telco Alarm State" command 0b = major alarm can not be controlled [0] - *Critical Alarm*. 1b = critical alarm can be controlled by the "Set Telco Alarm State" command 0b = critical alarm can not be controlled

Property of CERN - For Internal Use Only – External Distribution Prohibited

¶ 229 The details of the “Set Telco Alarm State” command are described in Table 3-41.

Table 3-41 Set Telco Alarm State command

	Byte	Data field
Request data	1	*PICMG Identifier.* Indicates that this is a PICMG-defined group extension command. A value of 00h **shall** be used.
	2	*FRU Device ID.*
	3	*Alarm ID.* 00h = Critical Alarm 01h = Major Alarm 02h = Minor Alarm 03h = Power Alarm 04h = Alarm Cutoff 05h - FFh are reserved.
	4	*Alarm Control.* 00h = set to “off / cutoff disabled” 01h = set to “on / cutoff enabled” FFh = set to implementation defined test state Other values are reserved.
Response data	1	*Completion Code*.
	2	*PICMG Identifier*. Indicates that this is a PICMG defined group extension command. A value of 00h **shall** be used.

Property of CERN - For Internal Use Only – External Distribution Prohibited

¶ 230 The current state of the telco alarms can be obtained by issuing a “Get Telco Alarm State” command. Table 3-42 describes this command.

Table 3-42 Get Telco Alarm State

	Byte	Data field
Request data	1	*PICMG Identifier.* Indicates that this is a PICMG-defined group extension command. A value of 00h **shall** be used.
	2	*FRU Device ID.*
	3	*Alarm ID.* 00h = Critical Alarm 01h = Major Alarm 02h = Minor Alarm 03h = Power Indicator 04h = Alarm Cutoff. 05h - FFh are reserved
Response data	1	*Completion Code*.
	2	*PICMG Identifier*. Indicates that this is a PICMG defined group extension command. A value of 00h **shall** be used
	3	*Alarm States*: 00h = off / cutoff disabled 01h = on / cutoff enabled FFh = test mode Other values are reserved.

Property of CERN - For Internal Use Only – External Distribution Prohibited

¶ 231 A Telco Alarm Input event message is sent by the telco alarm FRU when the reset inputs or optional cutoff button change state. Table 3-43 describes the Telco Alarm Input event message.

Table 3-43 Telco Alarm Input event message

	Byte	Data field
Request data	1	*Event Message Rev* = 04h
	2	*Sensor Type* = F4h (Telco Alarm Input)
	3	*Sensor Number* = 0xxh (Implementation specific)
	4	*Event Direction*. [7] = 0b (Assertion), 1b (De-assertion) *Event Type*. [6:0] = 6Fh (Sensor Specific)
	5	*Event Data 1.* [7:6] - *Event Data 2 Format*. 00h = Event Data 2 not specified Other values reserved. [5:4] - *Event Data 3 Format*. 00h = Event Data 3 not specified Other values reserved. [3:0] - *Offset*. 2h = Alarm Cutoff 1h = Major Reset 0h = Minor Reset All other values are reserved.
	6	*Event Data 2* = FFh or not present
	7	*Event Data 3* = FFh or not present
Response data	1	*Completion Code*

Property of CERN - For Internal Use Only – External Distribution Prohibited

¶ 232 Table 3-44, "Get Sensor Reading (Telco Alarm Input sensor)" shows the result from a "Get Sensor Reading" command issued to a Telco Alarm Input sensor. Byte 4 returns the sensor's reset input and cutoff button state.

Table 3-44 Get Sensor Reading (Telco Alarm Input sensor)

	Byte	Data field
Request data	1	*Sensor Number.* (FFh = reserved)
Response data	1	*Completion Code.*
	2	*Sensor Reading.* [7:0] Not used. Write as 00h.
	3	*Standard IPMI byte* (See "Get Sensor Reading" in the IPMI specification): [7] – 0b = All Event Messages disabled from this sensor [6] – 0b = Sensor scanning disabled [5] – 1b = Initial update in progress This bit is set to indicate that a "Re-Arm Sensor Events" or "Set Event Receiver" command has been used to request an update of the sensor status, and that update has not occurred yet. Software should use this bit to avoid getting an incorrect status while the first sensor update is in progress. This bit is only required if it is possible for the MMC to receive and process a "Get Sensor Reading" or "Get Sensor Event Status" command for the sensor before the update has completed. This is most likely to be the case for sensors, such as fan RPM sensors, that may require seconds to accumulate the first reading after a re-arm. [4:0] Reserved. Ignore on read.
	4	*Current State.* [7:3] - Reserved. Ignore on read. [2] - *Alarm Cutoff*. 1b = Alarm Cutoff is asserted 0b = Alarm Cutoff is not asserted [1] - *Major Reset*. 1b = Major Reset is asserted 0b = Major Reset is not asserted [0] - *Minor Reset*. 1b = Minor Reset is asserted 0b = Minor Reset is not asserted
	(5)	[7:0] – *Optional/Reserved.* If provided, write as 80h (IPMI restriction). Ignore on read.

Requirements

REQ 3.364 A MicroTCA Carrier **may** implement up to one telco alarm FRU.

REQ 3.365 The (E)MMC or MCMC that implements the telco alarm FRU **shall** support the "Get Telco Alarm Capability", "Set Telco Alarm State" and "Get Telco Alarm State" commands sent to its FRU Device ID 0.

REQ 3.366 An (E)MMC or MCMC that does not implements the telco alarm FRU **should** return an error Completion Code of "Invalid Command (C1h)" to the "Get Telco Alarm Capability", "Set Telco Alarm State" and "Get Telco Alarm State" commands.

Property of CERN - For Internal Use Only – External Distribution Prohibited

REQ 3.367 The (E)MMC or MCMC that implements the telco alarm FRU **shall** set alarm state, as specified by the "Set Telco Alarm State" command if the alarm can be controlled.

REQ 3.368 The (E)MMC or MCMC that implements the telco alarm FRU **shall** implement a Telco Alarm Input sensor, with its associated SDR, and respond to the "Get Sensor Reading" command as described in Table 3-44.

REQ 3.369 The (E)MMC or MCMC that implements the telco alarm FRU **shall** send an event message, as described in Table 3-43, from its Telco Alarm Input sensor to the event receiver when the connector Minor Reset, Major Reset inputs or the optional alarm cutoff input change state and **shall** indicate the latest state of these inputs in the event message.

REQ 3.370 When the (E)MMC or MCMC that implements the telco alarm FRU receives a "Set Event Receiver" command, it **shall** send a Telco Alarm Input event message to indicate the current Major Reset, Minor Reset and optional cutoff button input states.

REQ 3.371 If the Minor Reset input is asserted, the telco alarm function **shall** clear its minor alarm if the *Autonomous Minor reset* bit is set in the *Alarm Capabilities* field, and **shall not** do so if that capabilities bit is not set.

REQ 3.372 If the Major Reset input is asserted, the telco alarm function **shall** clear its major alarm if the *Autonomous Major reset* bit is set in the *Alarm Capabilities* field, and **shall not** do so if that capabilities bit is not set.

REQ 3.373 If the optional alarm cutoff is asserted the telco alarm function **shall** perform an implementation-defined cutoff action if the *Autonomous alarm cutoff* bit is set in the *Alarm Capabilities* field, and **shall not** do so if that capabilities bit is not set.

REQ 3.374 Each Carrier Manager **may** locate the (E)MMC or MCMC in its MicroTCA Carrier that implements the telco alarm FRU by sending the "Get Telco Alarm Capability" command and getting a "Command Completed Normally (00h)" Completion Code response. Alternatively, Carrier Managers **may** locate the telco alarm FRU by detecting the Telco Alarm Input SDR in the FRU's Device SDR.

REQ 3.375 Each Carrier Manager **shall** populate a FRU Device Locator Record and Telco Alarm Input SDR in its Device SDR Repository for the telco alarm function, if present in its MicroTCA Carrier, with the Carrier Manager FRU Device ID 79.

REQ 3.376 Each Carrier Manager **shall** remove the telco alarm FRU Device Locator Record and Telco Alarm Input SDR from its Device SDR Repository when the FRU that implements the telco alarm is removed from the MicroTCA Carrier.

REQ 3.377 Each Carrier Manager **shall** forward "Get Telco Alarm Capability", "Set Telco Alarm State" and "Get Telco Alarm State" commands sent to its Carrier Manager FRU Device ID 79 to the (E)MMC or MCMC that implements the telco alarm FRU with the FRU Device ID modified to 0. Carrier Managers **shall** track the corresponding responses and forward them to the originator of the requests.

Property of CERN - For Internal Use Only – External Distribution Prohibited

3.12 System Event Log

¶ 233 The System Event Log (SEL) is the collection of IPMI events that are generated by all MCMCs on MCHs, MMCs on AdvancedMCs, and EMMCs on PM, CU, and OEM Modules in a MicroTCA Shelf. Each Carrier Manager forwards events to the Shelf Manager, where the centralized SEL for the entire Shelf is maintained. In a traditional IPMI system, the BMC solely maintains the SEL device.

¶ 234 In MicroTCA, event entries can be stored in a SEL device on the Carrier Manager or (E)MMC, in addition to the centralized SEL device that is maintained by the Shelf Manager. By duplicating such information and storing it in non-volatile memory, the event logs for a MicroTCA Carrier will stay with the management controller closest to the source of the event. This allows for better tracking of error conditions and facilitates troubleshooting and repair of the MicroTCA Carrier.

Requirements

REQ 3.378 Each Carrier Manager **shall** act as the event receiver over IPMB-L and IPMB-0 interfaces and implement corresponding mandatory commands found in Section 23 “Event Commands” of the IPMI specification.

REQ 3.379 Carrier Managers **shall** act as event generators and implement the corresponding mandatory commands found in Section 23 “Event Commands” of the IPMI specification.

REQ 3.380 Carrier Managers **shall** forward events to the configured event receiver over the Shelf-Carrier Manager Interface.

REQ 3.381 Carrier Managers **should** implement an IPMI-compliant SEL device.

REQ 3.382 If a SEL device is implemented, each Carrier Manager **shall** log local MCH and Managed FRU events in its SEL, in compliance with IPMI.

REQ 3.383 Each MicroTCA Shelf Manager **shall** implement an IPMI-compliant SEL and log received events, therein.

3.13 Sensor management

3.13.1 Guidelines and requirements for FRU sensor events

¶ 235 As in AdvancedTCA systems, FRUs in a MicroTCA Shelf may contain a variety of sensor devices, depending on the capabilities of the FRU. As explained in Section 3.9.4, “Abnormal cooling operation”, each MCMC on an MCH and EMMC on a PM, CU, or OEM Module in a Shelf must measure its temperatures and generate events if an abnormal temperature level occurs. Shelf Managers react to abnormal temperature events by improving the cooling capability of the Shelf (e.g., by speeding up the fans). Other sensors such as voltage, current, airflow, etc. may be included as needed to ensure proper monitoring of the FRUs.

Requirements

REQ 3.384 The “Get Sensor Reading” command **shall** be implemented by MCMCs and EMMCs. Carrier Managers can issue this command at any time to get sensor status. This command can also be used when a Carrier Manager regains contact with a Module after a loss of contact (see Section 3.7.4, “Abnormal situation handling”).

Property of CERN - For Internal Use Only – External Distribution Prohibited

REQ 3.385 When Management Power (MP) is applied to the MCMC or EMMC and its associated management circuitry and the ENABLE# signal is active and a valid Geographic Address has been read, MCMCs and EMMCs **shall** read the state of the Module Handle and send a Module Hot Swap (Module Handle Opened or Module Handle Closed) event message appropriately, as specified in Table 3-8, "Module Hot Swap event message" of the AMC.0 specification.

REQ 3.386 When the Module Handle state transitions to closed, MCMCs and EMMCs **shall** send a Module Hot Swap (Module Handle Closed) event message as specified in Table 3-8, "Module Hot Swap event message" of the AMC.0 specification.

REQ 3.387 When the Module Handle state transitions to open, MCMCs and EMMCs **shall** send a Module Hot Swap (Module Handle Opened) event message as specified in Table 3-8, "Module Hot Swap event message" of the AMC.0 specification.

REQ 3.388 MCMCs and EMMCs **shall** periodically resend Module Hot Swap event messages until either a "Command Completed Normally (00h)" Completion Code has been returned from the Carrier Manager, or the Module wants to send a new Module Hot Swap event message.

3.13.2 MCMC SDR requirements

¶ 236 Each MCMC implements the mandatory sensor access commands as described in the IPMI Specification, Section 29 "Sensor Device Commands."

Requirements

REQ 3.389 MCMCs that support redundant operation **shall** implement a Module Hot Swap Sensor and associated SDR. MCMCs that do not support redundant operation **may** achieve the mandatory effects of a Module Hot Swap Sensor via implementation-specific communication with the Carrier Manager.

REQ 3.390 MCMCs **shall** support the IPMI commands "Get Device SDR Info", "Get Device SDR" and "Reserve Device SDR Repository". (See Chapter 29 of the IPMI specification.)

REQ 3.391 The MCMC Device SDR Repository **shall** have a static sensor population. (See Table 29-2 of the IPMI specification.) The number of MCMC SDRs is fixed. All MCMC sensors **shall** be assigned to LUN 0 of the MCMC.

REQ 3.392 Each MCMC **shall** use its own Site Number + 60h as a device-relative entity instance number.

REQ 3.393 Each MCMC **shall** use MCH Entity ID C2h for its device SDRs.

REQ 3.394 Each MCMC **shall** have one Management Controller Device Locator Record (SDR type 12h).

REQ 3.395 MCMCs **shall not** have FRU locator records (SDR type 11h), as only one FRU may be represented by each MCMC.

REQ 3.396 MCMCs **shall not** expect any Initialization Agent action from the Carrier Manager.

REQ 3.397 Each MCMC **shall** initialize its sensors and set the event receiver address to 20h and event receiver LUN to 0 on reset.

Property of CERN - For Internal Use Only – External Distribution Prohibited

3.13.3 EMMC SDR requirements

¶ 237 EMMCs on the PM, CU and OEM Modules implement the mandatory sensor access commands as described in the IPMI specification, Section 29 “Sensor Device Commands.”

Requirements

REQ 3.398 Each EMMC **shall** implement a Module Hot Swap Sensor and associated SDR.

REQ 3.399 EMMCs **shall** support the IPMI commands “Get Device SDR Info”, “Get Device SDR” and “Reserve Device SDR Repository”. (See Chapter 29 of the IPMI specification.)

REQ 3.400 Each EMMC Device SDR Repository **shall** have a static sensor population. (See Table 29-2 of the IPMI specification.) The number of EMMC SDRs is fixed. All EMMC sensors **shall** be assigned to LUN 0 of the EMMC.

REQ 3.401 Each EMMC **shall** use its own Site Number + 60h as a device-relative entity instance number.

REQ 3.402 Each PM EMMC **shall** use PM Entity ID 0Ah for its device SDRs.

REQ 3.403 Each CU EMMC **shall** use CU Entity ID 1Eh for its device SDRs.

REQ 3.404 Each EMMC **shall** have one Management Controller Device Locator Record (SDR type 12h).

REQ 3.405 EMMCs **shall not** have FRU locator records (SDR type 11h), as only one FRU may be represented by each EMMC.

REQ 3.406 EMMCs **shall not** expect any Initialization Agent action from the Carrier Manager.

REQ 3.407 Each EMMC **shall** initialize its sensors and set the event receiver address to 20h and event receiver LUN to 0 on reset.

3.13.4 Carrier Manager SDR requirements

¶ 238 The Carrier Manager implements device SDRs for each sensor exposed to the Shelf Manager. In addition, the Carrier Manager implements the mandatory sensor access commands, as described in the IPMI Specification, Section 29 “Sensor Device Commands.” The MicroTCA specification makes additional commands mandatory for the Carrier Manager, as listed under the Carrier Manager column in Table 3-46, “Command number assignments and requirements” of this specification. In IPMI terminology, the Carrier Manager and the MCMC are considered to be “Dynamic Sensor Devices.” In standard IPMI, these devices are discovered by responding to the “Broadcast Get Device ID” message. For MicroTCA systems, the Carrier Manager reports FRU presence through the FRU Hot Swap Event Message, described in Section 3.2.4, “Managed FRU operational state management” of the AdvancedTCA Base specification.

¶ 239 The Carrier Manager uses predefined FRU Device IDs for all Modules installed in a MicroTCA Carrier, based on Site Type and Site Number. The local FRU Device ID for an (E)MMC is always 0. The Carrier Manager assigns unique FRU Device IDs to all (E)MMCs, as specified in Table 3-3, “Carrier Manager FRU Device IDs.” (E)MMC SDRs are linked with a Module using the entity fields of the SDR. The Entity ID identifies that SDR as coming from an MCH, AdvancedMC, PM, CU or OEM Module FRU, and the entity instance is set to the Site Number + 60h. 60h is added to make the entity instance device-relative, in accordance with Section 3.4.3 “Entities” in the AdvancedTCA Base specification. Refer to

Property of CERN - For Internal Use Only – External Distribution Prohibited

this section of the AdvancedTCA specification and to Chapter 33.1 “System- and Device-relative Entity Instance Values” of the IPMI specification for more information on IPMI entities.

¶ 240 The Carrier Manager can maintain a table for the translation of the Carrier Manager-wide unique sensor number, sensor LUN, and FRU Device ID to the (E)MMC’s sensor number, sensor LUN, and FRU Device ID. When a Carrier Manager receives a request over the Shelf-Carrier Manager Interface for an (E)MMC’s sensor or FRU data, the Carrier Manager substitutes the received sensor number, sensor LUN, or FRU Device ID with the target (E)MMC’s sensor number, sensor LUN, or FRU Device ID and sends the request over IPMB-L to the MMC or over IPMB-0 to the EMMC. The Carrier Manager then returns the requested data, substituting the (E)MMC’s identifying data with the Carrier Manager’s identifying data. The Carrier Manager is also responsible for redirecting events generated on IPMB-L or IPMB-0 to the Shelf event receiver over the Shelf-Carrier Manager Interface. In doing so, the Carrier Manager substitutes the event generator ID with its own ID and substitutes the sensor number and sensor LUN from the received message with the Carrier Manager-wide unique sensor number and sensor LUN. The message is then transmitted over the Shelf-Carrier Manager Interface.

Requirements

REQ 3.408 Carrier Managers **shall** implement the mandatory sensor access commands, as described in the IPMI specification Section 29 “Sensor Device Commands.”

REQ 3.409 Carrier Managers **shall** implement the mandatory IPM Controller requirements, as defined in Section 3.4.1 “Sensor Data Records” of the AdvancedTCA specification.

REQ 3.410 Each Carrier Manager **shall** merge a Module's device SDRs with its Device SDR Repository after the Module starts responding to “Get Device ID” commands.

REQ 3.411 Each Carrier Manager’s Device SDR Repository **shall** use an Entity ID for a Module as defined in Table 3-49, “MicroTCA Entity ID assignments” and the Module Site Number + 60h as device-relative entity instances for Module SDRs.

REQ 3.412 Each Carrier Manager **shall** use the Shelf-Carrier Manager Interface logical IPMB address 80h + (Carrier Number * 2) in Sensor Data Records as sensor owner ID/ device slave address for all sensors that it manages.

REQ 3.413 Each Carrier Manager **shall** convert the Management Controller Device Locator Records of (E)MMCs to FRU Device Locator Records before adding them to its Device SDR Repository.

REQ 3.414 The converted FRU Device Locator Records cached by Carrier Managers **shall** reflect the Carrier Manager FRU Device ID.

REQ 3.415 A Carrier Manager **shall not** send an M1 to M2 transition event message to its Shelf Manager’s event receiver until it finishes Module SDR merging.

REQ 3.416 Carrier Managers **may** disable event message generation by a Module via the “Set Event Receiver” command until completion of Module SDR merging. Carrier Managers **shall** enable Module event generation after completing the merge using the IPMI “Set Event Receiver” command.

REQ 3.417 Each Carrier Manager **shall** assign unique sensor numbers to all merged Module sensors in its Device SDR Repository. Carrier Managers **shall** retain mapping information for the original Module’s sensor number, LUN, and IPMB address.

REQ 3.418 Sensor number and sensor LUN representation in each Carrier Manager’s Device SDR Repository **shall** be preserved when other Module sensors are merged as a result of

Property of CERN - For Internal Use Only – External Distribution Prohibited

additional Hot Swap operations. The sensor numbers of removed sensors **may** be reused.

REQ 3.419 Each Carrier Manager's Device SDR Repository sensor numbering **should** be preserved in case of Carrier Manager resets caused by watchdog or IPMI reset commands.

REQ 3.420 If a Carrier Manager's Device SDR Repository sensor numbering changes because of MCMC resets, each Carrier Manager **shall** implement a Version Change sensor and **shall** send a Version Change event message to the event receiver (Shelf Manager) as detailed in REQ 3.116 and REQ 3.117.

REQ 3.421 Each Carrier Manager **shall** remove all SDRs from its Device SDR Repository for a Module when it detects the removal of the Module. The Entity ID of the Module and entity instance (Module Site Number + 60h) fields **shall** be used to select which SDRs to remove.

REQ 3.422 A Carrier Manager's Device SDR Repository **shall not** change if an MCMC or (E)MMC is reset via the negation of ENABLE# or via a watchdog reset.

REQ 3.423 A Carrier Manager's Device SDR Repository **shall** report a dynamic sensor population. (See Table 29-2 in the IPMI specification). The number and order of a Carrier Manager's SDRs **may** change.

REQ 3.424 Carrier Managers **shall** forward sensor commands to a Module if the command is addressed to the Module's sensor. Carrier Managers **shall** reformat forwarded commands with the Module's IPMB address, sensor number, and sensor LUN.

REQ 3.425 Carrier Managers **shall** forward sensor command responses from the Module to the source of the original command. A Carrier Manager **shall** reformat forwarded replies using its Shelf-Carrier Manager Interface logical IPMB address, sensor number and sensor LUN from its Device SDR Repository.

REQ 3.426 Carrier Managers **shall** forward Module sensor events, except for Module Hot Swap events, from IPMB-L and IPMB-0 to its Shelf event receiver over the Shelf-Carrier Manager Interface. A Carrier Manager **shall** reformat forwarded events using its Shelf-Carrier Manager Interface logical IPMB address, and its sensor number and sensor LUN from its Device SDR Repository.

REQ 3.427 As an exception to REQ 3.426, Carrier Managers **shall not** forward Power Channel Notification events, except when those events indicate global status changes.

REQ 3.428 Carrier Managers **shall** forward event acknowledgements from the Shelf event receiver to the Module. Each Carrier Manager **shall** reformat forwarded acknowledgements and substitute the Module's IPMB-L or IPMB-0 address and sensor LUN.

REQ 3.429 The AdvancedTCA "Get Device Locator Record ID" command, as implemented by each Carrier Manager, **shall** return the converted FRU Device Locator Record ID from its Device SDR Repository or Completion Code "Sensor not Present (CBh)" if the designated Module is not installed.

REQ 3.430 Each Carrier Manager **shall** implement the extended form of the "Get Device Locator Record ID" command, as defined in Table 3-30, "Get Device Locator Record ID" of the AMC.0 specification

REQ 3.431 If the optional bytes 3-4 of the "Get Device Locator Record ID" command are present, each Carrier Manager **shall** return the record IDs for the next sequential SDR associated with the FRU Device ID designated in the request and contained in its Device SDR Repository. The SDR record ID **may** change if the Carrier Manager's Device SDR Repository reservation is cancelled (see Chapter 27.11.2 of the IPMI specification).

Property of CERN - For Internal Use Only – External Distribution Prohibited

3.14 FRU Information

¶ 241 Section 1.6.11 through Section 1.6.14 of the IPMI specification provide an overview of FRU Information principles and implementations. While the IPMI specification recommends that each management controller implement the "FRU Inventory Device" commands, MicroTCA mandates them for the Shelf Manager, Carrier Manager, MCMC and EMMC. In order for FRU Information to be accessed and interpreted appropriately, the contents and format of the data must be known. This section identifies FRU Information requirements for Shelf Managers, Carrier Managers, MCMCs and EMMCs.

Requirement

REQ 3.432 MCMC, PM, and CU FRU Information **shall** contain valid data in all the predefined fields of the of the Board Information Area of the FRU Information.

3.14.1 EMMC FRU Information

¶ 242 The PM, CU and OEM Module EMMC FRU Information requirements follow the AdvancedMC based MMC requirements except for E-Keying.

Requirements

REQ 3.433 EMMCs and EMMC FRU Information **shall** meet all requirements specified in AMC.0. Section 3.12.1.2 "MMC requirements" except as specified in this specification.

REQ 3.434 As an exception to REQ 3.433, EMMC FRU Information **shall not** contain the AMC Point-to-Point connectivity records.

REQ 3.435 PM FRU Information **shall** include a Power Module Capability record as defined in Table 3-27, "Power Module Capability record."

REQ 3.436 CU, and OEM Module FRU Information **shall** contain a Module Current Requirement record defined in Table 3-10 "Module Current Requirements record" in the AMC.0 specification in their FRU Information.

REQ 3.437 PM FRU Information **shall not** contain a Module Current Requirement record.

3.14.2 MCMC FRU Information

¶ 243 The MCMC FRU Information requirement follow the AdvancedMC-based MMC requirements and contains records describing the MCH.

Requirements

REQ 3.438 MCMCs and MCMC FRU Information **shall** meet all requirements specified in AMC.0. Section 3.12.1.2 "MMC requirements" except as specified in this specification.

REQ 3.439 The FRU Information records for the MCH **shall** be found in the MCMC FRU Information located on the MCH.

REQ 3.440 The MCMC FRU Information **shall** contain the AMC Point-to-Point connectivity records for the MCH, as specified in Section 3.10, "Electronic Keying".

Property of CERN - For Internal Use Only – External Distribution Prohibited

REQ 3.441 The MCMC FRU Information **shall** contain the Module Current Requirements record for the MCH, as specified in Section 3.7.1, "Module Current Requirements record" of the AdvancedMC specification.

REQ 3.442 The MCMC FRU Information **shall** contain the additional MCMC FRU Information Multi Records as specified in this specification.

3.14.3 MicroTCA Carrier FRU Information

¶ 244 The MicroTCA Carrier FRU Information contains records describing the MicroTCA Carrier.

Requirements

REQ 3.443 The Carrier Manager **shall** forward the FRU Inventory Device IPMI commands (specified in Chapter 28 of the IPMI specification), that are directed to logical FRU Device IDs defined in Table 3-3, on the MicroTCA Carrier to the corresponding MMCs (FRU Device ID 0 of the MMCs) via IPMB-L or EMMC (FRU Device ID 0 of the EMMCs) via IPMB-0. The Carrier Manager **shall** track the corresponding responses and send them to the originators of the requests.

REQ 3.444 MicroTCA Carrier FRU Information **shall** contain the record as specified in Section 3.3.3, "Carrier Manager IP address" of this specification.

REQ 3.445 MicroTCA Carrier FRU Information **shall** contain all the records as specified in Section 3.3.8, "Location information" of this specification.

REQ 3.446 MicroTCA Carrier FRU Information **shall** contain all the records as specified in Section 3.8, "Power management" of this specification.

REQ 3.447 MicroTCA Carrier FRU Information **shall** contain valid data in all the predefined fields of the Board Info Area.

REQ 3.448 MicroTCA Carriers that are sold as independent products **shall** contain valid data in all predefined fields in the Carrier FRU Information Product Info Area.

REQ 3.449 The MicroTCA Carrier FRU Information **shall not** contain a Chassis Info Area.

REQ 3.450 The MicroTCA Carrier FRU Information **shall** contain the additional Carrier FRU Information Multi Records as specified in this specification.

3.14.4 Shelf FRU Information

¶ 245 In AdvancedTCA, the Shelf Manager manages power and electronic keying, while in MicroTCA the Carrier Manager performs these management functions. The MicroTCA Shelf Manager uses new Shelf FRU Information records defined in this specification to perform its FRU and cooling management. Therefore, none of the AdvancedTCA-defined Shelf FRU Information records are used in MicroTCA Shelf FRU Information.

Requirements

REQ 3.451 MicroTCA Shelf FRU Information **shall not** include AdvancedTCA-defined records.

REQ 3.452 MicroTCA Shelf FRU Information **may** include the Board Info Area and, if provided, **shall** fill in all the predefined fields.

REQ 3.453 MicroTCA Shelves that are sold as independent products **shall** contain valid data in all predefined fields in the Shelf FRU Information Product Info Area.

Property of CERN - For Internal Use Only – External Distribution Prohibited

REQ 3.454 MicroTCA Shelf FRU Information **shall** contain a “Chassis Info Area” and the additional Shelf FRU Information Multi Records as specified in this specification.

REQ 3.455 MicroTCA Shelf FRU Information **shall** contain all the records as specified in Section 3.3.8, “Location information” of this specification.

REQ 3.456 MicroTCA Shelf FRU Information **shall** contain all the records as specified in Section 3.4.4, “Shelf Manager IP address” of this specification.

REQ 3.457 MicroTCA Shelf FRU Information **shall** contain all the records as specified in Section 3.9.1, “Fan geography” of this specification.

3.15 IPMI message bridging

¶ 246 The MicroTCA management hierarchy includes the System Manager, the Shelf Manager, the Carrier Manager, and (E)MMCs. The Shelf Manager can send an IPMI command to an (E)MMC by using the “Send Message” command with response tracking to bridge the IPMI command message through the Carrier Manager. Similarly, the “Send Message” command can be used by an (E)MMC to bridge an IPMI message through the Carrier Manager to the Shelf Manager. Refer to the IPMI specification Section 18.7 “Send Message Command” and to the AdvancedMC specification Section 3.13 “Explicit message bridging” for the details of using the “Send Message” command with response tracking.

¶ 247 The MicroTCA Shelf-Carrier Manager Interface, described in Section 3.4.3, represents a logical IPMB interface between the Shelf Manager and Carrier Managers. IPMI messaging Channel 0 represents this logical IPMB in the MicroTCA Shelf Manager when processing the “Send Message” command. When a System Manager sends a “Send Message” command to IPMI messaging Channel 0, the Shelf Manager forwards the encapsulated message to a Carrier Manager over the Shelf-Carrier Manager Interface and tracks the response as specified in Section 3.3.1.3 “IPMI-oriented System Manager communications” of the AdvancedTCA specification.

¶ 248 The remainder of this subsection explains how a “Send Message” command issued to a Carrier Manager can be used to bridge an IPMI command to an (E)MMC via IPMB-L or IPMB-0, or to the Shelf Manager via the Shelf-Carrier Manager Interface, and provides corresponding specific requirements.

3.15.1 Message bridging process

¶ 249 The Carrier Manager supports IPMI message bridging to (E)MMCs with the “Send Message” command with response tracking, as specified in the AdvancedMC specification. IPMI messaging Channel 7 represents IPMB-L and IPMB-0 on the Carrier Manager when processing the “Send Message” command. When the Carrier Manager receives a “Send Message” command to IPMI messaging Channel 7 from the Shelf Manager, it extracts the encapsulated message and redirects it to the targeted (E)MMC. If the (E)MMC’s response is received, the Carrier Manager reformats the response and sends it to the Shelf Manager.

¶ 250 When sending a bridged message to an (E)MMC, the requestor does not need to be aware of which IPMB the targeted (E)MMC is connected to. The Carrier Manager selects the IPMB of the targeted (E)MMC based upon the IPMB address.

Property of CERN - For Internal Use Only – External Distribution Prohibited

¶ 251 The Carrier Manager also supports message bridging to the Shelf Manager from an (E)MMC. When the Carrier Manager receives a "Send Message" command to IPMI messaging Channel 0 from an (E)MMC, it extracts the message and redirects the command to the Shelf Manager over the Shelf-Carrier Manager Interface. If the Shelf Manager's response is received, the Carrier Manager reformats the response and sends it to the (E)MMC.

Requirements:

REQ 3.458 Carrier Managers **shall** support the "Send Message" command with response tracking, as specified in Section 3.13 "Explicit message bridging" of the AdvancedMC specification.

REQ 3.459 Carrier Managers **shall** implement IPMB-L and IPMB-0 as IPMI messaging Channel number 7.

REQ 3.460 Carrier Managers **shall** select IPMB-0 or IPMB-L based on the responder ID IPMB address, where AdvancedMC MMC IPMB addresses, as specified in Table 3-5, are on IPMB-L, and MCMC, PM, CU, and OEM EMMC IPMB addresses, as specified in Table 3-15, Table 3-7, and Section 3.2.3, are on IPMB-0.

REQ 3.461 Carrier Managers **shall** send a "Send Message" command reply containing a Completion Code of "Timeout while processing command (C3h)" if it does not receive a timely (within IPMI command response time) response from the (E)MMC responder.

REQ 3.462 The size of IPMI messages transmitted over IPMB-0 or IPMB-L **shall not** exceed 32 bytes.

REQ 3.463 Carrier Managers **shall** bridge the "Send Message" command that targets IPMI messaging Channel 0 to the Shelf-Carrier Manager Interface. The intent is to allow an (E)MMC to send a message to the Shelf Manager. See REQ 3.194 and REQ 3.195.

REQ 3.464 Carrier Managers **shall** return an IPMI Completion Code of "Parameter out of range (C9h)" for a "Send Message" command that targets IPMI messaging Channel 0 when received over the Shelf-Carrier Manager Interface.

REQ 3.465 Shelf Managers **shall** support the "Send Message" command with response tracking, as specified in Section 18.7 "Send Message Command" of the IPMI specification.

REQ 3.466 MicroTCA Shelf Managers **shall** bridge the "Send Message" command that targets IPMI messaging Channel 0 to the Shelf-Carrier Manager Interface. See REQ 3.194 and REQ 3.195.

REQ 3.467 (E)MMCs **should** support the "Send Message" command, as specified in the AdvancedMC specification.

REQ 3.468 If the "Send Message" command is supported, (E)MMCs **shall** implement IPMB-L and IPMB-0 as IPMI messaging Channel number 0.

3.16 IPMI functions and commands

¶ 252 This section contains annotated and augmented versions of tables from the IPMI specification and AdvancedTCA Base specification that are used to summarize the function and command requirements (using the notation "M" for Mandatory, "O" for Optional, "O/M" for Optional/ Mandatory and "NA" for Not Applicable). The designation "O/M" is used in a similar manner as in the IPMI specifications, to designate functionality that is mandatory if certain conditions apply and optional otherwise. The designation "NA" is used to indicate that a command must not be implemented in the designated context. The conditions under which a

Property of CERN - For Internal Use Only – External Distribution Prohibited

command is mandatory or not applicable are explained in notes associated with the table cell for that command. Otherwise, the command is optional. When a command group is marked as optional or optional/mandatory, commands within the group that are marked as mandatory are only required if any of the commands in the group are implemented.

3.16.1 Required IPMI functions

¶ 253 The following table summarizes the major required and optional IPMI functions for a MicroTCA Shelf Manager, Carrier Manager, MCMC, and EMMC. For each functional area, the table shows whether it is mandatory (M) or optional (O). Refer to the introduction of Section 3.16, "IPMI functions and commands" for clarifications on the optional/mandatory (O/M) markings.

¶ 254 Supplementary comments in the right column elaborate on the MicroTCA differences, where appropriate. See Section 3.1 "Required BMC Functions" of the IPMI specification for the original table on which this one is based.

¶ 255 The MCMC is listed with the EMMC, as it functions as the management controller for the MCH with similar functions as an EMMC.

Table 3-45 Required MicroTCA IPMI functions

Function	Shelf Man. req.	Carrier Man. req.	EMMC MCMC req.	Supplementary comments for MicroTCA
IPM Device	M	M	M	
System Interface (BT, KCS, or SMIC)	O	O	O	This specification does not mandate that the Shelf Manager or management controller support any of the standard IPMI System Interfaces.
SDR Repository	M	O	O	The Shelf Manager complies with AdvancedTCA Shelf Manager SDR requirements and the Carrier Manager complies with the AMC.0 Carrier SDR requirements.
IPMB Interface	N/A	M	M	Two physical IPMBs ("IPMB-A" and "IPMB-B") are required and are combined into a single, logical "IPMB-0," Additionally, IPMB-L is required for MCMCs.
Watchdog Timer	O	O	O	Support for a BMC Watchdog Timer in a FRU is mandatory if there is a Payload function associated with the FRU; otherwise, implementing the Watchdog Timer is optional.
Event Receiver	M	M	O	Since support for IPMB-0 and IPMB-L are required by this specification, the Carrier Manager must accept Event Messages from IPMB-0 and IPMB-L. The Shelf Manager must accept Event Messages from the Shelf-Carrier Manager Interface.
SEL Interface	M	O	O	The Shelf Manager provides a Shelf-wide view of the SEL. In addition, a Carrier Manager may provide a SEL that contains the events associated with FRUs that they represent.
FRU Inventory	M	M	M	Each management controller must support FRU access.

Property of CERN - For Internal Use Only – External Distribution Prohibited

Table 3-45 Required MicroTCA IPMI functions (continued)

Function	Shelf Man. req.	Carrier Man. req.	EMMC MCMC req.	Supplementary comments for MicroTCA
Initialization Agent	O	O	M	Individual MCMCs and EMMCs are responsible for initializing the event generation and sensors on the local FRU(s). They must not expect the Shelf Manager to perform that function.
Sensors	M	M	M	MCMCs and EMMCs must support some specific sensors, including the Module Hot Swap Sensor, the IPMB Link Status sensor, and temperature sensors. Shelf and Carrier Managers must support some specific sensors, including the Hot Swap sensor for each FRU present in a MicroTCA Carrier.
Internal Event Generation	O	O	O	
External Event Generation	O/M	M	M	If a Shelf Manager is designed to function with one or more redundant instances, it must support External Event Generation; otherwise, this function is optional. The Carrier Manager must be able to send Event Messages over the Shelf-Carrier Manager Interface.
PCI Management Bus Interface	O	O	O	
LAN Messaging	M	O/M	O	The Shelf-Carrier Manager Interface between the remote Shelf Manager and Carrier Manager. If the Shelf Manager is local to the Carrier Manager, the Carrier Manager need not implement LAN messaging. The Shelf Manager must provide the RMCP interface (see AdvancedTCA Section 3.3.1.3, “IPMI-oriented System Manager communications.”)
LAN Alerting	O	O	O	
Serial Messaging	O	O	O	The requirements on functions indented immediately below this function only apply if this function is implemented.
Basic Mode	M	M	M	
PPP Mode	O	O	O	
Terminal Mode	O	O	O	
Direct Connect Mode	M	M	M	
Modem Connect Mode	O	O	O	
Bridging Support	M	O/M	O/M	This function is mandatory for a FRU if the FRU implements a Payload Interface.
Dial Page	O	O	O	
PPP Alerting	O	O	O	

Property of CERN - For Internal Use Only – External Distribution Prohibited

Table 3-45 Required MicroTCA IPMI functions (continued)

Function	Shelf Man. req.	Carrier Man. req.	EMMC MCMC req.	Supplementary comments for MicroTCA
Callback	O	O	O	The requirements on functions indented immediately below this function only apply if this function is implemented.
Basic Mode Callback	M	M	M	
PPP Mode Callback	O	O	O	
CBCP Callback	O	O	O	
Platform Event Filtering (PEF) and Alert Policies	O/M	O	O	The PEF and Alert Policies function is mandatory if the Shelf Manager implements LAN Alerting.
PICMG OEM Commands	M	M	M	The Shelf Manager shall implement the mandatory Shelf Manager PICMG NetFn commands shown in Table 3-46, "Command number assignments and requirements" Each Manager and management controller **shall** implement the mandatory PICMG NetFn commands shown in that same section

3.16.2 Command assignments

¶ 256 Table 3-46, "Command number assignments and requirements," lists the commands defined in the IPMI specification, PICMG 3.0 specification, AMC.0 Specification, and this specification. Each command is grouped by general function, with an indication of whether the command is mandatory (M), not applicable and not implemented (N/A), or optional (O) for Shelf Managers, EMMCs, MCMCs, Carrier Managers and the MCMC Payload Interface.

¶ 257 The requirements in Table 3-46 apply to the MCMC used on the MCH and the EMMC used on MicroTCA CUs, PMs, and OEM Modules, with exceptions as noted. MMC requirements are specified in the AdvancedMC specification and are therefore not listed here.

¶ 258 If the MCMC Payload Interface is implemented, IPMI commands listed under the MCMC Payload Interface column are supported when sent to the management controller from the Payload via LUN 00b.

Property of CERN - For Internal Use Only – External Distribution Prohibited

¶ 259 Unless otherwise specified, the listed IPMI commands, if supported, must be accessible through LUN 00b on IPMB or IP interfaces. This table is based on the corresponding set of tables in the IPMI specification that define command requirements for each of the general functions.

Table 3-46 Command number assignments and requirements

	IPMI Spec section	NetFn	CMD	Shelf Mgr. req	Carrier Mgr. req	MCMC EMMC req.	MCMC Payload Interface req.
IPM Device "Global" Commands				**M**	**M**	**M**	**M**
Get Device ID	17.1	App	01h	M	M	M	M
Cold Reset	17.2	App	02h	O[3]	O[3]	O[3]	O[3]
Warm Reset	17.3	App	03h	O	O	O	O
Get Self Test Results	17.4	App	04h	M	M	M[23]	M
Manufacturing Test On	17.5	App	05h	O	O	O	O
Set ACPI Power State	17.6	App	06h	O	O	O	O
Get ACPI Power State	17.7	App	07h	O[3]	O[3]	O[3]	O[3]
Get Device GUID	17.8	App	08h	O	O	O	O
Broadcast "Get Device ID"[1]	17.9	App	01h	N/A	M[3,4]	M[3,4]	N/A
BMC Watchdog Timer Commands[22]				**O**	**O**	**O**	**M[22]**
Reset Watchdog Timer	21.5	App	22h	O	O	O	M
Set Watchdog Timer	21.6	App	24h	O	O	O	M
Get Watchdog Timer	21.7	App	25h	O	O	O	M
BMC Device and Messaging Commands[5]				**M**	**O**	**O**	**O**
Set BMC Global Enables	18.1	App	2Eh	O/M[5]	O/M[5]	O/M[5]	O/M[5]
Get BMC Global Enables	18.2	App	2Fh	O/M[5]	O/M[5]	O/M[5]	O/M[5]
Clear Message Flags	18.3	App	30h	O/M[5]	O/M[5]	O/M[5]	O/M[5]
Get Message Flags	18.4	App	31h	O/M[5]	O/M[5]	O/M[5]	O/M[5]
Enable Message Channel Receive	18.5	App	32h	O	O	O	O
Get Message	18.6	App	33h	O/M[5]	O/M[5]	O/M[5]	O/M[5]
Send Message	18.7	App	34h	M	M	O/M[5]	M
Read Event Message Buffer	18.8	App	35h	O	O	O	O
Get BT Interface Capabilities	18.9	App	36h	O/M[3,5]	O/M[3,5]	O/M[3,5]	O/M[3,5]

Property of CERN - For Internal Use Only – External Distribution Prohibited

Table 3-46 Command number assignments and requirements (continued)

	IPMI Spec section	NetFn	CMD	Shelf Mgr. req	Carrier Mgr. req	MCMC EMMC req.	MCMC Payload Interface req.
Master Write-Read	18.10	App	52h	O/M [3,5,19]	O/M [3,5,19]	O/M [3,5,19]	O/M [3,5,19]
Get System GUID	18.13	App	37h	O[3]	O[3]	O[3]	O[3]
Get Channel Authentication Capabilities	18.12	App	38h	M	O/M[20]	O[3]	O[3]
Get Session Challenge	18.14	App	39h	M	O/M[20]	O[3]	O[3]
Activate Session	18.15	App	3Ah	M	O/M[20]	O[3]	O[3]
Set Session Privilege Level	18.16	App	3Bh	M	O/M[20]	O[3]	O[3]
Close Session	18.17	App	3Ch	M	O/M[20]	O[3]	O[3]
Get Session Info	18.18	App	3Dh	M	O/M[20]	O[3]	O[3]
Get AuthCode	18.19	App	3Fh	M	O[3]	O[3]	O[3]
Set Channel Access	18.20	App	40h	M	O/M[20]	O[3]	O[3]
Get Channel Access	18.21	App	41h	M	O/M[20]	O[3]	O[3]
Get Channel Info	18.22	App	42h	M	O/M[20]	O[3]	O[3]
Set User Access	18.23	App	43h	M	O/M[20]	O[3]	O[3]
Get User Access	18.24	App	44h	M	O/M[20]	O[3]	O[3]
Set User Name	18.25	App	45h	M	O/M[20]	O[3]	O[3]
Get User Name	18.26	App	46h	M	O/M[20]	O[3]	O[3]
Set User Password	18.27	App	47h	M	O/M[20]	O[3]	O[3]
Chassis Device Commands				**O**	**O**	**O**	**O**
Get Chassis Capabilities	22.1	Chassis	00h	M[6]	O	O	O
Get Chassis Status	22.2	Chassis	01h	M[6]	O	O	O
Chassis Control	22.3	Chassis	02h	M[6]	O	O	O
Chassis Reset	22.4	Chassis	03h	O	O	O	O
Chassis Identify	22.5	Chassis	04h	O	O	O	O
Set Chassis Capabilities	22.6	Chassis	05h	O	O	O	O
Set Power Restore Policy	22.7	Chassis	06h	O	O	O	O
Get System Restart Cause	22.9	Chassis	07h	O[3]	O[3]	O[3]	O[3]
Set System Boot Options	22.10	Chassis	08h	O[3]	O[3]	O[3]	O[3]

Property of CERN - For Internal Use Only – External Distribution Prohibited

Table 3-46 Command number assignments and requirements (continued)

	IPMI Spec section	NetFn	CMD	Shelf Mgr. req	Carrier Mgr. req	MCMC EMMC req.	MCMC Payload Interface req.
Get System Boot Options	22.11	Chassis	09h	O[3]	O[3]	O[3]	O[3]
Get POH Counter	22.12	Chassis	0Fh	O	O	O	O
Event Commands				**M**	**M**	**M**	**M**
Set Event Receiver	23.1	S/E	00h	M	M	M	M
Get Event Receiver	23.2	S/E	01h	M	M	M	M
Platform Event (a.k.a. “Event Message”)	23.3	S/E	02h	M	M	M	M
PEF and Alerting Commands				**O**	**O**	**O**	**O**
Get PEF Capabilities	24.1	S/E	10h	M[3]	M[3]	M[3]	M[3]
Arm PEF Postpone Timer	24.2	S/E	11h	M[3]	M[3]	M[3]	M[3]
Set PEF Configuration Parameters	24.3	S/E	12h	M[3]	M[3]	M[3]	M[3]
Get PEF Configuration Parameters	24.4	S/E	13h	M[3]	M[3]	M[3]	M[3]
Set Last Processed Event ID	24.5	S/E	14h	M[3]	M[3]	M[3]	M[3]
Get Last Processed Event ID	24.6	S/E	15h	M[3]	M[3]	M[3]	M[3]
Alert Immediate	24.7	S/E	16h	O[3]	O[3]	O[3]	O[3]
PET Acknowledge	24.8	S/E	17h	O[3]	O[3]	O[3]	O[3]
Sensor Device Commands				**M**	**M**	**M**	**M**
Get Device SDR Info	29.2	S/E	20h	M	M	M	M
Get Device SDR	29.3	S/E	21h	M[3]	M[3]	M[3]	M[3]
Reserve Device SDR Repository	29.4	S/E	22h	M[3]	M[3]	M[3]	M[3]
Get Sensor Reading Factors	29.5	S/E	23h	O[3]	O[3]	O[3]	O[3]
Set Sensor Hysteresis	29.6	S/E	24h	O	O	O	O
Get Sensor Hysteresis	29.7	S/E	25h	O	O	O	O
Set Sensor Threshold	29.8	S/E	26h	O	O	O	O
Get Sensor Threshold	29.9	S/E	27h	O[3]	O[3]	O[3]	O[3]
Set Sensor Event Enable	29.10	S/E	28h	O	O	O	O
Get Sensor Event Enable	29.11	S/E	29h	O[3]	O[3]	O[3]	O[3]
Re-arm Sensor Events	29.12	S/E	2Ah	O[3]	O[3]	O[3]	O[3]
Get Sensor Event Status	29.13	S/E	2Bh	O	O	O	O

Property of CERN - For Internal Use Only – External Distribution Prohibited

Table 3-46 Command number assignments and requirements (continued)

	IPMI Spec section	NetFn	CMD	Shelf Mgr. req	Carrier Mgr. req	MCMC EMMC req.	MCMC Payload Interface req.
Get Sensor Reading	29.14	S/E	2Dh	M	M	M	M
Set Sensor Type	29.15	S/E	2Eh	O	O	O	O
Get Sensor Type	29.16	S/E	2Fh	O[3]	O[3]	O[3]	O[3]
FRU Device Commands				**M**	**M**	**M**	**M**
Get FRU Inventory Area Info	28.1	Storage	10h	M	M	M	M
Read FRU Data	28.2	Storage	11h	M	M	M	M
Write FRU Data	28.3	Storage	12h	M	M	M	M
SDR Device Commands				**M[10]**	**O**	**O**	**O**
Get SDR Repository Info	27.9	Storage	20h	M	M	M	M
Get SDR Repository Allocation Info	27.10	Storage	21h	O	O	O	O
Reserve SDR Repository	27.11	Storage	22h	M	M	M	M
Get SDR	27.12	Storage	23h	M[3]	M[3]	M[3]	M[3]
Add SDR	27.13	Storage	24h	M[3,17]	M[3]	O/M[3,5]	O/M[3,5]
Partial Add SDR	27.14	Storage	25h	M[3,17]	M[3]	O/M[3,5]	O/M[3,5]
Delete SDR	27.15	Storage	26h	O[3]	O[3]	O[3]	O[3]
Clear SDR Repository	27.16	Storage	27h	M[3,17]	M[3]	O/M[3,5]	O/M[3,5]
Get SDR Repository Time	27.17	Storage	28h	O/M[3]	O/M[3]	O/M[3]	O/M[3]
Set SDR Repository Time	27.18	Storage	29h	O/M[3]	O/M[3]	O/M[3]	O/M[3]
Enter SDR Repository Update Mode	27.19	Storage	2Ah	O[3]	O[3]	O[3]	O[3]
Exit SDR Repository Update Mode	27.20	Storage	2Bh	M[3]	M[3]	M[3]	M[3]
Run Initialization Agent	27.21	Storage	2Ch	O[3]	O[3]	O[3]	O[3]
SEL Device Commands				**M**	**O[18]**	**O[18]**	**O[18]**
Get SEL Info	25.2	Storage	40h	M	M	M	M
Get SEL Allocation Info	25.3	Storage	41h	O	O	O	O
Reserve SEL	25.4	Storage	42h	O[3]	O[3]	O[3]	O[3]
Get SEL Entry	25.5	Storage	43h	M	M	M	M
Add SEL Entry	25.6	Storage	44h	M[3]	M[3]	M[3]	M[3]
Partial Add SEL Entry	25.7	Storage	45h	M[3]	M[3]	M[3]	M[3]

Property of CERN - For Internal Use Only – External Distribution Prohibited

Table 3-46 Command number assignments and requirements (continued)

	IPMI Spec section	NetFn	CMD	Shelf Mgr. req	Carrier Mgr. req	MCMC EMMC req.	MCMC Payload Interface req.
Delete SEL Entry	25.8	Storage	46h	O	O	O	O
Clear SEL	25.9	Storage	47h	M	M	M	M
Get SEL Time	25.10	Storage	48h	M	M	M	M
Set SEL Time	25.11	Storage	49h	M	M	M	M
Get Auxiliary Log Status	25.12	Storage	5Ah	O	O	O	O
Set Auxiliary Log Status	25.13	Storage	5Bh	O[3]	O[3]	O[3]	O[3]
LAN Device Commands				**M**	**O/M[20]**	**O**	**O**
Set LAN Configuration Parameters	19.1	Transport	01h	M	M	M	M
Get LAN Configuration Parameters	19.2	Transport	02h	M	M	M	M
Suspend BMC ARPs	19.3	Transport	03h	O/M[3]	O/M[3]	O/M[3]	O/M[3]
Get IP/UDP/RMCP Statistics	19.4	Transport	04h	O	O	O	O
Serial/Modem Device Commands				**O**	**O**	**O**	**O**
Set Serial/Modem Configuration	20.1	Transport	10h	O/M[3]	O/M[3]	O/M[3]	O/M[3]
Get Serial/Modem Configuration	20.2	Transport	11h	O/M[3]	O/M[3]	O/M[3]	O/M[3]
Set Serial/Modem Mux	20.3	Transport	12h	O[3]	O[3]	O[3]	O[3]
Get TAP Response Codes	20.4	Transport	13h	O[3]	O[3]	O[3]	O[3]
Set PPP UDP Proxy Transmit Data	20.5	Transport	14h	O[3]	O[3]	O[3]	O[3]
Get PPP UDP Proxy Transmit Data	20.6	Transport	15h	O[3]	O[3]	O[3]	O[3]
Send PPP UDP Proxy Packet	20.7	Transport	16h	O[3]	O[3]	O[3]	O[3]
Get PPP UDP Proxy Receive Data	20.8	Transport	17h	O[3]	O[3]	O[3]	O[3]
Serial/Modem Connection Active	20.9	Transport	18h	O/M[3]	O/M[3]	O/M[3]	O/M[3]
Callback	20.10	Transport	19h	O	O	O	O
Set User Callback Options	20.11	Transport	1Ah	O[3]	O[3]	O[3]	O[3]
Get User Callback Options	20.12	Transport	1Bh	O[3]	O[3]	O[3]	O[3]
Bridge Management Commands (ICMB)[2]				**O**	**N/A**	**N/A**	**N/A**
Get Bridge State	[ICMB]	Bridge	00h	O/M[2]	N/A	N/A	N/A
Set Bridge State	[ICMB]	Bridge	01h	O/M[2]	N/A	N/A	N/A

Property of CERN - For Internal Use Only – External Distribution Prohibited

Table 3-46 Command number assignments and requirements (continued)

	IPMI Spec section	NetFn	CMD	Shelf Mgr. req	Carrier Mgr. req	MCMC EMMC req.	MCMC Payload Interface req.
Get ICMB Address	[ICMB]	Bridge	02h	O/M[2]	N/A	N/A	N/A
Set ICMB Address	[ICMB]	Bridge	03h	O/M[2]	N/A	N/A	N/A
Set Bridge Proxy Address	[ICMB]	Bridge	04h	O/M[2]	N/A	N/A	N/A
Get Bridge Statistics	[ICMB]	Bridge	05h	O/M[2]	N/A	N/A	N/A
Get ICMB Capabilities	[ICMB]	Bridge	06h	O/M[2]	N/A	N/A	N/A
Clear Bridge Statistics	[ICMB]	Bridge	08h	O/M[2]	N/A	N/A	N/A
Get Bridge Proxy Address	[ICMB]	Bridge	09h	O/M[2]	N/A	N/A	N/A
Get ICMB Connector Info	[ICMB]	Bridge	0Ah	O/M[2]	N/A	N/A	N/A
Get ICMB Connection ID	[ICMB]	Bridge	0Bh	O/M[2]	N/A	N/A	N/A
Send ICMB Connection ID	[ICMB]	Bridge	0Ch	O/M[2]	N/A	N/A	N/A
Discovery Commands (ICMB)[2]				**O**	**N/A**	**N/A**	**N/A**
Prepare For Discovery	[ICMB]	Bridge	10h	O/M[2]	N/A	N/A	N/A
Get Addresses	[ICMB]	Bridge	11h	O/M[2]	N/A	N/A	N/A
Set Discovered	[ICMB]	Bridge	12h	O/M[2]	N/A	N/A	N/A
Get Chassis Device ID	[ICMB]	Bridge	13h	O/M[2]	N/A	N/A	N/A
Set Chassis Device ID	[ICMB]	Bridge	14h	O/M[2]	N/A	N/A	N/A
Bridging Commands (ICMB)[2]				**O**	**N/A**	**N/A**	**N/A**
Bridge Request	[ICMB]	Bridge	20h	O/M[2]	N/A	N/A	N/A
Bridge Message	[ICMB]	Bridge	21h	O/M[2]	N/A	N/A	N/A
Event Commands (ICMB)[2]				**O**	**N/A**	**N/A**	**N/A**
Get Event Count	[ICMB]	Bridge	30h	O/M[2]	N/A	N/A	N/A
Set Event Destination	[ICMB]	Bridge	31h	O/M[2]	N/A	N/A	N/A
Set Event Reception State	[ICMB]	Bridge	32h	O/M[2]	N/A	N/A	N/A
Send ICMB Event Message	[ICMB]	Bridge	33h	O/M[2]	N/A	N/A	N/A
Get Event Destination	[ICMB]	Bridge	34h	O/M[2]	N/A	N/A	N/A
Get Event Reception State	[ICMB]	Bridge	35h	O/M[2]	N/A	N/A	N/A
OEM Commands for Bridge NetFn				**O**	**N/A**	**N/A**	**N/A**
OEM Commands	[ICMB]	Bridge	C0h-FEh	O/M[2]	N/A	N/A	N/A

Property of CERN - For Internal Use Only – External Distribution Prohibited

Table 3-46 Command number assignments and requirements (continued)

	IPMI Spec section	NetFn	CMD	Shelf Mgr. req	Carrier Mgr. req	MCMC EMMC req.	MCMC Payload Interface req.
Other Bridge Commands				**O**	**N/A**	**N/A**	**N/A**
Error Report	[ICMB]	Bridge	FFh	O/M[2]	N/A	N/A	N/A
AdvancedTCA[7]	**PICMG 3.0 Table**			**M**	**M**	**M**	**M**
Get PICMG Properties	3-10	PICMG	00h	M	M	M	M
Get Address Info	3-9	PICMG	01h	M	M[9]	O	O
Get Shelf Address Info	3-15	PICMG	02h	O	N/A	N/A	N/A
Set Shelf Address Info	3-16	PICMG	03h	O	N/A	N/A	N/A
FRU Control	3-25	PICMG	04h	O/M[21]	O/M[21]	O/M[21]	M
Get FRU LED Properties	3-27	PICMG	05h	M	M	M	M
Get LED Color Capabilities	3-28	PICMG	06h	M	M	M	M
Set FRU LED State	3-29	PICMG	07h	M	M	M	M
Get FRU LED State	3-30	PICMG	08h	M	M	M	M
Set IPMB State	3-65	PICMG	09h	N/A	M[11]	M[11]	N/A
Set FRU Activation Policy	3-19	PICMG	0Ah	M	M	N/A	M
Get FRU Activation Policy	3-20	PICMG	0Bh	M	M	N/A	M
Set FRU Activation	3-18	PICMG	0Ch	M	M	N/A	M
Get Device Locator Record ID	3-35	PICMG	0Dh	O/M[16]	M	M	M
Set Port State	3-54	PICMG	0Eh	N/A	N/A	N/A	N/A
Get Port State	3-55	PICMG	0Fh	N/A	N/A	N/A	N/A
Compute Power Properties	3-77	PICMG	10h	N/A	N/A	N/A	N/A
Set Power Level	3-79	PICMG	11h	N/A	N/A	N/A	N/A
Get Power Level	3-78	PICMG	12h	N/A	N/A	N/A	N/A
Renegotiate Power	3-86	PICMG	13h	N/A	N/A	N/A	N/A
Get Fan Speed Properties	3-81	PICMG	14h	M	M[8]	O/M[13]	N/A
Set Fan Level	3-83	PICMG	15h	M	M[8]	O/M[13]	N/A
Get Fan Level	3-82	PICMG	16h	M	M[8]	O/M[13]	N/A
Bused Resource	3-57	PICMG	17h	N/A	N/A	N/A	N/A
Get IPMB Link Info	3-63	PICMG	18h	N/A	O/M[11]	O/M[11]	O/M[11]

Property of CERN - For Internal Use Only – External Distribution Prohibited

Table 3-46 Command number assignments and requirements (continued)

	IPMI Spec section	NetFn	CMD	Shelf Mgr. req	Carrier Mgr. req	MCMC EMMC req.	MCMC Payload Interface req.
Get Shelf Manager IPMB Address	3-34	PICMG	1Bh	N/A	N/A	N/A	N/A
Set Fan Policy	3-84	PICMG	1Ch	M	N/A	N/A	N/A
Get Fan Policy	3-85	PICMG	1Dh	M	N/A	N/A	N/A
FRU Control Capabilities	3-24	PICMG	1Eh	M	M	M	M
FRU Inventory Device Lock Control	3-37	PICMG	1Fh	M	O	N/A	N/A
FRU Inventory Device Write	3-38	PICMG	20h	M	O	N/A	N/A
Get Shelf Manager IP Addresses	3-32	PICMG	21h	O	N/A	N/A	N/A
Get Shelf Power Allocation	3-80	PICMG	22h	N/A	N/A	N/A	N/A
AdvancedMC[7]	**AMC.0 Table**			**M**	**M**	**M**	**M**
Set AMC Port State	3-27	PICMG	19h	N/A	M	O/M[14]	N/A
Get AMC Port State	3-28	PICMG	1Ah	N/A	M	O/M[14]	M
MicroTCA[7]	**MicroTCA Table**			**M**	**M**	**M**	**M**
Get Location Information	3-20	PICMG	23h	M	M	O	M
Power Channel Control	3-28	PICMG	24h	N/A	M	M[15]	N/A
Get Power Channel Status	3-29	PICMG	25h	N/A	M	M[15]	N/A
PM Reset	3-31	PICMG	26h	N/A	M	M[15]	N/A
Get PM Status	3-32	PICMG	27h	N/A	M	M[15]	N/A
PM Heartbeat	3-33	PICMG	28h	N/A	M	M[15]	N/A
Get Telco Alarm Capability	3-40	PICMG	29h	O	O/M[12]	O/M[12]	O/M[12]
Set Telco Alarm State	3-41	PICMG	2Ah	O	O/M[12]	O/M[12]	O/M[12]
Get Telco Alarm State	3-42	PICMG	2Bh	O	O/M[12]	O/M[12]	O/M[12]

1 This command is sent using the broadcast format on IPMB-0 and IPMB-L. See command description for details.
2 See ICMB specification for details. If an ICMB is implemented, then these commands are mandatory.
3 Additional constraints apply, see appropriate IPMI specification for details.
4 MicroTCA requires IPMB (Channel 0) for Carrier Manager to PM/CU EMMC and MMC communication.
5 MicroTCA does not require the implementation of any of the three IPMI-defined System Interfaces (KCS,

Property of CERN - For Internal Use Only – External Distribution Prohibited

SMIC, or BT) on any IPMC, including an MCMC. MicroTCA designates the interface between an IPMC and its Payload as the Payload Interface but does not constrain the implementation of that interface. If any of the IPMI-defined system interfaces are implemented, these commands are mandatory. These comments also apply to the interface between the MMC and the Payload on an AdvancedMC.

6 The Shelf Manager **shall** apply this command to an entire Shelf.

7 All PICMG specific request commands use the NetFN 2Ch with the PICMG identifier 00h. The response uses NetFN 2Dh with the PICMG identifier 00h.

8 These commands are required for a Carrier Manager of a MicroTCA Carrier that manages Shelf fans.

9 The Carrier Manager implements extensions defined in Table 3-13, "Get Address Info command extensions for Carrier Manager."

10 MicroTCA does not require a centralized SDR Repository in the Shelf Manager, though a partial SDR repository is necessary on the Shelf Manager.

11 This command is required for the IPMB-0 interface on MCMCs and EMMCs. This command is not applicable to MMCs.

12 These commands are only mandatory when the Telco Alarm function is implemented.

13 These commands are only mandatory for Cooling Units.

14 These commands are only mandatory for MCHs and AdvancedMCs that implement AdvancedMC E-Keying-governed interfaces.

15 These commands are only mandatory for PMs.

16 Mandatory group for Shelf Managers that act as either an active or backup Shelf Manager.

17 Mandatory for at least the System Manager Interface on the Shelf Manager.

18 IPMI does not allow for multiple SELs. However, this specification does allow for an optional SEL on each management controller, since it may be appropriate for certain implementations.

19 Since non-intelligent devices are not allowed to attach to either IPMB-A or IPMB-B, this command must not be issued to either of those two buses.

20 Mandatory for a Carrier Manager not located with the Shelf Manager.

21 This command is only mandatory for FRUs with a Payload function. FRU device ID is ignored and should be set to 0 (See AMC.0 Section 3.10, "Module payload control").

22 WDT commands are mandatory only if there is a Payload function associated with the FRU.

23 These commands are only mandatory for MCMCs.

¶ 260 The IPMI commands listed above use the privilege levels defined in the IPMI specification in Appendix G, Table G-1, with a single exception. The following table contains the minimum privilege levels for the PICMG commands and describes the modified requirement for the minimum privilege level for the "Send Message" command.

Table 3-47 Command privilege levels

Command	Minimum privilege level
BMC device and messaging commands	
Send Message	For channel #0 (IPMB): The minimum privilege level of the message contained in the Send Message command For channel #15 (System Interface): User For other channels: Operator
AdvancedTCA commands	
Get PICMG Properties	User
Get Address Info	User
Get Shelf Address Info	User
Set Shelf Address Info	Operator
FRU Control	Operator
Get FRU LED Properties	User
Get LED Color Capabilities	User
Set FRU LED State	Operator

Property of CERN - For Internal Use Only – External Distribution Prohibited

Table 3-47 Command privilege levels (continued)

Command	Minimum privilege level
Get FRU LED State	User
Set IPMB State	Operator
Set FRU Activation Policy	Operator
Get FRU Activation Policy	User
Set FRU Activation	Operator
Get Device Locator Record ID	User
Set Port State	Operator
Get Port State	User
Compute Power Properties	Operator
Set Power Level	Operator
Get Power Level	User
Renegotiate Power	Operator
Get Fan Speed Properties	User
Set Fan Level	Operator
Get Fan Level	User
Bused Resource Control	Operator
Get IPMB Link Info	User
Set Fan Policy	Operator
Get Fan Policy	User
Get Shelf Power Allocation	User
Get Shelf Manager IPMB Address	User
FRU Control Capabilities	User
FRU Inventory Device Lock Control	Operator
FRU Inventory Device Write	Operator
Get Shelf Manager IP Addresses	User
AdvancedMC commands	
Set AMC Port State	Operator
Get AMC Port State	User
MicroTCA commands	
Get Location Information	User
Power Channel Control	Operator
Get Power Channel Status	User
PM Reset	Operator
Get PM Status	User
PM Heartbeat	Operator
Get Telco Alarm Capability	User
Set Telco Alarm State	Operator
Get Telco Alarm State	User

Property of CERN - For Internal Use Only – External Distribution Prohibited

3.17 FRU records, sensors, and Entity IDs

¶ 261 This section summarizes the FRU records used in this MicroTCA specification. This section also summarizes the MicroTCA-defined Entity ID assignments in Table 3-49 and sensors used in MicroTCA in Table 3-50.

Table 3-48 MicroTCA FRU records: type ID = C0h (OEM)

Record description	Record definition	PICMG record ID	Record present in
Module Current Requirement	AMC.0, Table 3-10, “Module Current Requirements record”	16h	AdvancedMC, CU and MCMC FRU Information
Carrier Point-to-Point Connectivity	AMC.0, Table 3-13, “Carrier Point-to-Point Connectivity record”	18h	Carrier FRU Information
AMC Point-to-Point Connectivity	AMC.0, Table 3-16, “AMC Point-to-Point Connectivity record”	19h	MCMC & AdvancedMC FRU Information
FRU Information Partition	Table 3-10, “FRU Information Partition record”	20h	Carrier FRU Information
Carrier Manager IP Link	Table 3-12, “Carrier Manager IP Link record”	21h	Carrier FRU Information
MicroTCA Carrier Information	Table 3-16, “MicroTCA Carrier Information record”	22h	Carrier FRU Information
MicroTCA Shelf Information	Table 3-18, “MicroTCA Shelf Information record”	23h	Logical Shelf FRU Information
MicroTCA Shelf Manager IP Link	Table 3-21, “MicroTCA Shelf Manager IP Link record”	24h	Logical Shelf FRU Information
MicroTCA Carrier Power Policy	Table 3-23, “MicroTCA Carrier Power Policy record”	25h	Carrier FRU Information
MicroTCA Carrier Activation And Power Management	Table 3-25, “MicroTCA Carrier Activation and Power Management record”	26h	Carrier FRU Information
Power Module Capability	Table 3-27, “Power Module Capability record”	27h	PM FRU Information
MicroTCA Fan Geography	Table 3-36, “MicroTCA Fan Geography record”	28h	Logical Shelf FRU Information
OEM Module Description	Table 3-8, “OEM Module description record”	29h	Carrier FRU Information

Property of CERN - For Internal Use Only – External Distribution Prohibited

Table 3-49 MicroTCA Entity ID assignments

Entity type description	Entity ID
PICMG AdvancedMC	C1h
MicroTCA Carrier Hub (MCH)	C2h
Power Module (PM)	0Ah
Cooling Unit (CU)	1Eh
OEM Module	D0h - DFh

Table 3-50 MicroTCA sensors: Event/reading type code = sensor specific (6Fh)

Sensor description	Sensor definition	Sensor type code
FRU Hot Swap	AdvancedTCA Table 3-21, “FRU Hot Swap Event Message”	F0h
IPMB Physical Link	AdvancedTCA Table 3-64, “Physical IPMB-0 Status Change Event Message”	F1h
Module Hot Swap	AdvancedMC Table 3-8, “Module Hot Swap event message”	F2h
Power Channel Notification	MicroTCA Table 3-30, “Power Channel Notification event message”	F3h
Telco Alarm Input	MicroTCA Table 3-43, “Telco Alarm Input event message”	F4h

Property of CERN - For Internal Use Only – External Distribution Prohibited

Power 4

4.1 Overview

¶ 1 This chapter describes the MicroTCA Power Subsystem and its components. The Power Subsystem provides and manages the power necessary for proper operation of the MicroTCA system.

¶ 2 The Power Subsystem is made up of the following elements:

- power source, which provides energy to the system
- power entry elements, which provide an interface between the power source and the rest of the Power Subsystem and implement functions such as power line conditioning
- power conversion elements, which take the source energy and provide the required system voltages in a controlled manner
- distribution elements, including Connectors, Backplane, and power-carrying conductors
- monitoring and telemetry elements
- limiting elements, which protect the loads and distribution system in case of faults
- control elements, managed by the Carrier Manager on a MicroTCA Carrier Hub (MCH)

¶ 3 The Power Subsystem incorporates the following functionality:

- provides energy conversion from input sources to 12 V for Payload Power and 3.3 V for Management Power
- provides independent Payload Power distribution branches for up to twelve AdvancedMCs, up to two MCHs and up to two Cooling Units (note that JSM power is not independent, but typically fed from one of the MCH branches)
- provides independent Management Power distribution branches for up to twelve AdvancedMCs, up to two MCHs, up to two Carrier FRU Information Devices and up to two Cooling Units
- provides an interface to the Carrier Manager to permit monitoring of the Power Module status and operation of the distribution control elements internal to the Power Module

¶ 4 The four most common sources of AC and DC energy are discussed in some detail in this chapter: –48 V DC, –60 V DC, +24 V DC, and Universal AC in the range of 100–240 V AC. While other sources are possible, they are not currently covered by this specification.

¶ 5 The Power Subsystem and the Carrier Manager communicate via IPMI Links. This allows a Carrier Manager to monitor and control the Power Subsystem.

¶ 6 It is expected that many MicroTCA applications will require redundancy in the Power Subsystem, while other applications will not. The intent of this specification is not to require redundancy, but to facilitate implementation when required.

Property of CERN - For Internal Use Only – External Distribution Prohibited

¶ 7 Because MicroTCA is applicable to a broad range of applications and power levels, it is not the intent of this section to cover all possible implementations and partitioning. Instead, it concentrates on the functionality of the various elements and required interfaces.

¶ 8 Detailed discussion of one recommended Power Module implementation is included. This covers the case where an “all-in-one” Power Module is intended for inclusion within the same Subrack as AdvancedMCs and MCH Modules. In addition, up to four of these Modules can be included to implement 3+1 redundancy, for example.

4.2 Loads on the Power Subsystem

¶ 9 This section describes the loads (payload) supported by a MicroTCA Power Subsystem. These loads include MCHs, AdvancedMCs, and Cooling Units.

¶ 10 It also describes the basic requirements of the Power Subsystem necessary to provide proper operation of the MicroTCA subsystem. The requirements in this section are independent of power architecture decisions (for example, simplex versus redundant power) and/or physical partitioning decisions of the Power Subsystem (for example, all-in-one Power Module versus bulk conversion combined with a power distribution Module).

4.2.1 MicroTCA Carrier Hub (MCH)

¶ 11 A MicroTCA system can be implemented with one or two MCHs. This section describes the basic requirements of the Power Subsystem to ensure proper operation.

4.2.1.1 Description and quantity

Requirements

REQ 4.1 The Power Subsystem **shall** be capable of powering at least one MCH and not more than two MCHs.

REQ 4.2 The Power Subsystem **shall** be capable of powering other devices, including Carrier FRU Information Devices and JSMs, that are connected to the MCH Payload and Management Power outputs so long as the total power required by the MCHs and other devices do not exceed the power budgets in the requirements below.

4.2.1.2 MCH power-up sequence

¶ 12 MCHs are vital resources for managing and controlling the power-up sequence of the payload AdvancedMCs, and if they are present at system power-up, they will be autonomously powered-up by the Power Module.

¶ 13 The autonomous application of MP, PWR and ENABLE# signals to an MCH ceases once the Carrier Manager provides a PM Heartbeat command to the Power Subsystem.

¶ 14 Only primary sources of power will be asserted autonomously, even if the Power Subsystem is designed to support redundant power. The redundant source of power is under the control of the Carrier Manager and, by definition, is therefore not autonomous.

Property of CERN - For Internal Use Only – External Distribution Prohibited

Requirements

REQ 4.3 If multiple Power Modules are present in a Power Subsystem, the autonomous algorithm described in Section 4.4.11.1 **shall** be used to determine which Power Module provides power to the MCHs at system startup.

REQ 4.4 If operating in autonomous mode, and the MCH's PS1# signal has been asserted after debouncing, per Section 4.4.4, the Power Subsystem **shall** autonomously provide the primary source of Management Power to that same MCH within 100ms.

REQ 4.5 If operating in autonomous mode, then not sooner than 25 ms, and not later than 100ms, after enabling Management Power for an MCH, the Power Subsystem **shall** autonomously assert the ENABLE# signal of that same MCH.

REQ 4.6 If operating in autonomous mode, and an MCH's ENABLE# signal is asserted and that same MCH's PWR_ON signal has been asserted after debouncing, per Section 4.4.6, then not sooner than 25 ms, and not later than 100ms, after these conditions being true, the Power Subsystem **shall** autonomously provide Payload Power to that same MCH.

REQ 4.7 A deassertion of the PWR_ON signal subsequent to a PWR Good indication **shall not** cause an MCH to lose Payload Power.

REQ 4.8 If the Power Subsystem supports redundant power for an MCH, then at a later time under it's own control, the Carrier Manager **shall** assign one, and only one, Power Channel to be the source of redundant MP, PWR and ENABLE# for that MCH.

REQ 4.9 In modular systems, redundant sources of MP, PWR and ENABLE# for a MCH **shall not** be applied within 25 ms of the application of the respective primary source. This allows stabilization of voltage levels and permits the designated redundant module to use current flow as a check on whether or not it is still available as a redundant source in the event of a fault.

4.2.1.3 Input voltage

¶ 15 A MicroTCA Power Subsystem must support MCHs in a manner similar to that specified for AdvancedMCs by PICMG AMC.0 R1.0. However, MicroTCA must also support additional functionality that is not required of ATCA Carriers (redundancy, for example). This may result in a wider range of operating voltages on the power-source side of the MCH Connector.

Requirements

REQ 4.10 The Power Subsystem **shall** support MCHs designed to operate with Payload Power in the range of 10 to 14 V (see PICMG AMC.0 R1.0, REQ 4.5).

REQ 4.11 The Power Subsystem **shall** support MCHs designed to operate with Management Power in the range of 3.3 V ±10% (see PICMG AMC.0 R1.0, REQ 4.9).

4.2.1.4 Input current

¶ 16 The connectors specified for use with MCHs in a MicroTCA system impose maximum limits on the allowable steady-state and transient currents associated with an MCH. Protection for these limits is specified in Section 4.2.3.5.

¶ 17 A minimum limit is recommended in this section which will facilitate 80W MCHs with an input voltage as low as 10.6V, which is the lowest voltage allowed in the redundant architecture supported by the Power Modules described in Section 4.6. It is anticipated that other

Property of CERN - For Internal Use Only – External Distribution Prohibited

power architecture variations applicable to MicroTCA will have a minimum voltage at least as high as this level. If lower voltage levels are required, but not lower than the 10 V specified in the AMC.0 R1.0 specification, current limit levels might need to be adjusted to support 80 W. This in turn will require the implementation of tight current limiting tolerances.

Requirements

REQ 4.12 Unless programmed to lower levels, the Power Subsystem **shall not** limit continuous current draw on an MCH's Payload Power Channel to less than 7.6 A.

REQ 4.13 The Power Subsystem **shall not** limit continuous current draw on an MCH's Management Power Channel to less than 150 mA.

4.2.1.5 Protection

¶ 18 The Power Subsystem is expected to prevent damage to the Backplane and Backplane Connectors in the event of an MCH failure that causes current levels to exceed specified limits.

¶ 19 The current levels supported by a MicroTCA Power Subsystem are summarized in Figure 4-1 and Figure 4-2. The constraints are looser for non-redundant Power Subsystems, as only one power source can feed a short-circuit, or similar, fault. In redundant Power Subsystems, two sources can provide power to a load, and hence the limits are tighter.

¶ 20 The region labeled "must support" represents allowed current draw by a load under normal operation (including transferring power from primary to redundant source).

¶ 21 The region labeled "never permitted" represents a region which could result in permanent damage to system components, including the Backplane or Connectors.

¶ 22 The regions labeled "permitted" or "permitted only in non-redundant Power Subsystems" are regions that can be utilized to account for circuit tolerances in current limit circuits or other special needs.

¶ 23 It should also be noted that a minimum transfer of energy is required in the regions labeled "permitted" or "permitted only in non-redundant Power Subsystems" in order to guarantee that input capacitors on the loads are fully charged and the load voltages stabilize. This facilitates predictable timing characteristics for implementing control and sequencing of both simplex and redundant Power Subsystems.

Property of CERN - For Internal Use Only – External Distribution Prohibited

Figure 4-1 Current limit levels for each source of Payload Power to a Load Module

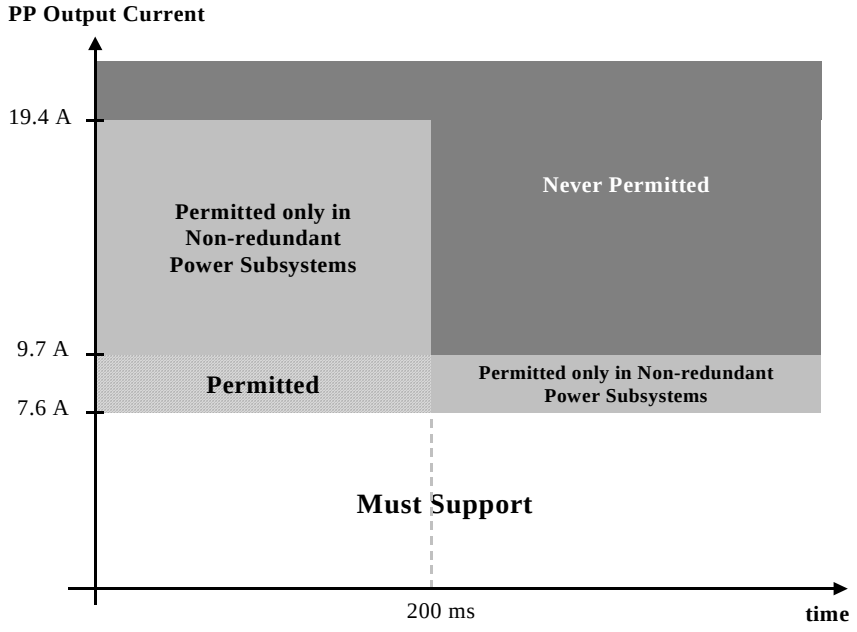

Figure 4-2 Current limit levels for each source of Management Power to a Load Module

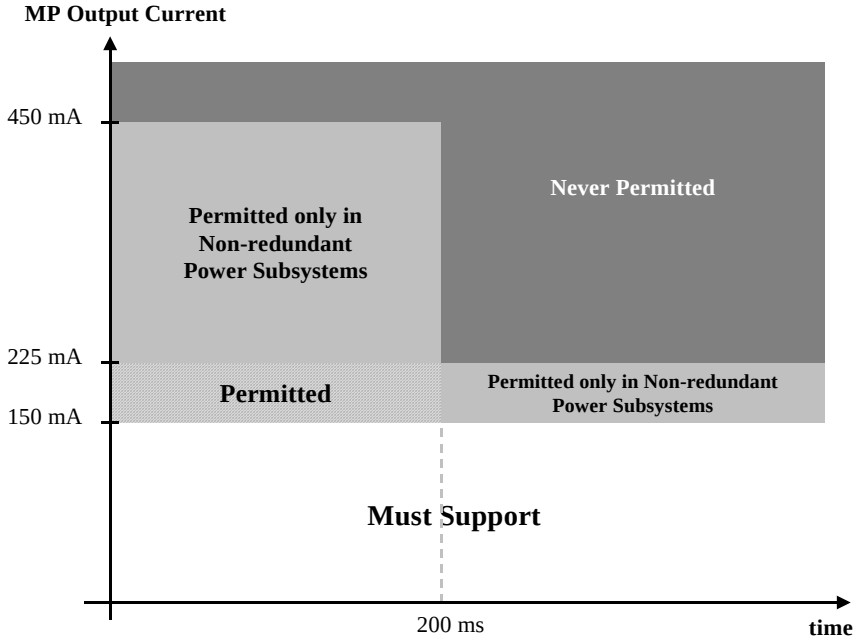

¶ 24 The Power Subsystem is also expected to prevent damage to the Backplane Connector in the event of a surprise extraction of an MCH and ensure that re-inserted Modules power-up in a proper manner.

Property of CERN - For Internal Use Only – External Distribution Prohibited

Requirements

REQ 4.14 The Power Subsystem **shall** limit steady state current draw on an MCH's Payload Power Channel to not greater than 9.7 A.

REQ 4.15 The Power Subsystem, considering all redundant power sources, **may** permit current levels on an MCH's Payload Power Channel of up to 19.4 A for a period of less than 200 ms, with a duty cycle not to exceed 1% in case of recurring events.

REQ 4.16 The current limit circuitry on a Payload Power Channel **shall not** prevent charging a 1600 µF capacitor to within an MCH's Payload Power regulation limits within a time period of 25 ms.

REQ 4.17 The Power Subsystem **shall** limit steady-state current draw on an MCH's Management Power Channel to not greater than 225 mA.

REQ 4.18 The current limit circuitry on a Management Power Channel **shall not** prevent charging a 150 µF capacitor to within an MCH's Management Power regulation limits within a time period of 25 ms.

REQ 4.19 The Power Subsystem, considering all redundant power sources, **may** permit current levels on an MCH's Management Power Channel of up to 450 mA for a period of less than 200 ms, with a duty cycle not to exceed 1% in case of recurring events.

REQ 4.20 The Power Subsystem **shall** disable Management Power and Payload Power to an MCH within 100 µs after the AdvancedMC's PS1# changes state to unasserted.

REQ 4.21 The Power Subsystem **shall** deassert the ENABLE# signal of an MCH Slot within 100 µs after the MCH's PS1# signal changes state to unasserted.

REQ 4.22 The Power Subsystem **shall not** allow the application of Payload Power to any MCH unless Management Power is already applied.

REQ 4.23 If any of the current limits established in this section for Management Power are exceeded, the Power Subsystem **shall** remove both Management Power and Payload Power and deassert the ENABLE# of that same MCH.

REQ 4.24 If the Carrier Manager commands the Power Subsystem to remove Management Power from an MCH, the Power Subsystem **shall** remove both Management Power and Payload Power and deassert the ENABLE# of that same MCH.

4.2.1.6 Control and monitoring

¶ 25 This section describes the basic functionality of the Power Subsystem. Details of any implementation requiring communication between the Power Subsystem and the Carrier Manager are covered in Section 3.

Requirements

REQ 4.25 The Power Subsystem **shall** apply/remove Payload Power to/from an MCH in response to the corresponding "Power Channel Control" command from the Carrier Manager.

REQ 4.26 The Power Subsystem **shall** provide a stable source of Payload Power to an MCH within 25 ms after sending a "Command Completed Normally" response to the corresponding "Power Channel Control" command.

REQ 4.27 The Power Subsystem **shall** apply/remove Management Power to/from an MCH in response to the corresponding "Power Channel Control" command from the Carrier Manager.

Property of CERN - For Internal Use Only – External Distribution Prohibited

REQ 4.28 The Power Subsystem **shall** assert/deassert an MCH's ENABLE# signal in response to the corresponding command from a Carrier Manager.

REQ 4.29 The Power Subsystem **should** monitor the health each MCH Power Channel and make this information available to the Carrier Manager via the "Get Power Channel Status" command and the "Power Channel Notification Event" message, as described in Section 3.

4.2.2 Cooling Units

4.2.2.1 Description and quantity

Requirement

REQ 4.30 The Power Subsystem **may** be designed to provide power for up to two Cooling Units.

4.2.2.2 Cooling Unit power-up sequence

¶ 26 CUs are vital resources for cooling the shelf, and if the Power Subsystem is designed to power them, they will be autonomously powered-up by the Power Module at system power-up.

¶ 27 The autonomous application of MP, PWR and ENABLE# signals to a CU ceases once the Carrier Manager provides a PM Heartbeat command to the Power Subsystem.

¶ 28 Only primary sources of power will be asserted autonomously, even if the Power Subsystem is designed to support redundant power. The redundant source of power is under the control of the Carrier Manager and, by definition, is therefore not autonomous.

Requirements

REQ 4.31 If multiple Power Modules are present in a Power Subsystem, and if the Power Subsystem is designed to provide power to CUs, the autonomous algorithm described in Section 4.4.11.1 **shall** be used to determine which Power Module provides power to the CUs at system startup.

REQ 4.32 If operating in autonomous mode, and if the Power Subsystem is designed to provide power to CUs, and the CU's PS1# signal has been asserted after debouncing, per Section 4.4.4, the Power Subsystem **shall** autonomously provide the primary source of Management Power to that same CU within 100ms.

REQ 4.33 If operating in autonomous mode, then not sooner than 25 ms, and not later than 100ms, after enabling Management Power for a CU, the Power Subsystem **shall** autonomously assert the ENABLE# signal of that same CU.

REQ 4.34 If operating in autonomous mode, then not sooner than 25 ms, and not later than 100ms, after asserting the ENABLE# signal for a CU, the Power Subsystem **shall** autonomously provide Payload Power to that same CU.

REQ 4.35 If the Power Subsystem supports redundant power for a CU, then at a later time under it's own control, the Carrier Manager **shall** assign one, and only one, Power Channel to be the source of redundant MP, PWR and ENABLE# for that CU.

REQ 4.36 In modular systems, redundant sources of MP, PWR and ENABLE# for a CU **shall not** be applied within 25 ms of the application of the respective primary source. This allows stabilization of voltage levels and permits the designated redundant module to use

Property of CERN - For Internal Use Only – External Distribution Prohibited

current flow as a check on whether or not it is still available as a redundant source in the event of a fault.

4.2.2.3 Input voltage

¶ 29 If designed to support Cooling Units, the MicroTCA Power Subsystem supports them in a manner similar to that specified for AdvancedMCs by PICMG AMC.0 R1.0. However, MicroTCA must also support additional functionality that is not required of ATCA Carriers (redundancy, for example). This may result in a wider range of operating voltages on the power-source side of the Connector.

Requirements

REQ 4.37 If designed to support Cooling Units, the Power Subsystem **shall** support Cooling Units designed to operate with Payload Power in the range of 10 to 14 V (see PICMG AMC.0 R1.0, REQ 4.5).

REQ 4.38 If designed to support Cooling Units, the Power Subsystem **shall** support Cooling Units designed to operate with Management Power in the range of 3.3 V ±10% (see PICMG AMC.0 R1.0, REQ 4.9).

4.2.2.4 Input current

¶ 30 The implementation of Cooling Units is considered application and implementation specific. The connectors used to provide Payload Power to Cooling Units are not pre-defined and therefore limitations on the current levels are not defined in this section.

¶ 31 One specific implementation is addressed in Section 4.6.2 with appropriate current levels and limits defined therein for Payload Power.

Requirement

REQ 4.39 If designed to support Cooling Units, the Power Subsystem **shall not** limit continuous current draw on a CU's Management Power Channel to less than 150 mA.

4.2.2.5 Protection

¶ 32 The Power Subsystem is expected to prevent damage to the Backplane and Backplane Connectors in the event of a Cooling Unit failure that causes current levels to exceed specified limits.

¶ 33 The motivation behind and the functionality of the current limits relevant to CUs are described by Figure 4-1, Figure 4-2, and the accompanying text.

¶ 34 The Power Subsystem is expected to prevent damage to the Backplane Connector in the event of a surprise extraction of a Cooling Unit.

Requirements

REQ 4.40 The Power Subsystem **shall** implement steady-state and transient current limiting on a CU's Payload Power Channel consistent with the capacity of the power distribution path to that same CU, including but not limited to connectors and backplane routing.

Property of CERN - For Internal Use Only – External Distribution Prohibited

REQ 4.41 The Power Subsystem transient current limits on a CU's Payload Power Channel **should** be consistent with the startup and other transient requirements of that same Cooling Unit.

REQ 4.42 The Power Subsystem **shall** limit steady state current draw on a CU's Management Power Channel to not greater than 225 mA.

REQ 4.43 The current limit circuitry on a Management Power Channel **shall not** prevent charging a 150 µF capacitor to within CU's Management Power regulation limits within a time period of 25 ms.

REQ 4.44 The Power Subsystem, considering all redundant power sources, **may** permit current levels on a CU's Management Power Channel of up to 450 mA for a period of less than 200 ms, with a duty cycle not to exceed 1% in case of recurring events.

REQ 4.45 The Power Subsystem **shall** disable Management Power and Payload Power to a Cooling Unit within 100 µs after the CU's PS1# signal changes state to unasserted.

REQ 4.46 The Power Subsystem **shall** deassert the ENABLE# signal of a CU Slot within 100 µs after the CU's PS1# signal changes state to unasserted.

REQ 4.47 The Power Subsystem **shall not** allow the application of Payload Power to any CU unless Management Power is already applied.

REQ 4.48 If any of the current limits established in this section for Management Power are exceeded, the Power Subsystem **shall** remove both Management Power and Payload Power and deassert the ENABLE# of that same CU.

REQ 4.49 If the Carrier Manager commands the Power Subsystem to remove Management Power from a CU, the Power Subsystem **shall** remove both Management Power and Payload Power and deassert the ENABLE# of that same CU.

4.2.2.6 Power filtering

¶ 35 Without filtering, a Cooling Unit may inject low frequency interference back into the Power Subsystem through the Payload Power Channels.

¶ 36 In many implementations of the Power Subsystem this could introduce an unacceptable size or cost burden on a Power Module. Therefore, additional filtering is suggested internal to the Cooling Units.

¶ 37 In some systems, the requirements below may be insufficient and even lower levels may be necessary to prevent system interference and the onus remains on the designer of the Cooling Units due to space constraints in the Power Subsystem.

Requirements

REQ 4.50 If designed to support Cooling Units, the Power Subsystem **should** be designed to be tolerant of a 100 mV, peak-to-peak ripple, induced by a Cooling Unit. The onus is on the designer of the Cooling Units to limit reflected ripple current.

REQ 4.51 A Cooling Units **should not** inject more than 0.8 A peak-to-peak current ripple back on to the Power Subsystem.

Property of CERN - For Internal Use Only – External Distribution Prohibited

4.2.2.7 Control and monitoring

¶ 38 This section describes the basic functionality of the Power Subsystem. Details of any implementation requiring communication between the Power Subsystem and the Carrier Manager are covered in Section 3.

Requirements

REQ 4.52 If designed to support Cooling Units, the Power Subsystem **shall** apply/remove Payload Power to/from a CU in response to the corresponding "Power Channel Control" command from the Carrier Manager.

REQ 4.53 If designed to support Cooling Units, the Power Subsystem **shall** provide a stable source of Payload Power to a CU within 25 ms after sending a "Command Completed Normally" response to the corresponding "Power Channel Control" command.

REQ 4.54 If designed to support Cooling Units, the Power Subsystem **shall** apply/remove Management Power to/from a CU in response to the corresponding "Power Channel Control" command from the Carrier Manager.

REQ 4.55 If designed to support Cooling Units, the Power Subsystem **shall** assert/deassert a CU's ENABLE# signal in response to the corresponding command from a Carrier Manager.

REQ 4.56 If designed to support Cooling Units, the Power Subsystem **should** monitor the health each CU Power Channel and make this information available to the Carrier Manager via the "Get Power Channel Status" command and the "Power Channel Notification Event" message, as described in Section 3.

4.2.3 Advanced Mezzanine Cards

4.2.3.1 Description and quantity

Requirement

REQ 4.57 The Power Subsystem **shall** be capable of powering at least one AdvancedMC and not more than twelve AdvancedMCs.

4.2.3.2 AdvancedMC power-up sequence

¶ 39 AdvancedMCs will not receive Management Power nor have their MMCs enabled except under the control of the Carrier Manager. Similarly, Payload Power is provided under the control of the Carrier Manager and only after Management Power is enabled.

Requirements

REQ 4.58 The Carrier Manager **shall** assign the power channel for any AdvancedMC that is present.

REQ 4.59 The Power Subsystem **shall not** provide Management Power to an AdvancedMC unless the PS1# signal of that same Advanced MC is asserted after debouncing per Section 4.4.4.

REQ 4.60 The Carrier Manager **shall** command MP to an AdvancedMC by sending appropriate commands to the PM as described in Section 3.

Property of CERN - For Internal Use Only – External Distribution Prohibited

REQ 4.61 The Carrier Manager **shall** assert ENABLE# for an AdvancedMC by sending appropriate commands to the PM as described in Section 3.

REQ 4.62 The Carrier Manager **shall** command PWR to an AdvancedMC by sending appropriate commands to the PM as described in Section 3 and only after Management Power is applied and ENABLE# asserted.

REQ 4.63 If the Power Subsystem supports redundant power for an AMC, then at a later time under it's own control, the Carrier Manager **shall** assign one, and only one, Power Channel to be the source of redundant MP, PWR and ENABLE# for that AMC.

REQ 4.64 In modular systems, redundant sources of MP, PWR and ENABLE# for an AMC **shall not** be applied within 25 ms of the application of the respective primary source. This allows stabilization of voltage levels and permits the designated redundant module to use current flow as a check on whether or not it is still available as a redundant source in the event of a fault.

4.2.3.3 Input voltage

¶ 40 A MicroTCA Power Subsystem must support AdvancedMCs specified by PICMG AMC.0 R1.0. However, MicroTCA must also support additional functionality that is not required of ATCA Carriers (redundancy, for example). This may result in a wider range of operating voltages on the power-source side of the Connector.

Requirements

REQ 4.65 The Power Subsystem **shall** support AdvancedMCs designed to operate with Payload Power in the range of 10 to 14 V (see PICMG AMC.0 R1.0, REQ 4.5).

REQ 4.66 The Power Subsystem **shall** support AdvancedMCs designed to operate with Management Power in the range of 3.3 V ±10% (see PICMG AMC.0 R1.0, REQ 4.9).

4.2.3.4 Input current

¶ 41 The connectors specified for use with AdvancedMCs in a MicroTCA system impose maximum limits on the allowable steady-state and transient currents associated with an AMC. Protection for these limits is specified in Section 4.2.3.5.

¶ 42 A minimum limit is recommended in this section which will facilitate 80 W AdvancedMCs with an input voltage as low as 10.6 V, which is the lowest voltage allowed in the redundant architecture supported by the Power Modules described in Section 4.6. It is anticipated that other power architecture variations applicable to MicroTCA will have a minimum voltage at least as high as this level. If lower voltage levels are required, but not lower than the 10 V specified in the AMC.0 R1.0 specification, current limit levels might need to be adjusted to support 80W. This in turn will require the implementation of tight current limiting tolerances.

Requirements

REQ 4.67 Unless programmed to lower levels, the Power Subsystem **shall not** limit continuous current draw on an AdvancedMC's Payload Power Channel to less than 7.6 A.

REQ 4.68 The Power Subsystem **shall not** limit continuous current draw on an AdvancedMC's Management Power Channel to less than 150 mA.

Property of CERN - For Internal Use Only – External Distribution Prohibited

4.2.3.5 Protection

¶ 43 The Power Subsystem is expected to prevent damage to the Backplane and Backplane Connectors in the event of an AdvancedMC failure that causes current levels to exceed specified limits.

¶ 44 The motivation behind and the functionality of the current limits relevant to AdvancedMCs are described by Figure 4-1, Figure 4-2, and the accompanying text.

¶ 45 The Power Subsystem is expected to prevent damage to the Backplane Connector in the event of a surprise extraction of an AdvancedMC.

Requirements

REQ 4.69 The Power Subsystem **shall** limit steady-state current draw on an AdvancedMC's Payload Power Channel to not greater than 9.7 A.

REQ 4.70 The Power Subsystem, considering all redundant power sources, **may** permit current levels on an AdvancedMC's Payload Power Channel of up to 19.4 A for a period of less than 200 ms, with a duty cycle not to exceed 1% in case of recurring events.

REQ 4.71 The current limit circuitry on a Payload Power Channel **shall not** prevent charging a 1600 µF capacitor to within AdvancedMC's Payload Power regulation limits within a time period of 25 ms.

REQ 4.72 The Power Subsystem **shall** limit steady-state current draw on an AdvancedMC's Management Power Channel to not greater than 225 mA.

REQ 4.73 The current limit circuitry on a Management Power Channel **shall not** prevent charging a 150 µF capacitor to within AdvancedMC's Management Power regulation limits within a time period of 25 ms.

REQ 4.74 The Power Subsystem, considering all redundant power sources, **may** permit current levels on an AdvancedMC's Management Power Channel of up to 450 mA for a period of less than 200 ms, with a duty cycle not to exceed 1% in case of recurring events.

REQ 4.75 The Power Subsystem **shall** disable Management Power and Payload Power to an AdvancedMC within 100 µs after AdvancedMC PS1# changes state to unasserted.

REQ 4.76 The Power Subsystem **shall** deassert the ENABLE# signal of an AdvancedMC Slot within 100 µs after the AdvancedMC's PS1# signal changes state to unasserted.

REQ 4.77 The Power Subsystem **shall not** allow the application of Payload Power to any AMC unless Management Power is already applied.

REQ 4.78 If any of the current limits established in this section for Management Power are exceeded, the Power Subsystem **shall** remove both Management Power and Payload Power and deassert the ENABLE# of that same AMC.

REQ 4.79 If the Carrier Manager commands the Power Subsystem to remove Management Power from an AdvancedMC, the Power Subsystem **shall** remove both Management Power and Payload Power and deassert the ENABLE# of that same AMC.

4.2.3.6 Control and monitoring

¶ 46 This section describes the basic functionality of the Power Subsystem. Details of any implementation requiring communication between the Power Subsystem and the Carrier Manager are covered in Section 3.

Property of CERN - For Internal Use Only – External Distribution Prohibited

Requirements

REQ 4.80 The Power Subsystem **shall** apply/remove Payload Power to/from an AMC in response to the corresponding “Power Channel Control” command from the Carrier Manager.

REQ 4.81 The Power Subsystem **shall** provide a stable source of Payload Power to an AMC within 25 ms after sending a “Command Completed Normally” response to the corresponding “Power Channel Control” command.

REQ 4.82 The Power Subsystem **shall** apply/remove Management Power to/from an AMC in response to the corresponding “Power Channel Control” command from the Carrier Manager.

REQ 4.83 The Power Subsystem **shall** assert/deassert an AMC’s ENABLE# signal in response to the corresponding command from a Carrier Manager.

REQ 4.84 The Power Subsystem **should** monitor the health each AMC Power Channel and make this information available to the Carrier Manager via the “Get Power Channel Status” command and the “Power Channel Notification Event” message, as described in Section 3.

4.3 Power architecture

¶ 47 This section summarizes the necessary and optional building blocks that make up a MicroTCA Power Subsystem. It also describes some of the methods by which these blocks can be configured.

4.3.1 Basic functionality

¶ 48 The basic functionality of a DC-powered subsystem is illustrated in Figure 4-3 below:

Property of CERN - For Internal Use Only – External Distribution Prohibited

Figure 4-3 Power Subsystem functionality

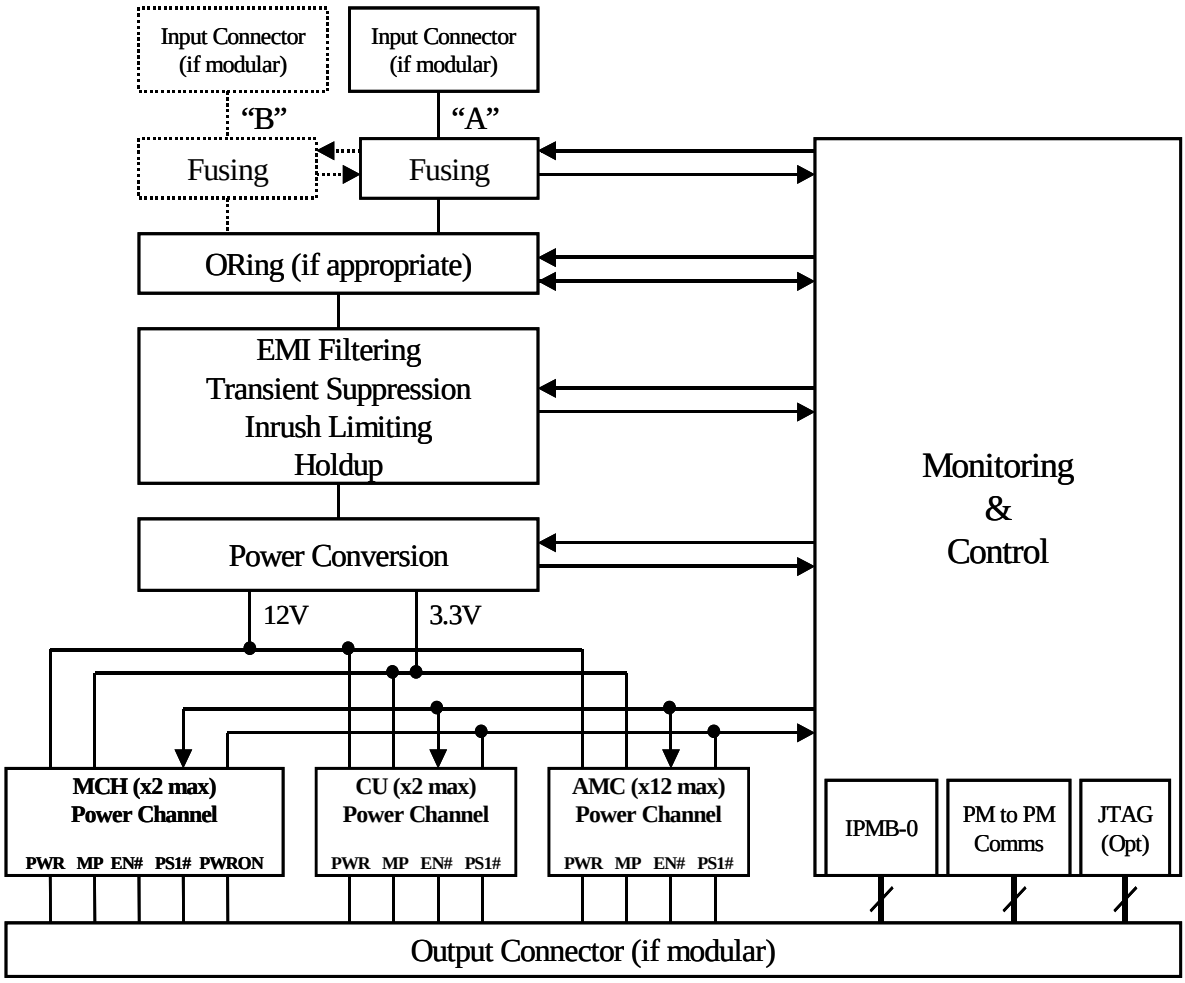

¶ 49 The Power Subsystem takes energy from one or more input sources and then performs the following functions:

- conditions the power to protect against disturbances associated with the sources of energy
- combines the feeds, if necessary and appropriate
- converts and regulates the power to voltage levels required by the loads in a MicroTCA system
- feeds the power radially to the loads so that each load can be managed independently of the others

¶ 50 This is all performed under the supervision of a control and monitoring subsystem.

¶ 51 The functionality of an AC-powered subsystem will be similar in many ways. However, one major difference is in the handling of multiple AC feeds. Most systems will probably constrain a Power Module to operation from a single AC feed, so that multiple AC feeds will

Property of CERN - For Internal Use Only – External Distribution Prohibited

require multiple power modules. It is possible to implement multiple feeds on a power module. This requires either relay switching, which is often unacceptable, or the introduction of parallel power conversion circuitry prior to the stage that provides electrical isolation.

4.3.2 Partitioning of the Power Subsystem

¶ 52 There are many methods by which such a system may be implemented, partitioned, and/or modularized.

¶ 53 Figure 4-3 could represent a Module that comprises the entire Power Subsystem, or it could be one of up to four such Modules used in a redundant configuration. In the interests of encouraging a level of commonality, one Module style is described in detail in Section 4.7.

¶ 54 The Module described in Section 4.7 implements all elements of Figure 4-3. It receives its energy from up to two DC feeds and provides power independently to up to twelve AdvancedMCs, up to two MCHs, and up to two Cooling Units. This Module can be used in applications where payload and Management Power are provided with N+1 redundancy, where N=1, 2, or 3. In addition, this Module can be used to provide non-redundant payload and Management Power (i.e. the special case of N+0).

¶ 55 To facilitate some of these implementations, a power Backplane Connector is also specified in detail in Section 7, and its pin list and sequencing are referenced in this section. It is expected that many applications in which the power supply is modularized will utilize this Connector. However, other implementations may chose to use a different Connector (e.g., if the Power Module is implemented in a Half-Height form factor) or choose not to use a Connector (e.g., in non-modular implementations).

4.3.3 Power sources

¶ 56 MicroTCA systems may be powered from a variety of sources. Development of the specification and the architectures herein, have given consideration to Power Modules with the following sources of power (all voltages levels listed are nominal):

- –48 V battery plants
- –60 V battery plants
- +24 V battery plants
- 100 V AC mains power
- 120 V AC mains power
- 230 V AC mains power

¶ 57 To support these differing power sources and to support modular implementations, a number of different Power Module types are anticipated:

- Negative DC voltage Modules—this type accepts either –48 VDC or –60 VDC feeds to power the system
- Positive DC voltage Modules—this type accepts +24 VDC to power the system
- AC-powered Modules—this type of Module accepts 100 V, 120 V or 230 V AC mains to power the system

Property of CERN - For Internal Use Only – External Distribution Prohibited

¶ 58 And within these Module types, subtypes may emerge, depending on the level of optimization required. For example, further optimization of the negative DC voltage Module may result from limiting its input to only –48 VDC battery plants.

¶ 59 A comprehensive treatment of the considerations associated with these power sources is provided in Section 4.7, herein.

4.3.4 Power Subsystem redundancy

¶ 60 To improve system availability in the event of a failure, redundancy may be implemented within the Power Subsystem.

¶ 61 Redundancy at the outputs of the Power Subsystem, i.e. Payload Power and Management Power, and redundancy of feeds are discussed.

¶ 62 This subsection introduces some of the issues by way of example.

4.3.4.1 Redundancy and input feeds

¶ 63 In systems with multiple-input power feeds, redundancy may also be implemented by appropriate routing of the available feeds to the appropriate Power Modules.

¶ 64 In a system with 1+1 redundant Power Modules, the simplest scheme is to route Feed A to one Power Module and Feed B to the other Power Module.

¶ 65 In some applications, it may also be desirable to provide both feeds to both Power Modules, although this is more complex and reliability and availability improvements may be marginal. Refer to Figure 4-3 for an illustration of the A and B feeds.

¶ 66 In other scenarios, multiple input feeds must be routed to each Power Module in order to support redundancy of the Power Modules. For example, consider a system that implements 3+1 redundancy at the outputs of the Power Module and has redundant “A” and “B” feeds. Now each Module must be capable of receiving two feeds. Otherwise, the loss of a feed could result in only two Power Modules attempting to support a load that requires three Power Modules.

4.3.4.2 Redundancy of Payload and Management Power

¶ 67 Examples of, and considerations for, both redundant and non-redundant systems are discussed in this section.

4.3.4.2.1 Example: Non-redundant Power Subsystem

¶ 68 A simple MicroTCA Power Subsystem might include a single Power Module which provides power to one or more AdvancedMCs, one or two MCHs, and up to two Cooling Units.

¶ 69 Figure 4-4 below illustrates the interdependence of a basic non-redundant Power Subsystem including one Power Module, a Backplane, AdvancedMCs, MCHs, and Cooling Units.

Property of CERN - For Internal Use Only – External Distribution Prohibited

Figure 4-4 Non-redundant Power Subsystem example

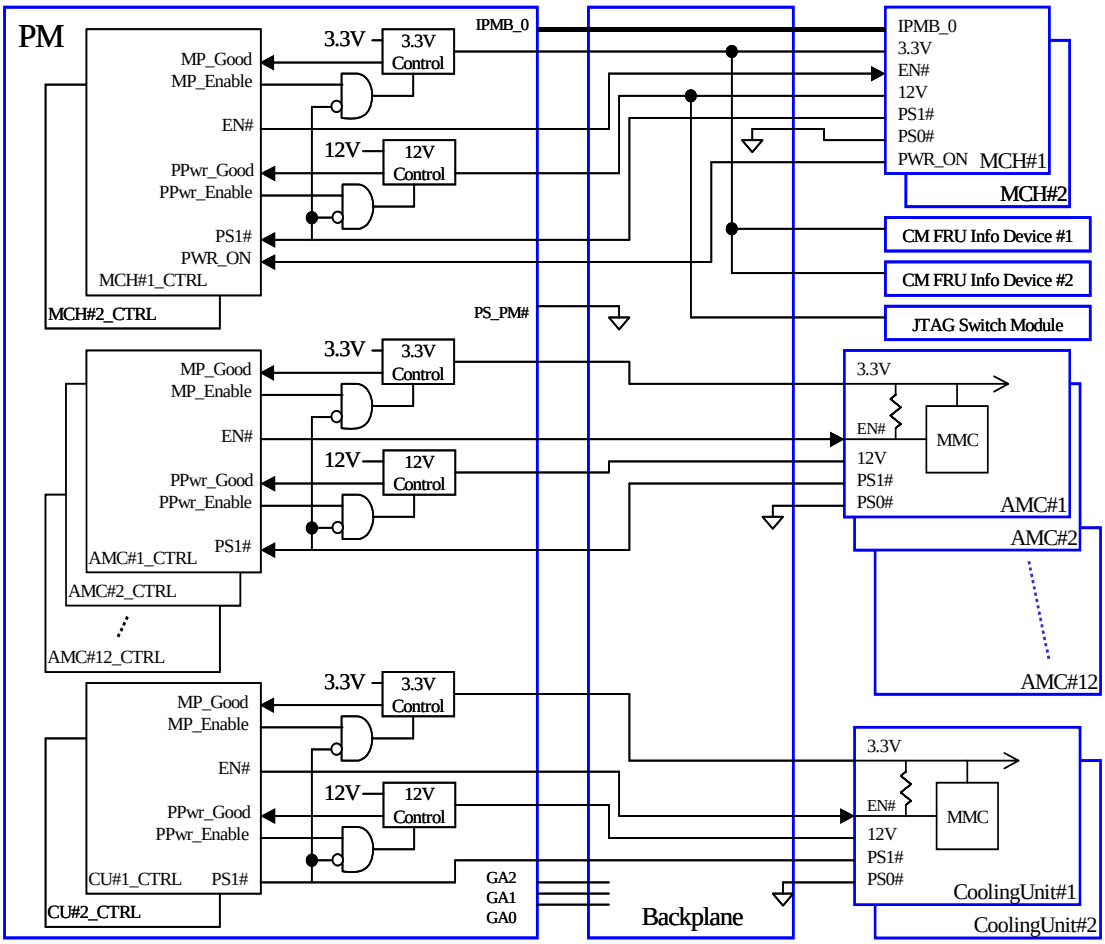

4.3.4.2.2 Example: 1+1 redundant Power Subsystem

¶ 70 An example of a more complex MicroTCA Power Subsystem is illustrated in Figure 4-5. In addition to one or more AdvancedMCs, the system now includes more than one Power Module.

Property of CERN - For Internal Use Only – External Distribution Prohibited

Figure 4-5 Redundant Power Subsystem example

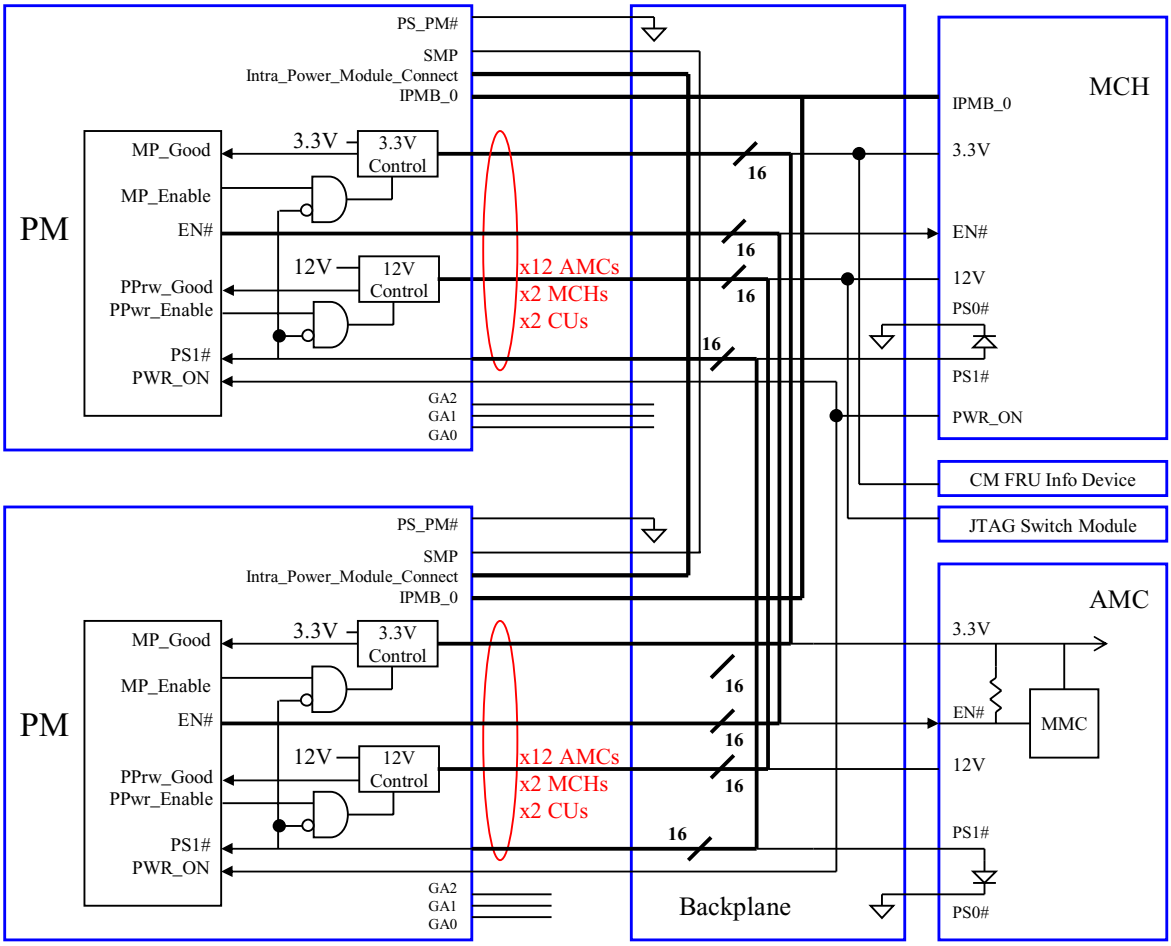

4.3.4.2.3 Considerations for N+1 redundant Power Subsystem

¶ 71 Higher power or more complex systems might benefit from the implementation of N+1 redundancy at the outputs of the Power Module, where N≥1.

¶ 72 For example in 1+1 implementations, two Power Modules are implemented, with each capable of processing the rated system power. While acceptable at lower power levels, this may be an unnecessary burden in higher power systems. In these systems, some savings in cost and size might be achieved by using N+1 power supplies, where N Power Modules are capable of processing the rated system power, and the additional ("+1") Power Module provides redundant capacity in the event that one of the N Power Modules fails.

4.3.4.3 Implementation of Payload Power redundancy

¶ 73 The recommended method for implementation of redundancy for the Payload Power of any permissible load is described in Figure 4-6.

Property of CERN - For Internal Use Only – External Distribution Prohibited

¶ 74 A primary source of Payload Power is controlled by two controlled series switches, probably implemented as MOSFETs. One of the switches, herein referred to as an ORing device, allows current to flow to the load (AdvancedMC, MCH, or Cooling Unit) and prevents current flowing into the power supply. The other switch, herein referred to as the Pass device, can be controlled to prevent or limit current flowing to the aforementioned loads.

¶ 75 Similarly, a redundant source of Payload Power is controlled by two series switches.

Figure 4-6 Payload Power redundancy

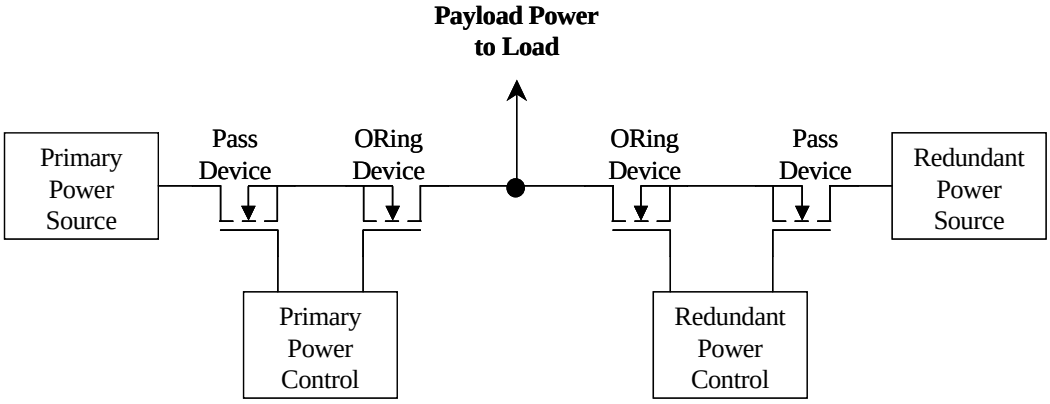

¶ 76 Operation under normal conditions, Payload Power redundancy is described as follows:

- The primary and redundant sources of Payload Power, prior to the switches, are at essentially the same voltage.
- Both the ORing device and the Pass Device in the primary path are turned “ON”.
- Only the Pass Device in the redundant path is turned “ON”.
- The ORing FET in the redundant path is controlled “OFF”, and its intrinsic body diode is reverse biased.
- Therefore, the load will be fed through the primary path, and the redundant path is in “standby”.

¶ 77 If the primary Payload Power source fails, the load will be fed from the redundant Payload Power source through the diode provided by the ORing device. If the ORing device on the redundant Channel is implemented with a MOSFET, the MOSFET may also need to be turned on to minimize power dissipation in the device.

¶ 78 Implementation of this redundancy scheme may monitor the overall current draw on the bulk 12V source to check that the role of the redundant PM has not unexpectedly changed to that of a Primary PM. Appropriate design and implementation of voltage offsets and budgets can be used to prevent current draw under normal operation from the 12V bulk source in the redundant PM.

Note: Because ORing devices are used, both primary and redundant sources can source current simultaneously. This means that current under fault conditions can exceed twice the current limit of either Channel.

Property of CERN - For Internal Use Only – External Distribution Prohibited

Requirements

REQ 4.85 The ORing device in the primary Payload Power path **should** be implemented with a MOSFET switch or equivalent.

REQ 4.86 The ORing device in the redundant Payload Power path **should** be implemented with a MOSFET switch or equivalent.

REQ 4.87 The switches in the primary Payload Power path **shall** prevent current flow from the load to the source.

REQ 4.88 The switches in the redundant Payload Power path **shall** prevent current flow from the load to the source.

REQ 4.89 Voltage drops in the primary path **should** be designed such that these drops do not cause current flow from the redundant power source during normal operation.

4.3.4.4 Implementation of Management Power redundancy

¶ 79 The recommended method for implementation of redundancy for the Management Power of any permissible load is described in Figure 4-7.

¶ 80 A primary source of Management Power is controlled by two series switches. One of the switches, herein referred to as an ORing device, allows current to flow to the load (AdvancedMC, MCH, or Fan) and prevents current flowing into the power supply. This may be implemented with a diode. A MOSFET switch is not required. If this is implemented with a diode care must be taken to ensure adequate Voltage margin remains since the forward Voltage drop of a diode can be a significant percentage of the 3.3 V. The other switch, herein referred to as the Pass device, can be controlled to prevent or limit current flowing to the aforementioned loads.

¶ 81 Similarly, a redundant source of Management Power is controlled by two series switches.

Figure 4-7 Management Power redundancy

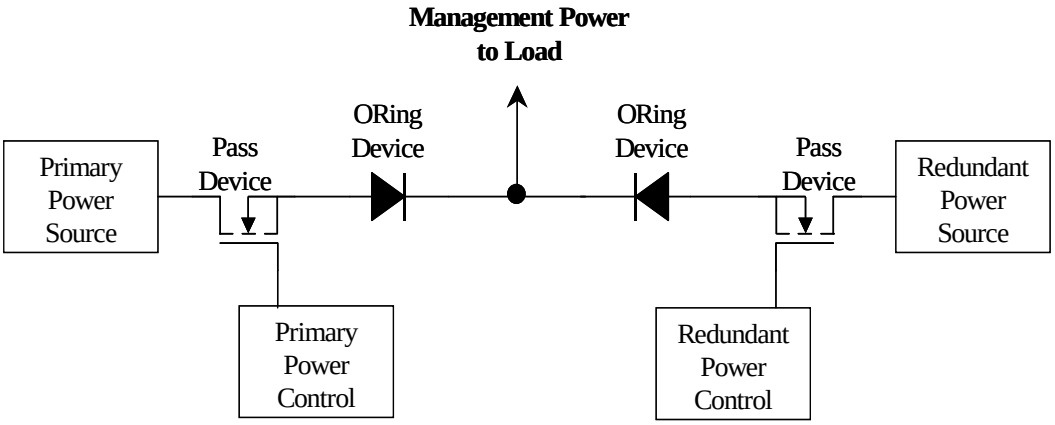

¶ 82 Operation under normal conditions, Management Power redundancy is described as follows:

- The Pass devices in both primary and redundant paths are turned “ON”.
- Loads will be fed through either the primary path or the redundant path, or both, depending on power source setpoints and voltage drops in the power distribution paths.

Property of CERN - For Internal Use Only – External Distribution Prohibited

¶ 83 If the primary Management Power source fails, the ORing device in the primary path will be reverse biased and the load will be fed from the redundant Management Power source through the diode provided by the ORing element.

Note: Because ORing diodes are used, both primary and redundant sources can source current simultaneously. This means that current under fault conditions can be approximately equal to twice the current limit of either Channel.

Requirements

REQ 4.90 The ORing device in the primary Management Power path **should** be implemented with a diode.

REQ 4.91 The ORing device in the redundant Management Power path **should** be implemented with a diode.

REQ 4.92 The switches in the primary Management Power path **shall** prevent current flow from the load to the source.

REQ 4.93 The switches in the redundant Management Power path **shall** prevent current flow from the load to the source.

4.3.5 System Grounding considerations

¶ 84 Equipment earthing (Grounding) and bonding design provides the means for reducing electromagnetic emissions and assisting in electromagnetic immunity and electrostatic protection, while providing a means of safely carrying fault currents due to electrical failures or atmospheric disturbances.

¶ 85 System and building Grounding systems vary according to industry preferences, as well as geographical and regulatory requirements. Such systems may be generally described as Isolated Bonding Networks or Common Bonding Networks. Telecommunications equipment may be deployed into various building Grounding systems. See International Telecommunication Union, ITU-T K.27 “Bonding Configurations and Earthing Inside a Telecommunications Building”.

¶ 86 The power supply return conductor is normally defined as the conductor that is referenced to earth. The power supply return conductor in load equipment (electrical utilization equipment) may have isolated secondary power distributions that are not be referenced to earth, but instead form the common return for multiple power supply sources.

¶ 87 An Isolated DC return (DC-I) system is one that has connections to DC mains or Battery but both the feed and return conductors are isolated from chassis earth and protective earth connections within the product.

¶ 88 A Common DC return (DC-C) system is one that has connections to DC mains or battery and either one of the feeds, or return conductors are bonded to chassis earth and/or protective earth connections within the product.

4.3.5.1 Power-specific Grounding considerations

¶ 89 The requirements in this sub-section are addressed directly by the Power Subsystem or Power Module.

Property of CERN - For Internal Use Only – External Distribution Prohibited

Requirements

REQ 4.94 The Power Subsystem **shall,** as a minimum, comply with the safety requirements of IEC 60950-1.

REQ 4.95 Separate feed and return conductors **should** be provided for each mains power connection (AC, DC, or battery) provided to the equipment.

REQ 4.96 Power input terminals or wiring **shall** be sized consistent with both upstream power source fusing and to accommodate the permitted voltage drop from the power feed source for the maximum specified distance.

REQ 4.97 Equipment powered from the AC mains (and intended for installation into an Isolated Bonding Network) **should** be designed for double/reinforced insulation, defined as Class II according to IEC 60950-1.

REQ 4.98 If other than a double/reinforced insulation (Class II) AC mains power design is used, then the equipment **shall** be designed to provide at least supplementary insulation, as defined by IEC 60950-1, between the AC mains protective earthing conductor and all other conductive chassis or equi-potential earth connections of the equipment.

REQ 4.99 All secondary supplies **should** be separated by at least basic insulation, as defined by IEC 60950-1, when these secondary supplies are derived from TNV-2 circuits.

REQ 4.100 As an alternative to basic insulation defined in the previous requirement, all secondary supplies derived from the power source **may** have the power return conductors bonded to the protective earthing terminal of the equipment in accordance with IEC 60950-1.

REQ 4.101 Internal to the Power Subsystem or Power Module, all secondary supplies **should** be separated by at least basic insulation from the Power Subsystem or Power Module chassis/enclosure.

REQ 4.102 Power Modules **shall** provide a secure means of connecting the Power Module chassis (including faceplate) to the earth-bonded shelf as defined by IEC 60950-1 Clause 3.1.6 or equivalent.

REQ 4.103 Power Module connections to the earth-bonded shelf **shall** either (i) pass the test defined by IEC 60950-1 Clause 2.6.3.4 (40 A, 2 mins, < 2.5 V) or equivalent or (ii) carry at least twice the current rating of the branch circuit

4.3.5.2 System-level Grounding considerations

¶ 90 The requirements in this sub-section are typically addressed at the Shelf or Frame level. They could also be implemented within the Power Subsystem if consistent with cost and other design constraints.

Requirements

REQ 4.104 On Shelf and Frame assemblies, a means **shall** be provided for attaching the building system reference Ground/earth bonding conductor to the equipment chassis. The preferred attachment method is to accommodate a dual-hole pressure wire Connector. The dual-hole pressure wire Connector should be capable of fitting a #6 AWG (4.877 mm/ISO 5 mm preferred) copper wire.

REQ 4.105 On Shelf and Frame assemblies, the earth bonding/Grounding system **shall** be designed to carry at least twice the current rating of the branch circuit that supplies power from the over current protection device to the equipment.

Property of CERN - For Internal Use Only – External Distribution Prohibited

REQ 4.106 On DC/battery power systems a means **should** be provided at the shelf or frame level for connecting a bonding jumper between the equipment chassis reference Ground and the power supply return conductors.

REQ 4.107 The MicroTCA shelf provider **should** provide user and installation instructions that specify the design method and/or jumper installation methods or DC-I or DC-C use.

REQ 4.108 The MicroTCA shelf provider **should** provide a user-configurable means for connecting equipment chassis reference Ground and Logic Ground.

REQ 4.109 All conductive chassis surfaces **should** be electrically interconnected using low-impedance and high-current design methods, as required to ensure that fault currents are drained to the earth system.

REQ 4.110 A low impedance (not to be greater than 1.00×10^{-1} ohm) connection **should** be provided between conductive Face Plates, doors, and covers and the chassis equi-potential reference point.

REQ 4.111 Equipment with shielded interfaces **shall** provide a means of grounding the shield to shelf Ground of the equipment.

REQ 4.112 Equipment with unbalanced/single-ended interfaces intended for installation in Isolated Bonding Networks **shall** provide a means of isolating the signal returns from the shelf Ground in the equipment.

4.3.6 Power distribution and backplane considerations

¶ 91 This section captures specifications necessary to ensure consistency between the design of the payload and management power distribution system and other elements of the MicroTCA Power Subsystem.

¶ 92 For example, the MCHs and CUs receive power autonomously, independent of the Carrier Manager. Therefore, it must be assumed that current limits are at their maximum possible value, unless otherwise guaranteed even during autonomous start-up mode.

¶ 93 Another example is the user-configurable link that optionally ties that Logic Ground to Shelf Ground. This can be subject to short circuit currents depending on

Requirements

REQ 4.113 In modular systems, and unless current limits can be guaranteed to be lower than those specified in Section 4.2.1.5 and Section 4.2.2.5, the payload power distribution paths for all MCHs and CUs **shall** support current consistent with the current limits specified in Section 4.2.1.5 and Section 4.2.2.5.

REQ 4.114 In modular systems, and unless current limits are programmed lower than those specified in Section 4.2.3.5, the payload power distribution paths for all AdvancedMCs **shall** support current consistent with the current limits specified in Section 4.2.3.5.

REQ 4.115 For systems designed to be compliant with GR-1089 R9-14, the user-configurable means connecting equipment chassis referenced Ground and Logic Ground **shall** be capable of carrying the maximum short-circuit current of all relevant embedded DC power sources.

Property of CERN - For Internal Use Only – External Distribution Prohibited

4.4 Control and monitoring of the Power Subsystem

¶ 94 This subsection describes the signaling required to enable communication between the Power Subsystem, system management and up to two MCHs, up to twelve AdvancedMCs, and up to two Cooling Units.

4.4.1 PM-EMMCs

¶ 95 A MicroTCA Power Subsystem will include at least one Enhanced MMC (EMMC) to facilitate communication with the Carrier Manager. Redundant modular implementations will include an EMMC on each Power Module that communicates with the Carrier Manager. Regardless of whether the Power Subsystem is implemented in a modular or non-modular form, each of these EMMCs will be known as a Power Module EMMC (PM-EMMC).

Requirements

REQ 4.116 A non-modular Power Subsystem **shall** include one EMMC that implements IPMI communication with the Carrier Manager as described in Section 3.

REQ 4.117 A modular Power Subsystem **shall** include one EMMC for each Power Module that implements IPMI communication with the Carrier Manager as described in Section 3.

4.4.2 Geographic Address

¶ 96 Up to three Geographic Address (GA) pins are used to assign addresses within the Power Subsystem to support IPMB-0. Each of the GA pins can be connected to Logic Ground or left unconnected on the Backplane to define the Geographic Address.

¶ 97 Each PM-EMMC will have its own unique address.

Requirements

REQ 4.118 The Power Subsystem **shall** support up to three Geographic Address lines (GA0, GA1, GA2).

REQ 4.119 Geographic address lines, if used, **shall** be able to distinguish between geographic address lines that are connected to Logic Ground or left unconnected.

4.4.3 IPMB-0

¶ 98 The Power Module EMMCs use an Intelligent Platform Management Bus (IPMB) for management communications with the Carrier Manager. The reliability of the IPMB is improved by the addition of a second IPMB, with the two IPMBs referenced as IPMB-A and IPMB-B. The aggregation of the two IPMBs is IPMB-0. The PM-EMMC aggregates the information received on both IPMBs. An EMMC that has a message ready for transmit will use the IPMBs in a round-robin fashion. An EMMC will try to alternate the transmission of messages between IPMB-A and IPMB-B. If an EMMC is unable to transmit on the desired IPMB, then it will try to send the message on the alternate IPMB. By using this approach, an IPMB can become unavailable and then available without the EMMC needing to take specific action. See ATCA section 3.8 Intelligent Platform Management Bus for details.

Property of CERN - For Internal Use Only – External Distribution Prohibited

Requirement

REQ 4.120 The Power Subsystem **shall** support IPMB-0, as specified in ATCA section 3.8.

4.4.4 PS1_[Slot]#

¶ 99 PS1_[Slot]# are the Module Presence signals from up to twelve AdvancedMCs, two MCHs, and two Cooling Units in the carrier. Each is used by the Power Module to detect surprise extraction of the Module and disable Payload Power and Management Power and de-assert ENABLE# to that Module upon deassertion of the PS1_[Slot]# signal.

¶ 100 The status of these signals is available to the Carrier Manager via IPMI “Get Power Channel Status” command and “Power Channel Notification” event message.

Requirements

REQ 4.121 The Power Subsystem **shall** support the PS1_[Slot]# functionality for each load Module supported by the Power Subsystem.

REQ 4.122 The Power Subsystem **shall** pull up each PS1_[Slot]# pin to Management Power with a 10K ohm ±10% or lower value resistor.

REQ 4.123 For the purposes of debouncing a valid assertion of a PS1# signal **shall** require that it has remained in the low state for 100ms or longer.

REQ 4.124 A PS1# signal **shall** indicate deasserted when the PS1# signal is deasserted without debouncing.

4.4.5 EN_[Slot]#

¶ 101 EN_[Slot]# are the signals used to reset the MMCs of up to twelve AdvancedMCs, the MCMCs of up to two MCHs, and the EMMCs of up to two Cooling Units in the Shelf. If a MMC, MCMC or EMMC is to be reset, the Power Module receives a request from a Carrier Manager via IPMI. The Power Subsystem then commands the relevant load(s) via the load’s ENABLE# pin.

¶ 102 The ENABLE# pin is an active low input to the Module, pulled up on the Module to Management Power (MP). This signal is used in the Module to create a management controller RESET(#) signal. This input indicates that the Module is fully inserted and valid states exist on all inputs to the Module. The Module’s management controller is not allowed to read the GA inputs or use the IPMB-L or IPMB-0 while ENABLE# is inactive.

Requirement

REQ 4.125 The Power Subsystem **shall** support the EN_[Slot]# functionality for each load Module supported by the Power Subsystem.

4.4.6 PWRON_[Slot]

¶ 103 The PWRON_[Slot] pins interface with the designated MCH Slots and are used to control whether PWR is applied to that slot by the Power Subsystem during autonomous mode of operation.

Property of CERN - For Internal Use Only – External Distribution Prohibited

¶ 104 If an MCH is plugged into the Slot, PWRON_[Slot] signal must be pulled high to MP on that same load if it is to be powered-up during autonomous operation. The PWR-ON signal might be delayed relative to the application of MP.

¶ 105 If an AdvancedMC is plugged into the Slot, PWRON_[Slot] signal must be pulled to GND by that same load.

Requirements

REQ 4.126 For the purposes of debouncing a valid assertion of a PWRON_[Slot] signal **shall** require that it has remained in the high state for 100ms or longer.

REQ 4.127 Internal to the Power Subsystem, the PWRON_[Slot] pin **shall** be pulled to GND with a 10K ohm ±10% resistor.

REQ 4.128 An asserted PWRON_[Slot] signal **shall** be a necessary condition for providing PWR to an MCH during autonomous mode of operation.

4.4.7 PS_PM#

¶ 106 The PS_PM# pins are last-mate connections that indicate a Power Module is present and/or seated in the MicroTCA system. The Backplane connects PS_PM# to GND.

Requirements

REQ 4.129 Modular implementations **shall** support a last-mate pin, PS_PM#, for each Power Module.

REQ 4.130 The PS_PM# pin **shall** enable power supply operation once connected to LOGIC GND on the Backplane.

REQ 4.131 Payload Power and Management Power **shall not** be applied to loads until the PS_PM# pin mates.

REQ 4.132 Payload Power and Management Power **shall** be disconnected from loads within 100 µs of the PS_PM# pin unmating.

4.4.8 PM-EMMC watchdog timer

¶ 107 A watchdog timer is provided to reset the PM-EMMC in the event that the PM-EMMC is unresponsive. The watchdog could be integrated into the PM-EMMC. This specification does not mandate what the watchdog checks, just that a watchdog be provided to reset an unresponsive PM-EMMC.

Requirements

REQ 4.133 A PM-EMMC **shall** provide a watchdog timer strobed by the PM-EMMC and will reset if it is not strobed.

REQ 4.134 If the watchdog or a command resets a PM-EMMC, the state of the main function of the PM and modules powered by that same PM **shall not** be impacted. This includes, but is not limited to PM's MP, ENABLE# and PWR channels associated with that same PM.

Property of CERN - For Internal Use Only – External Distribution Prohibited

4.4.9 Power Module OK

¶ 108 In modular systems, a Power Module OK function is implemented to facilitate arbitration at startup and may also be used in redundant systems to facilitate PM failover. The assertion of a PM_OK# signal is a positive indication of the health of the PM.

Requirements

REQ 4.135 A Power Module **shall** implement Power Module OK functionality with a PM_OK# output signal and one PMP_[A/B/C]# input signal for each other Power Module in the system.

REQ 4.136 A Power Module **shall** only assert it's PM_OK# signal if it is present and capable of delivering power to all outputs.

REQ 4.137 On power-up and hot insertion, a PM **shall** follow the algorithm described in Section 4.4.11.1 before asserting it's PM_OK# signal.

4.4.10 Power Module Reset

¶ 109 In modular systems, a Power Module Reset function is implemented to facilitate the reset of a PM by another PM under the command of the Carrier Manager.

¶ 110 This type of PM reset will reset the PM-EMMC and disable all Power Channels powered by that same PM. This is implemented to disconnect a non-functional, and possibly non-recoverable, PM.

Requirements

REQ 4.138 A Power Module **shall** implement Power Module Reset functionality with one RST_PM_IN# input signal and one RST_PM_[A/B/C]# output signal for each other Power Module in the system.

REQ 4.139 An assertion of a PM's RST_PM_IN# **shall** reset the PM_EMMC.

REQ 4.140 An assertion of a PM's RST_PM_IN# **shall,** without relying on the PM_EMMC, disable all Power Channels, de-assert all ENABLE# outputs and de-assert PM_OK#.

4.4.11 System power-up

¶ 111 Power management of the MicroTCA Carrier has two distinct stages.

¶ 112 The Early Power stage starts from the moment a source of energy is made available to the PM and ends when the Carrier Manager assumes control of power management tasks.

¶ 113 During Early Power, select Power Channels operate in autonomous mode. Autonomous mode addresses the need for MCHs and CUs to be powered up without the involvement of the Carrier Manager.

¶ 114 The Normal Power stage starts once a Carrier Manager is elected by one or more powered and initialized MCHs. In the Normal Power stage, the Carrier Manager assumes control of application of MP, PWR and ENABLE# for all load modules and the PMs do not autonomously enable power to any load modules.

Property of CERN - For Internal Use Only – External Distribution Prohibited

¶ 115 Autonomous mode may also be used during system maintenance, for example, where all MCHs are removed from a system but the remaining load modules must continue to operate undisturbed.

4.4.11.1 Early Power

¶ 116 In the Early Power stage, critical systems elements can be powered up without the involvement of the Carrier Manager.

Requirements

REQ 4.141 When first energized, and before a Carrier Manager is elected and functional, a Power Subsystem **shall** support Early Power operation.

REQ 4.142 During Early Power, and for each MCH and CU present in the Carrier, the Power Subsystem **shall** apply MP, assert ENABLE# and apply PWR autonomously, i.e. without the involvement of the Carrier Manager.

REQ 4.143 During Early Power, the Power Subsystem **shall not** apply MP, nor assert ENABLE#, nor apply PWR to any AMC present in the Carrier.

REQ 4.144 During Early Power, and if multiple PMs (or PDMs) are available, the following algorithm **shall** be used for determining and reporting the Startup Power Module:

- 1) Apply input power or hot-plug a PM
- 2) When the PM is ready to turn on output channels to the MCH and CU, test for assertion of PM_OK# from another PM
- 3) If PM_OK# from one or more PMs is asserted: Do not assert PM_OK#; Do not turn on power to MCHs and CUs; Go to Step 5). If PM_OK# from another PM is not asserted: Assert PM_OK#; Go to Step 4)
- 4) To test for simultaneous turn on, after 500 us, retest for assertion of PM_OK# from other PMs. If other PMs are asserting PM_OK#: The PM with the lowest site number, and asserting PM_OK#, is designated as the Startup PM and provides the primary source of power for MCHs and CUs; Deassert PM_OK# on all other PMs and do not allow them to provide power to MCHs and CUs. If other PMs are not asserting PM_OK#: This PM is the designated Startup PM.
- 5) While waiting for PM Heartbeat command from the Carrier Manager, the PMs that are not asserting PM_OK# monitor for the deassertion of the PM_OK# from the designated Startup PM. If deassertion is detected, i.e. designated Startup PM has failed, Go to Step 2.
- 6) When the PM Heartbeat command is first detected by any PM, that PM asserts it's own PM_OK# signal.

4.4.11.2 Normal Power

¶ 117 In the Normal Power stage, the Carrier Manager assumes control of application of MP, PWR and ENABLE# for all load modules and the PMs do not autonomously enable power to any load modules.

Property of CERN - For Internal Use Only – External Distribution Prohibited

Requirements

REQ 4.145 The Power Subsystem **shall** support Normal Power operation once a Carrier Manager is managing the MicroTCA Carrier as indicated by the PM Heartbeat command described in Section 3

REQ 4.146 During Normal Power, the application of MP and PWR, and the assertion of ENABLE# signals to all load modules, including MCHs and CUs, **shall** be performed only under the control of the Carrier Manager.

4.4.11.3 Autonomous operation

¶ 118 Autonomous operation applies only to each MCH and CU channel that is supported by a Power Subsystem. This facilitates the powering of Carrier elements when a Carrier Manager is not present. This is the case at system start-up and may also occur at other times, e.g. during system maintenance where MCHs are removed.

¶ 119 Autonomous operation occurs in the Early Power stage and a transition to autonomous operation also takes place in the absence of a PM Heartbeat command or if all the MCH PS1# signals specified in the “PM Heartbeat” command are deasserted.

¶ 120 Only those channels assigned to power each MCH and each CU revert to autonomous mode. PM_OK# signals are not deasserted on any PM to prevent a newly inserted PM from being assigned as a Startup PM. Refer to the algorithm in Section 4.4.11.1 for further detail.

Requirements

REQ 4.147 Only those channels assigned to power each MCH and each CU **shall** revert to autonomous operation if a Carrier Manager fails to send the “PM Heartbeat” command within the specified time or if all the MCH PS1# signals specified in the “PM Heartbeat” command are deasserted.

REQ 4.148 Previously asserted PM_OK# signals **shall not** be deasserted when the Power Subsystem reverts to autonomous mode.

REQ 4.149 Reverting to autonomous operation **shall not** alter the states of the AdvancedMCs, CUs nor MCHs that remain present in the system.

4.4.12 Input voltage sensors

¶ 121 Input voltage sensors are used to facilitate both orderly power-up and power-down in the event of discharging batteries or brownout conditions. This is particularly important in DC-powered systems, where batteries can be damaged by excessive discharging.

Requirement

REQ 4.150 Each Power Module or Power Subsystem EMMC **should** implement Input Voltage Sensors, as defined in Section 3 for each power feed to the system or to a Module.

4.4.13 Temperature sensors

¶ 122 The management of the thermal environment is critical to the reliability of a MicroTCA system and is supported by temperature sensors.

Property of CERN - For Internal Use Only – External Distribution Prohibited

Requirements

REQ 4.151 Each Power Module or Power Subsystem EMMC **shall** support at least two temperature sensors, as defined in Section 3.

REQ 4.152 Each Power Module or Power Subsystem EMMC **may** support more than two temperature sensors.

4.4.14 Power Module Extraction Switch

¶ 123 In modular systems, the Power Module extraction switch is used in conjunction with the Blue LED, described in Section 4.4.15, to facilitate an orderly removal of a Power Module.

¶ 124 In many systems, the extraction switch will be implemented using an AMC Module Handle or similar for consistency. However, simpler or lower cost systems might choose to implement with a device such as a toggle or push-button switch.

¶ 125 If an AMC Module Handle is not being used, the only necessary function of the switch is to request extraction. If a toggle switch is used, it is recommend that the switch functionality of the AMC Module Handle be emulated. If a push-button switch is used, the PM might require extraction and re-insertion to cancel a request for extraction.

Requirements

REQ 4.153 A Power Module **shall** implement an extraction switch.

REQ 4.154 A Power Module **should** use an AMC Module handle, or similar, for consistency of operation.

REQ 4.155 A Power Module **may** use a different switch mechanism so long as it can be used to signal a request for extraction.

REQ 4.156 The Power Module **shall** debounce the extraction switch signal in either hardware or firmware so that the EMMC does not generate multiple events from a single change of state.

4.4.15 Blue LED

¶ 126 In modular systems, the Blue LED is used in conjunction with the PM extraction switch, described in Section 4.4.14, to facilitate an orderly removal of a Power Module.

¶ 127 The Blue LED is local to the Power Module. The Blue LED is mounted on the front of the Module and is used to provide basic feedback to the user on the Hot Swap state of the Module. The Blue LED states are off, short blink, long blink. Once Management Power is available to the Module, the Blue LED is turned on as soon as possible. Since the Carrier Manager is responsible for the Module's Hot Swap state, it controls the state of the corresponding Module's Blue LED during various operational states of the Module. See the "FRU states" table and the "Managed FRU state transition diagram" in the AdvancedTCA Base Specification for the typical use of the Blue LED during the various operational states. The Blue LED is off when a Module is operational and unsafe for extraction. When the Blue LED is on, the Module can safely be extracted.

Property of CERN - For Internal Use Only – External Distribution Prohibited

Requirements

REQ 4.157 A Power Module **shall** implement the Blue LED, consistent with PICMG 3.0, R2.0, Section 3.2.5.1 Blue LED, unless excepted by this specification.

REQ 4.158 The Blue LED **shall** be powered from the Shared Management Power (SMP), when implemented, otherwise from Management Power (MP).

REQ 4.159 Upon insertion of the Power Module or power up of the Shelf, the Blue LED **shall** be turned on as soon as possible without relying on the Carrier Manager.

REQ 4.160 Power Modules **shall** support the LED commands for control of the Blue LED as described in the ATCA Base Specification. Specifically, Modules **shall** support the Blue LED in the context of the following LED commands: “Get FRU LED Properties,” “Get LED Color Capabilities,” “Get FRU LED State,” and “Set FRU LED State.”

REQ 4.161 Power Modules **shall** support the Lamp Test function for the Blue LED as defined in Section 3.2.5.6 “FRU LED Control Commands” of the AdvancedTCA Base Specification.

4.4.16 LED1

¶ 128 LED1 typically provides basic feedback about failures and out-of-service status. When LED1 is illuminated a red/amber color, this indicates a failure of the Power Module.

Requirements

REQ 4.162 In a modular implementation, LED1 **shall** be implemented and communicate a Power Module failure by radiating red/amber light.

REQ 4.163 LED1, if implemented, **shall** be powered from Shared Management Power (SMP), since failure and out-of-service cases can occur during a time when input power has not been applied.

REQ 4.164 Power Modules **shall** support the LED commands for control of LED1 as described in the ATCA Base Specification. Specifically, Modules **shall** support LED1 in the context of the following LED commands: “Get FRU LED Properties,” “Get LED Color Capabilities,” “Get FRU LED State,” and “Set FRU LED State.”

4.4.17 Other LEDs

¶ 129 Power Modules optionally implement additional LEDs that are controlled by the PM_EMMC. Application function and placement of any such additional LEDs is not addressed by this specification.

Requirement

REQ 4.165 Other LEDs **may** be implemented as necessary.

4.5 Connectors

¶ 130 To encourage a level of standardization in Power Module implementation, a standard Backplane Connector is recommended, and Input Connectors are recommended for both +24V and -48V applications.

Property of CERN - For Internal Use Only – External Distribution Prohibited

¶ 131 These Connectors are defined in detail in the Section 7.

¶ 132 The Connectors are optimized for current levels associated with Power Modules that are rated at approximately 600 W and that support the maximum number of MCH, AdvancedMC, and Cooling Unit Channels.

¶ 133 This does not preclude their use in smaller systems, although the size constraints and other factors may be a consideration.

4.5.1 Power Module Output Connector

¶ 134 The preferred Power Module Output Connector is specified in detail in Section 7. Discussion in this section is limited to functionality that directly affects design and operation of a specific Power Module.

Requirement

REQ 4.166 A modular implementation of the Power Subsystem **should** use the Power Module Output Connector defined in Section 7.

4.5.2 Power Module Input Connectors

¶ 135 To encourage a level of standardization in Power Module implementation, two preferred Power Module Input Connectors are specified in detail in Section 7. One is preferred for –48 V and –60 V applications and the other for +24 V applications, where higher current is required for a given power level.

4.5.2.1 –48V and –60V DC Connector

Requirements

REQ 4.167 A Power Module designed for use in –48 V or –60 V applications **should** use the 7W2 D-subminiature power input Connector defined in Section 7.

REQ 4.168 A Power Module Input Connector used in –48 V or –60 V applications **should** use the following pin assignments:

- P1: –48 V/60 V RETURN
- P2: –48 V/60 V
- 1: Control
- 2: Control Return

4.5.2.2 +24V DC Connector

Requirements

REQ 4.169 A Power Module designed for use in +24 V applications **should** use the 9W4 D-subminiature Power Module Input Connector defined in Section 7.

REQ 4.170 A Power Module Input Connector used in +24 V applications **should** use the following pin assignments:

Property of CERN - For Internal Use Only – External Distribution Prohibited

- P1: +24 V
- P2: +24 V RETURN
- 1: Control
- 2: Control Return

4.5.2.3 DC input cabling considerations

Requirements

REQ 4.171 The Control and Control Return sockets on the mating half of the 7W2 connector **shall** be tied together.

REQ 4.172 The Control and Control Return sockets on the mating half of the 9W4 connector **shall** be tied together.

4.5.2.4 AC Connector

Requirement

REQ 4.173 A Power Module designed for use in AC-powered applications **should** utilize IEC320-style Connectors or similar.

4.6 Single-Width, Full-Height Power Module

¶ 136 This section describes a Power Module which occupies a Slot in a MicroTCA Subrack. This Power Module is intended for uses in applications with the following requirements:

- Power Module is an all-in-one solution, including power conditioning, power conversion, and radial output power management
- Power Module is located in the same MicroTCA Subrack as AdvancedMCs and MCHs
- Cooling is provided by the system, and Power Modules do not have integral fans or other cooling devices
- Supports N+1 redundancy of output Channels, where N=1, 2, or 3
- Supports –48 V systems
- Power level is specifically not addressed for the following reasons:

  - Optimization of power level is application-dependent.
  - Achievable densities will increase with time
  - Power level and power dissipation are dependent on the design of the system's thermal management

¶ 137 Some applications may not require that all of these features be implemented. For example, cooling may be handled independently of the MicroTCA Carrier.

¶ 138 The predominance of "should" statements in Section 4.6 is intended to encourage standardization of form, fit, and function. For the most part, "shall" statements are avoided, as alternative implementations are permitted by specification. As an overall principle for the requirements of this section, however, it is recommended that the "shoulds" be interpreted as

Property of CERN - For Internal Use Only – External Distribution Prohibited

"shalls" for those PM designs where interoperability of PMs (and possibly even MCHs) from different suppliers is required. It is further recommended that the implications of not implementing any of the "shoulds" be thoroughly understood by the system integrator.

¶ 139 Requirements are not repeated in Section 4.6 if already addressed by other sections of the specification.

4.6.1 Inputs

4.6.1.1 Input feeds

¶ 140 Input feed considerations are described in Section 4.8 of this document for –48 V DC input systems.

¶ 141 If the Power Module is intended for use in systems supporting 2+1 or 3+1 Module redundancy, then the Power Module must be designed for more than one input feed. This is illustrated in Figure 4-14. If the Power Module is intended for non-redundant or 1+1 redundant systems, then it need only support a single input feed, as illustrated in Figure 4-15.

¶ 142 A power input Connector style is recommended to encourage standardization and is specified for this Module.

Requirements

REQ 4.174 The Power Module **should** support two input feeds.

REQ 4.175 The Power Module **may** support only one input feed.

REQ 4.176 The Power Module **should** support –48 V DC systems.

REQ 4.177 The Power Module **may** support both –48 V DC and –60 V DC systems

4.6.1.2 Power Module Input Connector

¶ 143 A pair of control contacts, with last-mate sequencing relative to the power pins, can be used on the input connector for hot plug / hot unplug control purposes. If implemented, the pair of control contacts are shorted together in the mating half of the connector on the power cable.

Requirements

REQ 4.178 The Power Module **should** use the D-subminiature 7W2 Connector specified in the Section 7 as it's Power Module Input Connector.

REQ 4.179 The Power Module Input Connector **should** use the pin assignments described in Section 4.5.2.1.

REQ 4.180 For a reliable insertion and extraction of the Power Module Input Connector, the power supply **may** utilize the shorted control pins to control circuits internal to the Power Module.

REQ 4.181 If the Power Module supports two input feeds and if input ORing MOSFETs are used instead of diodes, the ORing MOSFETs associated with the feed whose cable is being removed **shall** be turned off if the mating cable is removed.

Property of CERN - For Internal Use Only – External Distribution Prohibited

4.6.1.3 Input transients

¶ 144 Guidance relating to input transients applicable to DC feeds in a Telecommunications environment is provided in Section 4.8.1.

Requirement

REQ 4.182 For -48 V systems, sizing of holdup circuitry for a zero-voltage transient **should** assume that the input voltage is at –50 V immediately prior to the transient.

4.6.1.4 Low input voltage

¶ 145 This specification is primarily intended to avoid damaging a power plant through excessive draining of its batteries.

¶ 146 For purposes of the requirement below, an undervoltage condition is when either (1) the input voltage is too low to permit proper operation of the Power Module or (2) if the Power Module is commanded by the Carrier Manager that voltage is too low to permit proper system operation or to protect the power source.

Requirements

REQ 4.183 A Power Module **should** ensure that current draw from an input feed is less than 25 mA in the event of an undervoltage condition.

REQ 4.184 An undervoltage condition **should** only be considered valid if the voltage is less than the minimum specified operating voltage of Table 4-3.

4.6.2 Outputs

¶ 147 The Power Module is intended to support a fully configured MicroTCA system consisting of up to 2 MCHs, 2 CUs and 12AMCs.

¶ 148 It is anticipated that this type of configuration will utilize intelligent Cooling Units with input filters and fan speed control for both startup and steady-state conditions. This allows the output current characteristics of the CU power channels to be implemented in a manner similar to that of AdvancedMCs and MCHs.

Requirements

REQ 4.185 The Power Module **should** support two MCHs with the control and protection characteristics specified in Section 4.2.1.

REQ 4.186 The Power Module **should** support twelve AdvancedMCs with the control and protection characteristics specified in Section 4.2.3.

REQ 4.187 The Power Module **should** support two CUs with the control and protection characteristics specified in Section 4.2.3.

REQ 4.188 The Power Module **should not** limit continuous current draw on a CU's Payload Power Channel to less than 7.6 A.

REQ 4.189 The Power Subsystem **should** limit steady state current draw on a CU's Payload Power Channel to not greater than 9.7 A.

Property of CERN - For Internal Use Only – External Distribution Prohibited

REQ 4.190 The Power Module **should** limit transient current levels on a CU's Payload Power Channel to less than 19.4 A for a period of less than 200 ms, with a duty cycle not to exceed 1% in case of recurring events.

REQ 4.191 The current limit circuitry on a Payload Power Channel, even if programmed to reduced current level, **should not** prevent charging a 1600 µF capacitor to within CU's Payload Power regulation limits within a time period of 25 ms.

4.6.2.1 Power Module Output Connector

¶ 149 The Power Module Output Connector is described in detail in Section 7.

¶ 150 This section augments Section 7 with a pin assignment in Figure 4-8 and functional descriptions in Table 4-1. This pin list defines the function and mating sequence of each of the electrical contacts of the Connector.

Figure 4-8 Connector pin assignments

P1	PP_M1	PP_1	P13
P2	PP_CU1	PP_2	P14
P3	PP_CU2	PP_3	P15
P4	GND	PP_4	P16
P5	GND	PP_5	P17
P6	GND	PP_6	P18
P7	GND	PP_7	P19
P8	GND	PP_8	P20
P9	GND	PP_9	P21
P10	GND	PP_10	P22
P11	GND	PP_11	P23
P12	PP_M2	PP_12	P24

1	PS_PM#	PM_OK#	PS1_M1#	PS1_CU1#	EN_M1#	EN_CU1#	MP_M1	MP_CU1
2	TCK	PMP_A#	PS1_2#	PS1_1#	EN_2#	EN_1#	MP_2	MP_1
3	TMS	PMP_B#	PS1_4#	PS1_3#	EN_4#	EN_3#	MP_4	MP_3
4	TRST#	PMP_C#	PS1_6#	PS1_5#	EN_6#	EN_5#	MP_6	MP_5
5	TDO	RST_PM_IN#	PS1_8#	PS1_7#	EN_8#	EN_7#	MP_8	MP_7
6	TDI	RST_PM_A#	PS1_10#	PS1_9#	EN_10#	EN_9#	MP_10	MP_9
7	GA0	RST_PM_B#	PS1_12#	PS1_11#	EN_12#	EN_11#	MP_12	MP_11
8	GA1	RST_PM_C#	PS1_M2#	PS1_CU2#	EN_M2#	EN_CU2#	MP_M2	MP_CU2
9	GA2	SMP	SCL_B	SDA_B	SCL_A	SDA_A	PWR_ON_M2	PWR_ON_M1
	A	B	C	D	E	F	G	H

Property of CERN - For Internal Use Only – External Distribution Prohibited

Table 4-1 Pin functionality

Signal	Description	Sequence
PP_1	Payload Power to AMC#1	Second
PP_2	Payload Power to AMC#2	Second
PP_3	Payload Power to AMC#3	Second
PP_4	Payload Power to AMC#4	Second
PP_5	Payload Power to AMC#5	Second
PP_6	Payload Power to AMC#6	Second
PP_7	Payload Power to AMC#7	Second
PP_8	Payload Power to AMC#8	Second
PP_9	Payload Power to AMC#9	Second
PP_10	Payload Power to AMC#10	Second
PP_11	Payload Power to AMC#11	Second
PP_12	Payload Power to AMC#12	Second
PP_CU1	Payload Power to CU#1	Second
PP_CU2	Payload Power to CU#2	Second
PP_M1	Payload Power to MCH #1	Second
PP_M2	Payload Power to MCH #2	Second
GND	Logic Ground	First
GA0	Geographical Address Bit 0	Third
GA1	Geographical Address Bit 1	Third
GA2	Geographical Address Bit 2	Third
SMP	Shared Management Power	Third
MP_1	Mgmt Power to AMC#1	Third
MP_2	Mgmt Power to AMC#2	Third
MP_3	Mgmt Power to AMC#3	Third
MP_4	Mgmt Power to AMC#4	Third
MP_5	Mgmt Power to AMC#1	Third
MP_6	Mgmt Power to AMC#6	Third
MP_7	Mgmt Power to AMC#7	Third
MP_8	Mgmt Power to AMC#8	Third
MP_9	Mgmt Power to AMC#9	Third
MP_10	Mgmt Power to AMC#10	Third
MP_11	Mgmt Power to AMC#11	Third
MP_12	Mgmt Power to AMC#12	Third
MP_CU1	Mgmt Power to CU#1	Third
MP_CU2	Mgmt Power to CU#2	Third
MP_M1	Mgmt Power to MCH #1	Third
MP_M2	Mgmt Power to MCH #2	Third
PM_OK#	Power Module Present and OK (Output)	Third
PMP_A#	PM Present and OK A	Third
PMP_B#	PM Present and OK B	Third
PMP_C#	PM Present and OK C	Third
PWR_ON_M1	Power-On Pin from MCH #1	Third
PWR_ON_M2	Power-On Pin from MCH #2	Third
PS_PM#	Presence of Power Module	Last Mate

Signal	Description	Sequence
RST_PM_IN#	Resets Power Module EMMC (Input)	Third
RST_PM_A#	Commands reset of another PM_EMMC	Third
RST_PM_B#	Commands reset of another PM_EMMC	Third
RST_PM_C#	Commands reset of another PM_EMMC	Third
PS1_M1#	Detects presence of MCH #1	Third
PS1_M2#	Detects presence of MCH #2	Third
PS1_1#	Detects presence of AMC#1	Third
PS1_2#	Detects presence of AMC#2	Third
PS1_3#	Detects presence of AMC#3	Third
PS1_4#	Detects presence of AMC#4	Third
PS1_5#	Detects presence of AMC#5	Third
PS1_6#	Detects presence of AMC#6	Third
PS1_7#	Detects presence of AMC#7	Third
PS1_8#	Detects presence of AMC#8	Third
PS1_9#	Detects presence of AMC#9	Third
PS1_10#	Detects presence of AMC#10	Third
PS1_11#	Detects presence of AMC#11	Third
PS1_12#	Detects presence of AMC#12	Third
PS1_CU1#	Detects presence of CU#1	Third
PS1_CU2#	Detects presence of CU#2	Third
EN_1#	Commands reset of AMC #1 MMC	Third
EN_2#	Commands reset of AMC #2 MMC	Third
EN_3#	Commands reset of AMC #3 MMC	Third
EN_4#	Commands reset of AMC #4 MMC	Third
EN_5#	Commands reset of AMC #5 MMC	Third
EN_6#	Commands reset of AMC #6 MMC	Third
EN_7#	Commands reset of AMC #7 MMC	Third
EN_8#	Commands reset of AMC #8 MMC	Third
EN_9#	Commands reset of AMC #9 MMC	Third
EN_10#	Commands reset of AMC #10 MMC	Third
EN_11#	Commands reset of AMC #11 MMC	Third
EN_12#	Commands reset of AMC #12 MMC	Third
EN_CU1#	Commands reset of CU #1 EMMC	Third
EN_CU2#	Commands reset of CU #2 EMMC	Third
EN_M1#	Commands reset of MCH #1 MCMC	Third
EN_M2#	Commands reset of MCH #2 MCMC	Third
SCL_A	Serial Clock A	Third
SCL_B	Serial Clock B	Third
SDA_A	Serial Data A	Third
SDA_B	Serial Data B	Third
TCK		Third
TMS		Third
TRST#		Third
TDO		Third
TDI		Third

Note: The differences in the length of second and third mate pins are minimal and not intended for sequencing design.

Note: # Suffix denotes an active low assertion.

Requirements

REQ 4.192 The Power Module **should** use the output Power Module Output Connector specified in detail in Section 7.

REQ 4.193 The Power Module Output Connector **should** use the pin assignments described in Figure 4-8.

Property of CERN - For Internal Use Only – External Distribution Prohibited

4.6.3 Bulk supply current limit

¶ 151 In Power Modules rated for more than 150W, the bulk 12V supply must be considered in systems designed for compliance with GR1089 R9-14. The short circuit rating of this bulk supply is used to size the user-configurable means for connecting equipment chassis reference Ground and Logic Ground.

Requirements

REQ 4.194 The Power Module **should** limit short circuit current on its bulk 12V supply to less than 15A.

REQ 4.195 If a user-configurable means for connecting equipment chassis reference Ground and Logic Ground is available in the shelf utilizing one or more of these Power Modules, it **shall** be capable of continuously conducting at least 15A.

4.6.4 Control and monitoring

Requirements

REQ 4.196 The Power Module **should** support three Geographical Address bits, GA0, GA1, and GA2.

REQ 4.197 A Power Module **may** support programmable current limiting on each Channel.

REQ 4.198 A Power Module **may** support a JTAG test interface using the optional pins assigned on the Power Module Output Connector.

4.6.5 Redundancy

¶ 152 As previously discussed, the module defined in Section 4.6 is intended to encourage standardization of form, fit, and function with respect to a Power Module designed for redundant PM applications in a -48V environment.

¶ 153 For the most part, “shall” statements are avoided. However, the “shoulds” might be considered “shalls” for those designs where interoperability of PMs from different suppliers is desirable.

4.6.5.1 Overview

¶ 154 The Power Module described in this section, in conjunction with the platform management described in Section 3, “Hardware platform management”, supports N+1 redundancy of the Power Module and Payload and Management Power.

¶ 155 The techniques described in Section 4.3.4 are utilized and expanded to a fully-populated MicroTCA system.

¶ 156 Redundancy operation is summarized as follows:

- One Power Module is assigned to be the Redundant Power Module. All other Modules are Primary Power Modules.
- The Carrier Manager cannot assign any Channels on the Redundant Power Module to be the primary power source for any load.

Property of CERN - For Internal Use Only – External Distribution Prohibited

- The Carrier Manager assigns a Channel from one of the primary units to be the primary source of Payload and Management Power for a load.
- The Carrier Manager assigns the corresponding Channel on the Redundant Power Module to be the redundant source of Payload and Management Power for that same load.
- The Carrier Manager can assign a load to any Primary Power Module, as long as it does not exceed the power rating of the Module.
- In the event of a Power Module failure on a Primary Power Module, the Redundant Power Module automatically takes over the loads from the Primary Power Module and simultaneously disables all other Channels.
- The Redundant Power Module then becomes a Primary Power Module.
- When a replacement unit is loaded, it is assigned to be the new Redundant Module and configured appropriately.

4.6.5.2 Voltage budgets

¶ 157 Because redundancy is based on diode drops, voltage drops in the primary and redundant paths must be carefully considered for correct operation.

¶ 158 Transient events could cause the voltage to drop below the AdvancedMC normal operating voltage of 10.8 V, but would maintain the voltage above the absolute minimum operating specification of 10.0 V (see AMC.0, R1.0, REQ 4.5).

Requirements

REQ 4.199 The Backplane voltage drop for Payload Power **should** be less than 100 mV over all normal operating conditions, including temperature variations. This voltage is measured from the Backplane side of the Power Module output Connector to the Backplane side of the AdvancedMC/MCH/CU Connector.

REQ 4.200 A Primary PM **should** have a Payload Power output voltage between 12.25 and 12.95 V DC over all normal operating conditions, inclusive of line, load, and temperature as measured on the backplane at the pins of the Power Module Output Connector.

REQ 4.201 A Redundant PM **should** have a Payload Power output voltage between 11.60 and 12.00 V DC at no load and over all other normal operating conditions, inclusive of line and temperature. This cannot be measured on the Backplane in an operating system under operation, but if necessary can be measured on the power conversion side of the ORing device inside the Power Module.

REQ 4.202 Primary and Redundant Power Modules **should** provide sufficient energy storage to maintain Payload Power voltage droop of less than 1 V in magnitude during transition from Primary to Redundant Power Modules.

REQ 4.203 The Backplane voltage drop for Management Power **should** be less than 20 mV over all normal operating conditions, including temperature variations. This is measured from the Backplane side of the Power Module output Connector to the Backplane side of the AdvancedMC/MCH/CU Connector.

REQ 4.204 Under all normal operating conditions, including line, load, and temperature, the MP voltage **should not** be not less than 3.16 V and not more than 3.63 V. This voltage is measured on the Power Module output Connector

Property of CERN - For Internal Use Only – External Distribution Prohibited

REQ 4.205 Primary and Redundant Power Modules **should** provide sufficient energy storage to maintain Management Power voltage droop of less than 150 mV in magnitude during transition from Primary to redundant Power Modules. Note that this could cause the voltage to drop below the AdvancedMC normal operating voltage of 3.3 V –5%, but would maintain the voltage above the absolute minimum operating specification of 3.3 V –10% (see AMC.0, R1.0, REQ 4.9).

4.6.5.3 Power Module to load interconnect

¶ 159 The interconnections of Power Modules and loads are illustrated in Figure 4-9 for the most general case of 3+1 redundancy. A given load is tied to the same output Channel of each Power Module. The autonomous PM present bus is described in more detail in the following subsections.

¶ 160 The Carrier Manager will assign which Modules are Primary Power Modules and which Module is the Redundant Power Module. These assignments are not constant and may be reassigned as necessary and appropriate.

¶ 161 Only one Redundant Power Module will be assigned at any time and this, and only this Module will be assigned redundant output Power Channels.

¶ 162 The specification does not require that PMs be populated in any particular site or in any particular order. This is considered implementation specific at a system level and applies also to systems implementing less than four PMs.

Figure 4-9 Example of 3+1 output Channel redundancy

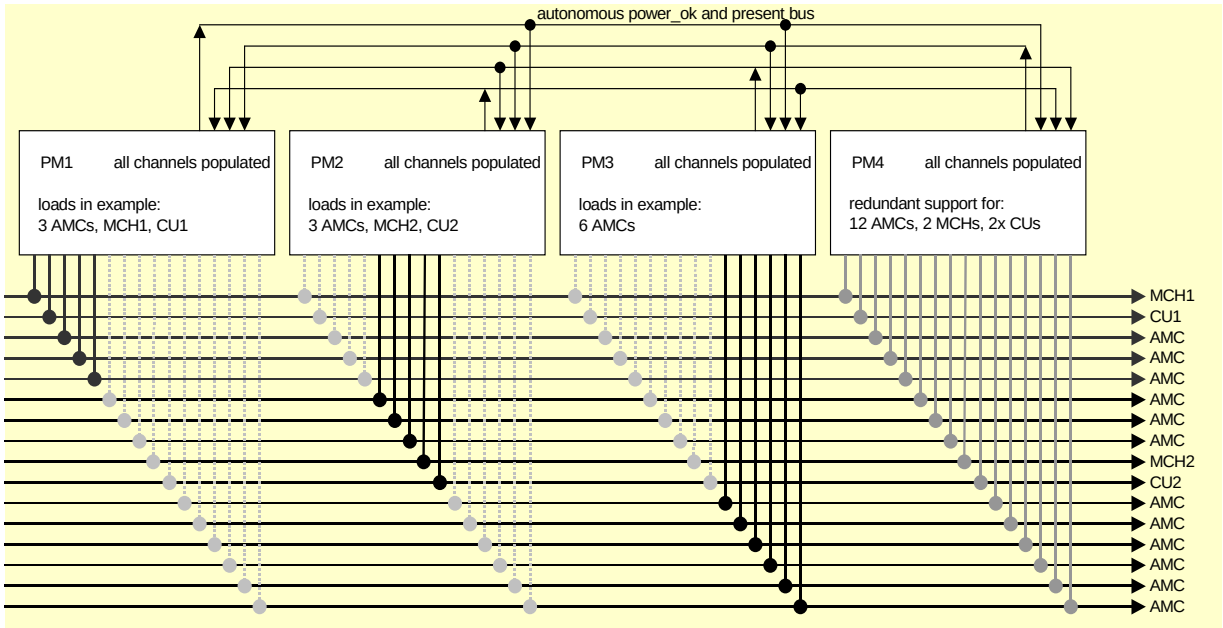

Requirements

REQ 4.206 Power Modules implementing 3+1 redundancy **should** be interconnected with the loads as described in Figure 4-9.

Property of CERN - For Internal Use Only – External Distribution Prohibited

REQ 4.207 Power Modules implementing a non-redundant architectures or a 1+1 or 2+1 redundant architecture **should** be connected as shown in Figure 4-9 with depopulation of the appropriate number of Power Modules.

REQ 4.208 The Carrier Manager **may** rotate the role of the designated Redundant Power Module among available power supplies over the life of the product to equally stress units or to exercise and validate functionality of Redundant Power Module.

4.6.5.4 Inter-Module communication

4.6.5.4.1 Power OK

¶ 163 The primary and redundant Channels for any particular load Channel are located in different Power Modules. Under various scenarios, arbitration between these entities is required.

¶ 164 For example, during startup MCHs and Cooling Units must be autonomously powered. In a system with more than one MCH, the Power Modules must determine how many Modules are present and available and then “self-assign” which Power Module feeds which MCH, etc.

¶ 165 For example, in the event of a loss of a Power Module, this communication can facilitate the turn-on of ORing FETs and the turn-off of unused Channels on the redundant Power Module.

¶ 166 To achieve this, the Power Modules communicate their presence and status with each other, as shown in Figure 4-10 for a four-PM power system.

¶ 167 The specification does not require that PMs be populated in any particular site or in any particular order. This is considered implementation specific at a system level and applies also to systems implementing less than four PMs.

Requirements

REQ 4.209 Power Modules **shall** implement a Power OK function per Section 4.4.9.

REQ 4.210 Power Modules intended for redundant applications **should** implement the interconnect scheme described in Figure 4-10.

REQ 4.211 Power Modules **should** assert PM_OK# by pulling the signal low.

REQ 4.212 A PM **should** pull up each PMP_A/B/C# pin to MP with a 10K ohm resistor.

REQ 4.213 PM_OK# pins **should** be configured with open-collector/drain outputs. The open-collector/drain **should** be capable of sinking 2 mA, while keeping the voltage below 0.8 V.

Property of CERN - For Internal Use Only – External Distribution Prohibited

Figure 4-10 Communication of Power Module presence and power good

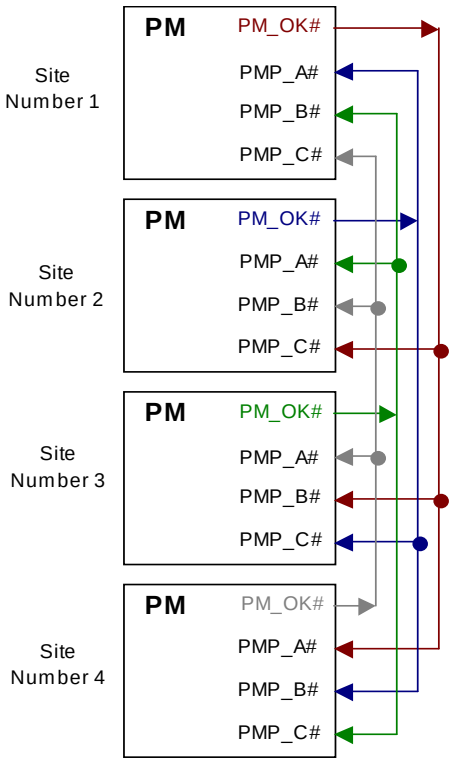

4.6.5.4.2 Reset of PMs

¶ 168 Any Power Module can reset another Power Module under the command of the Carrier Manager.

¶ 169 To achieve this, the Power Modules communicate the reset signals to each other, as shown in Figure 4-11.

¶ 170 This type of PM reset will reset the PM-EMMC and remove power from all MCHs, CUs and AdvancedMCs powered by that same PM. This is implemented to disconnect a non-functional, and possibly non-recoverable, PM.

Requirements

REQ 4.214 Power Modules **shall** implement a Power Module Reset function per Section 4.4.10.

REQ 4.215 Power Modules intended for redundant applications **should** implement the interconnect scheme described in Figure 4-11.

REQ 4.216 A 10.0K ohm resistor **should** pull-up the RST_PM_IN# pin to MP.

REQ 4.217 RST_PM_[A/B/C]# pins **should** be configured with open-collector/drain outputs and the open-collector/drain capable of sinking 1 mA while keeping the voltage below 0.8 V.

REQ 4.218 RST_PM_IN# is edge sensitive and not level sensitive and **should** reset the PM_EMMC on the falling edge when asserted.

REQ 4.219 An assertion of a PM's RST_PM_IN# **should** reset the PM_EMMC.

Property of CERN - For Internal Use Only – External Distribution Prohibited

REQ 4.220 An assertion of a PM's RST_PM_IN# **should,** without relying on the PM_EMMC, disable all Power Channels, de-assert all ENABLE# outputs and de-assert PM_OK#.

Figure 4-11 Communication of PM Reset signals

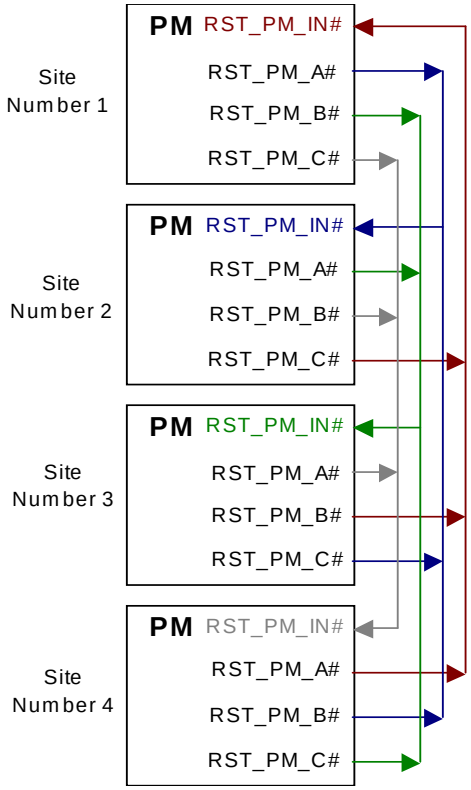

4.6.5.4.3 Shared Management Power

¶ 171 It is desirable that Power Modules maintain communication with the Carrier Manager in the event of a loss of input power. This can be accomplished by incorporating the circuit illustrated in Figure 4-12 in each Power Module.

Requirements

REQ 4.221 Power Modules **should** include the circuit illustrated in Figure 4-12 to support a shared Management Power bus.

REQ 4.222 The PM-EMMC and associated circuitry fed from the Vdd node in **should not** draw more than 100 mA under normal operation.

REQ 4.223 A short circuit in the PM-EMMC and associated circuitry **should not** draw more than 150 mA from SMP.

REQ 4.224 A Power Module **should** be capable of sourcing at least 350 mA to SMP on the backplane to power up to two PM-EMMCs in normal operation and one PM-EMMC under short-circuit protection.

REQ 4.225 The voltage at the SMP node **should** be maintained between 4.5 V and 6.0 V with a nominal voltage of 5.0V while sinking up to 150 mA from the backplane or sourcing up to it's current limit point.

Property of CERN - For Internal Use Only – External Distribution Prohibited

Figure 4-12 Implementation of shared Management Power

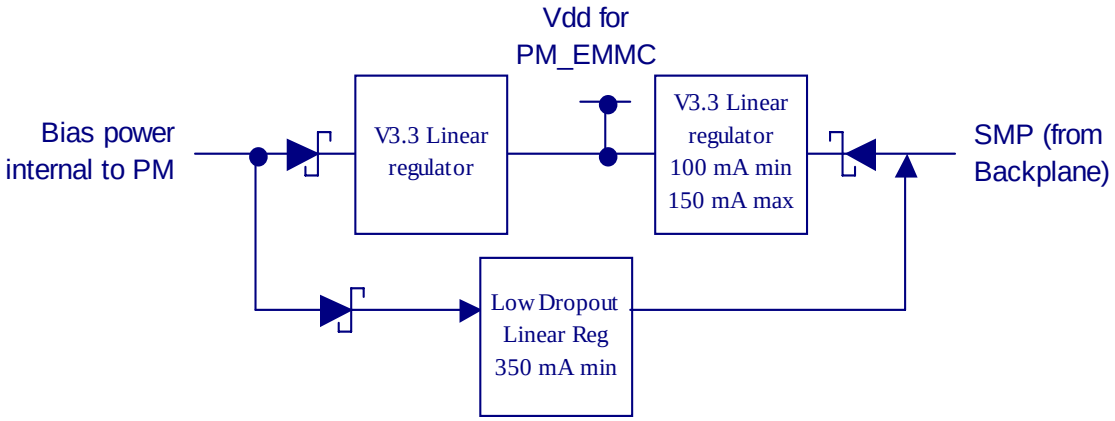

4.6.5.5 Over Current and Channel fault differentiation

¶ 172 An overload condition as a result of an AdvancedMC, MCH, or Cooling Unit failure must be protected against, but it is not considered a failure of the power system and, therefore, it is not desirable that redundant transfer be initiated.

¶ 173 A failing Power Channel, e.g. due to a high resistance "switch", would cause the voltage at the output of the Channel to drop. In a redundant system, this would result in power being drawn from the assigned Redundant Power Module and a 'failover' would be initiated.

Requirements

REQ 4.226 A load failure that causes current levels to exceed the Channel current limit **shall** remove PWR and/or MP from that load, consistent with the protection requirements of Section 4.2, without de-asserting PM_OK# or without initiating a failover to a Redundancy PM.

4.6.5.6 Power Module failure

¶ 174 A Power Module is considered failed when it can no longer perform it's specified tasks including regulating voltage, delivering current, providing system protection and providing communications with the system.

¶ 175 In this regard, the Power Module is expected to monitor it's own health and communicate this to the system via both IPMI and it's PM_OK# signals. This signalling facilitates an orderly "failover" from a Primary PM to the assigned Redundant PM, if present.

¶ 176 Some failure scenarios exist where this communication may not occur due to a failure of the communication circuitry itself. In these scenarios, it is possible that some loads may have power sourced from both primary and redundant channels for a period of time. This single-fault scenario will not damage the system.

Requirements

REQ 4.227 A Power Module **should** monitor its own health and communicate this status via the PM_OK# signal and as required by Section 3.

Property of CERN - For Internal Use Only – External Distribution Prohibited

REQ 4.228 In the event of a Power Module failure, and if the Power Subsystem is configured for redundant operation, the assigned channels on the Redundant PM **shall** be capable of providing power continuously to the loads previously assigned to the Primary PM.

REQ 4.229 The Redundant PM **should** only switch to Primary mode, based on the deassertion of PM_OK# from a Primary PM.

REQ 4.230 In the event that a PM_OK# signal is not properly deasserted on failure of a PM, the Redundant PM **should** monitor a parameter, such as bulk 12V current, that indicates it is no longer operating as a Redundant PM but is now providing power to one or more loads. In that event, it **should not** configure itself as a Primary PM but **should** configure itself to be capable of providing rated load continuously and generate an Event to notify the Carrier Manager of its change of state. The voltage setpoints **should** be maintained at the levels associated with a Redundant PM until commanded by the Carrier Manager to become a Primary PM.

REQ 4.231 A Power Module **should** shut down and notify the system if its bulk 12 V or 3.3 V rails go outside their respective specified regulation bands.

4.6.6 Mechanical

¶ 177 The detailed specifications relevant to the mechanical implementation of a Single-Width, Full-Height Power Module are described in Section 2. These specifications include, but are not limited to, PCB dimensions, Connector locations, allowable component envelopes, and Face Plate design.

¶ 178 It is expected that other aspects of the Power Module implementation, including EMC Gaskets and Labeling, will be implemented in a manner consistent with the specifications of Section 2.

4.6.7 Thermals

¶ 179 Unless the system provides the necessary thermal management capabilities, the maximum allowable dissipation of the Power Module is subject to the same constraints as the maximum allowable dissipation of a like-sized AdvancedMC.

¶ 180 For example, if a Single-Width, Full-Height AdvancedMC is limited to 40 W of dissipation by the cooling system, then unless special provisions have been made by the system, a Single-Width, Full-Height Power Module can only dissipate 40 W.

¶ 181 The output power rating of the Power Module in this case, will be:

¶ 182 Pout_rated = Efficiency * PModule_dissipation/(1-Efficiency)

¶ 183 It should also be noted that Power Module Efficiency is not a constant, but varies with many parameters including line, load, and operating temperature.

4.6.8 Regulatory

4.6.8.1 Safety approvals

¶ 184 The design of the Power Module should not impede system compliance with the various regulatory agencies.

Property of CERN - For Internal Use Only – External Distribution Prohibited

¶ 185 As the intent of this section is to encourage standardization, the relevant requirements of IEC60950-1 are viewed as a minimum requirement.

Requirements

REQ 4.232 The Power Module described in this section **shall** be designed in accordance with requirements set out in IEC60950-1 and equivalent standards (see Section 8).

REQ 4.233 Basic Insulation levels **may** be sufficient to eliminate the need for a Safety Ground depending on hardware design.

4.6.8.2 Electromagnetic compatibility

¶ 186 The design of the Power Module should not impede system compliance with the relevant regulatory agencies.

¶ 187 Guidance related to electromagnetic compatibility issues for DC-powered modules in a Telecommunications environment is provided in Section 4.8.1

¶ 188 Note that the specification of radiated emissions of a stand-alone Power Module is beyond the scope of this document. This is considered a systems integration issue.

4.7 Other mechanical considerations

¶ 189 In some applications it may be desirable to implement a Power Module in a different form factor. Some of the considerations are discussed herein.

4.7.1 Double-Width form factor

¶ 190 The MicroTCA specification permits implementation of Power Modules in a Double-Width form factor.

¶ 191 PCB dimensions and allowable component envelopes for Double-Width form factor Power Modules are described in Section 2.

4.7.2 Form factors other than Full-Height

¶ 192 The MicroTCA specification permits implementation of Power Modules in form factors other than Full-Height, e.g., a 9 HP-high Module.

¶ 193 Detailed descriptions of these form factors are beyond the scope of the specification, although it is expected that they will be implemented in a manner consistent with the style of the Modules whose form factors are specified in detail.

4.8 Power source considerations

Note: IMPORTANT: All tables and figures in this section are included for reference only. Specification compliance should reference the most current version of each referenced standard or document, unless otherwise excepted.

Property of CERN - For Internal Use Only – External Distribution Prohibited

¶ 194 MicroTCA systems may be powered from a variety of sources. Development of the specification and the architectures herein have given consideration to the following sources of power:

- –48 V battery plants
- –60 V battery plants
- +24 V battery plants
- 100 V AC mains power
- 120 V AC mains power
- 230 V AC mains power

¶ 195 To support these differing power sources and to support modular implementations, a number of different Power Module types are anticipated. Each of the power conversion Modules must provide regulated management and Payload Power for the Shelf or sub-Shelf and will include filtering and protection. The three power conversion Modules are listed below:

- Negative DC voltage Module—this Module accepts either –48 V DC or –60 V DC feeds to power the system
- Positive DC voltage Module—this Module accepts +24 V DC to power the system
- AC voltage Module—this Module accepts 100 V, 120 V, or 230 V AC mains to power the system

¶ 196 Within these Module types, subtypes may emerge, depending on the level of optimization required. For example, further optimization of the negative DC voltage Module may result from limiting its input to only –48 V DC battery plants.

¶ 197 Redundant power feeds are optional for MicroTCA systems, regardless of the power source. Depending on the architecture to be implemented, Power Modules may be required to accept one or more power feeds.

¶ 198 In this section, the term “fuse” or “fusing” will be used to describe any circuit protection devices that meet regulatory requirements for interrupting AC or DC power in the event of a fault-induced over current situation. Hot-swap control, or similar, circuits will generally not meet these requirements.

4.8.1 DC power feeds

4.8.1.1 Power distribution

¶ 199 The two primary DC feeds are typically split into a number of branches, but remain electrically isolated. The feeds can be branched by way of a Shelf Power Distribution Unit (PDU) or simply by starring the cabling from a single common point (see Figure 4-13[1]). Each branch connects to a different, independently fused and filtered Shelf or sub-Shelf within the Frame. Shelf-level fusing and filtering prevents downstream shorts and malfunctions from propagating beyond a single Shelf or sub-Shelf.

1. Fuses (or circuit breakers) must be used at the star point, not the load, unless the cables can carry the full current in a fault.

Property of CERN - For Internal Use Only – External Distribution Prohibited

Requirement

REQ 4.234 Regardless of wiring topology, all wiring **shall** be sized to carry the full current load, as limited by the up stream protection device, under fault conditions.

Figure 4-13 DC power distribution with and without a Frame-level PDU

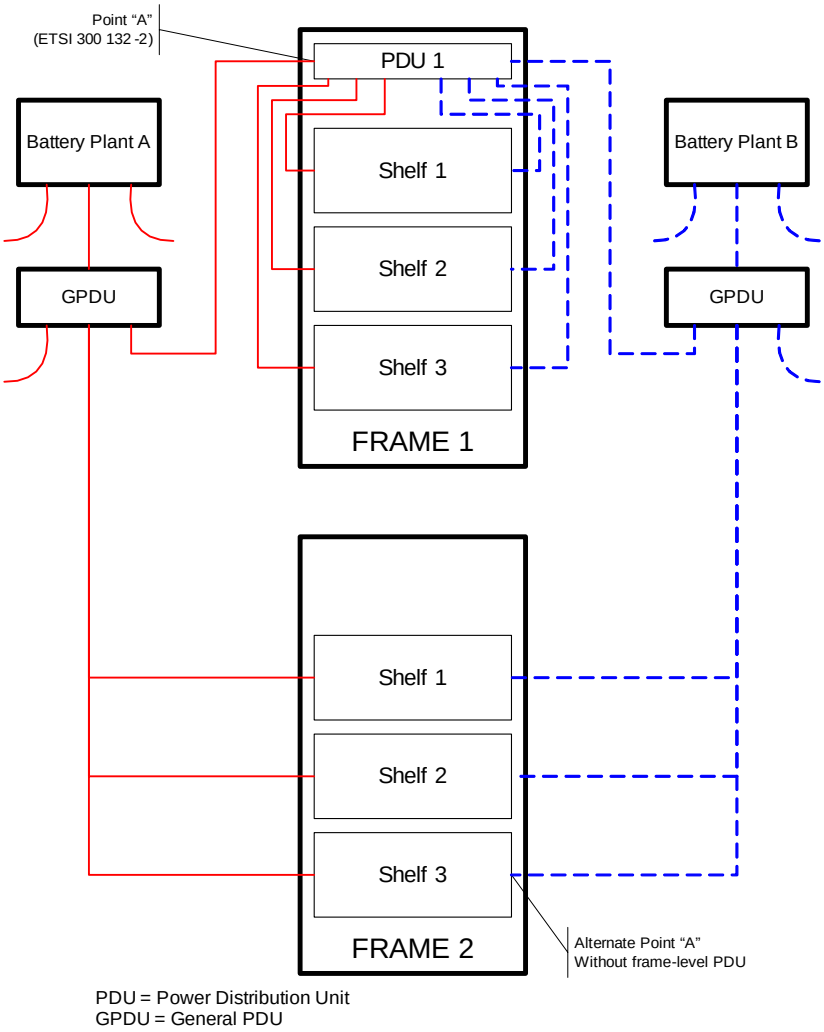

4.8.1.2 Redundant feeds

¶ 200 The first option is shown in Figure 4-14. This option terminates both feeds on a single power conversion Module. Thus, a single Module can be used to supply the entire system, while retaining redundant feeds. Two different configurations for this option are shown in Figure 4-14. Option A maintains separate battery feeds and separate returns, while Option B uses a common return for each feed. In either case, a second power supply Module is not required in this option.

Property of CERN - For Internal Use Only – External Distribution Prohibited

Figure 4-14 Redundant battery feeds to a single Power Module

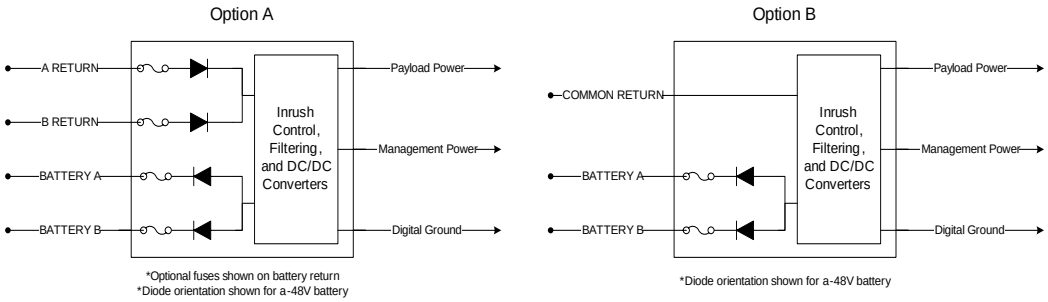

¶ 201 Figure 4-15 shows the second option for terminating redundant feeds in a MicroTCA system. Individual feeds are terminated on separate Power Modules. The outputs of both Power Modules are ORed to provide power for the system. In this case, both the feeds and the Power Modules have redundancy; however, two Modules are required.

Figure 4-15 Redundant battery feeds to separate Power Modules

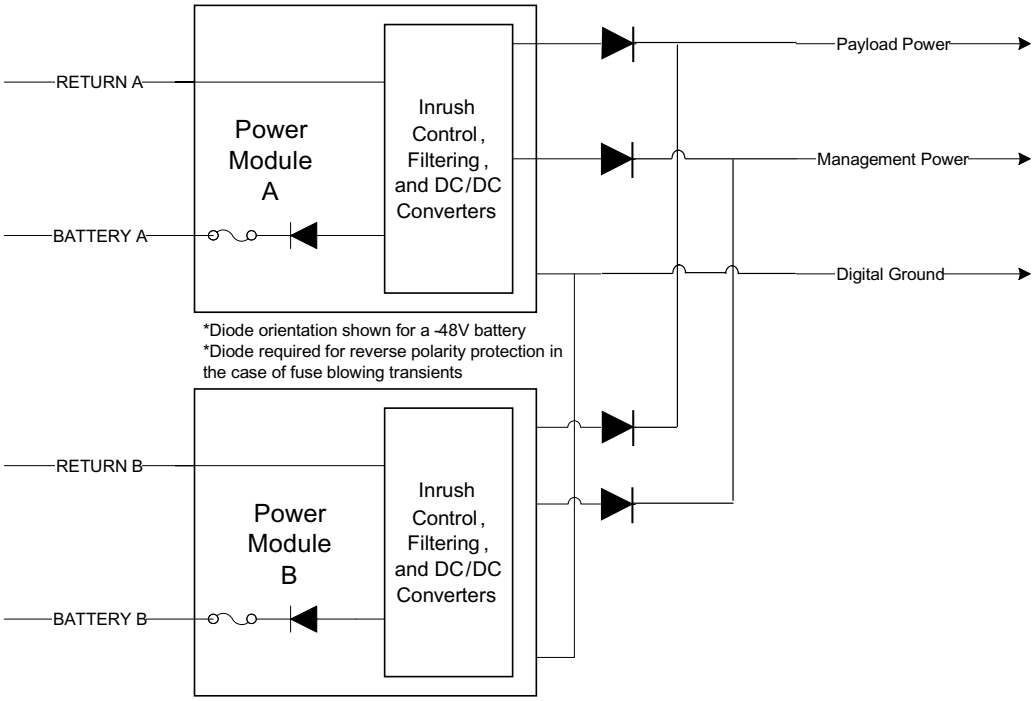

Requirements

REQ 4.235 Systems implementing the scheme in Figure 4-15 or in Figure 4-14 Option A **shall** be designed to prevent current flow between A and B Feeds and A and B Returns.

REQ 4.236 Systems implementing the scheme in Figure 4-14 Option B **shall** be designed to prevent current flow between A and B Feeds.

Property of CERN - For Internal Use Only – External Distribution Prohibited

4.8.1.3 Input fusing and fault protection

Requirements

REQ 4.237 Fuses **shall** be used at the frame's power distribution panel to protect the battery and other systems sharing the battery feed in the event of a low-impedance short within the Shelf.

REQ 4.238 Additional fusing internal to the Power Module **may** be required to satisfy additional regulatory and/or system requirements

4.8.1.4 Inrush current limiting

Requirement

REQ 4.239 The inrush current for a MicroTCA Power Module **shall not** exceed the following inrush current limits (see Table 4-2). Note that the values in Table 4-2 are ratios, not absolute numbers. These are based on the ratio of instantaneous current value (I_t) to the manufacturer's maximum rated continuous current draw (I_m).

Table 4-2 Maximum inrush current ratios

Time Range	Power Module Limits (I_t/I_m)
0 to 0.9 ms	5
0.9 to 3 ms	Logarithmic decline from 5 to 2
3 to 30 ms	1 (I_m)
30 to 100 ms	1

¶ 202 The limits listed in Table 4-2 are reflected in graphical form in Figure 4-16.

Property of CERN - For Internal Use Only – External Distribution Prohibited

Figure 4-16 Maximum inrush current ratio

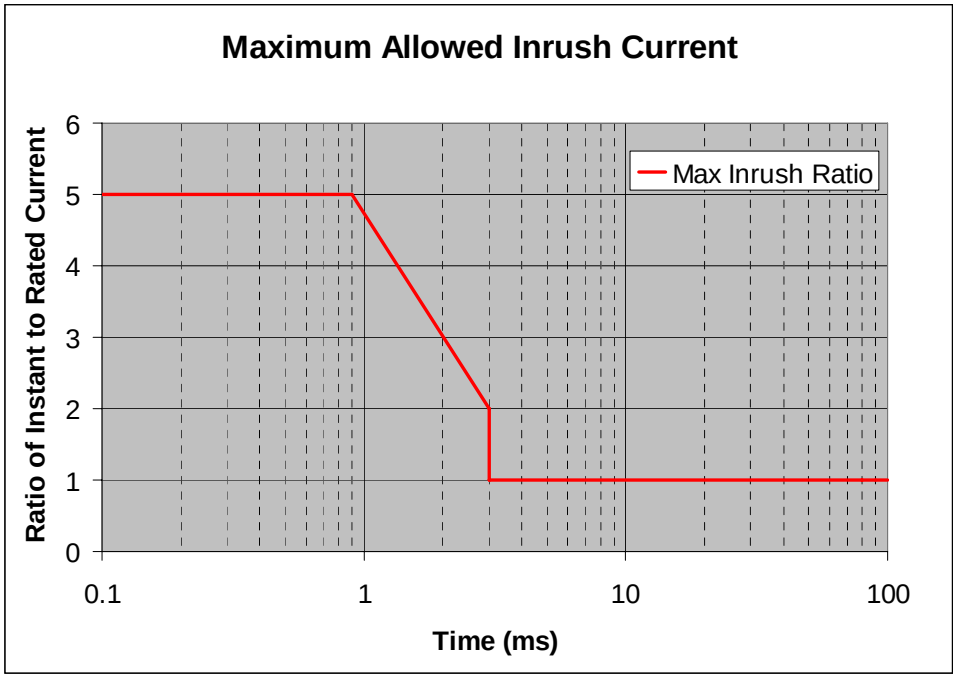

4.8.1.5 Conducted emissions on the power feeds

¶ 203 The electrical noise fed from the MicroTCA equipment into its input power source must be limited to prevent interference with other equipment sharing the same power plant and distribution system.

¶ 204 The intent in establishing Class B compliance for the Power Module is to facilitate Class A compliance in a system that utilizes multiple Power Modules (up to four PMs in a 3+1 redundant configuration). It is not the intent to design additional margin on top of Class B levels. Systems requiring Class B would be expected to utilize additional external filtering.

Requirements

REQ 4.240 The Power Module described in this section **should** comply with EN 300 386, as well as Telcordia GR-1089 Class B levels (see Section 8).

REQ 4.241 The conducted common-mode current emissions from a MicroTCA system into the DC battery feeds **should not** exceed the specifications given in Telcordia GR-1089-CORE ETS 300 386, CISPR 22, and EN55022. An average detector shall be used to measure frequencies below 150 kHz. A quasi-peak detector shall be used for frequencies above 150 kHz.

Property of CERN - For Internal Use Only – External Distribution Prohibited

4.8.1.6 Power lead conducted immunity

Requirement

REQ 4.242 The Power Module described in this section **should** meet the relevant immunity requirements of EN 300 386 and Telcordia GR-1089.

4.8.1.7 Differential mode transients

¶ 205 The standards used to specify the voltage transient characteristics include ANSI T1.315 and AT&T Network Equipment Development Standards (NEDS) requirements, described in PICMG3.0 Table 4-4. These specifications are defined for a –48 V DC system. For systems operating from +24 V DC feeds, the transient voltages stated in this section can be divided in half (time scale remains the same). A differential mode transient is applied to –48 V DC feed (between –48 V and battery return). The standards specify the voltage at the input of the Power Subsystem.

¶ 206 Voltage transients may occur at interface “A”, which is the input to the MicroTCA equipment (see Figure 4-13), as a consequence of faults in the –48 V DC power distribution. This may be thought of as “the end of the power cable as it enters the Frame.”

¶ 207 Figure 4-17 shows one such defined voltage transient. This voltage waveform is caused by a short circuit in the input power distribution system. The nominal voltage is 50 V.

- When the short circuit occurs, the input voltage falls. It will drop to 5 V for a period of 10 ms.
- During this 10 ms, the input fuse upstream of the short circuit blows.
- Because of high energy stored in the power cable inductance, the input voltage shoots up to 100 V in very short period of time (5 µs).
- The input voltage falls to 75 V quickly (in about 50 µs) and rings around 75 V for 10 ms (in real system).
- The input voltage will gradually recover to 50 V.

Note: The voltage levels and time duration quoted above are only estimates. In real fuse blowing event, depending on fault conditions and system configuration, the input voltage could drop to anywhere from 0 to 40 V (instead of 5 V) and the period could be from 1 ms to 50 ms.

Requirement

REQ 4.243 The MicroTCA system **should** provide continuous operation in the presence of the applicable differential mode transients. Various transient specs are outlined in this section.

Property of CERN - For Internal Use Only – External Distribution Prohibited

Figure 4-17 Input voltage transient defined by ANSI T1.315

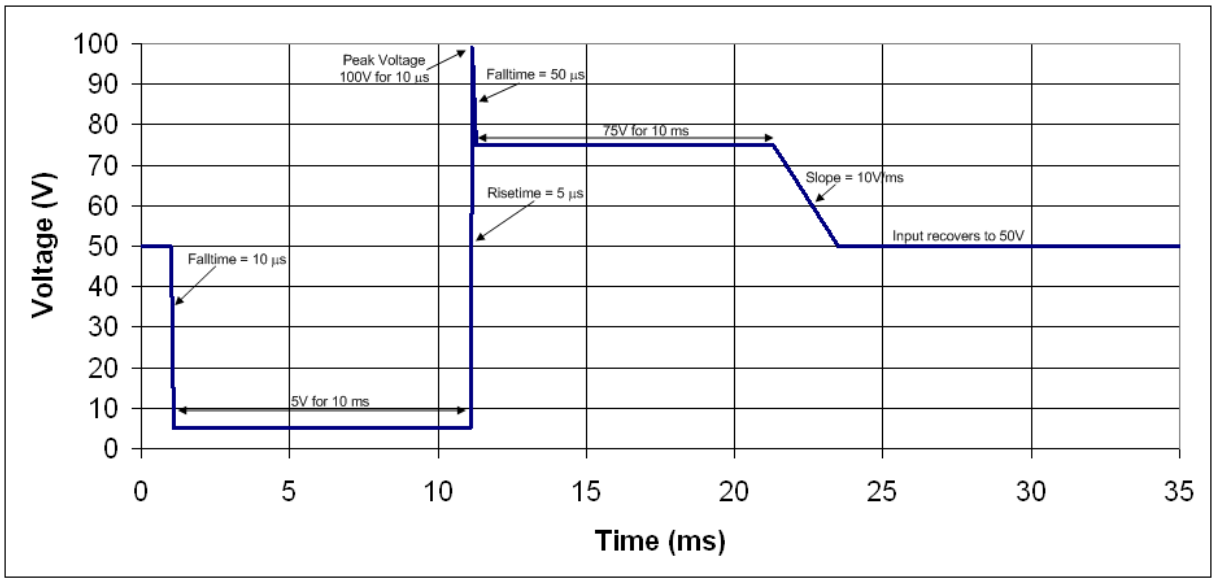

4.8.1.8 Transients in high ohmic distribution systems

¶ 208 For a TS-HOD arrangement, these transients are characterized by a voltage drop down to not less than –40.5 V DC, followed by an overvoltage in excess of the maximum steady state abnormal service voltage range (–60 V DC). The energy of the transient is maximum 2 J.

- Test voltage: Line to Ground –800 V
- Source impedance: 2 ohm
- Test method: IEC 61000-4-5

Note: The requirement originates from ETSI ETR 283. The test generator specified in ETSI ETR 283 is not yet commercially available. Test using the method according to IEC 61000-4-5 and a test voltage of –800 V corresponds to the test specified in ETSI ETR 283.

Requirement

REQ 4.244 Equipment intended for use in high ohmic distribution systems **should** operate without any functional disturbances during the test outlined in this section.

4.8.1.9 Electrical Fast Transients

Requirement

REQ 4.245 MicroTCA systems **should** demonstrate immunity to an Electrical Fast Transient (EFT).

Property of CERN - For Internal Use Only – External Distribution Prohibited

¶ 209 An EFT consists of repetitive bursts of low energy, high voltage pulses, and can be either common mode or differential mode. System requirements are specified in IEC 61000-4-4 and EN 55024. EFT is defined by two aspects: One is a detailed waveform, and the other is repetitive pattern. The EFT impulses have a peak voltage of 4k V and a pulse width of approximately 100 ns.

¶ 210 Figure 4-18 shows the repetitive pattern of an EFT.

Figure 4-18 Repetitive graph of an EFT

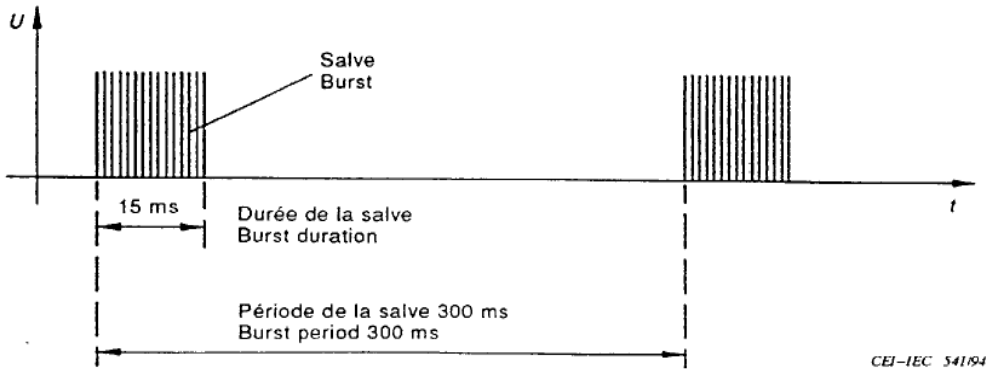

¶ 211 The detailed waveform of the burst period is shown in Figure 4-19.

Figure 4-19 Detailed waveform of an EFT burst period

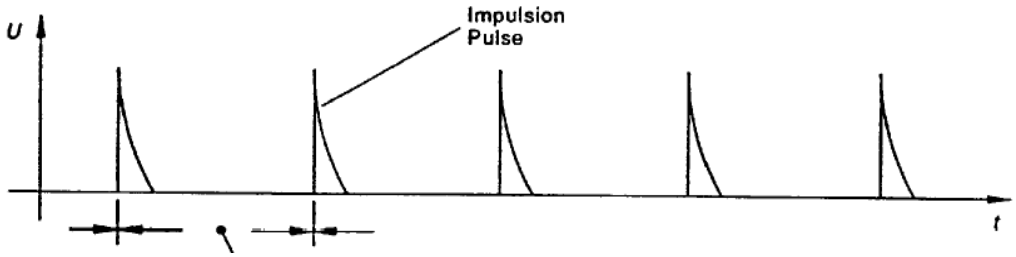

4.8.1.10 Surge

Requirement

REQ 4.246 MicroTCA systems **should** demonstrate immunity to electrical surges as described in EN55024.

4.8.1.11 Input isolation

¶ 212 Minimum Creepage and clearance isolation gaps are detailed in IEC-60950-1.

Requirement

REQ 4.247 Basic isolation **shall** be maintained between primary and secondary voltages.

Property of CERN - For Internal Use Only – External Distribution Prohibited

4.8.1.12 DC power feed voltage specifications

¶ 213 The voltage levels for -48 VDC systems are based on voltages at point “A” with an allowance for an additional 1.0 volt drop for fusing and cabinet power distribution. Some reduction in services or capabilities is allowed in the degraded operating voltage range. Typically, the equipment is not required to operate during the non-operating ranges listed below, although some systems might require operation over wider ranges. The equipment must be able to restart operation after operating voltages are re-established.

Requirement

REQ 4.248 MicroTCA systems **shall** support operation within the voltage ranges listed in Table 4-3.

Table 4-3 Shelf-level DC voltage requirements

	-48 VDC Feeds	-48 VDC/-60 VDC Feeds	+24 VDC Feeds
Nominal operating voltage	-48 VDC	-60 VDC	+24 VDC
Maximum operating voltage	-57 VDC	-72 VDC	+32 VDC
Minimum operating voltage	-44 VDC	-44 VDC	21.7 VDC
Degraded operating voltage	-39.5 VDC to -44 VDC	-39.5 VDC to -44 VDC	+18.7 VDC to +21.7 VDC
Non-operating voltages with no equipment damage	0 VDC to -40.5 VDC, -57 VDC to -60 VDC	0 VDC to -40.5 VDC, -72 VDC to -75 VDC	0 VDC to +18.7 VDC, +32 VDC to +36 VDC

REQ 4.249 MicroTCA systems **may** support operation beyond the voltage ranges listed in Table 4-3.

4.8.2 AC power feeds

4.8.2.1 Power distribution and over current protection

Requirement

REQ 4.250 Each of the AC mains used to supply a MicroTCA Shelf or sub-Shelf **shall** have dedicated over current protection, as specified in IEC-60950-1. The feed must connect to the front panel of the power conversion Module using an industry standard connection. For systems with two power conversion Modules, the Modules may be powered from inputs with separate breakers to provide full redundancy. If full redundancy is not required and power consumption permits, feeds from a common breaker can be connected to both power conversion Modules. See Figure 4-20 for the different AC distribution options.

Property of CERN - For Internal Use Only – External Distribution Prohibited

Figure 4-20 AC power distribution options

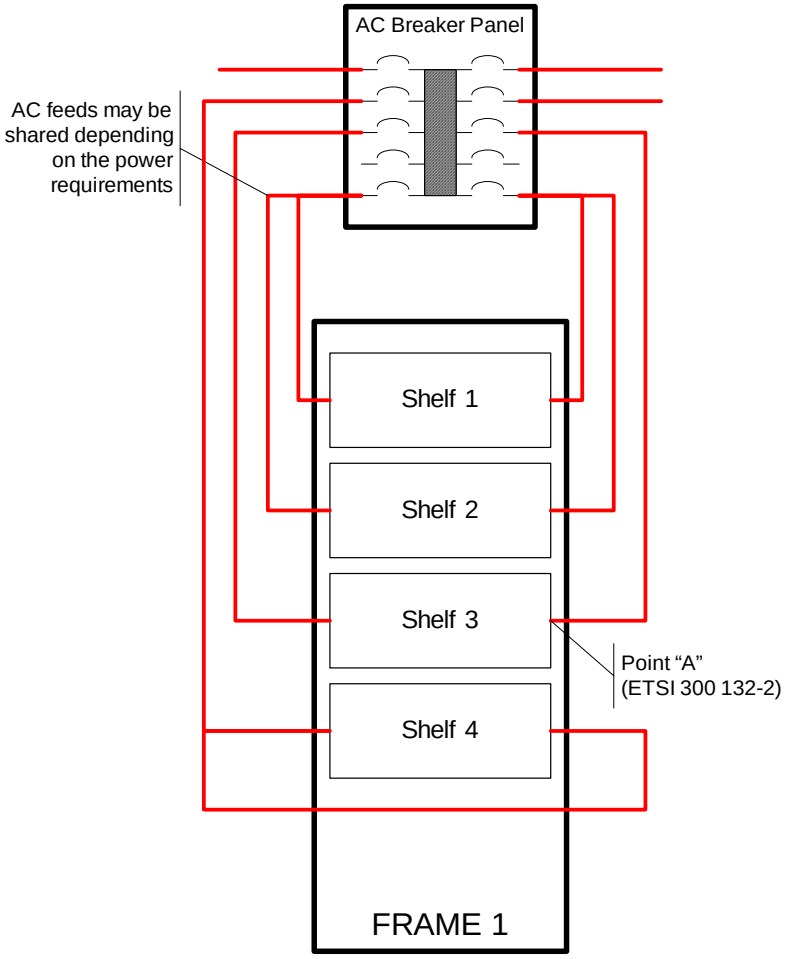

4.8.2.2 AC isolation

Requirement

REQ 4.251 The AC feeds **shall** be isolated from any DC Ground in the MicroTCA system, as specified in IEC-60950-1, including but not limited to maintaining suitable Creepages and clearances.

4.8.2.3 Power factor and AC distortion

Requirement

REQ 4.252 MicroTCA systems powered with AC feeds **shall** meet the harmonic current limits given in IEC-61000-3-2.

Property of CERN - For Internal Use Only – External Distribution Prohibited

¶ 214 Table 4-4, for reference only, provides examples of harmonic current limits.

Table 4-4 Harmonic current limits for Class A equipment

Harmonic Order, n	Maximum permissible harmonic current, A
Odd harmonics	
3	2.3
5	1.14
7	0.77
9	0.40
11	0.33
13	0.21
$15 \leq n \leq 39$	0.15 * 15/n
Even harmonics	
2	1.08
4	0.43
6	0.30
$8 \leq n \leq 40$	0.23 * 8/n

4.8.2.4 AC voltage fluctuations

Requirements

REQ 4.253 MicroTCA system **should** meet the requirements of 61000-3-3.

REQ 4.254 The operation of a MicroTCA system **should not** be interrupted during the loss of AC power for less than 20 ms. This equates to a dropout of one AC cycle at a frequency of 50 Hz.

4.8.2.5 Conducted emissions

¶ 215 The design of the power supply should not impede system compliance with the various regulatory agencies.

¶ 216 For example, the electrical noise fed back from the MicroTCA equipment into the AC power source is limited by standards and regulations to prevent interference to other equipment sharing the same distribution system.

Requirements

REQ 4.255 Conducted emissions from the MicroTCA system into low-voltage AC public utility power lines **shall not** exceed the levels given in Telcordia GR-1089-CORE, FCC, and CISPR 22.

REQ 4.256 Conducted common-mode emissions from the MicroTCA system into low-voltage AC public utility power lines **shall not** exceed the levels from GR-1089 given in Table 4-5.

Property of CERN - For Internal Use Only – External Distribution Prohibited

An average detector shall be used to measure frequencies below 150k Hz. A quasi-peak detector shall be used for frequencies above 150k Hz.

Table 4-5 Conducted emission requirements AC power leads—current

Frequency (MHz)	Maximum Line Current (dBμA)
0.01 to 0.27	79
0.27 to 0.8	67.6 – 20 $\log_{10}$ f
0.8 to 30	69.5

¶ 217 The lowest frequency of measurement shall be at least 10% lower than the lowest clock/oscillator frequency (but not less than 10k Hz). The lowest clock/oscillator includes all components in the MicroTCA system (i.e. switching power supplies). The conducted common-mode emission limits are plotted in Figure 4-21.

Figure 4-21 Limits for conducted emissions on AC power leads

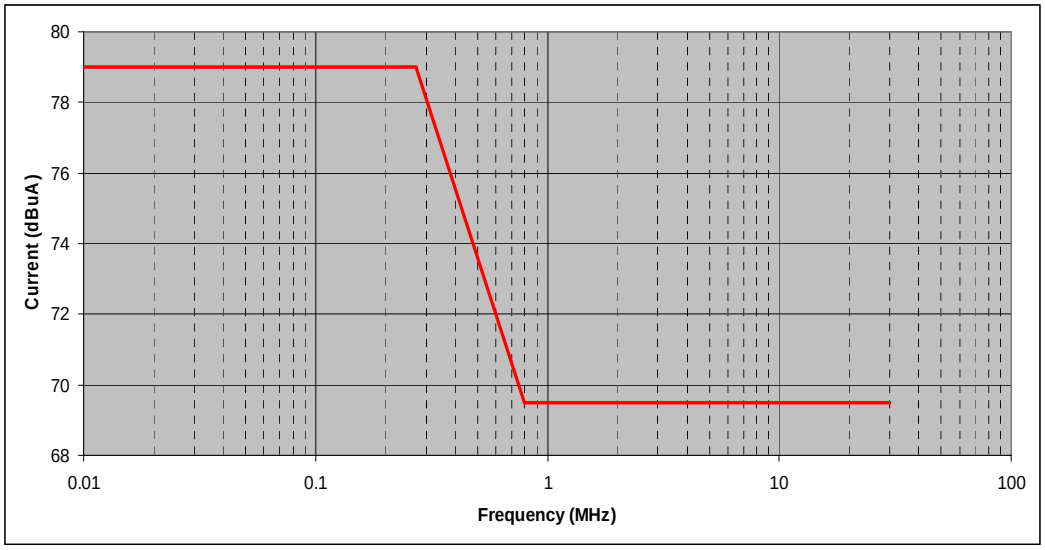

4.8.2.6 Conducted immunity

Requirement

REQ 4.257 A MicroTCA system **shall** conform to the noise immunity standards outlined in Telcordia GR-1089-CORE and CISPR 24. GR-1089 specifies conducted immunity for power leads in terms of noise current impinging upon the input power terminals of a

Property of CERN - For Internal Use Only – External Distribution Prohibited

Shelf of equipment. Table 4-6 defines the calibration limits. The values for immunity are 10 dB higher than the allowable conducted emission levels.

Table 4-6 AC conducted immunity requirements

Frequency (MHz)	Minimum Calibration Line Current (dBμArms)
0.01 to 0.27	89
0.27 to 0.8	77.6 — 20 log10 f
0.8 to 30	79.5

4.8.2.7 100 V AC, 120 V AC, and 230 V AC power distribution

Requirement

REQ 4.258 A MicroTCA system with an AC Power Module **should** be capable of accepting any of the voltage ranges in Table 4-7.

¶ 218 Feeds will be terminated on the front panel of the Module using standard non-detachable plug, as defined in IEC-60950-1. The Module will provide filtering and protection while generating appropriate Management Power and Payload Power for the MicroTCA Shelf.

4.8.2.8 Electrical Fast Transients

Requirement

REQ 4.259 MicroTCA systems **should** demonstrate immunity to an Electrical Fast Transient (EFT).

¶ 219 An EFT consists of repetitive bursts of low energy, high voltage pulses, and can be either common mode or differential mode. System requirements are specified in EN 61000-4-4, and EN 55024. EFT is defined by two aspects: One is a detailed waveform, and the other is repetitive pattern. The EFT impulses have a peak voltage of 4k V and a pulse width of approximately 100 ns.

¶ 220 Figure 4-18 shows the repetitive pattern of an EFT.

4.8.2.9 Surge

Requirement

REQ 4.260 MicroTCA Power Subsystems **should** demonstrate immunity to electrical surges as described in EN55024.

4.8.2.10 AC power feed voltage specifications

Requirement

REQ 4.261 A MicroTCA Power Subsystem operating from AC feeds **should** meet the criteria outlined in Table 4-7.

Property of CERN - For Internal Use Only – External Distribution Prohibited

¶ 221 These operating voltages are measured at “A” (see Figure 4-20) which is the input to the telecommunications equipment. This may be thought of as “the end of the power cable as it enters the Frame.” The equipment is not required to operate during the non-operating ranges listed above, but the equipment must be able to restart operation after operating voltages are re-established.

Table 4-7 Shelf-level AC voltage requirements

	100 VAC Mains	120 VAC Mains	230 VAC Mains	Universal
Normal operating voltage	85 – 110 VRMS	102 – 132 VRMS	187 – 265 VRMS	85 – 265 VRMS
Maximum operating voltage	110 VRMS	132 VRMS	265 VRMS	265 VRMS
Minimum operating voltage	85 VRMS	102 VRMS	187 VRMS	85 VRMS
Degraded operating voltage	N/A	N/A	N/A	N/A
Non-operating voltages with no equipment damage	0 – 85 VRMS	0 – 102 VRMS	0 – 187 VRMS	0 – 85 VRMS
Frequency	47 – 63 Hz	47 – 63 Hz	47 – 63 Hz	47 – 63 Hz

4.9 References

¶ 222 The following table lists applicable specifications and standards related to the power design concerns of MicroTCA. Further regulatory and customer compliance may be required. Please refer to Section 8.

Table 4-8 Power references

Specification or Standards Body	Specification or Standard	Section or Part	Description	Note
ITU	ITU-T K.27		Bonding Configurations and Earthing inside a Telecommunications Building	ITU = International Telecommunications Union
IEC	IEC/EN 60950-1 CSA/UL 60950-1		Information Technology Equipment- Safety - Part 1: General Requirements.	IEC = International Electrotechnical Commission
	IEC 61000-3-2		Regulatory in Europe for AC Line Harmonics	
	IEC 61000-3-3		Regulatory in Europe for AC Voltage Fluctuations	
	IEC 61000-4-4		Test method called out by most EMC standards for AC and DC power leads Electrical Fast Transients	
	IEC 61000-4-5		Test method for differential mode voltage transients. Surge, Lightning test method called out by most EMC standards (except GR-1089). Applicable to outdoor cables, AC cables and some DC cables	
	IEC 61000-4-6		Test method for conducted Immunity	

Property of CERN - For Internal Use Only – External Distribution Prohibited

Table 4-8 Power references (continued)

Specification or Standards Body	Specification or Standard	Section or Part	Description	Note
EN	EN 55022		Radiated and Conducted Emissions regulatory standard Applicable to ITE equipment.	EN = European Norm
	EN 55024	Table 3	Conducted Immunity input DC lines	
		Table 4	Conducted Immunity Input AC lines	
			Electrical Fast Transients	
			Electrical Surge	
	EN 61000-3-2		AC Line Harmonics	
	EN 61000-3-3		AC Voltage Fluctuations	
ETS	ETS 300 132-2	Part 2	Environmental Engineering (EE); Power supply interface at the input to telecommunications equipment; Part 2: Operated by direct current (dc).	ETS (ETSI) = European Telecommunication Standard
	ETS 300 132-3	Part 3	Equipment Engineering (EE); Power supply interface at the input to telecommunications equipment; Part 3: Operated by rectified current source or direct current source up to 400V. For AC supplies	
	EN 300 386		Conducted Emissions; Calls up EN 55022 EN 61000-3-2, EN 61000-3-3 and similar to EN 55024	
	ETR 283		Test method for differential mode voltage transients	
ANSI	T1.315		Differential Mode Transients	
AT&T	NEDS	Section 1.2	Differential Mode Transients	
SBC	SBC-TP-76200	Section 2	EMC	
		Section 7	DC power. Differential Mode Transients	
FCC		Part 15	Conducted / Radiated Emission	
CISPR	CISPR 22		Conducted / Radiated Emissions	
	CISPR 24		Conducted Immunity. Similar to EN 55024 and EN 300 386	
Telcordia	GR-1089-CORE	Section 2	ESD	
		Section 3	EMC Conducted Emissions and Immunity	
		Section 4	Lightning and power fault	
		Section 7	Safety	
		Section 9	Bonding and Grounding	

Property of CERN - For Internal Use Only – External Distribution Prohibited

Property of CERN - For Internal Use Only – External Distribution Prohibited

Thermal 5

5.1 Overview

¶ 1 This section provides information to designers, manufacturers, integrators, and users of MicroTCA.0 to facilitate interoperability among the many components that must work together for a successful thermal solution. MicroTCA may implement a Shelf, Cube, or Pico solution.

¶ 2 The thermal requirement for AdvancedMC Modules is defined in the PICMG® AMC.0 Advanced Mezzanine Card Base Specification, Section 5 “Thermal”. However, MicroTCA solutions act as an alternative Carrier (as defined in AMC.0) for AdvancedMC Modules, yet may be configured into many application-specific design solutions. Their compliance with thermal requirements must meet or exceed that which is defined for AMC.0.

¶ 3 This specification provides simple MicroTCA thermal test guidelines. However, the system integrator will have the ultimate responsibility to ensure that all components meet the thermal requirements for MicroTCA.

Note: The thermal guidelines in this specification only apply to (forced) air cooling. Since power consumption can be more or less than power dissipation, depending upon if energy is received or sent out of face plate-connected cables, this section defines power dissipation, not power consumption.

5.2 AMC.0 Modules and MicroTCA

¶ 4 The PICMG® Advanced Mezzanine Card (AdvancedMC) specification defines the base-level requirements for a wide range of high-speed mezzanine cards optimized for, but not limited to, AdvancedTCA® Carriers (see PIMG Advanced Mezzanine Card AMC.0 Specification, Section 1). Further, the MicroTCA specification complies with the common elements for each implementation, including mechanical, power, thermal, and interconnect.

Requirement

REQ 5.1 For MicroTCA functionality, other functional Modules, such as Power Unit Modules and/or MicroTCA Carrier Hubs, may be required. Such Modules **shall** comply with the Module power dissipation limitations, as defined in Section 5.6.

5.3 AMC.0 Carriers and MicroTCA

¶ 5 The MicroTCA thermal requirements are similar to the AMC.0 Carrier thermal requirements. See AMC.0 Sections 5.3.1 and 5.4.

Property of CERN - For Internal Use Only – External Distribution Prohibited

Requirements

REQ 5.2 The Subrack/Shelf/Cube/Pico documentation **shall** include a table or a calibrated graph describing the Slot airflow impedance from 10 to 50 CFM (see Figure 5-3).

REQ 5.3 The uniformity of airflow path's resistance on the bottom of a Slot **should** provide on A, B, C, and D zones a value equal to approximately 25% of the total value of the four regions, as depicted in Figure 5-2.

REQ 5.4 The system integrator **shall** guarantee that the temperature rise of the air from inlet-to-exhaust of the Slot assembled with any combination of Modules does not exceed 10 ºC for the complete Shelf, Cube, or Pico assembly.

5.4 Subrack Slot

¶ 6 The Subrack is divided into Slots. Each Slot is a receptacle for an AMC.0 Module. Over its (19 in.) width, a typical MicroTCA 19-in. based Subrack/Shelf can contain up to 29 Half-Height Slots or 14 Full-Height Slots in a single or multiple Tier. A Cube or Pico system can contain one or more Slots.

Requirement

REQ 5.5 Air distribution in a single Slot or in each Slot in a Subrack **shall be** as shown in Section 5.8.

Figure 5-1 Subrack Slot in the MicroTCA grid

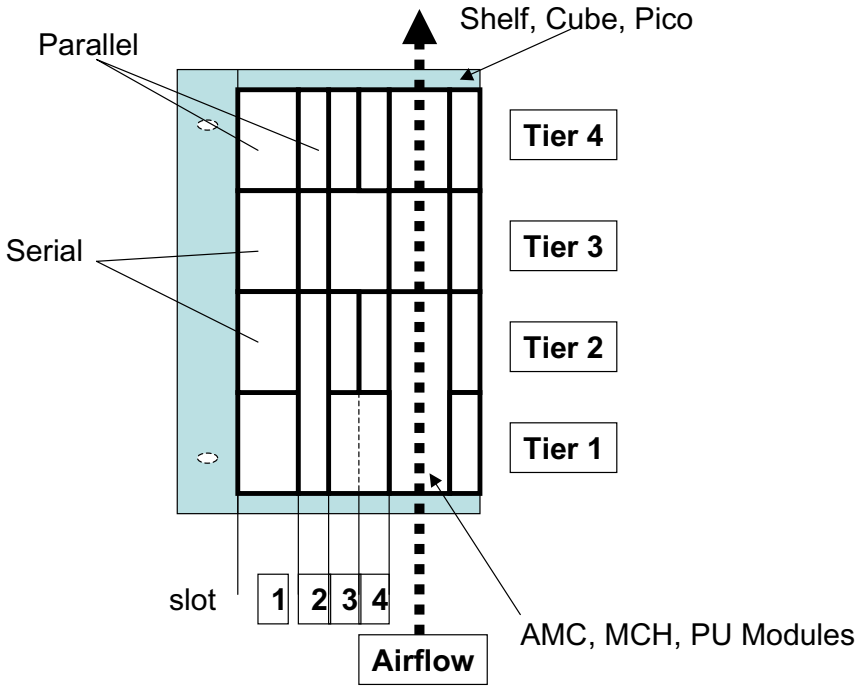

Property of CERN - For Internal Use Only – External Distribution Prohibited

5.5 Airflow path

¶ 7 The airflow path for AdvancedMC Modules is defined in AMC.0. Depending on the configuration of the Slots and the installed AdvancedMCs, MCHs, and PSUs, the power dissipation may be unbalanced. Figure 5-1 shows the parallel and/or serial airflow path condition which can occur in a MicroTCA Shelf, Cube, or Pico system.

¶ 8 A MicroTCA Shelf, Cube, or Pico (as explained in Section 1.3) develops essentially the same pressure across each Module Slot, both high and low power. The airflow through each Module, however, will be different depending on the Module airflow impedance.

¶ 9 In a Tier 1 75 mm or a Tier 1/Tier 2 150 mm Shelf (allowing for 150 mm Modules only), Cube, or Pico where multiple Modules reside side-by-side only, the individual Slot airflow is considered in parallel.

¶ 10 In a Tier 1/Tier 2 (Tier 3, etc.) Shelf, Cube, or Pico where multiple Modules reside above each other, the individual Slot airflow is considered in series.

¶ 11 In a Tier 1/Tier 2 (Tier 3, etc.) Shelf, Cube, or Pico where multiple Modules reside side-by-side and above each other in any mix, the individual Slot airflow requires to be tuned by adding/adjusting airflow baffles on the Modules.

Requirement

REQ 5.6 The MicroTCA Shelf, Cube, or Pico, however, **shall** provide an equally balanced (within 5%) airflow resource to each Slot. As Slots assembled with individual AdvancedMCs/MCHs/PUs may be mixed in a MicroTCA System, in some cases, AdvancedMC/MCH/PU Module baffles are required to force the airflow to remain in range, despite high airflow resistance.

5.6 AMC.0 Modules and power dissipation

¶ 12 There are currently four different AMC.0 Module physical sizes. The largest size, Double-Width/Full-Height, operates at a maximum of 80 Watts power dissipation. The Double-Width/Half-Height and Single-Width/Full-Height sizes operate at half that value, a maximum 40 Watts. The smallest, Single-Width/Half-Height, operates at a maximum of 20 Watts power dissipation.

Property of CERN - For Internal Use Only – External Distribution Prohibited

Table 5-1 AMC.0 Module power and 19 in. Subrack cooling requirements

AMC.0 Module Power			MicroTCA 19inch Subrack cooling requirements			
Width	Height	Watts/each	1 Tier Slots	Watts	2 Tier Slots	Watts
Single	Half	20	29	580	58	1160
Single	Full	40	14	560	28	1120
Double	Half	40			58	1160
Double	Full	80			28	1120

5.7 MicroTCA system cooling configuration

¶ 13 Some examples of MicroTCA cooling configurations include:

- A Subrack plus a separate Cooling Unit (CU)
- A Shelf with an integrated CU
- A Cube with a separate CU
- A Cube with an integrated CU
- A Pico with provision for cooling

Note: Figure 5-2 “Inlet airflow distribution for a single Slot” applies, regardless of the configuration.

5.8 Air distribution in a Slot

¶ 14 In any Slot within the Subrack, the recommended inlet air distribution is shown in Figure 5-2.

Requirements

REQ 5.7 The Shelf/Cube/Pico **should** distribute the incoming air equally (25% ±5%), from front-to-back at the bottom of the Slot.

REQ 5.8 To permit AdvancedMC, MCH, and PM designers to direct air to critical components located anywhere on the Board, the Shelf/Cube/Pico **should** allow the exhaust air to have the ability to exit from the top of the Slot uniformly through any of the four zones.

REQ 5.9 Additionally, the Shelf/Cube/Pico **should** allow the exhaust air to have the ability to exit from the top of the Slot for any distribution of the four regions. The ability to facilitate interoperability is maximized by providing a Slot with equal distribution of incoming air, permitting the flexibility to Channel the air at the Board level and allowing air to exit the Slot with a variety of distribution possibilities.

Property of CERN - For Internal Use Only – External Distribution Prohibited

Figure 5-2 Inlet airflow distribution for a single Slot

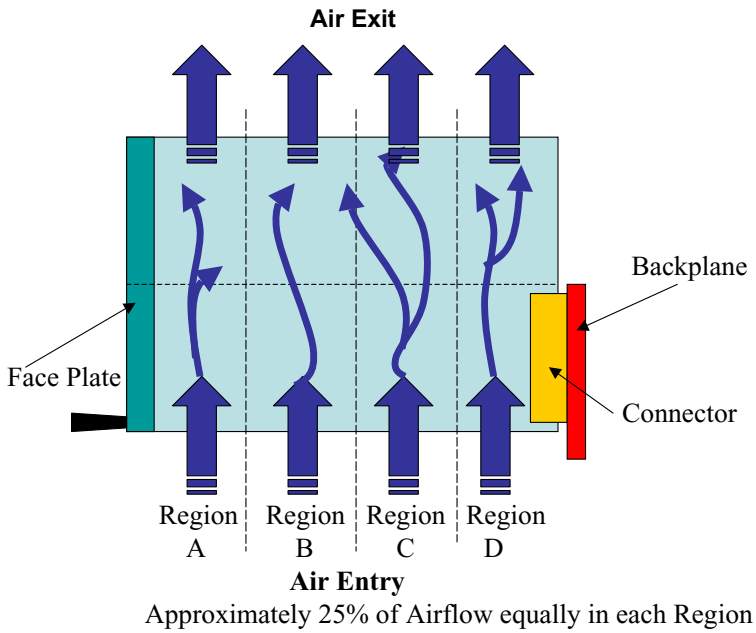

5.9 Air inlet and exhaust

¶ 15 The airflow path through a MicroTCA System may vary (see Section 5.27):

- Front air entry – Rear air exit (preferred for a self-contained Shelf or Cube, installed outside the 300 mm cabinet environment)
- Bottom air entry – Top air exit
- Front air entry – Side/rear air exit
- Side-to-side (right-to-left) is permissible, if acceptable by the end user

Requirement

REQ 5.10 The system integrator **shall** ensure that the airflow through the MicroTCA system and all installed AdvancedMCs, MicroTCA Carrier Hubs, and Power Modules ensures the required operational temperatures of the installed components in the defined environment.

5.10 Slot cooling capability

¶ 16 The airflow through the MicroTCA Slot has to work against the resistance incurred by the formations of the AMC.0 Modules. See AMC.0 Section 5.3 Figure 5-2.

Property of CERN - For Internal Use Only – External Distribution Prohibited

Figure 5-3 Airflow impedance

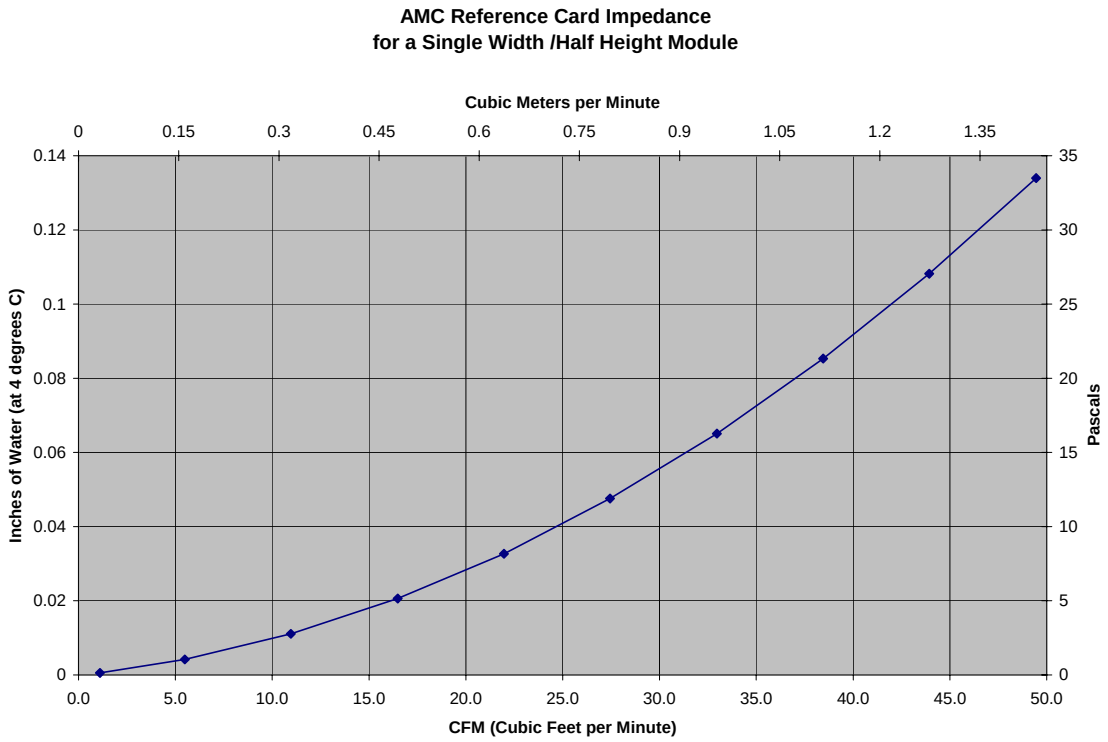

Requirements

REQ 5.11 The Slot cooling capability **shall** be provided by the system manufacturer, in terms of the Slot impedance curve and the Slot fan flow curve for each Slot.

REQ 5.12 The Slot impedance curve and the Slot fan flow curve **shall** be supplied in both metric (Pa, m^3/min.) and English units (Inches of H_2O, $ft.^3$/min.) and **shall** be part of the documentation included with the MicroTCA system.

REQ 5.13 To ensure consistent cooling performance across all Slots within the system, Slots not populated with Modules **shall** incorporate an air blocking device that increases the airflow impedance of that Slot. Airflow management filler panels installed in empty Slots satisfy these requirements.

5.11 Module cooling requirements

Requirement

REQ 5.14 Module cooling requirements **shall** be specified by the Module manufacturer, in terms of the volumetric airflow rate required to meet maximum allowed temperature rise across the Module at the operating condition of maximum power dissipation and maximum inlet operating temperature.

Property of CERN - For Internal Use Only – External Distribution Prohibited

5.12 Standard air

¶ 17 Section 5.2, "AMC.0 Modules and MicroTCA" requires the use of "standard air" to ensure that cooling requirements can be standardized. PICMG "standard air" is based on the use of the aviation industry definition of Standard Atmosphere. The aviation definition uses dry air at a temperature of 15 °C. PICMG mandates a temperature of 26 °C and 50% humidity to align with common practice and industry expectations.

¶ 18 Using an agreed standard air for the preparation of board and Shelf flow and pressure means that curves can be used from various vendors for comparison and analysis.

¶ 19 Section 5.12.1 gives the derivation of standard air.

5.12.1 Derivation

¶ 20 In order to meet the safety requirements of the aviation industry, a definition was put together to harmonize different national standards into a single definition of a standard atmosphere. This is now defined as ISO 2533:1975. This defines a mix of the various gasses making up what we loosely call air. It excludes water vapor. It defines standard atmosphere as occurring at a temperature of 15 °C.

¶ 21 Electronic equipment operates at a higher temperature than 15 °C, and normal air usually includes water vapor; so for this specification, we require standard air to be at 26 °C and 50% humidity (at 26 °C). As relative humidity varies with temperature, even with the same amount of water vapor, the humidity is defined as water vapor pressure of 16,800 Pa (Pascal).

Requirement

REQ 5.15 The following parameters pertain and **shall** be based on this definition:

Absolute pressure101,325 Pa
Water vapor pressure16,800 Pa

(Humidity 50% at 29.15 °C, see note above)

Temperature299.15 °K (26 °C)
Density1.2225 kg/m^3
Specific heat1,005 J/kg

Note: A relative humidity at 50% is only relevant at a given temperature. As air is heated or cooled, the vapor content will remain constant, but the relative humidity will vary considerably. Water vapor pressure is a far better and more realistic value.

5.12.2 Barometric changes due to weather

¶ 22 Standard air is defined at sea level with a specific barometric pressure. This pressure changes as a result of wether conditions, as well as altitude. The standard pressure is 101,325 Pa. Actual pressures can vary from 85,000 Pa to 105,000 Pa. This gives rise to density changes. However, low pressure, which reduces density, is characterized by low temperatures. Warm weather provides the needed higher density.

Property of CERN - For Internal Use Only – External Distribution Prohibited

¶ 23 The changes are smaller and when taken on their own, only contribute a variance of about 10%.

Requirement

REQ 5.16 The standard pressure **shall** be 101,325 Pa.

5.13 Slot impedance curve

¶ 24 The Shelf/Cube/Pico manufacturer has to determine the pressure drop versus volumetric airflow rate curve or the Slot impedance curve for each empty Slot within the Shelf/Cube over the intended operating range and filter contamination condition (see Section 5.16) and provide the impedance curve for each Slot. The Slot impedance curve can be determined by analysis, simulation, or empirical testing.

Requirements

REQ 5.17 The Slot impedance curves **shall** be supplied in both metric (Pa, m^3/min.) and English units (inches of H_2O, $ft.^3$/min.).

REQ 5.18 The Slot impedance curve **shall** be included as part of the standard documentation.

5.14 Slot fan flow curve

¶ 25 The Shelf/Cube/Pico manufacturer determines the pressure drop versus volumetric airflow rate curve for the fan behavior or the Slot fan flow curve for each empty Slot within the Shelf over the intended operating range and filter contamination condition (see Section 5.16).

¶ 26 The Slot fan flow curve is determined by analysis, simulation, or empirical testing.

Requirement

REQ 5.19 The fan flow curve **shall** capture the various fan operating modes supported by the Shelf if they apply such as low-medium-high speed or fan failure.

5.15 Cooling Unit failure

Requirements

REQ 5.20 In systems which support redundancy, a forced air MicroTCA Shelf/Cube/Pico **shall** operate with a single Cooling Unit (CU) failure and continue operating under the specific thermal environment, as defined in Table 5-2 over the specified temperature range.

REQ 5.21 Systems that have single CUs, but achieve reliability through redundant air movers in a single CU, the MicroTCA Shelf/Cube/Pico **shall** operate with a single air mover failure.

Property of CERN - For Internal Use Only – External Distribution Prohibited

5.16 Filters

¶ 27 The use of filters requires an understanding of what a contaminated filter is. Different Cooling Units with different pressure drops react differently to the filter's contamination condition.

¶ 28 Filters may minimize the pressure drop to the system, while contributing to air straightening—that is, decrease turbulent airflow and maintain laminar air flow.

¶ 29 MicroTCA systems may have a provision for air filters. However, some installations specify air filters at the system level. Other installations rely on air filtering at the Frame level.

Requirement

REQ 5.22 The filter condition used for simulation and/or measured test reports **shall** be stated, and the maximum allowable filter contamination condition **shall** be stated as a percentage.

References

¶ 30 **NEBS GR-78-CORE, R8-3**: All fan cooled equipment **shall** be configured with filters.

¶ 31 **NEBS GR-78-CORE, R8-4**: All equipment fan filters **shall** have a minimum dust arrestance of 80%. This represents a low efficiency 10 to 15% American Society of Heating, Refrigerating, and Air-Conditioning Engineers (ASHREA) dust spot rating.

¶ 32 **NEBS GR-78-CORE, R8-5**: Fan filters **shall** have a minimum fire rating of UL900 Class 2.

¶ 33 **NEBS GR-63-CORE, R4-29**: Foamed polymers **shall** meet HF-1 requirements UL Standard 94, as per the paragraph titled Horizontal Burning Test for Classifying Foamed Materials 94 HBF, 94 HF-1, or 94 HF-2.

¶ 34 **EU-RoHS**: Compliance **shall** be required.

5.17 System sensors

¶ 35 The function of the system sensor is to establish the individual Shelf, Cube, Pico temperature rise. This information is vital for multiple Shelf applications in a rack. Ideally, these sensors are placed at the Shelf air intake before the filter and at the air exit.

¶ 36 In some cases, it is sufficient that the air intake is measured by making use of the already provided for sensors on the AdvancedMC, MCH, or PM Modules.

¶ 37 These sensors may be used to monitor room temperature, determine air temperature rise through the system, input to control fan speed, detect environmental faults, and input the Module power management policies during fault scenarios. These sensors need to be connected to IPMB and function per Section 3 requirements for sensors.

Requirements

REQ 5.23 A temperature sensor **shall** be provided in the system to measure the air inlet.

REQ 5.24 A temperature sensor **should** be provided in the system to measure the average system exhaust air.

Property of CERN - For Internal Use Only – External Distribution Prohibited

5.18 Thermal and operating environment

Requirement

REQ 5.25 The environmental class **shall** be met, as defined in **GR-63-CORE** (**Network Equipment Facilities)** and **Class 3.1** of **ETS 300 019-1-3 (Stationary Use, Weather Protected and Temperature Controlled Locations)**.

¶ 38 For convenience, common environmental protection information is listed in Table 5-2:

Table 5-2 Thermal and operating environment

Criteria:	ETSI:		NEBS Level 3:	
	Specification:	Reference:	Specification:	Reference:
Temperature	Storage: -25 to +55 °C, 0.5 °C/min change	ETS 300 019-2-1 ETS 300 019-2-2 ETS 300 019-2-3	Storage: -40 to +70 °C	GR-63-CORE, R4-7
	Trans: -40 to +70 °C, -40/+30 °C change		Operating: 5 °C to 40 °C Short Term: -5 to +55 °C for 96 h	
	Operating (Class 3.2): -5 to +45° C, 0.5 °C/min change		Operating change: 30 °C/h	
Humidity	Storage: 10% to 100% RH (non-condensing & condensing)	ETS 300 019-2-1 ETS 300 019-2-2 ETS 300 019-2-3	Storage 95% RH at 45 °C	GR-63-CORE, R4-7
	Trans slow change: 95% RH at 45 °C		Operating normal: 5% to 85% RH	
	Trans fast change: 95% RH at -40 °C to +30 °C		Operating short-term: 5% to 90% RH	
	Operating: 5% to 95% RH (non-condensing & condensing)			
Altitude	Altitude: -471 to 3708 m ASL	ETS 300 019-2-3	-60 to 1800 m ASL (no temp. derating)	GR-63-CORE, R4-8, R4-9, R4-10, R4-11, R4-12
			1800 to 4000 m ASL (temp. derating ok)	

5.19 Thermal and cabling

Requirement

REQ 5.26 Hot exhaust air, when blowing over cable, **shall not** exceed 75 ºC.

5.20 Simulation and impedance testing

¶ 39 The simulation reference Modules described are a generic representation to permit validation and comparison of Shelf, Cube, and Pico system designs.

Property of CERN - For Internal Use Only – External Distribution Prohibited

5.20.1 AdvancedMC/MCH reference Module

Requirements

REQ 5.27 For the purpose of comparing airflow simulation and impedance testing of competing MicroTCA system solutions, the following AMC.0 reference Module **shall** be used (see Figure 5-4):

Figure 5-4 Single-Width/Half-Height AdvancedMC/MCH reference Module

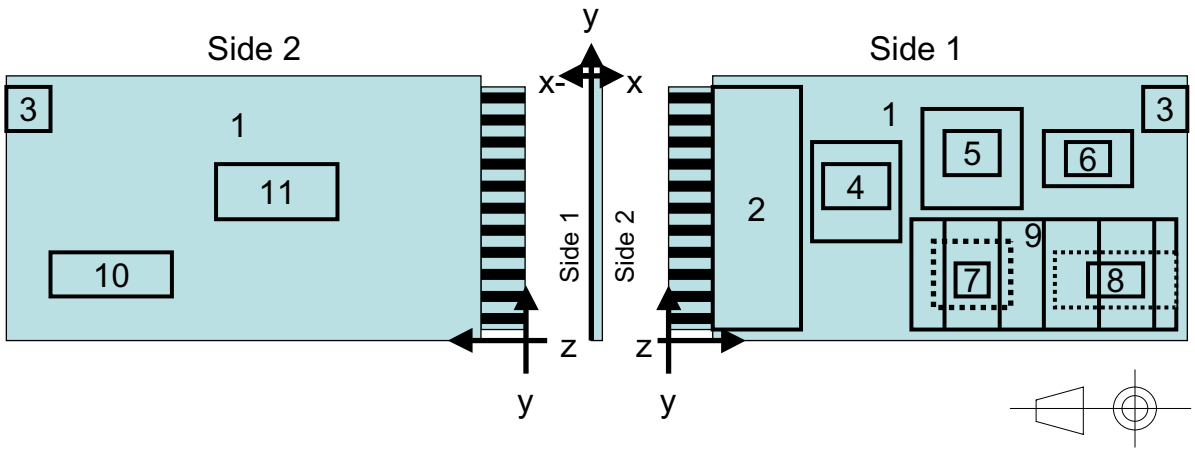

Table 5-3 Placement and dimensioning of components—AMC/MCH reference Module

Item	Description	Component Positioning			Component Size			Watts
		x Start	y Start	z Start	x Length	y Length	z Length	
1	PCB FR4	0.0	0.0	0.0	1.6	73.5	177.0	
2	Block	-6.0	2.5	2.0	6.0	68.5	33.0	5.0
3	RJ45	-7.0	55.0	160.0	11.5	15.0	19.0	
4	Chip 4	-2.2	25.0	38.0	2.2	35.0	35.0	2.4
5	Chip 1	-3.8	40.0	80.0	3.8	30.0	30.0	2.1
6	Chip 2	-1.6	40.0	120.0	1.6	20.0	30.0	0.5
7	CPU-Die	-3.6	14.5	139.0	1.2	10.0	11.0	10.0
	CPU-Package	-2.4	7.0	132.0	1.4	25.0	25.0	
	CPU-Balls	-1.0	7.0	132.0	1.0	25.0	25.0	
8	Memory 1	-2.0	5.0	70.0	2.0	12.0	50.0	
9	Heatsink	-7.7	2.0	75.0	4.1	35.0	95.0	
	Base				0.5			
	Fins				20 Fins @ 0.76			
10	Memory 2	1.6	19.0	120.0	1.2	12.0	50.0	
11	Chip 3	1.6	40.0	60.0	1.6	20.0	50.0	
	Total							20.0

Property of CERN - For Internal Use Only – External Distribution Prohibited

5.20.2 Power Unit reference Module

Requirements

REQ 5.28 For the purpose of comparing airflow simulation and impedance testing of competing MicroTCA system solutions, the following Power Unit (PU) reference Module **shall** be used (see Figure 5-5):

Figure 5-5 Single-Width/Full-Height Power Unit reference Module at 60W

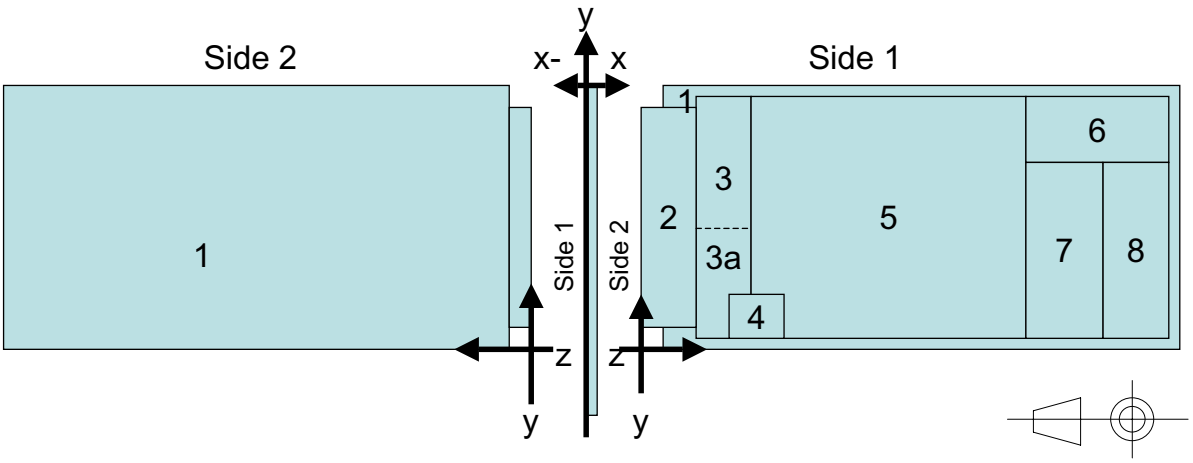

Table 5-4 Placement and dimensioning of components—Power Unit reference Module

Item	Description	Component Positioning			Component Size			Watts
		x Start	y Start	z Start	x Length	y Length	z Length	
1	PCB FR4	0.0	0.0	13.2	1.6	75.0	appx. 177.0	
2	Connector-Output	-22.1	>2.0	19.5	22.1	69.0	19.5	4.5
3	Channel Circuits	-3.0	36.5	38.5	3.0	69.0	19.0	1.8
3a	Channel Circuits	-3.0	2.0	38.5	3.0	69.0	19.0	1.8
4	3.3V Converter	-8.6	3.0	32.0	8.6	22.9	12.7	0.7
5	12V Converter	-11.4	7.3	38.5	11.4	58.4	76.2	31.0
6	EMI Filter	-17.8	45.5	114.5	17.8	25.4	63.5	6.5
7	EMI/Inrush/Oring	-19.0	2.0	114.5	19.0	50.8	38.0	12.5
8	Connector-Input	-19.0	43.5	152.5	19.0	69.0	25.4	4.2
	Total							63.0

5.21 Simulation environment

Requirement

REQ 5.29 For the purpose of comparing simulation results of competing MicroTCA system solutions, the following temperatures **shall** be used (see Section 5.20):

Property of CERN - For Internal Use Only – External Distribution Prohibited

- 45 ºC with no Cooling Unit (CU) failure
- 45 ºC with one CU failure
- 55 ºC with no CU failure
- With air filter (80% dust arrestant per GR-63-CORE)
- Without air filter
- Desired max AMC.0 Module component temperature 100 ºC
- Temperature rise not to exceed 15 ºC
- Standard Air

5.22 Thermal dynamic modeling

¶ 40 For simulations, Computational Fluid Dynamic (CFD) models of the 20 W Single-Width/ Half-Height AMC.0 Module and the 63 W Single-Width/Full-Height PU (see Section 5.18) will be available in:

- IcePack
- FlowTherm

¶ 41 Results have to be compared with actual testing.

5.23 Fluid networking modeling

¶ 42 Pressure/volumetric airflow curves are available from the AMC.0, MCH, power supply unit, Shelf, and Cube vendors (as required). You can use these curves to run multiple Module and/ or Module mix scenarios by using Fluid Network Modeling (FNM) at a lower cost. Results have to be compared with actual testing.

5.24 Acoustic noise

¶ 43 The use of *sound power level*, instead of emission *sound pressure level* as the specified quantity of product noise emission, has clear precedent within the international noise control community.

¶ 44 The limits contained herein apply only to the airborne acoustic noise generated during normal operation. That is, the limits do not apply when operating under emergency conditions or when the equipment is being serviced. Also, the limits do not apply to equipment features which produce sound as an intentional aspect of their operation.

Property of CERN - For Internal Use Only – External Distribution Prohibited

¶ 45 ATIS-0600005.200X “Acoustic Measurement” defines the Sound Power limits, as shown in Table 5-5 (see GR63 Section 4.6 Acoustic Noise update announcement):

Table 5-5 Limits for equipment used in temperature-controlled locations

ATIS-0600005.200X			ETS 300 753		
Environmental Description	Sound Power LWA Units (decibels)	Temperature, °C	Environmental Description	Sound Power LWA Units (decibels)	Temperature, °C
Class 1 Telecom. equipment room (unattended)	75	27	**Class 3.1** Telecom. equipment room (unattended)	75	23
Class 2 Telecom. equipment room (attended)	75	27	**Class 3.1** Telecom. equipment room (attended)	72	23
Power room	87	27	**Class 3.1** Power room	83	23

Requirements

REQ 5.30 The maximum acoustic level **should** be measured and reported if fan transition takes place between 23 °C and 27 °C.

REQ 5.31 Acoustic noise **shall** be recorded in sound power (bels) with all fans operating normally.

REQ 5.32 At an ambient temperature of **23 ºC** (ISO 7779), the system sound power level **should not** exceed LWAd 7.2 bels (attended equipment room).

REQ 5.33 At an ambient temperature of **23–27 ºC**, the system sound power level **should not** exceed LWAd 7.5 bels (attended equipment room).

¶ 46 Temperatures above 32.5 ºC require special attention, according to Occupational Exposure to Hot Environments (OSHA) and ISO 7933 (Hot Environments – Analytical Determination and Interpretation of Thermal Stress Using Calculation of Required Sweat Rate).

REQ 5.34 However, system noise **shall** be recorded and made available at 45 ºC and 55 ºC, where system noise **shall not** exceed 8.3 bels (except for audible alarm features).

5.25 Surface temperature

Requirement

REQ 5.35 MicroTCA equipment placed in a telecommunication environment **shall not** have hot exterior surfaces with which a crafts person can come into deliberate or accidental

Property of CERN - For Internal Use Only – External Distribution Prohibited

contact. This is to reduce the risk of injury to crafts people or the possibility of damage to equipment that could result in a service outage. See ATIS-0600004.200X.

Table 5-6 Temperature limits of touchable surfaces

Materials	Exposure Time °C				
	1 sec	4 sec	10 sec	10 min	8 hr
Uncoated Metal	65	58	55	48	43
Coated Metals	74	60	56	48	43
Plastics	85	74	70	48	43

(Reference: BS EN 13202:2000 and BS EN 563:1994)

Time	Contact
1 sec	Incidental/Accidental Contact (Contact that would cause unexpected reactionary or involuntary movements)
4 sec	Parts Held for Short Periods
10 sec	Parts Continuously Held in Normal Use
10 min	Prolonged Use
8 hr	Continuous Use

¶ 47 Thermal conductivity of materials may be used to evaluate and mitigate the surface temperature exposure risks.

5.26 Design recommendations

¶ 48 See Thermal Analysis Flow Chart, Figure 5-6.

¶ 49 Step 1:
Calculate the airflow impedance. In Steps 1A, 1B, and 1C, the various airflow paths are identified and the airflow impedance of each airflow path is determined. The airflow impedance of each airflow path is the series combination of the Module airflow impedance and the Slot impedance. The Module manufacturer is required to provide the Module airflow impedance (see AMC.0). This is done as pressure drops across the Module for a range of airflow rates. The system designer will provide the empty Slot impedance. Also, the power dissipation of each Slot is obtained. The optimal set of effective impedances for each airflow path would yield equal temperature rises for components in each of the parallel airflow paths. Finally, the impedance of every airflow path is combined to arrive at total airflow impedance of the system.

¶ 50 Step 2:
Determine the total volume of airflow the fan or blower assembly provides against the total impedance. The information to be used in this step will be provided by the system designer as a fan flow data curve.

¶ 51 Step 3:
Determine what portion of that volume would distribute to each of the airflow paths. Next, knowing the volumetric flow rate for each airflow path, the temperature rise along that airflow path is determined in Step 4 (by knowing the power to be dissipated along that airflow path).

Property of CERN - For Internal Use Only – External Distribution Prohibited

¶ 52 Step 4:
Compare the temperature rises along every airflow path. If the rise is not within acceptable limits, then further action needs to be taken as described in Figure 5-6.

Figure 5-6 Thermal analysis process flow chart (courtesy of PICMG3.0)

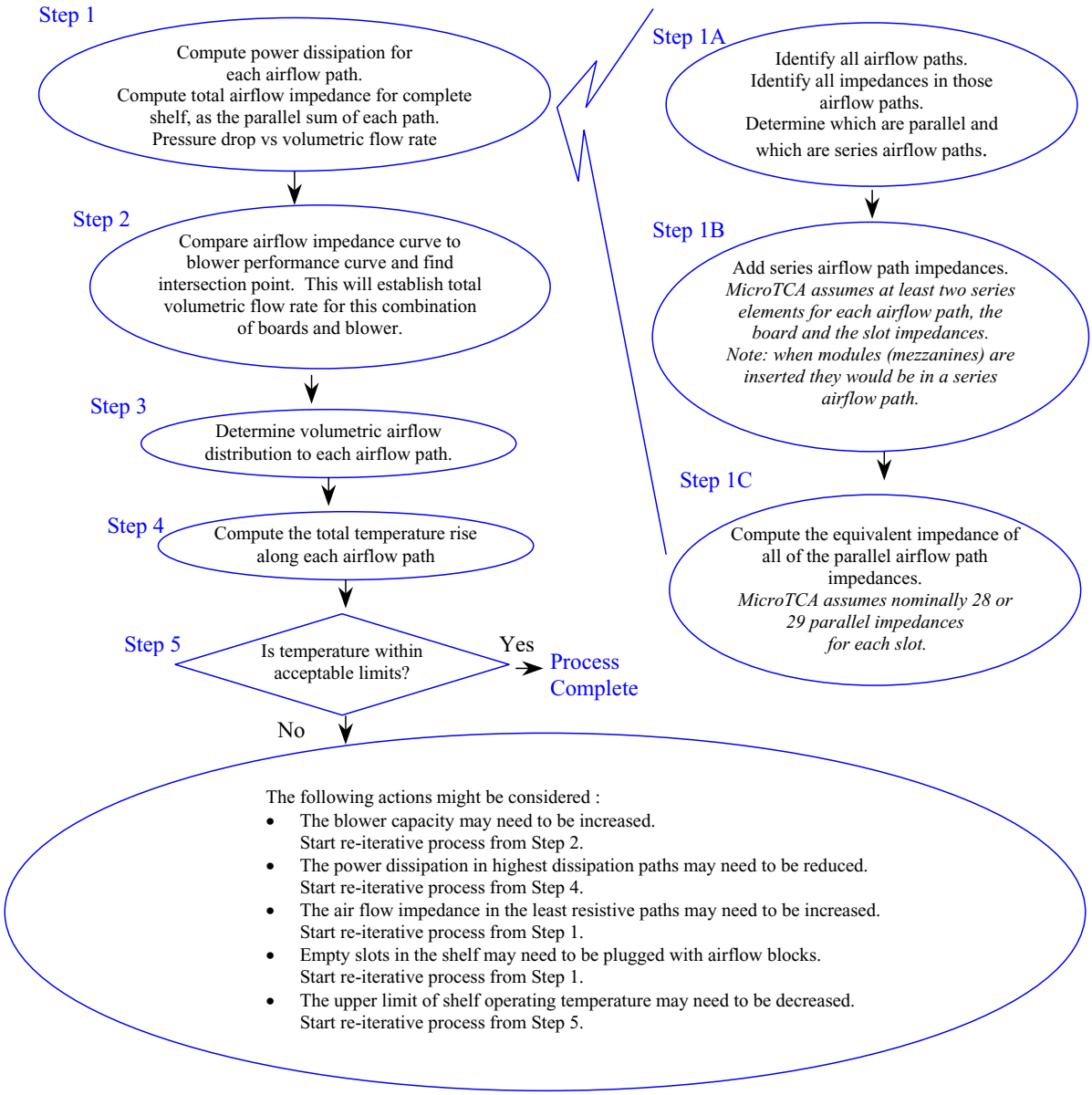

Property of CERN - For Internal Use Only – External Distribution Prohibited

5.27 Cooling limitations and examples

Figure 5-7 Cooling multiple MicroTCA Shelves in a 300 mm deep ETS cabinet

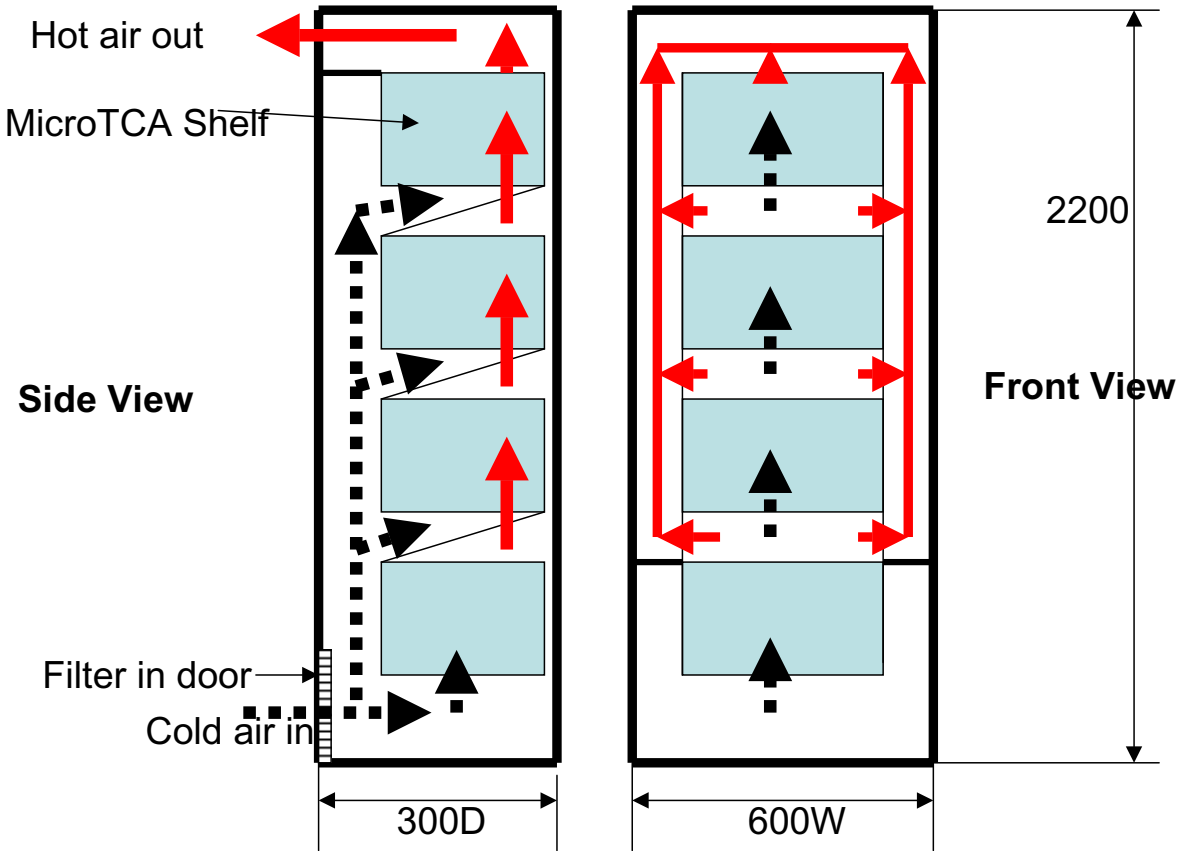

Property of CERN - For Internal Use Only – External Distribution Prohibited

Figure 5-8 ETS cabinet (300 mm) w/19 in. MicroTCA Shelf—sectional top view

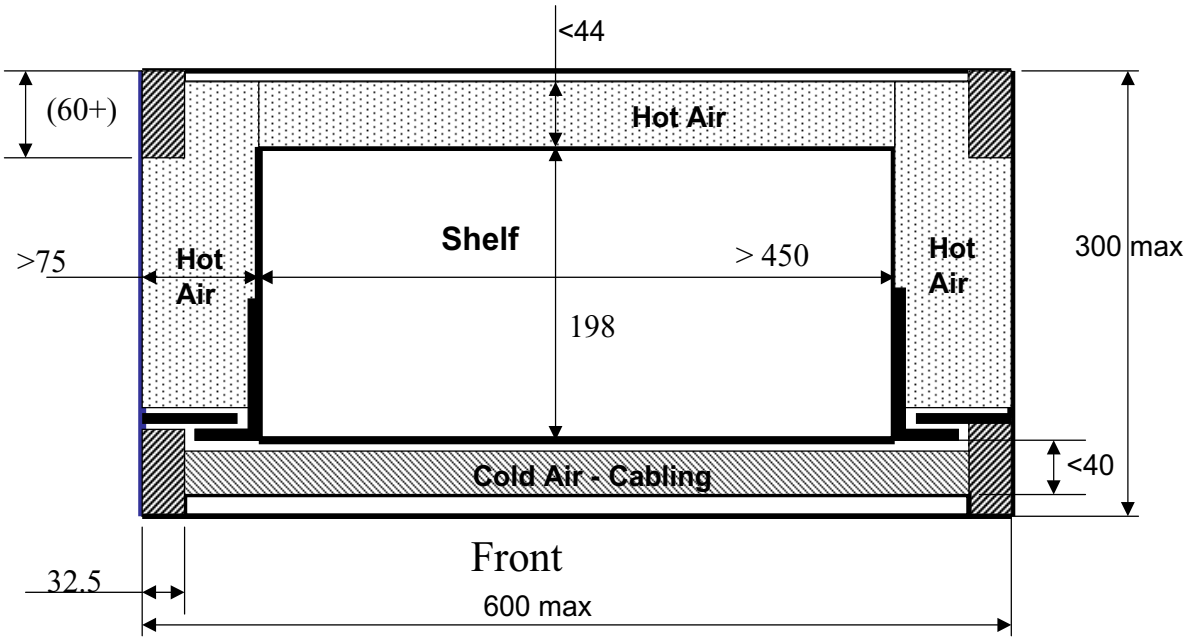

Figure 5-9 ETS cabinet (300 mm) w/ETSI MicroTCA Shelf—sectional top view

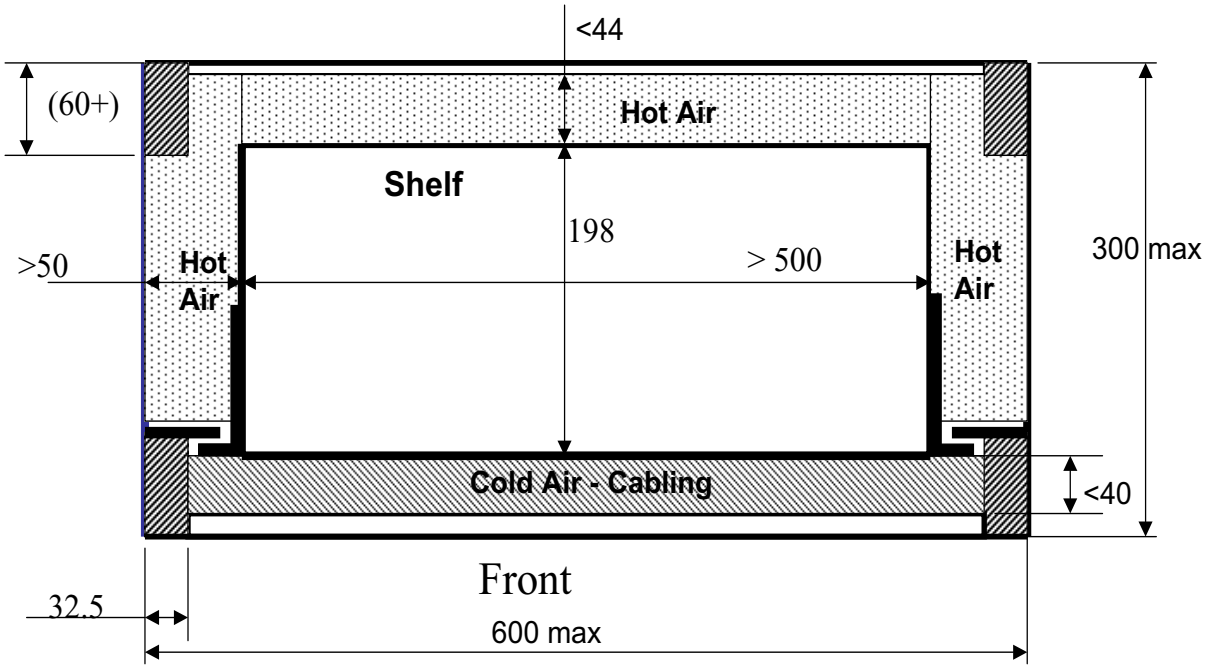

Property of CERN - For Internal Use Only – External Distribution Prohibited

Figure 5-10 ETS cabinet (300 mm) w/recessed 19 in. MicroTCA Shelf—sectional top view

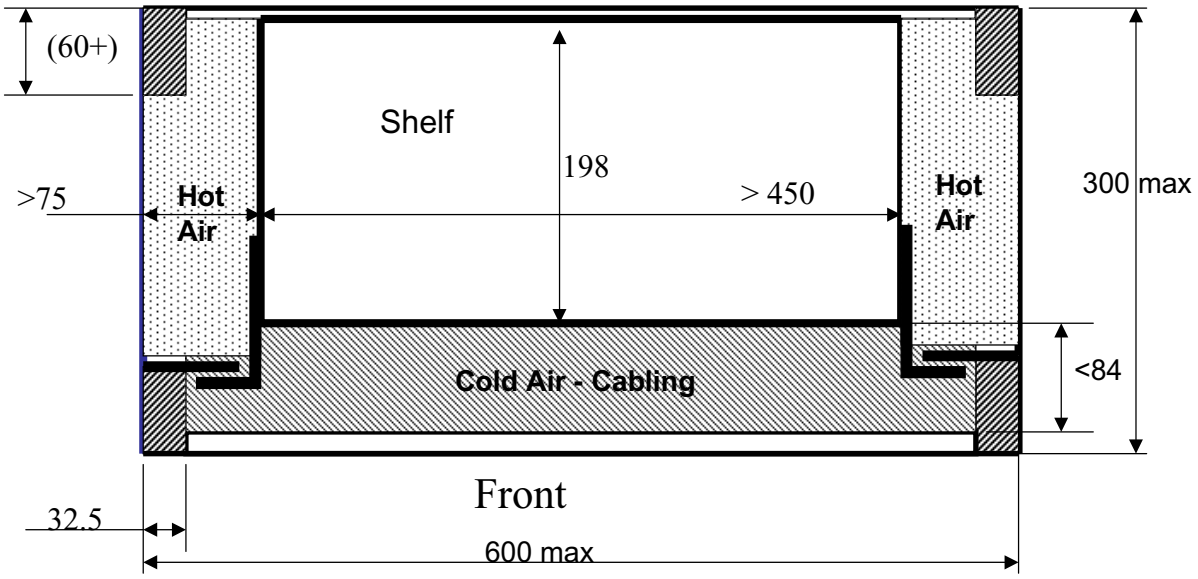

Figure 5-11 ETS cabinet (300 mm) w/recessed ETSI MicroTCA Shelf—sectional top view

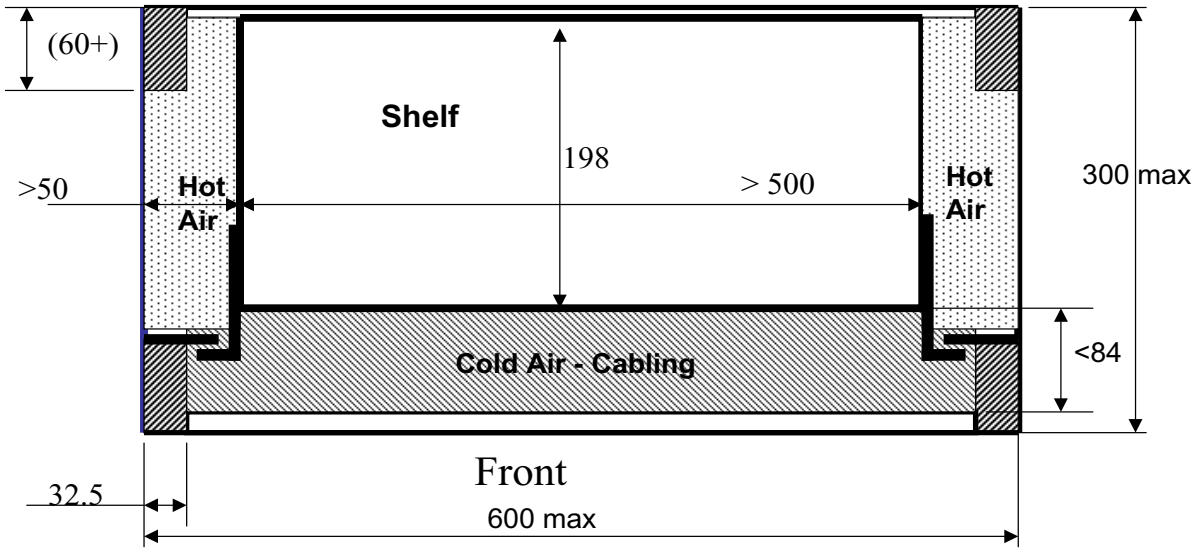

Property of CERN - For Internal Use Only – External Distribution Prohibited

Figure 5-12 ETS cabinet (600 mm) w/back-to-back MicroTCA Shelves—sectional top view

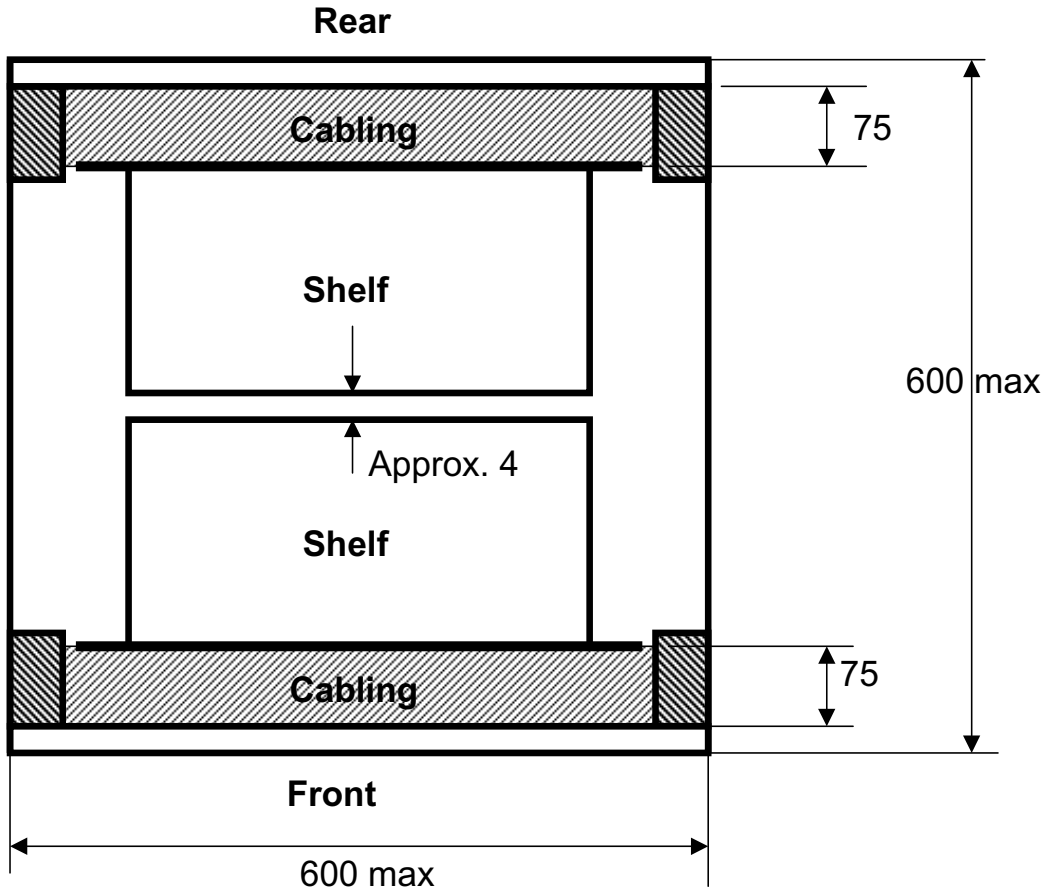

Property of CERN - For Internal Use Only – External Distribution Prohibited

Figure 5-13 ETS cabinet (600 mm) w/back-to-back MicroTCA Shelves—sectional side view

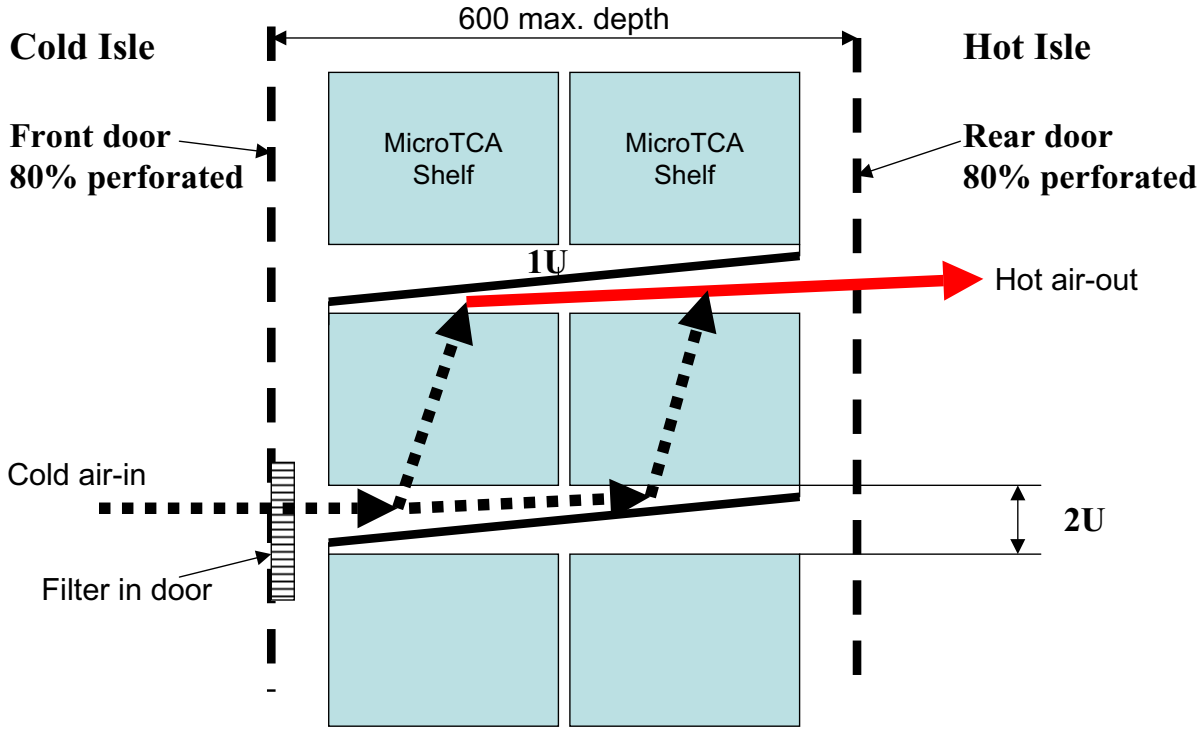

Property of CERN - For Internal Use Only – External Distribution Prohibited

5.28 References

¶ 53 The following table lists applicable specifications and standards related to the thermal concerns of MicroTCA. Further regulatory compliance may be required. Please refer to Section 8.

Table 5-7 Thermal references

Specification or Standards Body	Specification or Standard	Section or Part	Description	Note
Telcordia	GR-63-CORE	4.1/5.1	Environmental Criteria/Test	GR = General Requirements for Central Offices (COs) (for Bellcore Client Companies)
		4.5/5.5	Airborne Contaminants/Test	
		4.6/5.6	Acoustic Noise/Test	
	GR-78-CORE		Filters	
	GR-3028-CORE		Thermal Management in Telecom. COs	
ATIS	ATIS-0600005.200X		Acoustic Noise	ATIS = Alliance for Telecom. Industry Solutions
	ATIS-0600004.200X		Surface Temperature	
ETS	ETS TR 102 489		Thermal Management Guidance for Equipment and its Deployment	ETS (ETSI) = European Telecommunication Standard EN = European Norm
	ETS EN 300 119-5		Thermal Management	
	ETS 300 019-1-3	Class 3.1	Stationary use, Weather Protected, Temperature Controlled Location	
	ETS 300 753		Acoustic Noise Emitted by Telecom. Equipment (based on ISO 7779)	
ISO	ISO 7779		Acoustic Measurements of Airborne Noise Emitted by Computers and Business Equipment	ISO = International Standards Organization
	ISO 2533		Standard Air	
BS EN	BS EN 13202		Temperature Limits of Touchable Surfaces	BS = British Standard
	BS EN 563			

Property of CERN - For Internal Use Only – External Distribution Prohibited

Interconnect 6

6.1 Introduction

¶ 1 The MicroTCA.0 interconnect Framework maps signals to the MCH Connector (which mates the MCH with its Backplane) and routes those signals among the AdvancedMCs, across the Backplane and to the MCH-based switching elements. Performance headroom in the Connector accommodates future interconnect technologies with higher signal rates. The generic signal mapping across the MCH Connector supports a variety of system fabric topologies for connecting AdvancedMCs. The Interconnect interfaces are divided into five functional groups:

- Fabric Interface
- MCH-specific Interfaces
- System Management Interface
- Synchronization Clock Interface
- JTAG Test Interface
- Power

¶ 2 These interfaces are connected between the MCH and AdvancedMC Modules or directly between AdvancedMC Modules across the Backplane.

¶ 3 In addition, MicroTCA supports an optional supplementary, user defined set of interconnects called Zone 2 and Zone 3. These permit the interconnections of signals not supported in the usual AMC and MCH connectors. Zone 2 connectors occupy the spaces between the AMC connectors. Zone 3 connectors occupy the spaces above the AMC or MCH connectors. Zones 2 and 3 could be used for signals like additional power networks, special clocking, or proprietary busses. The full characteristics of Zones 2 and 3 are beyond the scope of this specification.

¶ 4 MCH, Backplane, and Module compatibility guidelines are defined within this section for the following functional groups: Fabric Interface, Synchronization Clocks and JTAG.

¶ 5 Interconnects related to Hardware Platform Management and Power are covered in Section 3 and Section 4, respectively.

¶ 6 Governance of AdvancedMC Module and MCH compatibility for the Interconnect interfaces, including the fabric interface, is provided by an electronic keying mechanism that is an integral part of the Hardware Platform Management architecture. Further considerations for E-Keying may be found in Section 3.

¶ 7 The ability to deploy interconnect technologies to the fabric interface is limited by the number of assigned fabric interface ports on the AdvancedMC Connector and the signal rate capacity defined by that Connector.

¶ 8 Backplane interconnect requirements and topologies vary depending on the level of system capability needed. This section shows three example MicroTCA systems to describe the Backplane requirements for three distinct levels of capability:

Property of CERN - For Internal Use Only – External Distribution Prohibited

- Redundant system which provides redundant MCHs, Fat Pipe fabric support, clock synchronization support, management support, and JTAG
- Basic redundant system which provides a redundant MCH with single-fabric support, and management, and variant basic redundant system which provides a redundant MCH with three-fabric support and management
- Non-redundant system which provides a single MCH

6.2 Fabric interface

6.2.1 Backplane fabric interface support requirements

¶ 9 The MicroTCA Backplane provides fabric connectivity to each of the supported AdvancedMCs. This specification defines one to seven fabric interfaces per MCH for every AdvancedMC Module present in the system.

Note: The seven possible fabrics per Slot emanating from the MCH are denoted as MCH Fabric[A:G]. The ports available from the AdvancedMCs are denoted as AdvancedMC Port[0:20].

Requirements

REQ 6.36 Backplanes **shall** support a minimum of one AdvancedMC and a maximum of twelve AdvancedMCs per MCH in non-redundant configurations or per MCH pair in redundant MCH configurations.

REQ 6.37 Backplanes **may** support any or all of the fabric interface ports between any Slots.

REQ 6.38 Backplanes supporting non-redundant MCHs **should** route MCH Fabric[A] to AMC Port[0] to each Slot.

REQ 6.39 Backplanes supporting non-redundant MCHs **should** route MCH Fabric[D:G] to AMC Port[4:7] to each Slot.

REQ 6.40 Backplanes supporting redundant MCHs **should** route MCH Fabric[A] of MCH 1 to AdvancedMC Port[0] for each Slot and MCH Fabric[A] of MCH 2 to AdvancedMC Port[1] for each Slot. See Figure 6-2.

REQ 6.41 Backplanes supporting redundant MCHs **should** route MCH Fabric[D:G] of MCH 1 to AdvancedMC Port[4:7] for each Slot and MCH Fabric[D:G] of MCH 2 to AdvancedMC Port[8:11] for each Slot. See Figure 6-2.

REQ 6.42 Fabric[D:G] single-port configurations **should** utilize Fabric[D] pairs only.

REQ 6.43 Fabric[D:G] double-port configurations **should** utilize Fabric[D] + Fabric[E] pairs only.

REQ 6.44 Fabric[D:G] full Channel configurations **should** utilize Fabric[D] + Fabric[E]+ Fabric[F]+ Fabric[G] pairs.

REQ 6.45 All MCH and AdvancedMC Connector Ground contacts **shall** be connected to Logic Ground.

REQ 6.46 The differential impedance of the Backplane serial Links for the fabric interface **shall** be 100 ohms ±10%.

REQ 6.47 Differential lines **shall** be tightly coupled to ensure that signals arrive in phase at the end of the line.

Property of CERN - For Internal Use Only – External Distribution Prohibited

REQ 6.48 Signal lengths, within the differential pairs of the Fabric Interface, **shall** be matched to better than 3.4ps (e.g., 0.50 mm in FR4 at $e_{(r)} = 4.0$). This is intended to provide support for up to 6.25Gbaud operation.

REQ 6.49 Signal lengths, within the differential pairs of the Fabric Interface, **should** be matched to better than 1.7 ps (e.g., 0.25 mm in FR4 at $e_{(r)} = 4.0$). This is intended to provide support for up to 12.5Gbaud operation.

REQ 6.50 For the fabric interface, the transmit and receive pairs within a Channel **shall** each have a matched delay of better than 17.0ps (e.g., 2.54 mm in FR4 at $e_{(r)} = 4.0$). The delays in the lanes of the transmit channels need not match the delays in the lanes of the receive channels. This is intended to provide support for up to 6.25Gbaud operation.

REQ 6.51 For the fabric interface, the transmit and receive pairs within a Channel **should** each have a matched delay of better than 8.5ps (e.g., 1.27 mm in FR4 at $e_{(r)} = 4.0$). The delays in the lanes of the transmit channels need not match the delays in the lanes of the receive channels. This is intended to provide support for up to 12.5Gbaud operation.

REQ 6.52 Backplanes targeted towards specific fabric applications **should** refer to AdvancedMC subsidiary specifications and respective protocol specifications for signal integrity guidelines. Where conflicts are present between the base protocol specifications and AdvancedMC specifications, the AdvancedMC specifications take precedence.

REQ 6.53 Fabric interface transmit pairs (e.g., TxFA+/–) from the MCH **shall** be cross-over routed to their respective receive pairs on the AdvancedMC (RxFA+/–). See Figure 6-1.

REQ 6.54 Conversely, fabric interface receive pairs (e.g., RxFA+/–) from the MCH **shall** be cross-over routed to their respective transmit pairs on the AdvancedMC (TxFA+/–).

Figure 6-1 Fabric cross-over routing

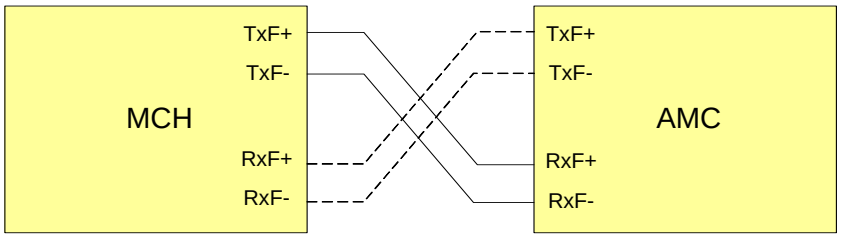

Property of CERN - For Internal Use Only – External Distribution Prohibited

Figure 6-2 Fabric interconnect example

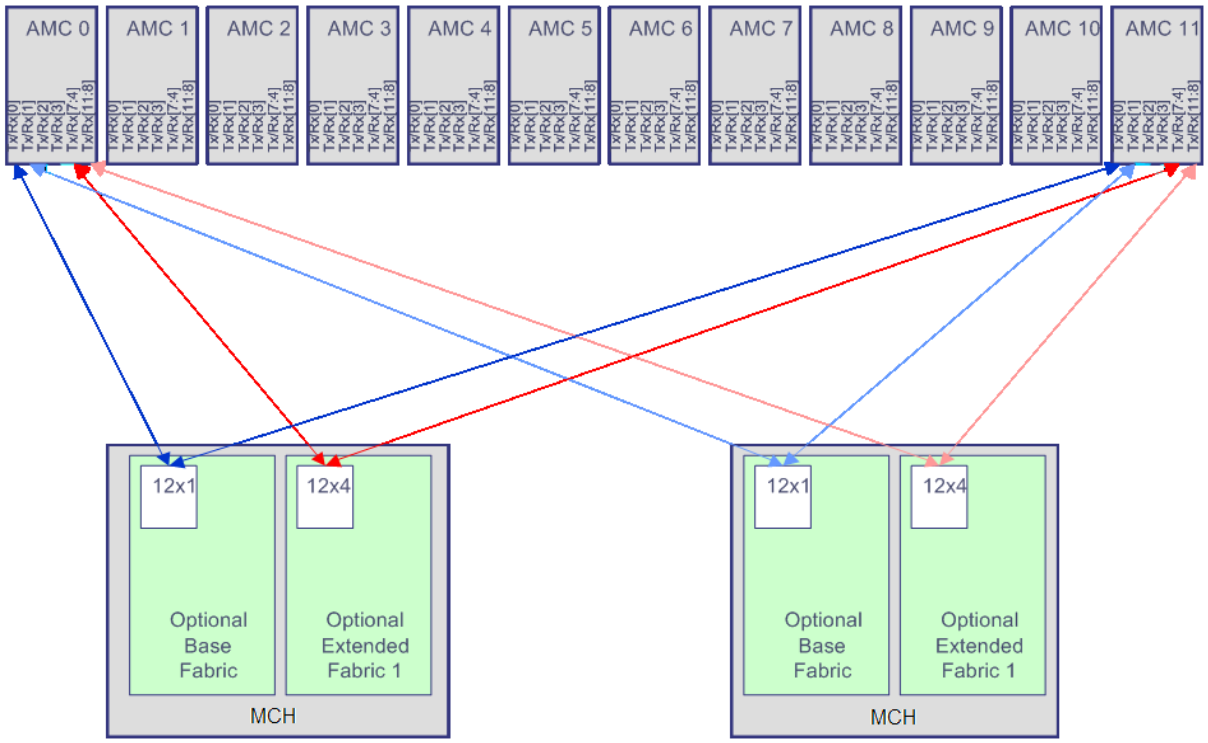

6.2.2 MCH fabric interface support requirements

¶ 10 The MCH provides fabric switch elements in addition to management functions. Fabric switch elements could provide switching for any of the fabrics defined in the AdvancedMC subsidiary specifications.

Requirement

REQ 6.55 MCHs that connect to the fabric interface **shall** do so in accordance with all requirements of the AMC.0 specification and all applicable AdvancedMC subsidiary specifications for the interconnect technologies used.

6.3 MCH Specific Interfaces

6.3.1 MCH update Channel interface

¶ 11 The update Channels are provided for vendor-specific signaling between MCHs. Example usages may include an Ethernet Link between management functions on the MCHs, such that state information can be transferred between redundant MCHs. Another example could be a 10GBASE-BX Link between fabric switches on the MCHs, such that switching elements can operate as an active-active fabric topology. Specific implementation and usage of these signals is outside the scope of the specification.

Property of CERN - For Internal Use Only – External Distribution Prohibited

Requirements

REQ 6.56 MCH update Channel transmit pairs (e.g., TxUA+/–) on the Backplane **shall** be cross-over routed to their respective receive pairs on the opposing redundant MCH (RxUA+/–). See Figure 6-3.

REQ 6.57 Conversely, MCH update Channel receive pairs (e.g., RxUA+/–) on the Backplane **shall** be cross-over routed to their respective transmit pairs on the opposing redundant MCH (TxUA+/–).

Figure 6-3 Update Channel mapping

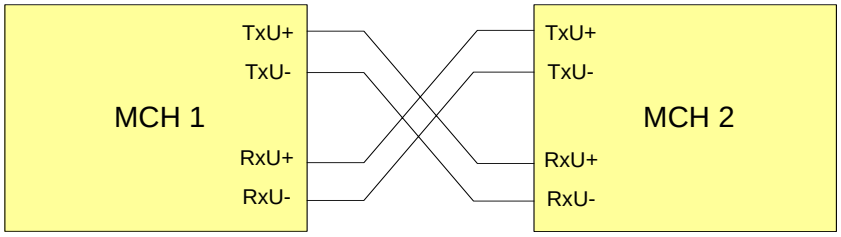

6.3.1.1 MCH update Channel interface requirements for LVDS

¶ 12 Independent of electronic keying (E-Keying), the receiver hardware must not be damaged during inadvertent interconnects of incompatible interfaces. Therefore, the following requirement has to be followed:

Requirement

REQ 6.58 MCH update Channel interfaces **shall** meet the LVDS interface electrical requirements of AMC.0.

REQ 6.59 Update channel lanes on the Backplane **should** have the same signal integrity properties (differential-pair length match, channel delay match, impedance) as the main fabric lanes

6.3.2 MCH cross-over Channel interface

¶ 13 The cross-over Channels are provided for vendor-specific signaling between MCHs. Specific implementation and usage of these signals is outside the scope of the specification. See Figure 6-4, “MCH cross-over Channel mapping”

Requirements

REQ 6.60 MCH cross-over Channel XOVER0+/– on the Backplane **shall** be cross-over routed to its respective XOVER2+/– receive pair on the opposing redundant MCH. See Figure 6-4.

REQ 6.61 Conversely, cross-over Channel XOVER2+/– on the Backplane **shall** be cross-over routed to its respective XOVER0+/– on the opposing redundant MCH.

REQ 6.62 Cross-over Channel XOVER1+/– on the Backplane **shall** be routed directly to XOVER1+/– on the opposing redundant MCH.

Property of CERN - For Internal Use Only – External Distribution Prohibited

Figure 6-4 MCH cross-over Channel mapping

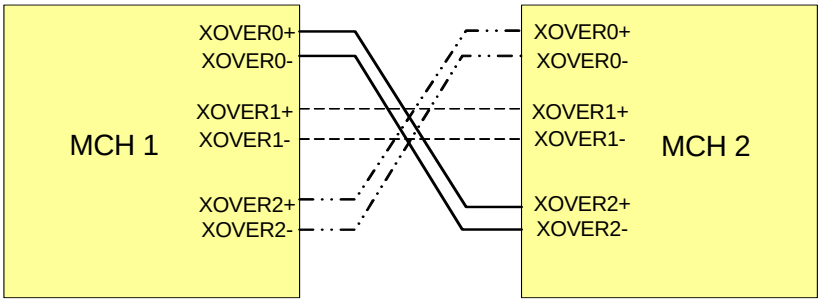

6.3.2.1 MCH cross-over Channel interface requirements for LVDS

¶ 14 Independent of electronic keying (E-Keying), the receiver hardware must not be damaged during inadvertent interconnects of incompatible interfaces. Therefore, the following requirements have to be followed:

Requirements

REQ 6.63 The MCH cross-over channel interface **shall** meet the LVDS and non-LVDS interface electrical requirements of AMC.0. If non-LVDS interfaces are implemented, they shall power up in the disabled state and shall only be enabled after the MCH confirms that it's paired MCH is compatible. The mechanism used to determine compatibility is beyond the scope of this specification.

REQ 6.64 Cross-over channel interface signals **may** be driven by M-LVDS drivers or other type of differential or single-ended drivers.

REQ 6.65 Cross-over channel interface signals **may** support M-LVDS EIA/TIA-899 receiver types: Type-1 (with receiver hysteresis) or Type-2 are both acceptable.

REQ 6.66 The differential pair impedances of the Cross-over channel interface pairs **shall** be 100 ohms ± 10%.

6.3.3 MCH PWR_ON interface

¶ 15 The MCH PWR_ON pin is used to indicate to the Power Module whether the Module inserted into the MCH Slot is an MCH or an AdvancedMC. An AdvancedMC has this signal assigned to GND on its pin list. The MCH Board pulls this signal high to MP. The Power Module detects the state of this signal. If it detects that the signal is asserted (detects that the Module is an MCH), the Power Module will automatically provide power to the Board. If it detects the signal is deasserted (detects that the Module is an AdvancedMC), it will wait for the management subsystem to command that the Board is allowed to be turned on.

Requirement

REQ 6.67 The PWR_ON pin of the MCH **shall** be either driven high to LVTTL output-high voltage level (>1V), or pulled-up to MP through a 100 ohm +/- 10% resistor. Behavior of this signal, as it relates to the latch, is specified in Section 3

Property of CERN - For Internal Use Only – External Distribution Prohibited

6.3.4 Inter-MCH IPMB-L interface

¶ 16 The SCL-L and SDA-L signals on pins 56 and 71 of MCH Connector 1 are a shared Local IPMB-L between the MCHs. Note that this is a shared direct connection between MCHs and not a cross-over.

Requirement

REQ 6.68 The MCH **shall** provide an IPMB-L bus on the Inter-MCH IPMB-L interface. Termination requirements for IPMB-L interfaces can be found in Section 3.

6.4 Synchronization clock interface

¶ 17 Telecom systems typically require one or two clocks to be sent from an MCH to each AdvancedMC Module and then for each AdvancedMC Module to be able to send a single (normally line-recovered) clock to the MCH. Figure 6-5 shows clocking in a multiplexer or switch to illustrate this. Reference clocks from each MCH are connected to each AdvancedMC, and a single clock from each AdvancedMC is routed to each MCH. In MicroTCA, Clocks 1 and 3 are the redundant clocks from each MCH, and Clock 2 is the line recovered clock from the AdvancedMC to both MCHs.

Property of CERN - For Internal Use Only – External Distribution Prohibited

Figure 6-5 Clocking example

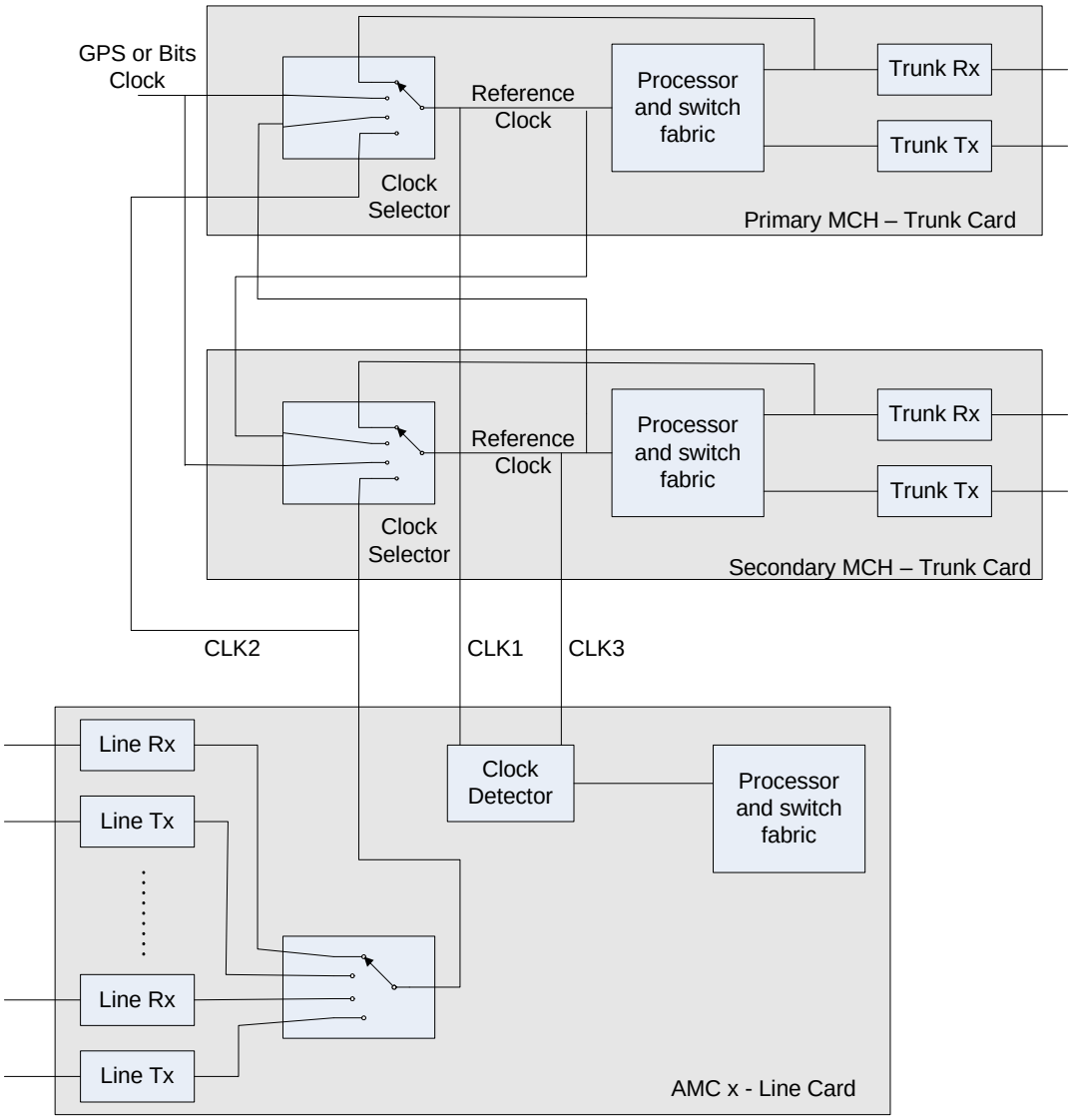

6.4.1 Signal descriptions

¶ 18 CLKx-[12:1][+|–] are differential, bi-directional clocks, as defined by AMC.0, where *x* is 1 to 3.

¶ 19 Voltage Differential Signaling is M-LVDS, as specified in TIA/EIA-899. Refer to EIA/TIA-899 for details.

¶ 20 EIA/TIA-899 specifies two receiver types: Type 1 and Type 2. Both receiver types can be used equally for the clock implementation. Selecting a Type 1 or Type 2 receiver depends on performance considerations.

Property of CERN - For Internal Use Only – External Distribution Prohibited

¶ 21 Type 1 receivers must offer built-in receiver hysteresis to avoid unwanted oscillation of the buffer output in the absence of a receiver input signal. The hysteresis also prevents noise on the input to create glitches on the M-LVDS output buffer. Type 1 receivers offer the best switching performance (lowest jitter). Generally, Type 1 receivers with input hysteresis are the best choice for the system and are highly recommended for clock rates equal to or higher than 20 MHz.

¶ 22 Type 2 receivers incorporate an input offset threshold of 100 mV. This blocks input noise from passing through the buffer. Unfortunately, this offset introduces a duty cycle error proportional to the input signal rise time. At higher clock rates, this duty cycle error may not be negligible, and Type 1 receivers become recommended. Type 2 receivers offer a fail-over feature: in case the input clock is lost, the Type 2 receiver output will signal a static LOW.

Requirements

REQ 6.69 MCHs **may** support any or all clocks.

REQ 6.70 MCH supported clocks **shall** be driven by M-LVDS, according to EIA/TIA-899.

REQ 6.71 MCH supported clocks **shall** support M-LVDS EIA/TIA-899 receiver types. Both Type 1 (with receiver hysteresis) or Type 2 are acceptable.

REQ 6.72 Differential traces on the Backplane **shall** be length-matched to within 3.4 ps (e.g., 0.5 mm in FR4 at $e_{(r)} = 4.0$) within each differential pair.

6.4.2 Clock architectures

¶ 23 MicroTCA defines non-redundant and redundant clocking architectures, as shown in Figure 6-6 and Figure 6-7.

¶ 24 The non-redundant architecture is for single MCH systems. The redundant architecture is for systems with two MCHs operating in a redundant manner.

¶ 25 The two clocking architectures use different Backplanes.

¶ 26 The redundant clocking architecture is designed to minimize the effect of removing one of the MCHs.

¶ 27 Both clocking architectures allow for telecom and non-telecom use.

Property of CERN - For Internal Use Only – External Distribution Prohibited

Figure 6-6 Non-redundant clock architecture

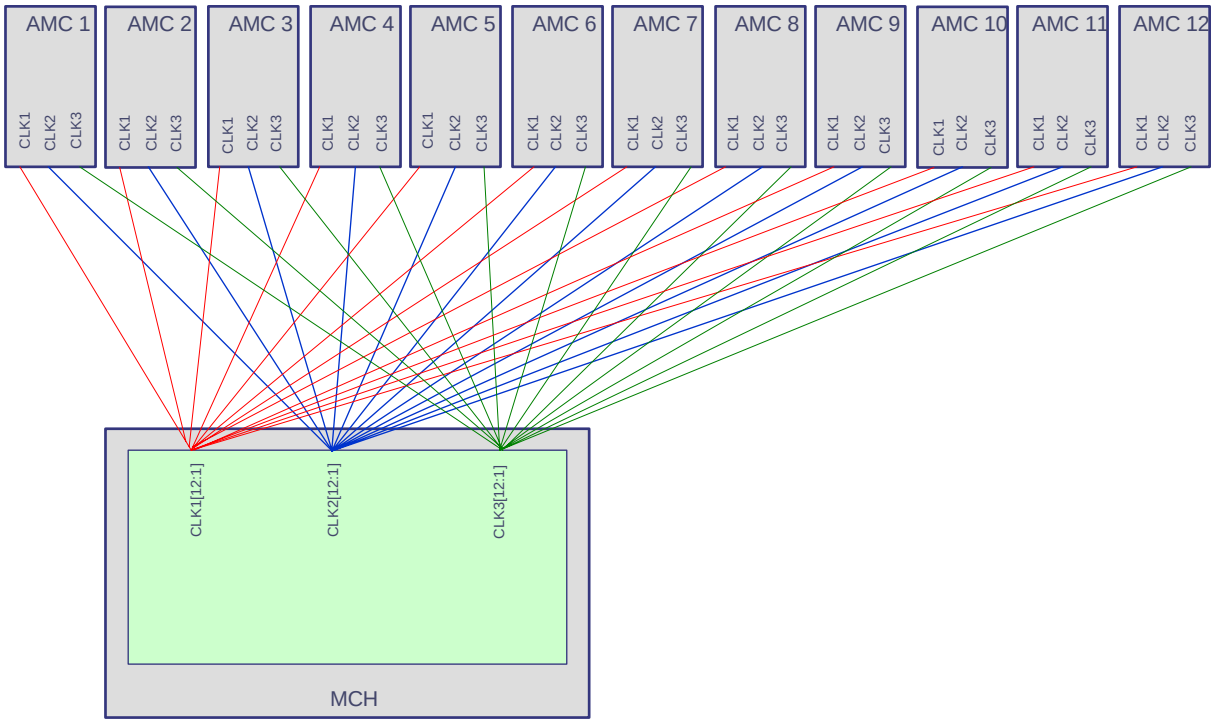

Figure 6-7 Redundant clock architecture

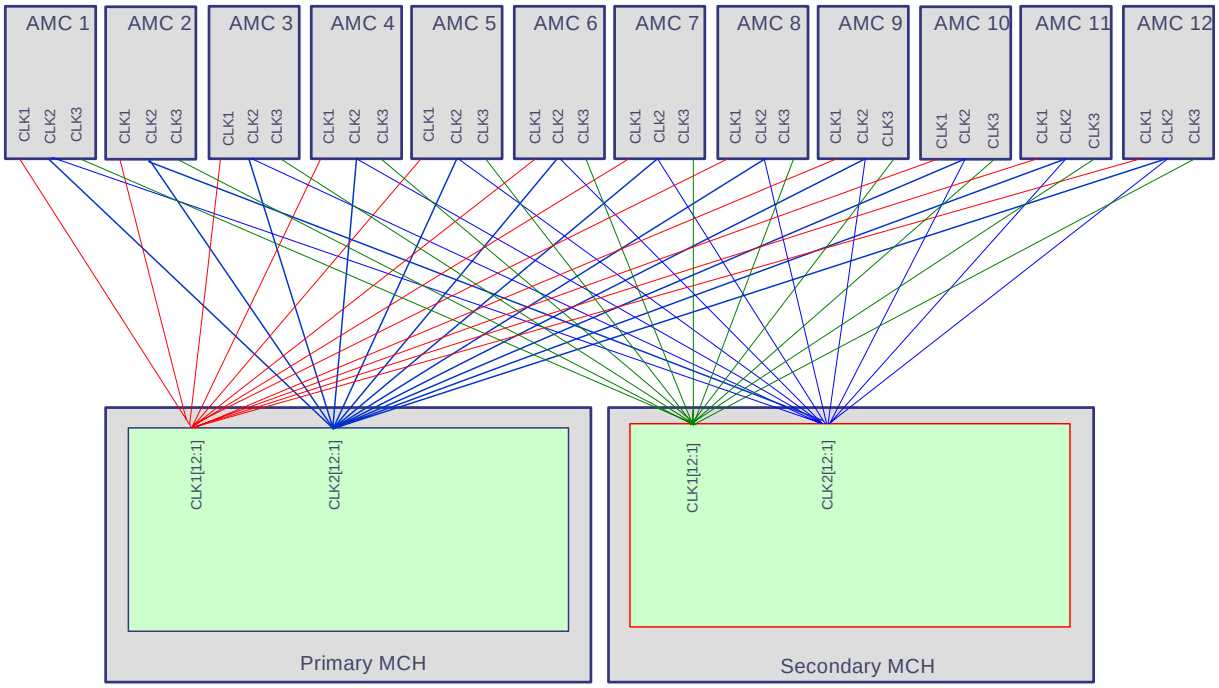

Property of CERN - For Internal Use Only – External Distribution Prohibited

6.4.2.1 Non-redundant clock architecture

¶ 28 This architecture (see Figure 6-6 and Figure 6-8) allows up to three point-to-point clocks per AdvancedMC, a maximum of 36 clocks per MCH to be implemented.

¶ 29 AdvancedMCs terminate the differential signal with a 100 ohm resistor. Since Clock 2 is routed to both MCHs in a redundant system, it needs to be terminated on the Backplane.

Requirement

REQ 6.73 Clocks 1, 2, and 3, if implemented, **should** be terminated on the Backplane at the MCH with 100 ohms.

Figure 6-8 Non-redundant Clock 2 termination

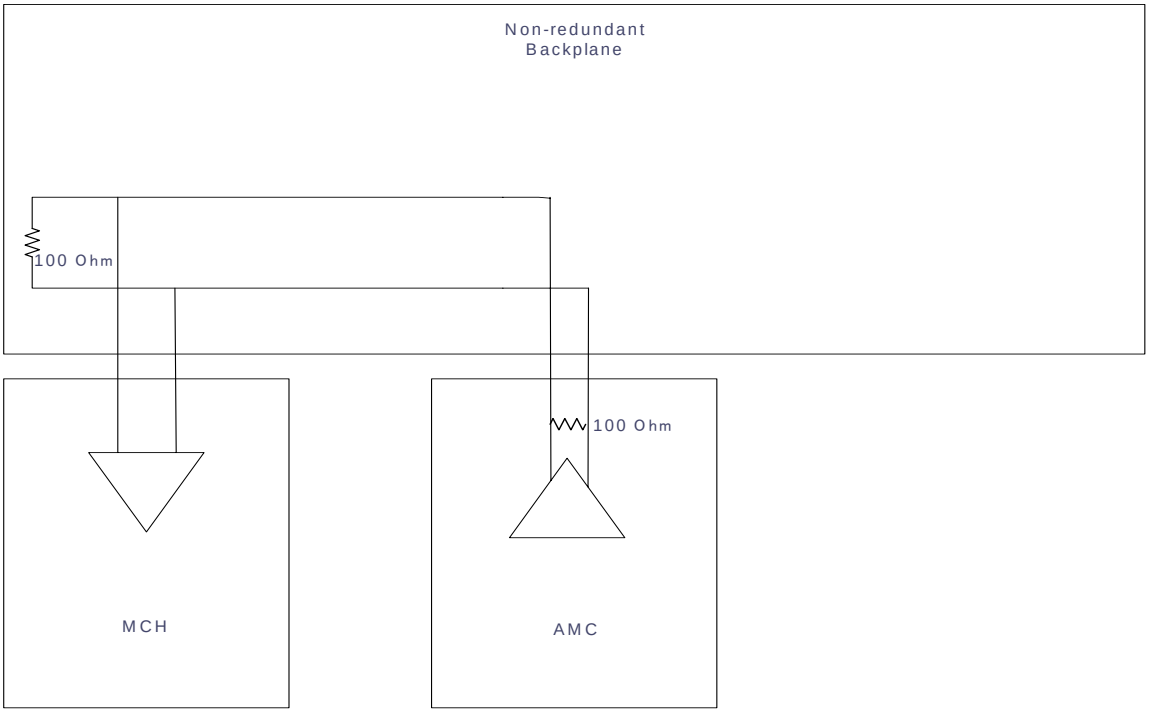

6.4.2.2 Redundant clock architecture

¶ 30 At the time of this writing (June 2006), the AMC ECN subcommittee is considering changes to AMC clock definition that may affect the MicroTCA redundant clock architecture. Subsequent releases of this specification will reflect any changes in AdvancedMC.

¶ 31 Refer to Figure 6-7 and Figure 6-9 for the redundant clock architecture.

¶ 32 Clock 1[12:1] from the primary MCH is routed to Clock 1 on each AdvancedMC. Clock 1[12:1] on the secondary MCH is routed to Clock 3 on each AdvancedMC. This allows redundant clocks from the two MCHs to each AdvancedMC.

¶ 33 Clock 2 from each AdvancedMC is split by a resistor network on the Backplane and routed to the primary MCH and the secondary MCH.

Property of CERN - For Internal Use Only – External Distribution Prohibited

Figure 6-9 Redundant Clock 2 termination

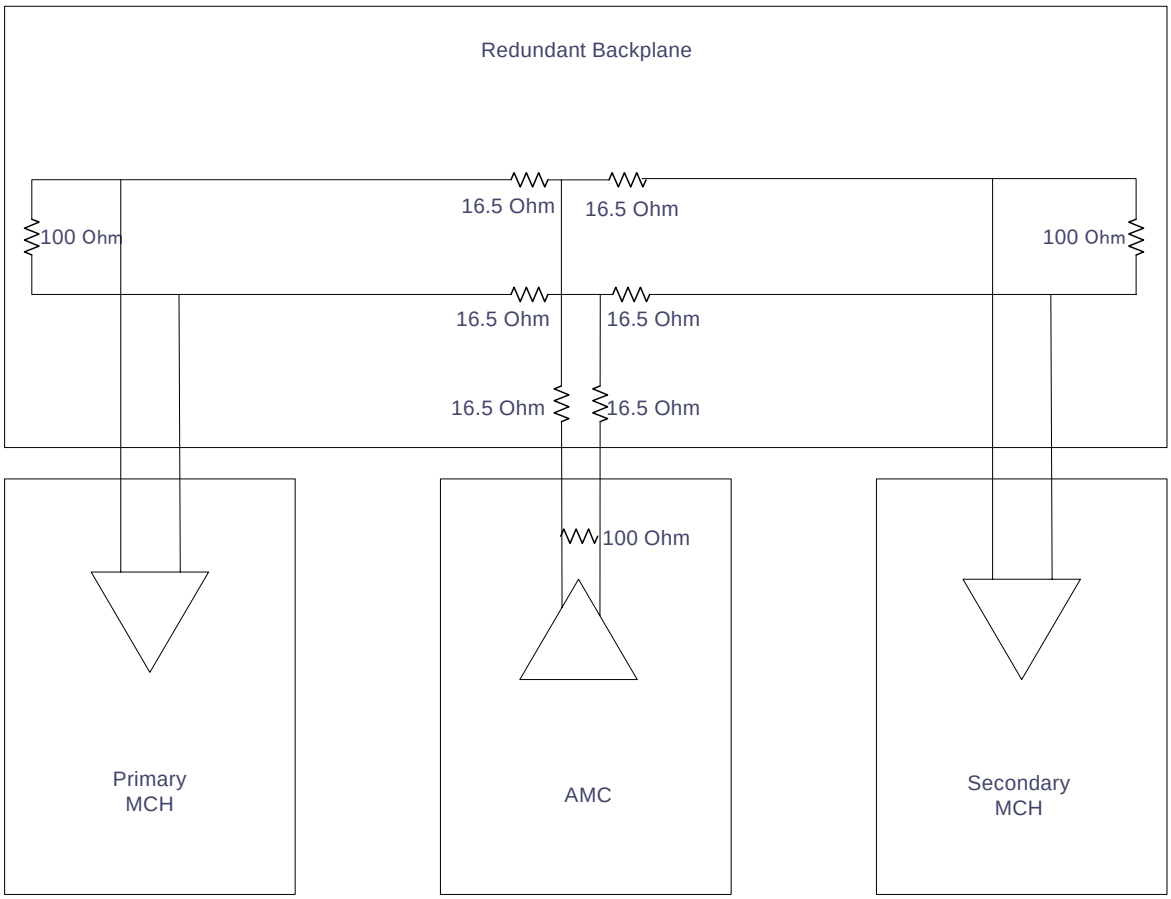

Requirements

REQ 6.74 Clocks 1 and 3, if implemented, **shall** be terminated on the Backplane at the MCH with 100 ohms 5%.

REQ 6.75 Clock 2, if implemented, **shall** be terminated: a) on the Backplane at the MCH with 100 ohms, and b) on the Backplane at each AdvancedMC with serial 16.5 ohm 5% resistors from each of the differential signals, followed by serial 16.5 ohm 5% resistors to each MCH. See Figure 6-9 for details.

REQ 6.76 The trace lengths from the AdvancedMC Connector to the first 16.5 ohm resistors **shall not** exceed 25 mm.

REQ 6.77 The sum of interconnect trace lengths between the 16.5 ohm resistors **shall not** exceed 10 mm.

Property of CERN - For Internal Use Only – External Distribution Prohibited

6.4.3 Non-Telecom and Telecom clocks

6.4.3.1 Non-Telecom clocks

¶ 34 The high speed serial signaling interfaces are originally specified for cable interfaces and work without the need for external clocking. However, variants defined for on-Board interfacing may derive advantages by requiring a synchronization support among the participants.

¶ 35 An important example for this is PCI Express, which is a high speed serial interconnect specified as a local, on-Board interconnect and for the connection of I/O cards. Unlike other high speed serial interconnects, PCI Express is specified to operate also in a spread spectrum mode. If the spread spectrum mode is used, the jitter requirements of the PCI Express Specification can be fulfilled only if the connected participants are clocked by a common clock source, carrying the spread spectrum modulation.

¶ 36 So to support the case described above and similar foreseeable configurations, an optional usage of CLK3 in support of data transport protocols is allowed.

Requirement

REQ 6.78 In systems requiring distribution of a fabric clock (for example, a spread spectrum clock for PCI Express) CLK3 from the MCH **should** be used for this purpose. Refer to the PICMG AMC.1 specification.

6.4.3.2 Telecom clocks

¶ 37 Requirements for telecom clocks are detailed in PICMG 3.0 (ATCA) AMC.0 specifications and are not repeated here. Clocks 1 and 3 are the redundant clocks to each AdvancedMC, and Clock 2 is from each AdvancedMC to both MCHs.

Requirement

REQ 6.79 CLK1 and CLK3 on the MCH in telecom applications **shall** meet the Carrier electrical requirements from AMC.0, with the exception that termination resistors reside on the backplane and not the MCH. CLK1 and CLK3 on the MCH in telecom applications **should** also meet the requirements of Clock1A/B (8kHz) or Clock2A/B (19.44MHz) of PICMG 3.0.

6.5 JTAG interface

¶ 38 Testing is an important issue in MicroTCA systems. The JTAG port supported in the AMC.0 specification provides a means to test the AdvancedMC Modules. MicroTCA extends this capability to test the entire MicroTCA system, including explicit definition for Power Modules and MCHs, and implicit allowance to extend testing capability to Cooling Units and OEM Modules which are outside the scope of the specification. This testing can occur at the subsystem level, at factory system test, and during field diagnostic operations. The system-wide test infrastructure is also valuable to update various non-volatile memories in a MicroTCA system, including those that hold microprocessor, DSP or NPU firmware, or FPGA configuration data.

Property of CERN - For Internal Use Only – External Distribution Prohibited

¶ 39 The JTAG support is provided via the Extended Side of the AdvancedMC Connector. The separate JTAG interfaces to the AdvancedMCs will allow the JTAG chain to be kept intact in the absence of an AdvancedMC in a Slot. The JTAG sub-system will provide independent access to each AdvancedMC Module, so Module-specific JTAG tests can be applied independently of the population configuration of the other Slots.

¶ 40 The JTAG Star and Multi-drop architectures ideally provide this independent access, but are not directly possible for MicroTCA, given the existing pin-out and resources available in the AdvancedMC, as well as the physical size of the MicroTCA Carrier Hub (MCH) Connector.

¶ 41 To support the user with a flexible interface, a JTAG Switch Module (JSM) is suggested to provide JTAG system-level support from the MCH Test Access Port (TAP) interface or an external tester interface. This interface provides a Star JTAG architecture, allowing the MCH or external tester to connect to each Module individually to perform test and update operations, while the MCH implements a single JTAG TAP interface at its edge. The MCH also is able to perform test and update operations on the redundant MCH.

6.5.1 JSM Overview

¶ 42 The JSM provides JTAG support to all JTAG-capable Modules in the system. It can provide test access from either the MCH acting as a JTAG master, or from an external test tool.

¶ 43 A typical implementation would likely provide the JSM as a field-replaceable modular unit. It could be provided as a Module similar in form-factor to an AMC, or as a backplane-resident unit. Since the JSM is primarily used as a test and upgrade vehicle, and failure of this Module likely will not affect services to end users, it is likely not hot-swappable and not likely to have a redundant spare in most applications. This section is written under the assumption of the above usage, and details on redundancy and hot-swap of the JSM are left outside the scope of this specification.

¶ 44 In order to maximize usage of power channels from the Power Modules defined in this specification, and not require sacrificing slot-count in order to accommodate JTAG functionality, it is recommended that the JSM be powered via sharing of Payload Power to the MCH slots.

Requirements:

REQ 6.80 MicroTCA systems **should** provide facilities to connect an optional JTAG Switch Module (JSM).

REQ 6.81 If the MicroTCA system provides facilities to connect an optional JSM, the Backplane **shall** route all JTAG signals from each AdvancedMC and MCH position to the JSM using a Star topology.

REQ 6.82 The JSM and Backplane interconnect for JTAG, if provided, **may** provide JTAG support to modules outside the scope of this specification (e.g. Cooling Units and OEM Modules).

REQ 6.83 The JSM, if provided, **should** be powered from MCH Payload Power.

REQ 6.84 If the Backplane supports a JSM, it **should** provide power through MCH Payload Power.

REQ 6.85 If the JSM is powered from MCH Payload Power, the JSM **shall** consume less than 2W of Payload Power.

REQ 6.86 No more than one JSM **shall** reside on a single MCH Payload Power channel.

Property of CERN - For Internal Use Only – External Distribution Prohibited

6.5.1.1 Example JTAG Switch Module

¶ 45 Figure 6-10 shows an example implementation of a JSM that can be used as a visual reference for the concepts and signals described in this section.

Figure 6-10 Example block diagram of a JSM that supports 12 AdvancedMCs and 2 MCHs

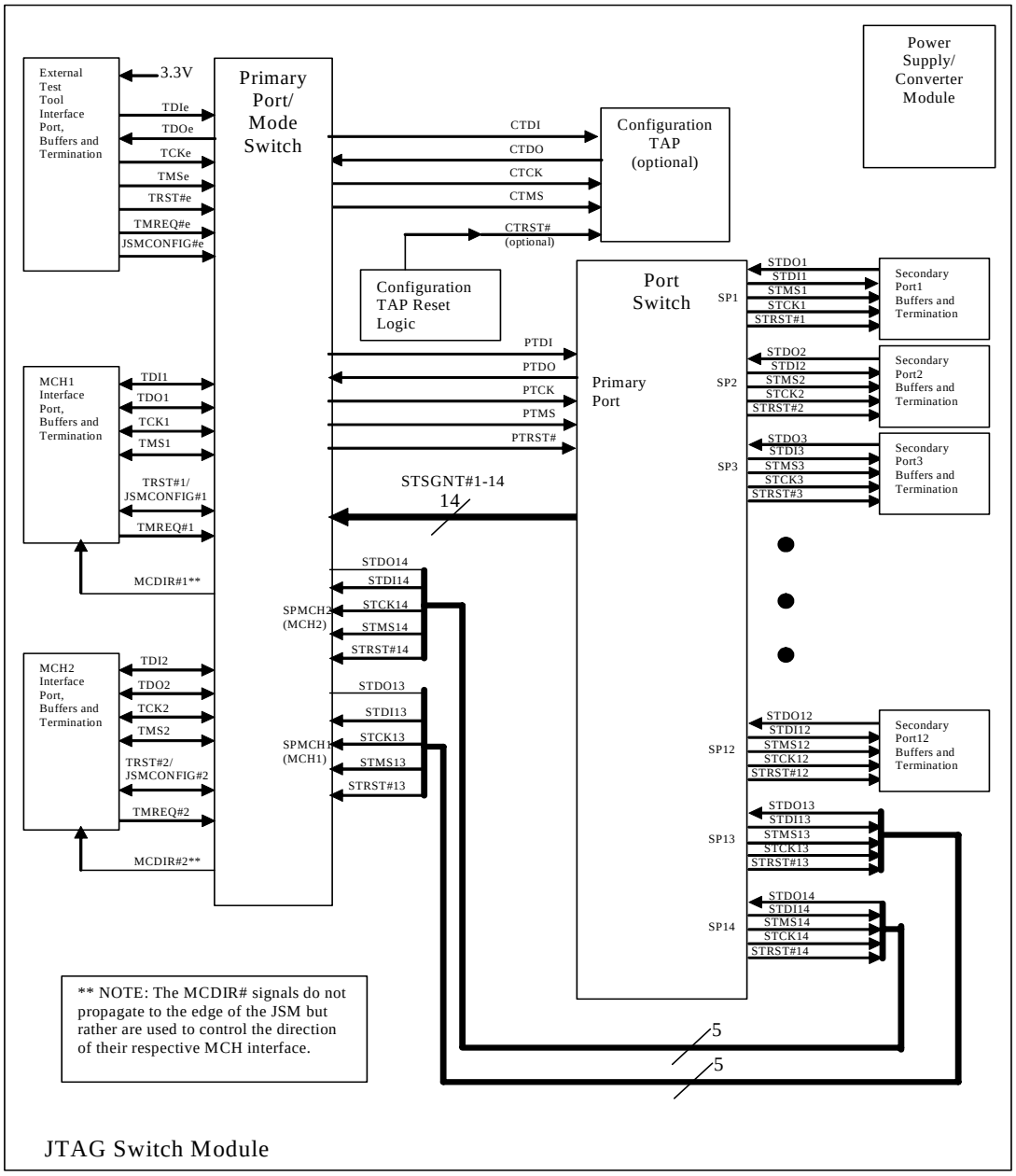

Property of CERN - For Internal Use Only – External Distribution Prohibited

6.5.2 JSM Signaling Overview

¶ 46 The JSM is comprised of a small PCB containing buffers, termination resistors, discrete logic, and/or programmable devices. The JSM resides on or near the MicroTCA Backplane to distribute the JTAG signals from the MCH to each of the AdvancedMC Modules. An interface is provided from each MCH to the JTAG Switch at the Primary Port/Mode Switch. The interfaces from the JTAG Switch to each of the AdvancedMC Modules are the Secondary JTAG Ports. There are also two additional Secondary JTAG Ports, providing testability to the MCH Modules, while the Modules are not requesting to be test masters. These Secondary JTAG Ports map back to the Primary Port/Mode Switch at the ports SPVC1 (Secondary Port interface for MCH1) and SPVC2 (Secondary Port interface for MCH2) to be gated appropriately in order to prevent contention of the MCH JTAG interface.

¶ 47 The Port Switch, if configurable, may be optionally programmed from either MCH by holding the TRST#/JSMCONFIG# signal low during all scan and state change operations. Thus, the AdvancedMCs will remain in the Test Logic Reset state while the Port Switch is being reprogrammed.

¶ 48 A redundant MCH may provide JTAG support through an optional input to the Primary Port/Mode Switch of the JTAG Switch. Control of which MCH is master can be determined by the value of the TMREQ# signal from each MCH. The MCH1 JTAG Port takes precedence if both TMREQ# signals are asserted.

¶ 49 To provide test access to each of the MCHs, each MCH JTAG port should be designed as a bidirectional interface, which is controlled by the MCH using the unidirectional signal TMREQ#, which is buffered directly to the Primary Port/Mode Switch. If TMREQ# is asserted low, the MCH is requesting to be the JTAG master for a test.

¶ 50 The Primary Port/Mode Switch is responsible for arbitrating which master port is actively connected to the Port Switch or the programming port of the Port Switch. The Primary Port/Mode Switch is also responsible for controlling the direction of the TAP interface buffer on each MCH input port of the JSM.

¶ 51 The signals MCDIR#1 and MCDIR#2 control the direction of the buffer inputs. The corresponding TMREQ# signal is the primary driver of the corresponding MCDIR# signal for that port. Thus, when the TMREQ# signal is asserted, the MCDIR# signal will set the JSM port wired to the MCH as an input port. If the TMREQ# signal is unasserted, the MCDIR# signal will set the JSM port wired to the MCH as an output port.

¶ 52 The External JTAG interface has master priority over the MCHs. MCH1 has master priority over MCH2. If either MCH is asserting TMREQ# while the Module is targeted for testing, the Primary Port/Mode Switch will disable the connection between the Secondary Scan Port TAP Switch and the MCH, ensuring there is no contention on the interface. In this case, all tests applied to the MCH under test will fail. If the MCH was not granted access to the Secondary Ports because another master was in control, the Primary Port/Mode Switch will disconnect the interface from the Port Switch, causing all applied tests to fail. Under normal operation (non-test mode), both MCH Modules should not drive their TMREQ# signals low.

Property of CERN - For Internal Use Only – External Distribution Prohibited

¶ 53 To program the Port Switch from an MCH, the MCH must assert its TMREQ# signal, while maintaining a low value on the TRST#/JSMCONFIG# signal to indicate the MCH is to be the master connected to the Configuration TAP. The TRST#/JSMCONFIG# signal for the current master is buffered to each of the Secondary JTAG TAP Ports as their STRST# signal, forcing all slave blades to remain in Test Logic Reset during the programming operation. The External JTAG interface takes precedence over the MCH ports for programming the Configuration TAP.

¶ 54 The external JTAG test tools may also program the Configuration TAP. Since not all external JTAG test tools support scan operations while holding TRST#e low, another signal is provided (JSMCONFIG#e) to act as the trigger for the programming operation. If JSMCONFIG#e and TMREQ#e are driven low, the external JTAG test port will be connected to the Port Switch for programming the device.

¶ 55 Upon selection of any of the Secondary Port of the Port Switch, a feedback signal is asserted, acknowledging the selection of that particular port. These are referred to as the Secondary Test Slave GraNT (STSGNT#nn) signals, with an active low signature. These signals are fed back to the Primary Port/Mode Switch and may be used during the arbitration process for determining the test master and availability of the MCH JTAG TAP Ports. Users may also use these signals for visual indication of selection to each Slot in the Cube.

6.5.3 JSM Interface to MCH1

Table 6-1 MCH1 to JSM pin mapping

JSM Pin Name	Internal JSM Signal Name	MCH1 Pin Name	Direction	Purpose
BufferedTCK1	TCK1	TCK	MCH master = MCH to JSM MCH slave = JSM to MCH	MCH Test Clock
BufferedTMS1	TMS1	TMS	MCH master = MCH to JSM MCH slave = JSM to MCH	MCH Test Mode Select
BufferedTDI1	TDI1	TDI	MCH master = MCH to JSM MCH slave = JSM to MCH	MCH Test Data In
BufferedTDO1	TDO1	TDO	MCH master = JSM to MCH MCH slave = MCH to JSM	MCH Test Data Out
BufferedTRST#1/ JSMCONFIG#1	TRST#1/ JSMCONFIG#1	TRST#	MCH master = MCH to JSM MCH slave = JSM to MCH	MCH Asynchronous Test Logic Reset/JSM Configuration Mode Select
TMREQ#1	TMREQ#1	TMREQ#	Unidirectional MCH to JSM	Test Master REQuest

Requirements:

REQ 6.87 If implemented, the Backplane **shall** route JTAG Interface connections between the JSM and MCH1 as depicted in Table 6-1.

REQ 6.88 The JSM **shall** provide individual drivers on the JSM with 8 mA or better driving capability for TCK1, TMS1, TDI1, and TRST#1/JSMCONFIG#1 to MCH1.

REQ 6.89 The drivers for TCK1, TMS1, TDI1, and TRST#1/JSMCONFIG#1 on the JSM **shall** only be drivable when MCH1 is in slave mode.

Property of CERN - For Internal Use Only – External Distribution Prohibited

REQ 6.90 A source terminated series resistor, which is sized according to the output characteristics of the driver, **shall** be provided on the JSM to the BufferedTCK1, BufferedTMS1, and BufferedTDI1 signals (i.e. typically 33 ohm for LV-CMOS buffer technology and 47 ohm for LVTTL buffer technology).

REQ 6.91 The JSM **shall** provide individual signal buffering for BufferedTDO1 with a corresponding 10K ohm pull-up resistor to 3.3 V derived from the JSM Power on the input to the buffer.

REQ 6.92 The buffer on the JSM for BufferedTDO1 **shall** only be enabled when MCH1 is in slave mode.

6.5.4 JSM Interface to MCH2

Table 6-2 MCH2 to JSM pin mapping

JSM Pin Name	Internal JSM Signal Name	MCH2 Pin Name	Direction	Purpose
BufferedTCK2	TCK2	TCK	MCH master = MCH to JSM MCH slave = JSM to MCH	MCH Test Clock
BufferedTMS2	TMS2	TMS	MCH master = MCH to JSM MCH slave = JSM to MCH	MCH Test Mode Select
BufferedTDI2	TDI2	TDI	MCH master = MCH to JSM MCH slave = JSM to MCH	MCH Test Data In
BufferedTDO2	TDO2	TDO	MCH master = JSM to MCH MCH slave = MCH to JSM	MCH Test Data Out
BufferedTRST#2/ JSMCONFIG#2	TRST#2/ JSMCONFIG#2	TRST#	MCH master = MCH to JSM MCH slave = JSM to MCH	MCH Asynchronous Test Logic Reset/JSM Configuration Mode Select
TMREQ#2	TMREQ#2	TMREQ#	Unidirectional MCH to JSM	Test Master REQuest

Requirements:

REQ 6.93 If the redundant MCH is supported, the JSM **shall** be interconnected with MCH2 as depicted in Table 6-2.

REQ 6.94 If the redundant MCH is supported, the JSM **shall** provide individual drivers with 8 mA or better driving capability for TCK2, TMS2, TDI2, and TRST#2/JSMCONFIG#2 to MCH2.

REQ 6.95 The drivers on the JSM for TCK2, TMS2, TDI2, and TRST#2/JSMCONFIG#2 **shall** only be drivable when MCH2 is in slave mode.

REQ 6.96 A source terminated series resistor, which is sized according to the output characteristics of the driver, **shall** be provided on the JSM to the BufferedTCK2, BufferedTMS2, and BufferedTDI2 signals (i.e. typically 33 ohm for LV-CMOS buffer technology and 47 ohm for LVTTL buffer technology).

Property of CERN - For Internal Use Only – External Distribution Prohibited

REQ 6.97 If the redundant MCH is supported, the JSM **shall** provide individual signal buffering for BufferedTDO2 with a corresponding 10K ohm pull-up resistor to 3.3 V derived from the JSM Power on the input to the buffer

REQ 6.98 The buffer on the JSM for BufferedTDO2 **shall** only be enabled when MCH2 is in slave mode.

REQ 6.99 The JSM **shall** provide a 20K ohm pull-down to Logic Ground at the input to the JSM for each BufferedTCKx signal.

REQ 6.100 The JSM **shall** provide a 20K ohm pull-up to 3.3V derived from the JSM Power at the input to the JSM for each BufferedTMSx signal.

REQ 6.101 The JSM **shall** provide a 20K ohm pull-down to Logic Ground at the input to the JSM for each BufferedTRST#x/JSMCONFIG#x signal.

Note: TRST#/JSMCONFIG# is used as the gating signal for which TAP is selected—the configuration programming port (low) or the Port Switch (high).

REQ 6.102 The JSM **shall** provide a 20K ohm pull-up to 3.3V derived from the JSM Power at the input to the JSM for each BufferedTDIx signal.

6.5.5 JSM Interface to AdvancedMCs

Table 6-3 AdvancedMC to JSM pin mapping

JSM Pin Name	Internal JSM Signal Name	AMC Pin Name	AMC Slot	Direction	Purpose
BufferedSTCK1	STCK1	TCK	1	JSM to AMC	AMC Test Clock
BufferedSTMS1	STMS1	TMS	1	JSM to AMC	AMC Test Mode Select
BufferedSTDI1	STDI1	TDI	1	JSM to AMC	AMC Test Data In
BufferedSTDO1	STDO1	TDO	1	AMC to JSM	AMC Test Data Out
BufferedSTRST#1	STRST#1	TRST#	1	JSM to AMC	AMC Asynchronous Test Logic Reset
BufferedSTCK2	STCK2	TCK	2	JSM to AMC	AMC Test Clock
BufferedSTMS2	STMS2	TMS	2	JSM to AMC	AMC Test Mode Select
BufferedSTDI2	STDI2	TDI	2	JSM to AMC	AMC Test Data In
BufferedSTDO2	STDO2	TDO	2	AMC to JSM	AMC Test Data Out
BufferedSTRST#2	STRST#2	TRST#	2	JSM to AMC	AMC Asynchronous Test Logic Reset
BufferedSTCK3	STCK3	TCK	3	JSM to AMC	AMC Test Clock
BufferedSTMS3	STMS3	TMS	3	JSM to AMC	AMC Test Mode Select
BufferedSTDI3	STDI3	TDI	3	JSM to AMC	AMC Test Data In
BufferedSTDO3	STDO3	TDO	3	AMC to JSM	AMC Test Data Out
BufferedSTRST#3	STRST#3	TRST#	3	JSM to AMC	AMC Asynchronous Test Logic Reset

Property of CERN - For Internal Use Only – External Distribution Prohibited

Table 6-3 AdvancedMC to JSM pin mapping (continued)

JSM Pin Name	Internal JSM Signal Name	AMC Pin Name	AMC Slot	Direction	Purpose
BufferedSTCK4	STCK4	TCK	4	JSM to AMC	AMC Test Clock
BufferedSTMS4	STMS4	TMS	4	JSM to AMC	AMC Test Mode Select
BufferedSTDI4	STDI4	TDI	4	JSM to AMC	AMC Test Data In
BufferedSTDO4	STDO4	TDO	4	AMC to JSM	AMC Test Data Out
BufferedSTRST#4	STRST#4	TRST#	4	JSM to AMC	AMC Asynchronous Test Logic Reset
BufferedSTCK5	STCK5	TCK	5	JSM to AMC	AMC Test Clock
BufferedSTMS5	STMS5	TMS	5	JSM to AMC	AMC Test Mode Select
BufferedSTDI5	STDI5	TDI	5	JSM to AMC	AMC Test Data In
BufferedSTDO5	STDO5	TDO	5	AMC to JSM	AMC Test Data Out
BufferedSTRST#5	STRST#5	TRST#	5	JSM to AMC	AMC Asynchronous Test Logic Reset
BufferedSTCK6	STCK6	TCK	6	JSM to AMC	AMC Test Clock
BufferedSTMS6	STMS6	TMS	6	JSM to AMC	AMC Test Mode Select
BufferedSTDI6	STDI6	TDI	6	JSM to AMC	AMC Test Data In
BufferedSTDO6	STDO6	TDO	6	AMC to JSM	AMC Test Data Out
BufferedSTRST#6	STRST#6	TRST#	6	JSM to AMC	AMC Asynchronous Test Logic Reset
BufferedSTCK7	STCK7	TCK	7	JSM to AMC	AMC Test Clock
BufferedSTMS7	STMS7	TMS	7	JSM to AMC	AMC Test Mode Select
BufferedSTDI7	STDI7	TDI	7	JSM to AMC	AMC Test Data In
BufferedSTDO7	STDO7	TDO	7	AMC to JSM	AMC Test Data Out
BufferedSTRST#7	STRST#7	TRST#	7	JSM to AMC	AMC Asynchronous Test Logic Reset
BufferedSTCK8	STCK8	TCK	8	JSM to AMC	AMC Test Clock
BufferedSTMS8	STMS8	TMS	8	JSM to AMC	AMC Test Mode Select
BufferedSTDI8	STDI8	TDI	8	JSM to AMC	AMC Test Data In
BufferedSTDO8	STDO8	TDO	8	AMC to JSM	AMC Test Data Out
BufferedSTRST#8	STRST#8	TRST#	8	JSM to AMC	AMC Asynchronous Test Logic Reset
BufferedSTCK9	STCK9	TCK	9	JSM to AMC	AMC Test Clock
BufferedSTMS9	STMS9	TMS	9	JSM to AMC	AMC Test Mode Select
BufferedSTDI9	STDI9	TDI	9	JSM to AMC	AMC Test Data In

Property of CERN - For Internal Use Only – External Distribution Prohibited

Table 6-3 AdvancedMC to JSM pin mapping (continued)

JSM Pin Name	Internal JSM Signal Name	AMC Pin Name	AMC Slot	Direction	Purpose
BufferedSTDO9	STDO9	TDO	9	AMC to JSM	AMC Test Data Out
BufferedSTRST#9	STRST#9	TRST#	9	JSM to AMC	AMC Asynchronous Test Logic Reset
BufferedSTCK10	STCK10	TCK	10	JSM to AMC	AMC Test Clock
BufferedSTMS10	STMS10	TMS	10	JSM to AMC	AMC Test Mode Select
BufferedSTDI10	STDI10	TDI	10	JSM to AMC	AMC Test Data In
BufferedSTDO10	STDO10	TDO	10	AMC to JSM	AMC Test Data Out
BufferedSTRST#10	STRST#10	TRST#	10	JSM to AMC	AMC Asynchronous Test Logic Reset
BufferedSTCK11	STCK11	TCK	11	JSM to AMC	AMC Test Clock
BufferedSTMS11	STMS11	TMS	11	JSM to AMC	AMC Test Mode Select
BufferedSTDI11	STDI11	TDI	11	JSM to AMC	AMC Test Data In
BufferedSTDO11	STDO11	TDO	11	AMC to JSM	AMC Test Data Out
BufferedSTRST#11	STRST#11	TRST#	11	JSM to AMC	AMC Asynchronous Test Logic Reset
BufferedSTCK12	STCK12	TCK	12	JSM to AMC	AMC Test Clock
BufferedSTMS12	STMS12	TMS	12	JSM to AMC	AMC Test Mode Select
BufferedSTDI12	STDI12	TDI	12	JSM to AMC	AMC Test Data In
BufferedSTDO12	STDO12	TDO	12	AMC to JSM	AMC Test Data Out
BufferedSTRST#12	STRST#12	TRST#	12	JSM to AMC	AMC Asynchronous Test Logic Reset

Requirements:

REQ 6.103 The secondary JTAG ports of the JSM **shall** be interconnected with the AdvancedMCs as depicted in Table 6-3.

REQ 6.104 The JSM **shall** provide individual drivers with 8 mA or better driving capability for STCK, STMS, STDI, and STRST# to each AdvancedMC Connector.

REQ 6.105 A source terminated series resistor, which is sized according to the output characteristics of the driver, **shall** be applied to the STCK, STMS, and STDI signals (i.e. typically 33 ohm for LV-CMOS buffer technology and 47 ohm for LVTTL buffer technology).

REQ 6.106 The JSM **shall** provide individual signal buffering for STDO with a corresponding 10K ohm pull-up resistor to 3.3 V derived from the JSM Power on the input to the buffer.

REQ 6.107 The JSM **shall** provide a 10K ohm pull-up resistor to 3.3 V derived from the JSM Power on the STDO input to the Port Switch to properly handle open circuit faults on the output of the STDO buffer.

Property of CERN - For Internal Use Only – External Distribution Prohibited

REQ 6.108 Each STMS buffer input on the JSM **shall** have a 10K ohm pull-up resistor to 3.3 V derived from the JSM Power to force a JTAG state of Test Logic/Reset in the event of a failing Port Switch or during Port Switch programming and a babbling STCK signal.

REQ 6.109 Each STRST# buffer input on the JSM **shall** have a 10K ohm pull-down to Logic Ground at its input to force a JTAG state of Test Logic/Reset in the event of a failing Port Switch or during Port Switch programming.

REQ 6.110 Each STCK buffer input on the JSM **shall** have a 10K ohm pull-down to Logic Ground at its input to force a stable signal on STCK in case of a JTAG Switch device failure or during JTAG Switch device programming.

REQ 6.111 During connection or disconnection between the JSM and the AdvancedMCs or MCHs, the JTAG state **should** be preserved on the AdvancedMC Module/Slave MCH by latching the value of the STMS signal sent to the Module prior to disconnection.

6.5.6 JSM Interface to Power Modules

Table 6-4 Power Module to JSM pin mapping

JSM Pin Name	Internal JSM Signal Name	PM Pin Name	Direction	Purpose
BufferedPMTCK1	PMTCK1	TCK	JSM to PM	PM Test Clock
BufferedPMTMS1	PMTMS1	TMS	JSM to PM	PM Test Mode Select
BufferedPMTDI1	PMTDI1	TDI	JSM to PM	PM Test Data In
BufferedPMTDO1	PMTDO1	TDO	PM to JSM	PM Test Data Out
BufferedPMTRST#1	PMTRST#1	TRST#	JSM to PM	PM Asynchronous Test Logic Reset

Requirements:

REQ 6.112 The secondary JTAG ports of the JSM **shall** be interconnected with the Power Modules as depicted in Table 6-4.

REQ 6.113 The JSM **shall** provide individual drivers with 8 mA or better driving capability for PMTCK, PMTMS, PMTDI, and PMTRST# to each Power Module Connector.

REQ 6.114 A source terminated series resistor, which is sized according to the output characteristics of the driver, **shall** be applied to the PMTCK, PMTMS, and PMTDI signals (i.e. typically 33 ohm for LV-CMOS buffer technology and 47 ohm for LVTTL buffer technology).

REQ 6.115 The JSM **shall** provide individual signal buffering for PMTDO with a corresponding 10K ohm pull-up resistor to 3.3 V derived from the JSM Power on the input to the buffer.

REQ 6.116 The JSM **shall** provide a 10K ohm pull-up resistor to 3.3 V derived from the JSM Power on the PMTDO input to the Port Switch to properly handle open circuit faults on the output of the PMTDO buffer.

REQ 6.117 Each PMTMS buffer input on the JSM **shall** have a 10K ohm pull-up resistor to 3.3 V derived from the JSM Power to force a JTAG state of Test Logic/Reset in the event of a failing Port Switch or during Port Switch programming and a babbling PMTCK signal.

Property of CERN - For Internal Use Only – External Distribution Prohibited

REQ 6.118 Each PMTRST# buffer input on the JSM **shall** have a 10K ohm pull-down to Logic Ground at its input to force a JTAG state of Test Logic/Reset in the event of a failing Port Switch or during Port Switch programming.

REQ 6.119 Each PMTCK buffer input on the JSM **shall** have a 10K ohm pull-down to Logic Ground at its input to force a stable signal on PMTCK in case of a JTAG Switch device failure or during JTAG Switch device programming.

REQ 6.120 During connection or disconnection between the JSM and the Power Modules or MCHs, the JTAG state **should** be preserved on the Power Module/Slave MCH by latching the value of the PMTMS signal sent to the Power Module prior to disconnection.

6.5.7 JSM Master Mode Selection

Table 6-5 Function table for JSM master modes

TMREQ#e	TMREQ#1	TMREQ#2	JSMCONFIG#e	TRST#1/ JSMCONFIG#1	TRST#2/ JSMCONFIG#2	Active Master	Mode	MCH1 Interface Mode	MCH2 Interface Mode
L	X	X	L	X	X	external	config	n/a	n/a
L	L	L	H	X	X	external	normal	blocked	blocked
L	L	H	H	X	X	external	normal	blocked	slave
L	H	L	H	X	X	external	normal	slave	blocked
L	H	H	H	X	X	external	normal	slave	slave
H	L	X	X	L	X	MCH1	config	master	n/a
H	L	L	X	H	X	MCH1	normal	master	blocked
H	L	H	X	H	X	MCH1	normal	master	slave
H	H	L	X	X	L	MCH2	config	n/a	master
H	H	L	X	X	H	MCH2	normal	slave	master
H	H	H	X	X	X	none	inactive	slave	slave

Requirements:

REQ 6.121 Control of which JTAG master port is master **shall** be determined by the value of the TMREQ# signal from each MCH. Table 6-5 describes the conditions where an MCH is authorized to be the JTAG master.

REQ 6.122 If provided, the JSM **shall** function as specified in Table 6-5.

REQ 6.123 Each TMREQ# signal **shall** provide a 10K ohm pull-up to 3.3 V derived from the JSM Power at the input to the JSM.

REQ 6.124 The Secondary Ports of the JSM **shall not** be allowed to connect to an MCH that is requesting to be master to ensure there is no contention on the MCH JTAG interface.

REQ 6.125 The JSM **shall** control the Port Switch setting using only the signal set of TCK, TMS, TDI, TDO, and TRST# in the corresponding JTAG master input (e.g., External Tester, MCH1, MCH2).

Property of CERN - For Internal Use Only – External Distribution Prohibited

REQ 6.126 The JSM, if configurable, **should** be optionally programmable from either MCH.

REQ 6.127 The JSM, if configurable from either MCH, **shall** be programmed by holding the BufferedTRST#x/JSMCONFIG#x signal of the MCH low during all scan and state change operations from the master.

REQ 6.128 The TRST#/JSMCONFIG# signal of the MCH that is the JTAG master **shall** be buffered to the STRST# signals of the Secondary Ports to act as the TRST# for the system.

REQ 6.129 The PTDI signal **shall** provide a 10K ohm pull-up to 3.3 V derived from the JSM Power at the input to the Port Switch.

REQ 6.130 The Primary Port/Mode Switch **shall** provide a direction gating signal (MCDIR#n) to establish the MCH interface buffer logic direction based on the value of the corresponding TMREQ# from the MCH and potentially the slave mode request signals.

REQ 6.131 Provisions for using an external JTAG test tool **should** be provided using the TDIe, TDOe, TCKe, TMSe, TRST#e, JSMCONFIG#e, and TMREQ#e signals of the JSM.

REQ 6.132 If provisions for testing using an external JTAG test tool are provided, the test equipment **shall** provide a separate gating signal (TMREQ#e) to the JSM to override access from the MCH Primary interfaces

6.5.8 JSM Interface to External Tester

Table 6-6 External tester to JSM pin mapping

JSM Pin Name	Internal JSM Signal Name	Direction	Purpose
BufferedTCKe	TCKe	External Tester to JSM	Test Clock
BufferedTMSe	TMSe	External Tester to JSM	Test Mode Select
BufferedTDIe	TDIe	External Tester to JSM	Test Data In
BufferedTDOe	TDOe	JSM to External Tester	Test Data Out
BufferedTRST#e	TRST#e	External Tester to JSM	Asynchronous Test Logic Reset
BufferedJSM-CONFIG#e	JSMCONFIG#e	External Tester to JSM	JSM Configuration Mode Select
BufferedTMREQ#e	TMREQ#e	External Tester to JSM	Test Master REQuest

REQ 6.133 If provisions for using a JTAG external tester are provided, the JSM shall be interconnected with the test equipment as depicted in Table 6-6.

REQ 6.134 The gating signal, TMREQ#e, **shall** have a 10K ohm pull-up resistor to 3.3 V derived from the JSM Power at the input to the JSM for the external TAP port to be disabled by default. The external tester is responsible for pulling this signal to Logic Ground when access from the external tester is required.

REQ 6.135 The JSM, if configurable, **shall** be optionally programmed from the external tester where provisions for using a JTAG external tester are provided.

REQ 6.136 If provisions for programming the JSM using an external JTAG test tool are provided, the test equipment **should** interface to the JSM programming port using the TDIe, TDOe, TCKe, TMSe, TMREQ#e, and JSMCONFIG#e signals of the JSM.

Property of CERN - For Internal Use Only – External Distribution Prohibited

REQ 6.137 If provisions for testing using an external JTAG test tool are provided, the JSM **shall** have a 10K ohm pull-up to 3.3 V derived from the JSM Power at the input to the JSM for the TMREQ#e signal.

REQ 6.138 If provisions for testing using an external JTAG test tool are provided, the JSM **shall** have a 10K ohm pull-up to 3.3 V derived from the JSM Power at the input to the JSM for the JSMCONFIG#e signal.

REQ 6.139 During programming of the Port Switch, the value of PTMS of the Port Switch **shall** be held to logic high to prevent the Secondary Port scan chain from activating inadvertently while the switch is selected to be programmed and the switch logic has not yet been erased. This will help keep the Secondary Port scan chain in Test Logic Reset state.

REQ 6.140 If the CTRST# signal is available on the programming port of the JSM, the signal **shall** be wired as power-up initialization logic strobing low to high to allow initialization of the test circuits of the JSM.

REQ 6.141 The JSM **may** use the TRST#/JSMCONFIG# signal of the active MCH master as an asynchronous test reset signal (STRST#) for the Secondary Ports.

REQ 6.142 The JSM **may** use the TRST#/JSMCONFIG# signal of the active MCH master as an asynchronous test reset signal (CTRST#) of the configuration TAP, if logic is provided to pulse the CTRST# signal low and then held high until triggered again by an active MCH master, asserting its TRST#/JSMCONFIG# low.

REQ 6.143 If provisions for testing using an external JTAG test tool are provided, the JSM **should** provide 3.3 V from the JSM Power Module to the interface Connector to support level translation hardware located in the external tester's interface Module.

REQ 6.144 The Port Switch **should** provide port-active feedback signals for the Secondary Ports that provide for slave operation to the MCHs (STSGNT#(n+1)–(n+2)).

REQ 6.145 The Port Switch **may** provide port-active feedback signals for the Secondary Ports that provide for slave operation to the AdvancedMC or other Modules in the system (STSGNT#1–n).

Note: Ideally, the JSM consists of a JTAG Switch function, containing configuration logic, which provides a JTAG TAP state machine, JTAG instruction registers, JTAG data registers, a multiplexer, and logic to latch/park the TMS signal of each AdvancedMC/Slave MCH Module at a JTAG stable state when the Master MCH/external JTAG is disconnected from the AdvancedMC/Slave MCH Module JTAG interface. IEEE Std. 1149.1 scan and state transition operations are provided to the Primary JTAG Port of the Port Switch to connect the Master MCH/external JTAG TAP to a specific AdvancedMC/Slave MCH Module JTAG TAP. During the connection to a different AdvancedMC/Slave MCH Module or disconnecting from all Modules, the JTAG state is to be preserved on the AdvancedMC/Slave MCH Module by latching the value of the TMS signal sent to the Module prior to disconnection. This operation is known as parking the Module in a stable JTAG state. During re-connection to an AdvancedMC/Slave MCH Module the JTAG TAP controller on the Master MCH must be brought to the matching JTAG stable state of the AdvancedMC/Slave MCH Module targeted for re-connection prior to establishing the connection.

Note: The simplest implementation of the JSM uses a programmable Port Switch that is configured to stitch together the TAP chains of each installed AdvancedMC Module as a daisy chain or ring configuration (one single JTAG chain for the entire system) instead of as a switch. Of course, there are many trade-offs with this type of design—primarily, the design is un-testable if any of the AdvancedMC Modules are missing, an AdvancedMC Module is replaced with a different model, or the system configuration changes (Slots populated differently from what the design assumes). This, however, demonstrates that it is possible to configure many different forms/implementations to support many different system topologies that are supported with reprogramming of the Port

Property of CERN - For Internal Use Only – External Distribution Prohibited

Switch in the reference design hardware shown. To support reusable test vectors across the system, the Port Switch configured as a switch supporting a Star or Radial configuration is preferred.

6.5.9 MCH JTAG

¶ 56 An MCH Module can be designed to operate as a JTAG master and slave, a JTAG slave, or as a JTAG master. A JTAG master and slave Module is able to test and program any JTAG slave in the system (e.g., AdvancedMC, redundant MCH), as well as be tested by the redundant MCH or an external JTAG test tool. The JTAG slave MCH can only be tested by the external JTAG test tool, since each MCH in the system is thought to be identical. A JTAG master MCH is able to test all the JTAG slaves in the system, but is unable to test the redundant MCH, since the redundant MCH is thought to be identical to the active MCH.

Requirements

REQ 6.146 An MCH Module **should** provide a JTAG interface that consists of the signals TCK, TMS, TDI, TDO, and TRST#/JSMCONFIG#.

Note: The terminology for the JTAG signals is in reference to the MCH acting as a slave. Thus, an MCH in master mode will use the TDI pin to drive the test data out to the JSM and receive test data back on the TDO pin (see Table 6-1 and Table 6-2 for further description of the pin mapping between the MCH and JSM signals).

REQ 6.147 An MCH Module **should** be designed to operate its JTAG interface as both a JTAG master and a JTAG slave.

REQ 6.148 An MCH Module **may** be designed to operate only as a JTAG slave.

REQ 6.149 An MCH Module **may** be designed to operate only as a JTAG master.

REQ 6.150 An MCH Module, if designed to operate as a JTAG master, **shall** provide a JTAG interface that connects to the JSM and controls the signals of the JTAG interface in such a way as to perform test and update operations on targeted slaves.

REQ 6.151 An MCH Module, if designed to operate as a JTAG slave, **shall** provide a JTAG interface that connects to the JSM and operates under the control of the signals of the JTAG interface in such a way as to respond to test and update operations performed on it by a master.

REQ 6.152 An MCH Module, if designed to operate as a JTAG master and slave, **shall** implement its JTAG port as a bidirectional interface, which direction is controlled by the MCH asserting or un-asserting its TMREQ# signal.

REQ 6.153 An MCH designed to be a JTAG master **shall** assert its TMREQ# signal when it is requesting to be master.

REQ 6.154 If TMREQ# is not asserted, the MCH **shall** be assumed to be configured as a JTAG slave.

REQ 6.155 Under normal operation (non-test mode), both MCH Modules **should not** drive their TMREQ# signals low

REQ 6.156 If JTAG is to be supported by the MCH as a slave, there **shall** be provided a 20K pull-down for TCK to Logic Ground.

REQ 6.157 If JTAG is to be supported by the MCH as a slave, there **shall** be provided a 20K pull-up for TMS to 3.3 V from the Payload Power.

REQ 6.158 If JTAG is to be supported by the MCH as a slave, there **shall** be provided a 20K pull-down to Logic Ground for TRST#.

Property of CERN - For Internal Use Only – External Distribution Prohibited

REQ 6.159 If JTAG is to be supported by the MCH as a slave, there **shall** be provided a 20K pull-up for TDI to 3.3 V derived from the Payload Power.

REQ 6.160 If JTAG is to be supported by the MCH as a slave, input buffering **shall** be provided for TCK, TMS, TRST#, and TDI.

REQ 6.161 If JTAG is to be supported by the MCH as a slave, an individual driver for TDO **shall** be provided.

REQ 6.162 An MCH requesting to be master **shall not** be accessible by the JSM for slave mode operation, since the same interface pins are required for slave operation.

REQ 6.163 When the MCH is not selected to be the JTAG master, an MCH designed only to be a JTAG master **shall** leave all the JTAG signals in an un-driven state, so that the pull-up bias on the JSM provides the default condition on the JTAG interface.

REQ 6.164 If JTAG is to be supported by the MCH as a master, there shall be provided input buffering for the TDO signal.

REQ 6.165 If JTAG is to be supported by the MCH as a master, there **shall** be provided a 20K pull-up for TDO to 3.3 V derived from Payload Power at the input to the buffer.

REQ 6.166 MCH Modules supporting JTAG acting as a master shall provide output buffering with 8mA or better driving capability for TCK, TMS, TDI, TRST#/JSMCONFIG#, and TMREQ#.

REQ 6.167 A source terminated series resistor, which is sized according to the output characteristics of the driver, **shall** be applied to the TCK, TMS, and TDI signals that are sourced by an MCH master (i.e. typically 33 ohm for LV-CMOS buffer technology and 47 ohm for LVTTL buffer technology).

REQ 6.168 An 8 mA or better driving capability **shall** be provided on the MCH for all JTAG port signals from the MCH to the JSM.

6.5.10 Power Module JTAG

Requirements

REQ 6.169 Power Modules **may** support the JTAG interface.

REQ 6.170 Power Modules which support JTAG **shall** meet the Module electrical requirements of AMC.0 Section 6.4 “JTAG Interface.”

6.6 MicroTCA Interface topologies

¶ 57 The AdvancedMC Connector provides up to 21 ports of fabric interconnect connectivity. The MCH Connector provides up to 84 ports of fabric interconnect connectivity to up to twelve AdvancedMCs (normally seven fabrics for twelve AdvancedMCs). This gives the flexibility to support a variety of fabric topologies. The following sections describe two fabric topologies that are expected to cover many of the application requirements and can be supported with MicroTCA applications.

Property of CERN - For Internal Use Only – External Distribution Prohibited

6.6.1 Topology models

¶ 58 There are fundamentally two MicroTCA topology models that can be adopted, these being the centralized MCH switch model and the Module-to-Module direct connectivity model. A mix of these topologies could exist within a given system. For example, a typical system could provide 1000BASE-BX Ethernet and/or PCI-Express as a centralized switched fabric. A storage topology could be routed as either direct Module-to-Module interconnects, or as a switched fabric.

6.6.1.1 Centralized MCH switch model

¶ 59 The general-purpose MicroTCA system could implement a centralized fabric-specific switch on the MCH. This allows point-to-point connectivity to be achieved from each Module to each and every other Module.

¶ 60 Figure 6-11 shows an example of a centralized MCH switch model using 1000BASE-BX Ethernet.

Figure 6-11 Example Centralized MCH switch model

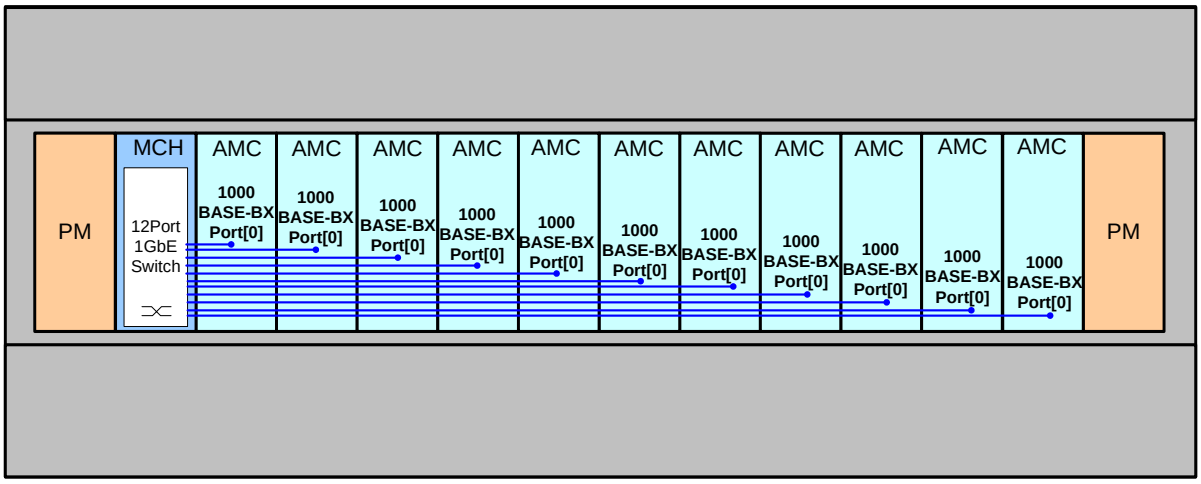

6.6.1.2 Module-to-Module direct connectivity model

¶ 61 It is allowed and supported to establish direct connection between a Port of one AdvancedMC Slot and a Port of another AdvancedMC Slot. This can help in developing optimized solutions.

¶ 62 If the interconnect between two AdvancedMC Modules is based on LVDS, then it is required to make a cross-over on the Carrier between the transmit and receive pairs for each connected Port. This ensures that the transmit connections of one AdvancedMC are connected to the receive connections of the other AdvancedMC.

¶ 63 Figure 6-12 shows a direct Module-to-Module model, using Serial ATA (SATA) between AdvancedMC Port 2 and Port 3.

Property of CERN - For Internal Use Only – External Distribution Prohibited

Figure 6-12 Example Direct Module-to-Module model

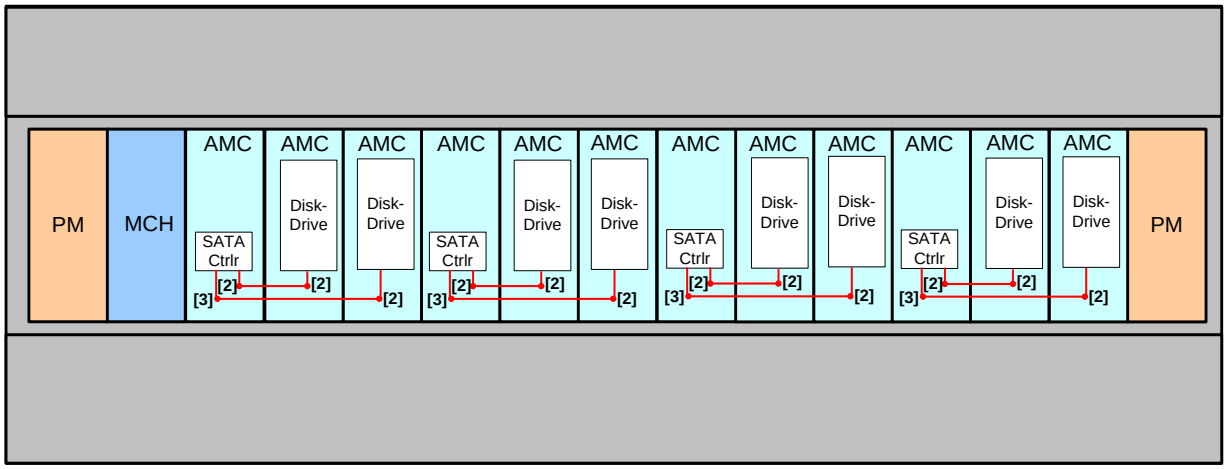

6.6.2 Correlation to AdvancedMC fabric regions

¶ 64 Figure 6-13 shows a general mapping of the MCH fabric interfaces to the AdvancedMC Common Options, Fat Pipe, Extended Fat Pipe, and Extended Options regions. This is provided as guidance for a general logical mapping of fabrics.

Note: This guidance is based on a snap-shot-in-time (as of March 2006) of AdvancedMC subsidiary specifications. Please refer to AdvancedMC subsidiary specification documents for official port mappings.

Property of CERN - For Internal Use Only – External Distribution Prohibited

Figure 6-13 AdvancedMC region mapping

Connector Region		AMC Port #	Signal Conventions			Non-redundant MCH Fabric #	Redundant MCH # / Fabric #
Basic Side	Common Options	0	AMC.2 1000BASE-BX			A	1 / A
		1	AMC.2 1000BASE-BX				2 / A
		2	AMC.3 SATA/SAS			B	1 / B
		3	AMC.3 SATA/SAS			C	2 / B
	Fat Pipe	4	AMC.1 x4 PCI-Express	AMC.4 x4 SRIO	AMC.2 10GBase-BX4	D	1 / D
		5				E	1 / E
		6				F	1 / F
		7				G	1 / G
Extended Side	Extended Fat Pipe	8		AMC.4 x4 SRIO	AMC.2 10GBase-BX4		2 / D
		9					2 / E
		10					2 / F
		11					2 / G
	Extended Options	12					
		13					
		14					
		15					
		16					
		17					
		18					
		19					
		20					

6.6.2.1 AdvancedMC Extended Options Region

¶ 65 The AdvancedMC Extended Options Region, as defined in the AMC.0 specification, is "loosely defined, but recommended for use for RTM (Rear Transition Module) support." Application of these ports has also found usage in fail-over and Automatic Protection Switching (APS) connectivity between AdvancedMCs. Usage of these signals for RTM access, or alternately as interfaces between AdvancedMCs for fail-over or Automatic Protection Switching, is outside the scope of this specification. However, such usage is not expressly forbidden by this specification.

6.7 MCH Connector pin allocation

¶ 66 The MCH Connector system supports up to four Connectors of 170 pins each, for a total of up to 680 pins.

¶ 67 Four levels of sequential mating (first mate, second mate, third mate, and last mate) are provided to ensure a correct electrical connection sequence is followed during insertion and extraction of the Module.

¶ 68 Pin positions in the tables appear as a physical AdvancedMC Connector would appear on a Backplane, with Pin 1 at the bottom, left side of a vertically oriented Connector.

Requirements

REQ 6.171 MCHs **shall** adhere to the pin lists listed in Table 6-7, Table 6-9, and Table 6-10.

Property of CERN - For Internal Use Only – External Distribution Prohibited

REQ 6.172 MCHs **shall** adhere to one of the pin lists listed in Table 6-8 or Table 6-11 for MCH Connector 2.

REQ 6.173 MCHs **may** implement a subset of the pin lists, including not providing an entire MCH Connector 2/3/4 or providing some interfaces to only a subset of AdvancedMCs.

6.7.1 Pin naming conventions

¶ 69 Table 6-7, Table 6-8, Table 6-9, Table 6-9, and Table 6-10 take the MCH Modules' perspective in the naming convention, i.e. **Tx** refers to the transmission of data from the MCH to the Backplane/Module; and conversely, **Rx** is data received by the MCH. The tables show a signal direction field to clarify the source and termination points, where applicable. The symbol "#" is used to indicate the active low signal type.

6.7.2 Fabric interface naming conventions

¶ 70 Pin mapping for the fabric interface is defined to the port granularity, with each port comprising a single transmit differential pair and a single receive differential pair.

¶ 71 For the MCH, the fabric interface signal naming convention follows [Tx/Rx]F[x]–[n][p], where:

- Tx/Rx = transmit/receive
- x = Fabric (A–G)
- n = Port number (1–12)
- p = polarity (+,–)

¶ 72 For the MCH, the Update Channel interface signal naming convention follows [Tx/Rx]FU[x][p], where:

- Tx/Rx = transmit/receive
- x = Fabric Update Channel (A–G)
- p = polarity (+,–)

6.7.3 Synchronization clock interface naming convention

¶ 73 Synchronization clock interface signal naming convention follows CLK[n]–[m][p], where:

- n = Clock number (1–3)
- m = Slot number (1–12)
- p = polarity (+,–)

Property of CERN - For Internal Use Only – External Distribution Prohibited

6.7.4 MCH Connector pin list

Table 6-7 MCH pin list, Connector 1

Pin No.	Signal	Driven By	Mating	Pin Function on MCH	Pin No.	Signal	Driven By	Mating	Pin Function on MCH
85	GND		First	Logic Ground	86	GND		First	Logic Ground
84	PWR	PM	First	Payload Power	87	IPMBL-SDA-12	IPMI Agent	Third	IPMB-L to AMC12
83	PS0#	BkPLane (GND)	Last	MCH Presence	88	IPMBL-SCL-12	IPMI Agent	Third	IPMB-L to AMC12
82	GND		First	Logic Ground	89	GND		First	Logic Ground
81	XOVER2-	Other MCH	Third	Cross-over Interface2-	90	IPMBL-SDA-11	IPMI Agent	Third	IPMB-L to AMC11
80	XOVER2+	Other MCH	Third	Cross-over Interface2+	91	IPMBL-SCL-11	IPMI Agent	Third	IPMB-L to AMC11
79	GND		First	Logic Ground	92	GND	PM	First	Logic Ground
78	XOVER1-	MCH-Other MCH	Third	Cross-over Interface1-	93	IPMBL-SDA-10	IPMI Agent	Third	IPMB-L to AMC10
77	XOVER1+	MCH-Other MCH	Third	Cross-over Interface1+	94	IPMBL-SCL-10	IPMI Agent	Third	IPMB-L to AMC10
76	GND		First	Logic Ground	95	GND		First	Logic Ground
75	XOVER0-	MCH	Third	Cross-over Interface0-	96	IPMBL-SDA-9	IPMI Agent	Third	IPMB-L to AMC9
74	XOVER0+	MCH	Third	Cross-over Interface0+	97	IPMBL-SCL-9	IPMI Agent	Third	IPMB-L to AMC9
73	GND		First	Logic Ground	98	GND	PM	First	Logic Ground
72	PWR	PM	First	Payload Power	99	IPMBL-SDA-8	IPMI Agent	Third	IPMB-L to AMC8
71	SDA_L	MCH-Other MCH	Second	IPMB-L Cross-over Data	100	IPMBL-SCL-8	IPMI Agent	Third	IPMB-L to AMC8
70	GND		First	Logic Ground	101	GND		First	Logic Ground
69	RxFA-12-	AMC-12	Third	Fabric A to AMC12, Receive-	102	IPMBL-SDA-7	IPMI Agent	Third	IPMB-L to AMC7
68	RxFA-12+	AMC-12	Third	Fabric A to AMC12, Receive+	103	IPMBL-SCL-7	IPMI Agent	Third	IPMB-L to AMC7
67	GND		First		104	GND		First	Logic Ground
66	TxFA-12-	MCH	Third	Fabric A to AMC12 Transmit-	105	IPMBL-SDA-6	IPMI Agent	Third	IPMB-L to AMC6
65	TxFA-12+	MCH	Third	Fabric A to AMC12 Transmit+	106	IPMBL-SCL-6	IPMI Agent	Third	IPMB-L to AMC6
64	GND		First	Logic Ground	107	GND		First	Logic Ground
63	RxFA-11-	AMC-11	Third	Fabric A to AMC11, Receive-	108	IPMBL-SDA-5	IPMI Agent	Third	IPMB-L to AMC5
62	RxFA-11+	AMC-11	Third	Fabric A to AMC11, Receive+	109	IPMBL-SCL-5	IPMI Agent	Third	IPMB-L to AMC5
61	GND		First	Logic Ground	110	GND		First	Logic Ground
60	TxFA-11-	MCH	Third	Fabric A to AMC11 Transmit-	111	IPMBL-SDA-4	IPMI Agent	Third	IPMB-L to AMC4
59	TxFA-11+	MCH	Third	Fabric A to AMC11 Transmit+	112	IPMBL-SCL-4	IPMI Agent	Third	IPMB-L to AMC4
58	GND		First	Logic Ground	113	GND		First	Logic Ground
57	PWR	PM	First	Payload Power	114	IPMBL-SDA-3	IPMI Agent	Third	IPMB-L to AMC3
56	SCL_L	MCH-Other MCH	Second	IPMB-L Cross-over Clock	115	IPMBL-SCL-3	IPMI Agent	Third	IPMB-L to AMC3
55	GND		First	Logic Ground	116	GND		First	Logic Ground
54	RxFA-10-	AMC-10	Third	Fabric A to AMC10, Receive-	117	IPMBL-SDA-2	IPMI Agent	Third	IPMB-L to AMC2
53	RxFA-10+	AMC-10	Third	Fabric A to AMC10, Receive+	118	IPMBL-SCL-2	IPMI Agent	Third	IPMB-L to AMC2
52	GND		First	Logic Ground	119	GND		First	Logic Ground
51	TxFA-10-	MCH	Third	Fabric A to AMC10 Transmit-	120	IPMBL-SDA-1	IPMI Agent	Third	IPMB-L to AMC1
50	TxFA-10+	MCH	Third	Fabric A to AMC10 Transmit+	121	IPMBL-SCL-1	IPMI Agent	Third	IPMB-L to AMC1
49	GND		First	Logic Ground	122	GND		First	Logic Ground
48	RxFA-9-	AMC-9	Third	Fabric A to AMC9, Receive-	123	IPMB0-SDA-B	IPMI Agent	Third	IPMB-0 B Data
47	RxFA-9+	AMC-9	Third	Fabric A to AMC9, Receive+	124	IPMB0-SCL-B	IPMI Agent	Third	IPMB-0 B Clock
46	GND		First	Logic Ground	125	GND		First	Logic Ground
45	TxFA-9-	MCH	Third	Fabric A to AMC9 Transmit-	126	IPMB0-SDA-A	IPMI Agent	Third	IPMB-0 A Data
44	TxFA-9+	MCH	Third	Fabric A to AMC9 Transmit+	127	IPMB0-SCL-A	IPMI Agent	Third	IPMB-0 A Clock
43	GND		First	Logic Ground	128	GND		First	Logic Ground
42	PWR	PM	First	Payload Power	129	I2C_SDA	MCH	Third	Carrier FRU I2C Data
41	ENABLE#	Backplane	Second	Enable	130	I2C_SCL	MCH	Third	Carrier FRU I2C Clock
40	GND		First	Logic Ground	131	GND		First	Logic Ground
39	RxFA-7-	AMC-7	Third	Fabric A to AMC7, Receive-	132	RSVD		Third	
38	RxFA-7+	AMC-7	Third	Fabric A to AMC7, Receive+	133	TMREQ#	JTAG Agent	Third	Test Master Request
37	GND		First	Logic Ground	134	GND		First	Logic Ground
36	TxFA-7-	MCH	Third	Fabric A to AMC7 Transmit-	135	RxFA-8-	AMC-8	Third	Fabric A to AMC8, Receive-
35	TxFA-7+	MCH	Third	Fabric A to AMC7 Transmit+	136	RxFA-8+	AMC-8	Third	Fabric A to AMC8, Receive+
34	GND		First	Logic Ground	137	GND		First	Logic Ground
33	RxFA-5-	AMC-5	Third	Fabric A to AMC5, Receive-	138	TxFA-8-	MCH	Third	Fabric A to AMC8 Transmit-
32	RxFA-5+	AMC-5	Third	Fabric A to AMC5, Receive+	139	TxFA-8+	MCH	Third	Fabric A to AMC8 Transmit+
31	GND		First	Logic Ground	140	GND		First	Logic Ground
30	TxFA-5-	MCH	Third	Fabric A to AMC5 Transmit-	141	RxFA-6-	AMC-6	Third	Fabric A to AMC6, Receive-
29	TxFA-5+	MCH	Third	Fabric A to AMC5 Transmit+	142	RxFA-6+	AMC-6	Third	Fabric A to AMC6, Receive+
28	GND		First	Logic Ground	143	GND		First	Logic Ground
27	PWR	PM	First	Payload Power	144	TxFA-6-	MCH	Third	Fabric A to AMC6 Transmit-
26	GA2	Backplane	Second	Geographic Address	145	TxFA-6+	MCH	Third	Fabric A to AMC6 Transmit+
25	GND		First	Logic Ground	146	GND		First	Logic Ground
24	RxFA-3-	AMC-3	Third	Fabric A to AMC3, Receive-	147	RxFA-4-	AMC-4	Third	Fabric A to AMC4, Receive-
23	RxFA-3+	AMC-3	Third	Fabric A to AMC3, Receive+	148	RxFA-4+	AMC-4	Third	Fabric A to AMC4, Receive+
22	GND		First	Logic Ground	149	GND		First	Logic Ground
21	TxFA-3-	MCH	Third	Fabric A to AMC3 Transmit-	150	TxFA-4-	MCH	Third	Fabric A to AMC4 Transmit-
20	TxFA-3+	MCH	Third	Fabric A to AMC3 Transmit+	151	TxFA-4+	MCH	Third	Fabric A to AMC4 Transmit+
19	GND		First	Logic Ground	152	GND		First	Payload Power
18	PWR	PM	First	Payload Power	153	RxFA-2-	AMC-2	Third	Fabric A to AMC2, Receive-
17	GA1	Backplane	Second	Geographic Address	154	RxFA-2+	AMC-2	Third	Fabric A to AMC2, Receive+

Property of CERN - For Internal Use Only – External Distribution Prohibited

Table 6-7 MCH pin list, Connector 1 (continued)

Pin No.	Signal	Driven By	Mating	Pin Function on MCH	Pin No.	Signal	Driven By	Mating	Pin Function on MCH
16	GND		First	Logic Ground	155	GND		First	Logic Ground
15	RxFUA-	Other MCH	Third	Fabric Update Receive-	156	TxFA-2-	MCH	Third	Fabric A to AMC2 Transmit-
14	RxFUA+	Other MCH	Third	Fabric Update Receive+	157	TxFA-2+	MCH	Third	Fabric A to AMC2 Transmit+
13	GND		First	Logic Ground	158	GND		First	Logic Ground
12	TxFUA-	MCH	Third	Fabric Update Transmit-	159	RxFA-1-	AMC-1	Third	Fabric A to AMC1, Receive-
11	TxFUA+	MCH	Third	Fabric Update Transmit+	160	RxFA-1+	AMC-1	Third	Fabric A to AMC1, Receive+
10	GND		First	Logic Ground	161	GND		First	Logic Ground
9	PWR	PM	First	Payload Power	162	TxFA-1-	MCH	Third	Fabric A to AMC1 Transmit-
8	RSVD		Second		163	TxFA-1+	MCH	Third	Fabric A to AMC1 Transmit+
7	GND		First	Logic Ground	164	GND		First	Logic Ground
6	RSVD		Second		165	TCK	JTAG Agent	Third	Test Clock
5	GA0	Backplane	Second	Geographic Address	166	TMS	JTAG Agent	Third	Test Mode Select
4	MP	PM	First	Management Power	167	TRST#	JTAG Agent	Third	Test Reset
3	PS1#	MCH	Last	MCH Presence	168	TDO	JTAG Agent	Third	Test Data Out
2	PWR	PM	First	Payload Power	169	TDI	JTAG Agent	Third	Test Data In
1	GND	MCH	First	Logic Ground	170	PWR_ON	MCH	First	MCH/AdvancedMC Differentiator to PM(s)

Table 6-8 MCH pin list, Connector 2

Pin No.	Signal	Driven By	Mating	Pin Function on MCH	Pin No.	Signal	Driven By	Mating	Pin Function on MCH
85	GND		First	Logic Ground	86	GND		First	Logic Ground
84	CLK1-12-	MCH	Third	CLK1- to AMC12	87	CLK2-12-	AMC-12	Third	CLK2- from AMC12
83	CLK1-12+	MCH	Third	CLK1+ to AMC12	88	CLK2-12+	AMC-12	Third	CLK2+ from AMC12
82	GND		First	Logic Ground	89	GND		First	Logic Ground
81	CLK1-11-	MCH	Third	CLK1- to AMC11	90	CLK2-11-	AMC-11	Third	CLK2- from AMC11
80	CLK1-11+	MCH	Third	CLK1+ to AMC11	91	CLK2-11+	AMC-11	Third	CLK2+ from AMC11
79	GND		First	Logic Ground	92	GND		First	Logic Ground
78	CLK1-10-	MCH	Third	CLK1- to AMC10	93	CLK2-10-	AMC-10	Third	CLK2- from AMC10
77	CLK1-10+	MCH	Third	CLK1+ to AMC10	94	CLK2-10+	AMC-10	Third	CLK2+ from AMC10
76	GND		First	Logic Ground	95	GND		First	Logic Ground
75	CLK1-9-	MCH	Third	CLK1- to AMC9	96	CLK2-9-	AMC-9	Third	CLK2- from AMC9
74	CLK1-9+	MCH	Third	CLK1+ to AMC9	97	CLK2-9+	AMC-9	Third	CLK2+ from AMC9
73	GND		First	Logic Ground	98	GND		First	Logic Ground
72	CLK1-8-	MCH	Third	CLK1- to AMC8	99	CLK2-8-	AMC-8	Third	CLK2- from AMC8
71	CLK1-8+	MCH	Third	CLK1+ to AMC8	100	CLK2-8+	AMC-8	Third	CLK2+ from AMC8
70	GND		First	Logic Ground	101	GND		First	Logic Ground
69	CLK1-7-	MCH	Third	CLK1- to AMC7	102	CLK2-7-	AMC-7	Third	CLK2- from AMC7
68	CLK1-7+	MCH	Third	CLK1+ to AMC7	103	CLK2-7+	AMC-7	Third	CLK2+ from AMC7
67	GND		First	Logic Ground	104	GND		First	Logic Ground
66	CLK1-6-	MCH	Third	CLK1- to AMC6	105	CLK2-6-	AMC-6	Third	CLK2- from AMC6
65	CLK1-6+	MCH	Third	CLK1+ to AMC6	106	CLK2-6+	AMC-6	Third	CLK2+ from AMC6
64	GND		First	Logic Ground	107	GND		First	Logic Ground
63	CLK1-5-	MCH	Third	CLK1- to AMC5	108	CLK2-5-	AMC-5	Third	CLK2- from AMC5
62	CLK1-5+	MCH	Third	CLK1+ to AMC5	109	CLK2-5+	AMC-5	Third	CLK2+ from AMC5
61	GND		First	Logic Ground	110	GND		First	Logic Ground
60	CLK1-4-	MCH	Third	CLK1- to AMC4	111	CLK2-4-	AMC-4	Third	CLK2- from AMC4
59	CLK1-4+	MCH	Third	CLK1+ to AMC4	112	CLK2-4+	AMC-4	Third	CLK2+ from AMC4
58	GND		First	Logic Ground	113	GND		First	Logic Ground
57	CLK1-3-	MCH	Third	CLK1- to AMC3	114	CLK2-3-	AMC-3	Third	CLK2- from AMC3
56	CLK1-3+	MCH	Third	CLK1+ to AMC3	115	CLK2-3+	AMC-3	Third	CLK2+ from AMC3
55	GND		First	Logic Ground	116	GND		First	Logic Ground
54	CLK1-2-	MCH	Third	CLK1- to AMC2	117	CLK2-2-	AMC-2	Third	CLK2- from AMC2
53	CLK1-2+	MCH	Third	CLK1+ to AMC2	118	CLK2-2+	AMC-2	Third	CLK2+ from AMC2
52	GND		First	Logic Ground	119	GND		First	Logic Ground
51	CLK1-1-	MCH	Third	CLK1- to AMC1	120	CLK2-1-	AMC-1	Third	CLK2- from AMC1
50	CLK1-1+	MCH	Third	CLK1+ to AMC1	121	CLK2-1+	AMC-1	Third	CLK2+ from AMC1
49	GND		First	Logic Ground	122	GND		First	Logic Ground
48	TxFB-12	MCH	Third	Fabric B to AMC12 Transmit-	123	RxFB-12	AMC-12	Third	Fabric B to AMC12 Receive-
47	TxFB-12+	MCH	Third	Fabric B to AMC12 Transmit+	124	RxFB-12+	AMC-12	Third	Fabric B to AMC12 Receive+
46	GND		First	Logic Ground	125	GND		First	Logic Ground
45	TxFB-11-	MCH	Third	Fabric B to AMC11 Transmit-	126	RxFB-11-	AMC-11	Third	Fabric B to AMC11 Receive-
44	TxFB-11+	MCH	Third	Fabric B to AMC11 Transmit+	127	RxFB-11+	AMC-11	Third	Fabric B to AMC11 Receive+
43	GND		First	Logic Ground	128	GND		First	Logic Ground
42	TxFB-10-	MCH	Third	Fabric B to AMC10 Transmit-	129	RxFB-10-	AMC-10	Third	Fabric B to AMC10 Receive-
41	TxFB-10+	MCH	Third	Fabric B to AMC10 Transmit+	130	RxFB-10+	AMC-10	Third	Fabric B to AMC10 Receive+
40	GND		First	Logic Ground	131	GND		First	Logic Ground
39	TxFB-9-	MCH	Third	Fabric B to AMC9 Transmit-	132	RxFB-9-	AMC-9	Third	Fabric B to AMC9 Receive-
38	TxFB-9+	MCH	Third	Fabric B to AMC9 Transmit+	133	RxFB-9+	AMC-9	Third	Fabric B to AMC9 Receive+
37	GND		First	Logic Ground	134	GND		First	Logic Ground
36	TxFB-8-	MCH	Third	Fabric B to AMC8 Transmit-	135	RxFB-8-	AMC-8	Third	Fabric B to AMC8 Receive-
35	TxFB-8+	MCH	Third	Fabric B to AMC8 Transmit+	136	RxFB-8+	AMC-8	Third	Fabric B to AMC8 Receive+

Property of CERN - For Internal Use Only – External Distribution Prohibited

Table 6-8 MCH pin list, Connector 2 (continued)

Pin No.	Signal	Driven By	Mating	Pin Function on MCH	Pin No.	Signal	Driven By	Mating	Pin Function on MCH
34	GND		First	Logic Ground	137	GND		First	Logic Ground
33	TxFB-7-	MCH	Third	Fabric B to AMC7 Transmit-	138	RxFB-7-	AMC-7	Third	Fabric B to AMC7 Receive-
32	TxFB-7+	MCH	Third	Fabric B to AMC7 Transmit+	139	RxFB-7+	AMC-7	Third	Fabric B to AMC7 Receive+
31	GND		First	Logic Ground	140	GND		First	Logic Ground
30	TxFB-6-	MCH	Third	Fabric B to AMC6 Transmit-	141	RxFB-6-	AMC-6	Third	Fabric B to AMC6 Receive-
29	TxFB-6+	MCH	Third	Fabric B to AMC6 Transmit+	142	RxFB-6+	AMC-6	Third	Fabric B to AMC6 Receive+
28	GND		First	Logic Ground	143	GND		First	Logic Ground
27	TxFB-5-	MCH	Third	Fabric B to AMC5 Transmit-	144	RxFB-5-	AMC-5	Third	Fabric B to AMC5 Receive-
26	TxFB-5+	MCH	Third	Fabric B to AMC5 Transmit+	145	RxFB-5+	AMC-5	Third	Fabric B to AMC5 Receive+
25	GND		First	Logic Ground	146	GND		First	Logic Ground
24	TxFB-4-	MCH	Third	Fabric B to AMC4 Transmit-	147	RxFB-4-	AMC-4	Third	Fabric B to AMC4 Receive-
23	TxFB-4+	MCH	Third	Fabric B to AMC4 Transmit+	148	RxFB-4+	AMC-4	Third	Fabric B to AMC4 Receive+
22	GND		First	Logic Ground	149	GND		First	Logic Ground
21	TxFB-3-	MCH	Third	Fabric B to AMC3 Transmit-	150	RxFB-3-	AMC-3	Third	Fabric B to AMC3 Receive-
20	TxFB-3+	MCH	Third	Fabric B to AMC3 Transmit+	151	RxFB-3+	AMC-3	Third	Fabric B to AMC3 Receive+
19	GND		First	Logic Ground	152	GND		First	Logic Ground
18	TxFB-2-	MCH	Third	Fabric B to AMC2 Transmit-	153	RxFB-2-	AMC-2	Third	Fabric B to AMC2 Receive-
17	TxFB-2+	MCH	Third	Fabric B to AMC2 Transmit+	154	RxFB-2+	AMC-2	Third	Fabric B to AMC2 Receive+
16	GND		First	Logic Ground	155	GND		First	Logic Ground
15	TxFB-1-	MCH	Third	Fabric B to AMC1 Transmit-	156	RxFB-1-	AMC-1	Third	Fabric B to AMC1 Receive-
14	TxFB-1+	MCH	Third	Fabric B to AMC1 Transmit+	157	RxFB-1+	AMC-1	Third	Fabric B to AMC1 Receive+
13	GND		First	Logic Ground	158	GND		First	Logic Ground
12	CLK1_Tx-	MCH	Third	CLK1 Update Transmit-	159	CLK1_Rx-	Other MCH	Third	CLK1 Update Receive-
11	CLK1_Tx+	MCH	Third	CLK1 Update Transmit+	160	CLK1_Rx+	Other MCH	Third	CLK1 Update Receive+
10	GND		First	Logic Ground	161	GND		First	Logic Ground
9	TxFUB-	MCH	Third	Fabric Update Transmit-	162	RxFUB-	Other MCH	Third	Fabric Update Receive-
8	TxFUB+	MCH	Third	Fabric Update Transmit+	163	RxFUB+	Other MCH	Third	Fabric Update Receive+
7	GND		First	Logic Ground	164	GND		First	Logic Ground
6	RSVD		Third		165	RSVD		Third	
5	RSVD		Third		166	RSVD		Third	
4	GND		Third	Logic Ground	167	GND		Third	Logic Ground
3	RSVD		Third		168	RSVD		Third	
2	RSVD		Third		169	RSVD		Third	
1	GND		First	Logic Ground	170	GND		First	Logic Ground

Table 6-9 MCH pin list, Connector 3

Pin No.	Signal	Driven By	Mating	Pin Function on MCH	Pin No.	Signal	Driven By	Mating	Pin Function on MCH
85	GND		First	Logic Ground	86	GND		First	Logic Ground
84	TxFG-6-	MCH	Third	Fabric G to AMC6 Transmit-	87	RxFG-6-	AMC-6	Third	Fabric G to AMC6 Receive-
83	TxFG-6+	MCH	Third	Fabric G to AMC6 Transmit+	88	RxFG-6+	AMC-6	Third	Fabric G to AMC6 Receive+
82	GND		First	Logic Ground	89	GND		First	Logic Ground
81	TxFF-6-	MCH	Third	Fabric F to AMC6 Transmit-	90	RxFF-6-	AMC-6	Third	Fabric F to AMC6 Receive-
80	TxFF-6+	MCH	Third	Fabric F to AMC6 Transmit+	91	RxFF-6+	AMC-6	Third	Fabric F to AMC6 Receive+
79	GND		First	Logic Ground	92	GND		First	Logic Ground
78	TxFE-6-	MCH	Third	Fabric E to AMC6 Transmit-	93	RxFE-6-	AMC-6	Third	Fabric E to AMC6 Receive-
77	TxFE-6+	MCH	Third	Fabric E to AMC6 Transmit+	94	RxFE-6+	AMC-6	Third	Fabric E to AMC6 Receive+
76	GND		First	Logic Ground	95	GND		First	Logic Ground
75	TxFD-6-	MCH	Third	Fabric D to AMC6 Transmit-	96	RxFD-6-	AMC-6	Third	Fabric D to AMC6 Receive-
74	TxFD-6+	MCH	Third	Fabric D to AMC6 Transmit+	97	RxFD-6+	AMC-6	Third	Fabric D to AMC6 Receive+
73	GND		First	Logic Ground	98	GND		First	Logic Ground
72	TxFG-5-	MCH	Third	Fabric G to AMC5 Transmit-	99	RxFG-5-	AMC-5	Third	Fabric G to AMC5 Receive-
71	TxFG-5+	MCH	Third	Fabric G to AMC5 Transmit+	100	RxFG-5+	AMC-5	Third	Fabric G to AMC5 Receive+
70	GND		First	Logic Ground	101	GND		First	Logic Ground
69	TxFF-5-	MCH	Third	Fabric F to AMC5 Transmit-	102	RxFF-5-	AMC-5	Third	Fabric F to AMC5 Receive-
68	TxFF-5+	MCH	Third	Fabric F to AMC5 Transmit+	103	RxFF-5+	AMC-5	Third	Fabric F to AMC5 Receive+
67	GND		First	Logic Ground	104	GND		First	Logic Ground
66	TxFE-5-	MCH	Third	Fabric E to AMC5 Transmit-	105	RxFE-5-	AMC-5	Third	Fabric E to AMC5 Receive-
65	TxFE-5+	MCH	Third	Fabric E to AMC5 Transmit+	106	RxFE-5+	AMC-5	Third	Fabric E to AMC5 Receive+
64	GND		First	Logic Ground	107	GND		First	Logic Ground
63	TxFD-5-	MCH	Third	Fabric D to AMC5 Transmit-	108	RxFD-5-	AMC-5	Third	Fabric D to AMC5 Receive-
62	TxFD-5+	MCH	Third	Fabric D to AMC5 Transmit+	109	RxFD-5+	AMC-5	Third	Fabric D to AMC5 Receive+
61	GND		First	Logic Ground	110	GND		First	Logic Ground
60	TxFG-4-	MCH	Third	Fabric G to AMC4 Transmit-	111	RxFG-4-	AMC-4	Third	Fabric G to AMC4 Receive-
59	TxFG-4+	MCH	Third	Fabric G to AMC4 Transmit+	112	RxFG-4+	AMC-4	Third	Fabric G to AMC4 Receive+
58	GND		First	Logic Ground	113	GND		First	Logic Ground
57	TxFF-4-	MCH	Third	Fabric F to AMC4 Transmit-	114	RxFF-4-	AMC-4	Third	Fabric F to AMC4 Receive-
56	TxFF-4+	MCH	Third	Fabric F to AMC4 Transmit+	115	RxFF-4+	AMC-4	Third	Fabric F to AMC4 Receive+
55	GND		First	Logic Ground	116	GND		First	Logic Ground
54	TxFE-4-	MCH	Third	Fabric E to AMC4 Transmit-	117	RxFE-4-	AMC-4	Third	Fabric E to AMC4 Receive-
53	TxFE-4+	MCH	Third	Fabric E to AMC4 Transmit+	118	RxFE-4+	AMC-4	Third	Fabric E to AMC4 Receive+

Property of CERN - For Internal Use Only – External Distribution Prohibited

Table 6-9 MCH pin list, Connector 3 (continued)

Pin No.	Signal	Driven By	Mating	Pin Function on MCH	Pin No.	Signal	Driven By	Mating	Pin Function on MCH
52	GND		First	Logic Ground	119	GND		First	Logic Ground
51	TxFD-4	MCH	Third	Fabric D to AMC4 Transmit-	120	RxFD-4	AMC-4	Third	Fabric D to AMC4 Receive-
50	TxFD-4+	MCH	Third	Fabric D to AMC4 Transmit+	121	RxFD-4+	AMC-4	Third	Fabric D to AMC4 Receive+
49	GND		First	Logic Ground	122	GND		First	Logic Ground
48	TxFG-3-	MCH	Third	Fabric G to AMC3 Transmit-	123	RxFG-3-	AMC-3	Third	Fabric G to AMC3 Receive-
47	TxFG-3+	MCH	Third	Fabric G to AMC3 Transmit+	124	RxFG-3+	AMC-3	Third	Fabric G to AMC3 Receive+
46	GND		First	Logic Ground	125	GND		First	Logic Ground
45	TxFF-3-	MCH	Third	Fabric F to AMC3 Transmit-	126	RxFF-3-	AMC-3	Third	Fabric F to AMC3 Receive-
44	TxFF-3+	MCH	Third	Fabric F to AMC3 Transmit+	127	RxFF-3+	AMC-3	Third	Fabric F to AMC3 Receive+
43	GND		First	Logic Ground	128	GND		First	Logic Ground
42	TxFE-3-	MCH	Third	Fabric E to AMC3 Transmit-	129	RxFE-3-	AMC-3	Third	Fabric E to AMC3 Receive-
41	TxFE-3+	MCH	Third	Fabric E to AMC3 Transmit+	130	RxFE-3+	AMC-3	Third	Fabric E to AMC3 Receive+
40	GND		First	Logic Ground	131	GND		First	Logic Ground
39	TxFD-3-	MCH	Third	Fabric D to AMC3 Transmit-	132	RxFD-3-	AMC-3	Third	Fabric D to AMC3 Receive-
38	TxFD-3+	MCH	Third	Fabric D to AMC3 Transmit+	133	RxFD-3+	AMC-3	Third	Fabric D to AMC3 Receive+
37	GND		First	Logic Ground	134	GND		First	Logic Ground
36	TxFG-2-	MCH	Third	Fabric G to AMC2 Transmit-	135	RxFG-2-	AMC-2	Third	Fabric G to AMC2 Receive-
35	TxFG-2+	MCH	Third	Fabric G to AMC2 Transmit+	136	RxFG-2+	AMC-2	Third	Fabric G to AMC2 Receive+
34	GND		First	Logic Ground	137	GND		First	Logic Ground
33	TxFF-2-	MCH	Third	Fabric F to AMC2 Transmit-	138	RxFF-2-	AMC-2	Third	Fabric F to AMC2 Receive-
32	TxFF-2+	MCH	Third	Fabric F to AMC2 Transmit+	139	RxFF-2+	AMC-2	Third	Fabric F to AMC2 Receive+
31	GND		First	Logic Ground	140	GND		First	Logic Ground
30	TxFE-2-	MCH	Third	Fabric E to AMC2 Transmit-	141	RxFE-2-	AMC-2	Third	Fabric E to AMC2 Receive-
29	TxFE-2+	MCH	Third	Fabric E to AMC2 Transmit+	142	RxFE-2+	AMC-2	Third	Fabric E to AMC2 Receive+
28	GND		First	Logic Ground	143	GND		First	Logic Ground
27	TxFD-2-	MCH	Third	Fabric D to AMC2 Transmit-	144	RxFD-2-	AMC-2	Third	Fabric D to AMC2 Receive-
26	TxFD-2+	MCH	Third	Fabric D to AMC2 Transmit+	145	RxFD-2+	AMC-2	Third	Fabric D to AMC2 Receive+
25	GND		First	Logic Ground	146	GND		First	Logic Ground
24	TxFG-1-	MCH	Third	Fabric G to AMC1 Transmit-	147	RxFG-1-	AMC-1	Third	Fabric G to AMC1 Receive-
23	TxFG-1+	MCH	Third	Fabric G to AMC1 Transmit+	148	RxFG-1+	AMC-1	Third	Fabric G to AMC1 Receive+
22	GND		First	Logic Ground	149	GND		First	Logic Ground
21	TxFF-1-	MCH	Third	Fabric F to AMC1 Transmit-	150	RxFF-1-	AMC-1	Third	Fabric F to AMC1 Receive-
20	TxFF-1+	MCH	Third	Fabric F to AMC1 Transmit+	151	RxFF-1+	AMC-1	Third	Fabric F to AMC1 Receive+
19	GND		First	Logic Ground	152	GND		First	Logic Ground
18	TxFE-1-	MCH	Third	Fabric E to AMC1 Transmit-	153	RxFE-1-	AMC-1	Third	Fabric E to AMC1 Receive-
17	TxFE-1+	MCH	Third	Fabric E to AMC1 Transmit+	154	RxFE-1+	AMC-1	Third	Fabric E to AMC1 Receive+
16	GND		First	Logic Ground	155	GND		First	Logic Ground
15	TxFD-1-	MCH	Third	Fabric D to AMC1 Transmit-	156	RxFD-1-	AMC-1	Third	Fabric D to AMC1 Receive-
14	TxFD-1+	MCH	Third	Fabric D to AMC1 Transmit+	157	RxFD-1+	AMC-1	Third	Fabric D to AMC1 Receive+
13	GND		First	Logic Ground	158	GND		First	Logic Ground
12	TxFUE-	MCH	Third	Update Channel E, Transmit-	159	RxFUE-	Other MCH	Third	Update Channel E, Receive-
11	TxFUE+	MCH	Third	Update Channel E, Transmit+	160	RxFUE+	Other MCH	Third	Update Channel E, Receive+
10	GND		First		161	GND		First	
9	TxFUD-	MCH	Third	Update Channel D, Transmit-	162	RxFUD-	Other MCH	Third	Update Channel D, Receive-
8	TxFUD+	MCH	Third	Update Channel D, Transmit+	163	RxFUD+	Other MCH	Third	Update Channel D, Receive+
7	GND		First		164	GND		First	
6	RSVD		Third		165	RSVD		Third	
5	RSVD		Third		166	RSVD		Third	
4	GND		Third		167	GND		Third	
3	RSVD		Third		168	RSVD		Third	
2	RSVD		Third		169	RSVD		Third	
1	GND		First		170	GND		First	

Table 6-10 MCH pin list, Connector 4

Pin No.	Signal	Driven By	Mating	Pin Function on MCH	Pin No.	Signal	Driven By	Mating	Pin Function on MCH
85	GND		First	Logic Ground	86	GND		First	Logic Ground
84	TxFG-12-	MCH	Third	Fabric G to AMC12 Transmit-	87	RxFG-12-	AMC-12	Third	Fabric G to AMC12 Receive-
83	TxFG-12+	MCH	Third	Fabric G to AMC12 Transmit+	88	RxFG-12+	AMC-12	Third	Fabric G to AMC12 Receive+
82	GND		First	Logic Ground	89	GND		First	Logic Ground
81	TxFF-12-	MCH	Third	Fabric F to AMC12 Transmit-	90	RxFF-12-	AMC-12	Third	Fabric F to AMC12 Receive-
80	TxFF-12+	MCH	Third	Fabric F to AMC12 Transmit+	91	RxFF-12+	AMC-12	Third	Fabric F to AMC12 Receive+
79	GND		First	Logic Ground	92	GND		First	Logic Ground
78	TxFE-12-	MCH	Third	Fabric E to AMC12 Transmit-	93	RxFE-12-	AMC-12	Third	Fabric E to AMC12 Receive-
77	TxFE-12+	MCH	Third	Fabric E to AMC12 Transmit+	94	RxFE-12+	AMC-12	Third	Fabric E to AMC12 Receive+
76	GND		First	Logic Ground	95	GND		First	Logic Ground
75	TxFD-12-	MCH	Third	Fabric D to AMC12 Transmit-	96	RxFD-12-	AMC-12	Third	Fabric D to AMC12 Receive-
74	TxFD-12+	MCH	Third	Fabric D to AMC12 Transmit+	97	RxFD-12+	AMC-12	Third	Fabric D to AMC12 Receive+
73	GND		First	Logic Ground	98	GND		First	Logic Ground
72	TxFG-11-	MCH	Third	Fabric G to AMC11 Transmit-	99	RxFG-11-	AMC-11	Third	Fabric G to AMC11 Receive-
71	TxFG-11+	MCH	Third	Fabric G to AMC11 Transmit+	100	RxFG-11+	AMC-11	Third	Fabric G to AMC11 Receive+

Property of CERN - For Internal Use Only – External Distribution Prohibited

Table 6-10 MCH pin list, Connector 4 (continued)

Pin No.	Signal	Driven By	Mating	Pin Function on MCH	Pin No.	Signal	Driven By	Mating	Pin Function on MCH
70	GND		First	Logic Ground	101	GND		First	Logic Ground
69	TxFF-11-	MCH	Third	Fabric F to AMC11 Transmit-	102	RxFF-11-	AMC-11	Third	Fabric F to AMC11 Receive-
68	TxFF-11+	MCH	Third	Fabric F to AMC11 Transmit+	103	RxFF-11+	AMC-11	Third	Fabric F to AMC11 Receive+
67	GND		First	Logic Ground	104	GND		First	Logic Ground
66	TxFE-11-	MCH	Third	Fabric E to AMC11 Transmit-	105	RxFE-11-	AMC-11	Third	Fabric E to AMC11 Receive-
65	TxFE-11+	MCH	Third	Fabric E to AMC11 Transmit+	106	RxFE-11+	AMC-11	Third	Fabric E to AMC11 Receive+
64	GND		First	Logic Ground	107	GND		First	Logic Ground
63	TxFD-11-	MCH	Third	Fabric D to AMC11 Transmit-	108	RxFD-11-	AMC-11	Third	Fabric D to AMC11 Receive-
62	TxFD-11+	MCH	Third	Fabric D to AMC11 Transmit+	109	RxFD-11+	AMC-11	Third	Fabric D to AMC11 Receive+
61	GND		First	Logic Ground	110	GND		First	Logic Ground
60	TxFG-10-	MCH	Third	Fabric G to AMC10 Transmit-	111	RxFG-10-	AMC-10	Third	Fabric G to AMC10 Receive-
59	TxFG-10+	MCH	Third	Fabric G to AMC10 Transmit+	112	RxFG-10+	AMC-10	Third	Fabric G to AMC10 Receive+
58	GND		First	Logic Ground	113	GND		First	Logic Ground
57	TxFF-10-	MCH	Third	Fabric F to AMC10 Transmit-	114	RxFF-10-	AMC-10	Third	Fabric F to AMC10 Receive-
56	TxFF-10+	MCH	Third	Fabric F to AMC10 Transmit+	115	RxFF-10+	AMC-10	Third	Fabric F to AMC10 Receive+
55	GND		First	Logic Ground	116	GND		First	Logic Ground
54	TxFE-10-	MCH	Third	Fabric E to AMC10 Transmit-	117	RxFE-10-	AMC-10	Third	Fabric E to AMC10 Receive-
53	TxFE-10+	MCH	Third	Fabric E to AMC10 Transmit+	118	RxFE-10+	AMC-10	Third	Fabric E to AMC10 Receive+
52	GND		First	Logic Ground	119	GND		First	Logic Ground
51	TxFD-10	MCH	Third	Fabric D to AMC10 Transmit-	120	RxFD-10	AMC-10	Third	Fabric D to AMC10 Receive-
50	TxFD-10+	MCH	Third	Fabric D to AMC10 Transmit+	121	RxFD-10+	AMC-10	Third	Fabric D to AMC10 Receive+
49	GND		First	Logic Ground	122	GND		First	Logic Ground
48	TxFG-9-	MCH	Third	Fabric G to AMC9 Transmit-	123	RxFG-9-	AMC-9	Third	Fabric G to AMC9 Receive-
47	TxFG-9+	MCH	Third	Fabric G to AMC9 Transmit+	124	RxFG-9+	AMC-9	Third	Fabric G to AMC9 Receive+
46	GND		First	Logic Ground	125	GND		First	Logic Ground
45	TxFF-9-	MCH	Third	Fabric F to AMC9 Transmit-	126	RxFF-9-	AMC-9	Third	Fabric F to AMC9 Receive-
44	TxFF-9+	MCH	Third	Fabric F to AMC9 Transmit+	127	RxFF-9+	AMC-9	Third	Fabric F to AMC9 Receive+
43	GND		First	Logic Ground	128	GND		First	Logic Ground
42	TxFE-9-	MCH	Third	Fabric E to AMC9 Transmit-	129	RxFE-9-	AMC-9	Third	Fabric E to AMC9 Receive-
41	TxFE-9+	MCH	Third	Fabric E to AMC9 Transmit+	130	RxFE-9+	AMC-9	Third	Fabric E to AMC9 Receive+
40	GND		First	Logic Ground	131	GND		First	Logic Ground
39	TxFD-9-	MCH	Third	Fabric D to AMC9 Transmit-	132	RxFD-9-	AMC-9	Third	Fabric D to AMC9 Receive-
38	TxFD-9+	MCH	Third	Fabric D to AMC9 Transmit+	133	RxFD-9+	AMC-9	Third	Fabric D to AMC9 Receive+
37	GND		First	Logic Ground	134	GND		First	Logic Ground
36	TxFG-8-	MCH	Third	Fabric G to AMC8 Transmit-	135	RxFG-8-	AMC-8	Third	Fabric G to AMC8 Receive-
35	TxFG-8+	MCH	Third	Fabric G to AMC8 Transmit+	136	RxFG-8+	AMC-8	Third	Fabric G to AMC8 Receive+
34	GND		First	Logic Ground	137	GND		First	Logic Ground
33	TxFF-8-	MCH	Third	Fabric F to AMC8 Transmit-	138	RxFF-8-	AMC-8	Third	Fabric F to AMC8 Receive-
32	TxFF-8+	MCH	Third	Fabric F to AMC8 Transmit+	139	RxFF-8+	AMC-8	Third	Fabric F to AMC8 Receive+
31	GND		First	Logic Ground	140	GND		First	Logic Ground
30	TxFE-8-	MCH	Third	Fabric E to AMC8 Transmit-	141	RxFE-8-	AMC-8	Third	Fabric E to AMC8 Receive-
29	TxFE-8+	MCH	Third	Fabric E to AMC8 Transmit+	142	RxFE-8+	AMC-8	Third	Fabric E to AMC8 Receive+
28	GND		First	Logic Ground	143	GND		First	Logic Ground
27	TxFD-8-	MCH	Third	Fabric D to AMC8 Transmit-	144	RxFD-8-	AMC-8	Third	Fabric D to AMC8 Receive-
26	TxFD-8+	MCH	Third	Fabric D to AMC8 Transmit+	145	RxFD-8+	AMC-8	Third	Fabric D to AMC8 Receive+
25	GND		First	Logic Ground	146	GND		First	Logic Ground
24	TxFG-7-	MCH	Third	Fabric G to AMC7 Transmit-	147	RxFG-7-	AMC-7	Third	Fabric G to AMC7 Receive-
23	TxFG-7+	MCH	Third	Fabric G to AMC7 Transmit+	148	RxFG-7+	AMC-7	Third	Fabric G to AMC7 Receive+
22	GND		First	Logic Ground	149	GND		First	Logic Ground
21	TxFF-7-	MCH	Third	Fabric F to AMC7 Transmit-	150	RxFF-7-	AMC-7	Third	Fabric F to AMC7 Receive-
20	TxFF-7+	MCH	Third	Fabric F to AMC7 Transmit+	151	RxFF-7+	AMC-7	Third	Fabric F to AMC7 Receive+
19	GND		First	Logic Ground	152	GND		First	Logic Ground
18	TxFE-7-	MCH	Third	Fabric E to AMC7 Transmit-	153	RxFE-7-	AMC-7	Third	Fabric E to AMC7 Receive-
17	TxFE-7+	MCH	Third	Fabric E to AMC7 Transmit+	154	RxFE-7+	AMC-7	Third	Fabric E to AMC7 Receive+
16	GND		First	Logic Ground	155	GND		First	Logic Ground
15	TxFD-7-	MCH	Third	Fabric D to AMC7 Transmit-	156	RxFD-7-	AMC-7	Third	Fabric D to AMC7 Receive-
14	TxFD-7+	MCH	Third	Fabric D to AMC7 Transmit+	157	RxFD-7+	AMC-7	Third	Fabric D to AMC7 Receive+
13	GND		First	Logic Ground	158	GND		First	Logic Ground
12	TxFUG-	MCH	Third	Update Channel G, Transmit-	159	RxFUG-	Other MCH	Third	Update Channel G, Receive-
11	TxFUG+	MCH	Third	Update Channel G, Transmit+	160	RxFUG+	Other MCH	Third	Update Channel G, Receive+
10	GND		First		161	GND		First	
9	TxFUF-	MCH	Third	Update Channel F, Transmit-	162	RxFUF-	Other MCH	Third	Update Channel F, Receive-
8	TxFUF+	MCH	Third	Update Channel F, Transmit+	163	RxFUF+	Other MCH	Third	Update Channel F, Receive+
7	GND		First		164	GND		First	
6	RSVD		Third		165	RSVD		Third	
5	RSVD		Third		166	RSVD		Third	
4	GND		Third		167	GND		Third	
3	RSVD		Third		168	RSVD		Third	
2	RSVD		Third		169	RSVD		Third	
1	GND		First		170	GND		First	

Property of CERN - For Internal Use Only – External Distribution Prohibited

6.7.4.1 MCH Connector 2 usage examples

¶ 74 Alternative usage of Connector 2 may be used. Table 6-11 shows two alternate usages: one in which three clocks are distributed to the twelve AdvancedMCs and Fabric[B] is optionally partially provided to six AdvancedMCs; and one in which two Fabrics, Fabric[B] and Fabric[C], are distributed to the twelve AdvancedMCs.

Table 6-11 Alternate Connector 2 usages

3 Clock, partial Fabric					2 Fabric, no Clock			
Pin No.	Signal	Pin No.	Signal		Pin No.	Signal	Pin No.	Signal
85	GND	86	GND		85	GND	86	GND
84	CLK1-12-	87	CLK2-12-		84	TxFC-12	123	RxFC-12
83	CLK1-12+	88	CLK2-12+		83	TxFC-12+	124	RxFC-12+
82	GND	89	GND		82	GND	125	GND
81	CLK1-11-	90	CLK2-11-		81	TxFC-11-	126	RxFC-11-
80	CLK1-11+	91	CLK2-11+		80	TxFC-11+	127	RxFC-11+
79	GND	92	GND		79	GND	128	GND
78	CLK1-10-	93	CLK2-10-		78	TxFC-10-	129	RxFC-10-
77	CLK1-10+	94	CLK2-10+		77	TxFC-10+	130	RxFC-10+
76	GND	95	GND		76	GND	131	GND
75	CLK1-9-	96	CLK2-9-		75	TxFC-9-	132	RxFC-9-
74	CLK1-9+	97	CLK2-9+		74	TxFC-9+	133	RxFC-9+
73	GND	98	GND		73	GND	134	GND
72	CLK1-8-	99	CLK2-8-		72	TxFC-8-	135	RxFC-8-
71	CLK1-8+	100	CLK2-8+		71	TxFC-8+	136	RxFC-8+
70	GND	101	GND		70	GND	137	GND
69	CLK1-7-	102	CLK2-7-		69	TxFC-7-	138	RxFC-7-
68	CLK1-7+	103	CLK2-7+		68	TxFC-7+	139	RxFC-7+
67	GND	104	GND		67	GND	140	GND
66	CLK1-6-	105	CLK2-6-		66	TxFC-6-	141	RxFC-6-
65	CLK1-6+	106	CLK2-6+		65	TxFC-6+	142	RxFC-6+
64	GND	107	GND		64	GND	143	GND
63	CLK1-5-	108	CLK2-5-		63	TxFC-5-	144	RxFC-5-
62	CLK1-5+	109	CLK2-5+		62	TxFC-5+	145	RxFC-5+
61	GND	110	GND		61	GND	146	GND
60	CLK1-4-	111	CLK2-4-		60	TxFC-4-	147	RxFC-4-
59	CLK1-4+	112	CLK2-4+		59	TxFC-4+	148	RxFC-4+
58	GND	113	GND		58	GND	149	GND
57	CLK1-3-	114	CLK2-3-		57	TxFC-3-	150	RxFC-3-
56	CLK1-3+	115	CLK2-3+		56	TxFC-3+	151	RxFC-3+
55	GND	116	GND		55	GND	152	GND
54	CLK1-2-	117	CLK2-2-		54	TxFC-2-	153	RxFC-2-
53	CLK1-2+	118	CLK2-2+		53	TxFC-2+	154	RxFC-2+
52	GND	119	GND		52	GND	155	GND
51	CLK1-1-	120	CLK2-1-		51	TxFC-1-	156	RxFC-1-
50	CLK1-1+	121	CLK2-1+		50	TxFC-1+	157	RxFC-1+
49	GND	122	GND		49	GND	158	GND
48	CLK3-6-	123	CLK3-12-		48	TxFB-12	123	RxFB-12
47	CLK3-6+	124	CLK3-12+		47	TxFB-12+	124	RxFB-12+
46	GND	125	GND		46	GND	125	GND
45	CLK3-5-	126	CLK3-11-		45	TxFB-11-	126	RxFB-11-
44	CLK3-5+	127	CLK3-11+		44	TxFB-11+	127	RxFB-11+
43	GND	128	GND		43	GND	128	GND
42	CLK3-4-	129	CLK3-10-		42	TxFB-10-	129	RxFB-10-
41	CLK3-4+	130	CLK3-10+		41	TxFB-10+	130	RxFB-10+
40	GND	131	GND		40	GND	131	GND
39	CLK3-3-	132	CLK3-9-		39	TxFB-9-	132	RxFB-9-
38	CLK3-3+	133	CLK3-9+		38	TxFB-9+	133	RxFB-9+
37	GND	134	GND		37	GND	134	GND
36	CLK3-2-	135	CLK3-8-		36	TxFB-8-	135	RxFB-8-
35	CLK3-2+	136	CLK3-8+		35	TxFB-8+	136	RxFB-8+
34	GND	137	GND		34	GND	137	GND
33	CLK3-1-	138	CLK3-7-		33	TxFB-7-	138	RxFB-7-
32	CLK3-1+	139	CLK3-7+		32	TxFB-7+	139	RxFB-7+
31	GND	140	GND		31	GND	140	GND
30	TxFB-6-	141	RxFB-6-		30	TxFB-6-	141	RxFB-6-
29	TxFB-6+	142	RxFB-6+		29	TxFB-6+	142	RxFB-6+
28	GND	143	GND		28	GND	143	GND
27	TxFB-5-	144	RxFB-5-		27	TxFB-5-	144	RxFB-5-
26	TxFB-5+	145	RxFB-5+		26	TxFB-5+	145	RxFB-5+
25	GND	146	GND		25	GND	146	GND

Property of CERN - For Internal Use Only – External Distribution Prohibited

Table 6-11 Alternate Connector 2 usages (continued)

3 Clock, partial Fabric					2 Fabric, no Clock			
Pin No.	Signal	Pin No.	Signal		Pin No.	Signal	Pin No.	Signal
24	TxFB-4-	147	RxFB-4-		24	TxFB-4-	147	RxFB-4-
23	TxFB-4+	148	RxFB-4+		23	TxFB-4+	148	RxFB-4+
22	GND	149	GND		22	GND	149	GND
21	TxFB-3-	150	RxFB-3-		21	TxFB-3-	150	RxFB-3-
20	TxFB-3+	151	RxFB-3+		20	TxFB-3+	151	RxFB-3+
19	GND	152	GND		19	GND	152	GND
18	TxFB-2-	153	RxFB-2-		18	TxFB-2-	153	RxFB-2-
17	TxFB-2+	154	RxFB-2+		17	TxFB-2+	154	RxFB-2+
16	GND	155	GND		16	GND	155	GND
15	TxFB-1-	156	RxFB-1-		15	TxFB-1-	156	RxFB-1-
14	TxFB-1+	157	RxFB-1+		14	TxFB-1+	157	RxFB-1+
13	GND	158	GND		13	GND	158	GND
12	CLK1_Tx-	159	CLK1_Rx-		12	TxFUC-	159	RxFUC-
11	CLK1_Tx+	160	CLK1_Rx+		11	TxFUC+	160	RxFUC+
10	GND	161	GND		10	GND	161	GND
9	CLK3_Tx-	162	CLK3_Rx-		9	TxFUB-	162	RxFUB-
8	CLK3_Tx+	163	CLK3_Rx+		8	TxFUB+	163	RxFUB+
7	GND	164	GND		7	GND	164	GND
6	RSVD	165	RSVD		6	RSVD	165	RSVD
5	RSVD	166	RSVD		5	RSVD	166	RSVD
4	GND	167	GND		4	GND	167	GND
3	RSVD	168	RSVD		3	RSVD	168	RSVD
2	RSVD	169	RSVD		2	RSVD	169	RSVD
1	GND	170	GND		1	GND	170	GND

6.8 System examples

¶ 75 Given the flexibility of the AdvancedMC, a variety of system topologies are possible under the heading MicroTCA. A few example system topologies are presented here to guide system-level developers in the possibilities provided by the AdvancedMC and MicroTCA architecture.

6.8.1 Redundant MicroTCA system

¶ 76 The redundant MicroTCA system shown in Figure 6-14 and Figure 6-15 is based on the concept of a redundant MCH-based system, which provides all required support for the AdvancedMC Modules, Power Modules, and Cooling Modules. This example also shows the two-clock, one-fabric usage of MCH Connector 2. Functionality and interconnect are described as follows:

¶ 77 AdvancedMC

- IPMI and system management
- Switch fabric
- Synchronization clock distribution
- Test (JTAG) interface

Property of CERN - For Internal Use Only – External Distribution Prohibited

¶ 78 Power Module

- IPMI and system management
- Power distribution

¶ 79 Cooling Module

- IPMI and system management

¶ 80 MCH

- Update Channel
- fail-over signaling
- Management signaling

Property of CERN - For Internal Use Only – External Distribution Prohibited

Figure 6-14 Redundant MicroTCA system example

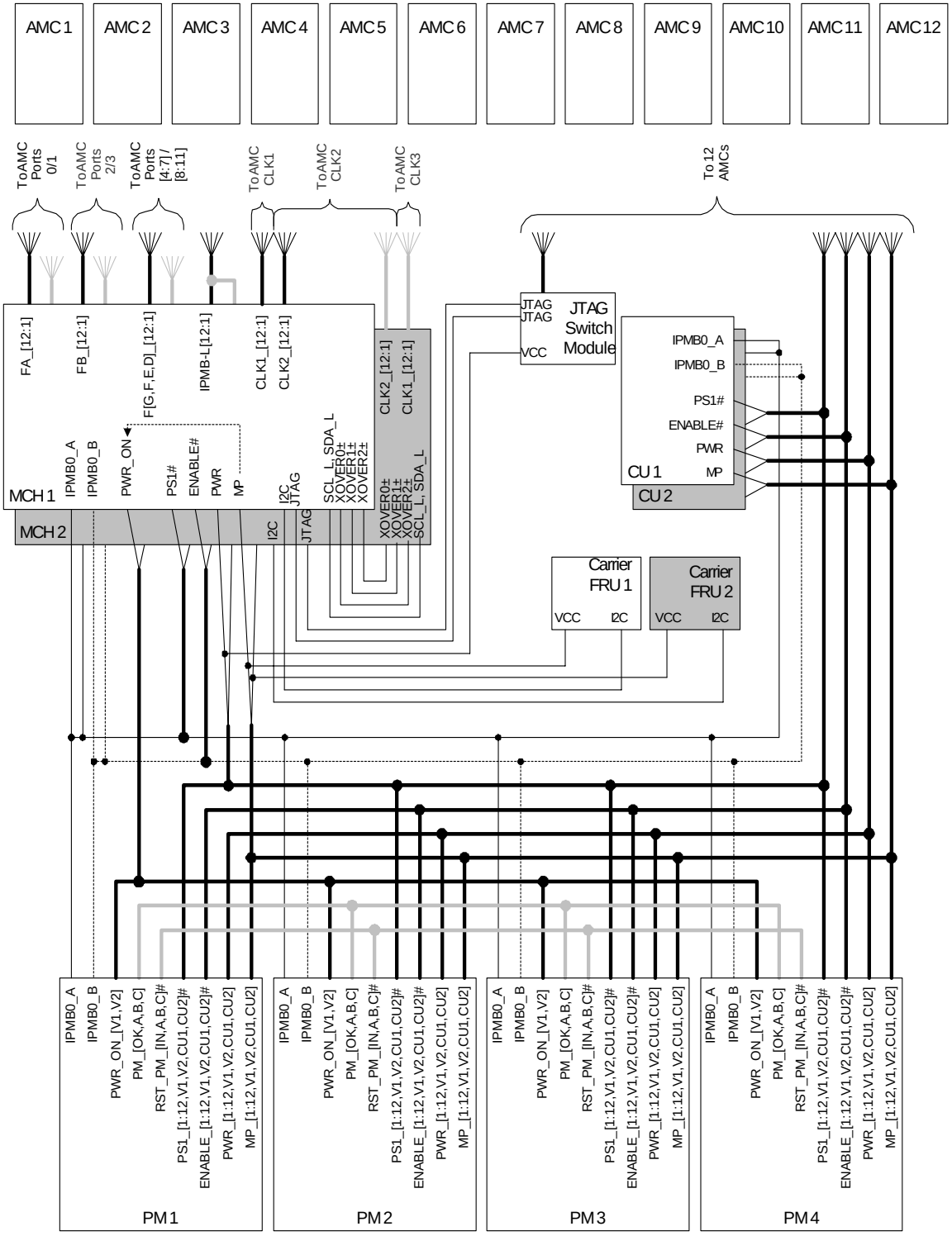

Property of CERN - For Internal Use Only – External Distribution Prohibited

Figure 6-15 Redundant MicroTCA Shelf example

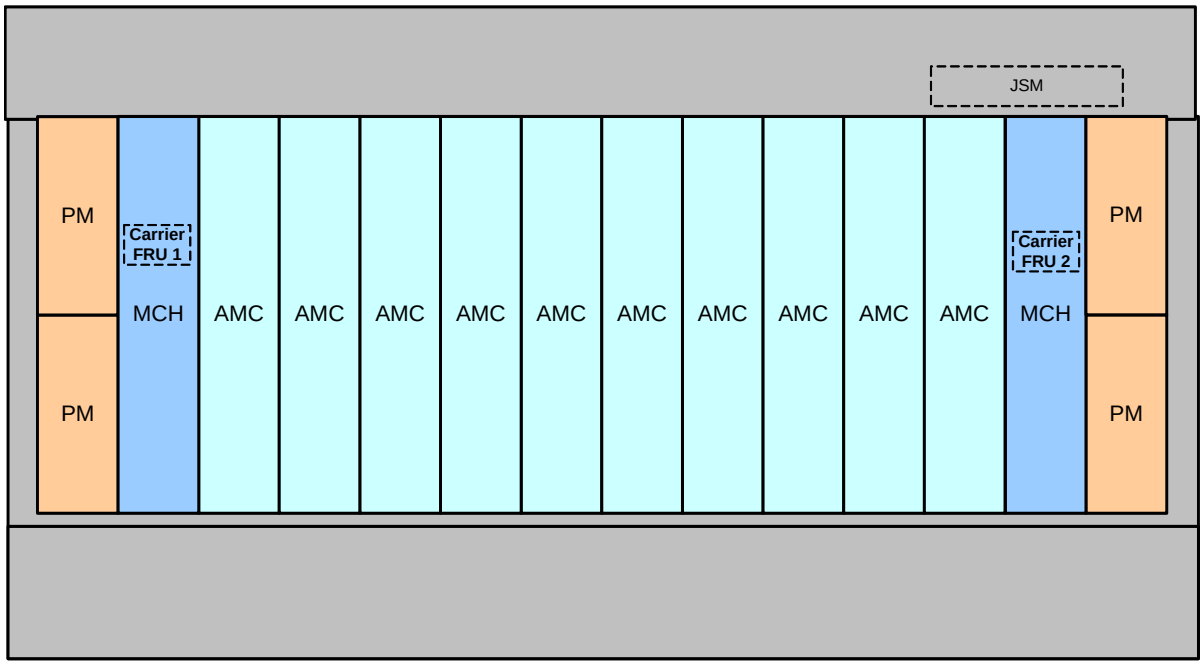

6.8.2 Variant redundant MicroTCA interconnect

¶ 81 The variant redundant MicroTCA System shown in Figure 6-16 is differentiated from the redundant MicroTCA system by the usage of MCH Connector 2. This system exemplifies the variant usage of MCH Connector 2, such that it provides two sets of fabric interface ports to the AdvancedMCs. This particular example shows a usage where Fabric[B] connects to Ports 2 and 3 of the AdvancedMC Common Options Region, and Fabric[C] connects to Ports 19 and 20 of the AdvancedMC Extended Options region.

Property of CERN - For Internal Use Only – External Distribution Prohibited

Figure 6-16 Variant redundant MicroTCA system example

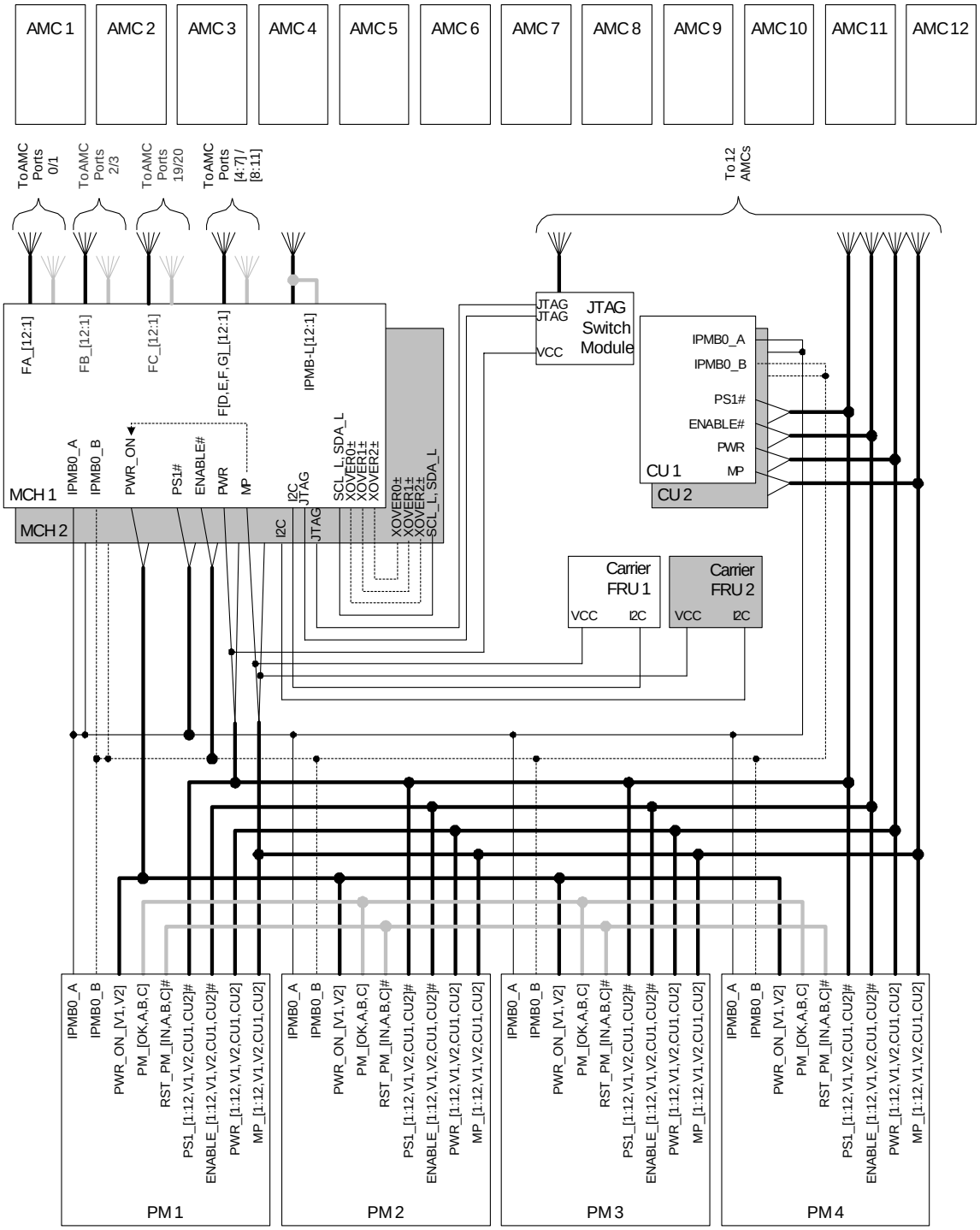

Property of CERN - For Internal Use Only – External Distribution Prohibited

6.8.2.1 Basic redundant MicroTCA system

¶ 82 The basic redundant MicroTCA System, shown in Figure 6-17 and Figure 6-18, is differentiated by the usage of only a single MCH Connector, Connector 1. This system is shown to exemplify the scalability of the MCH pin list, enabling the creation of very simple MCHs to provide management and fabric functionality. Since this example utilizes only MCH Connector 1, this example utilizes no clock distribution (which is provisioned on MCH Connector 2).

Property of CERN - For Internal Use Only – External Distribution Prohibited

Figure 6-17 Basic redundant MicroTCA system example

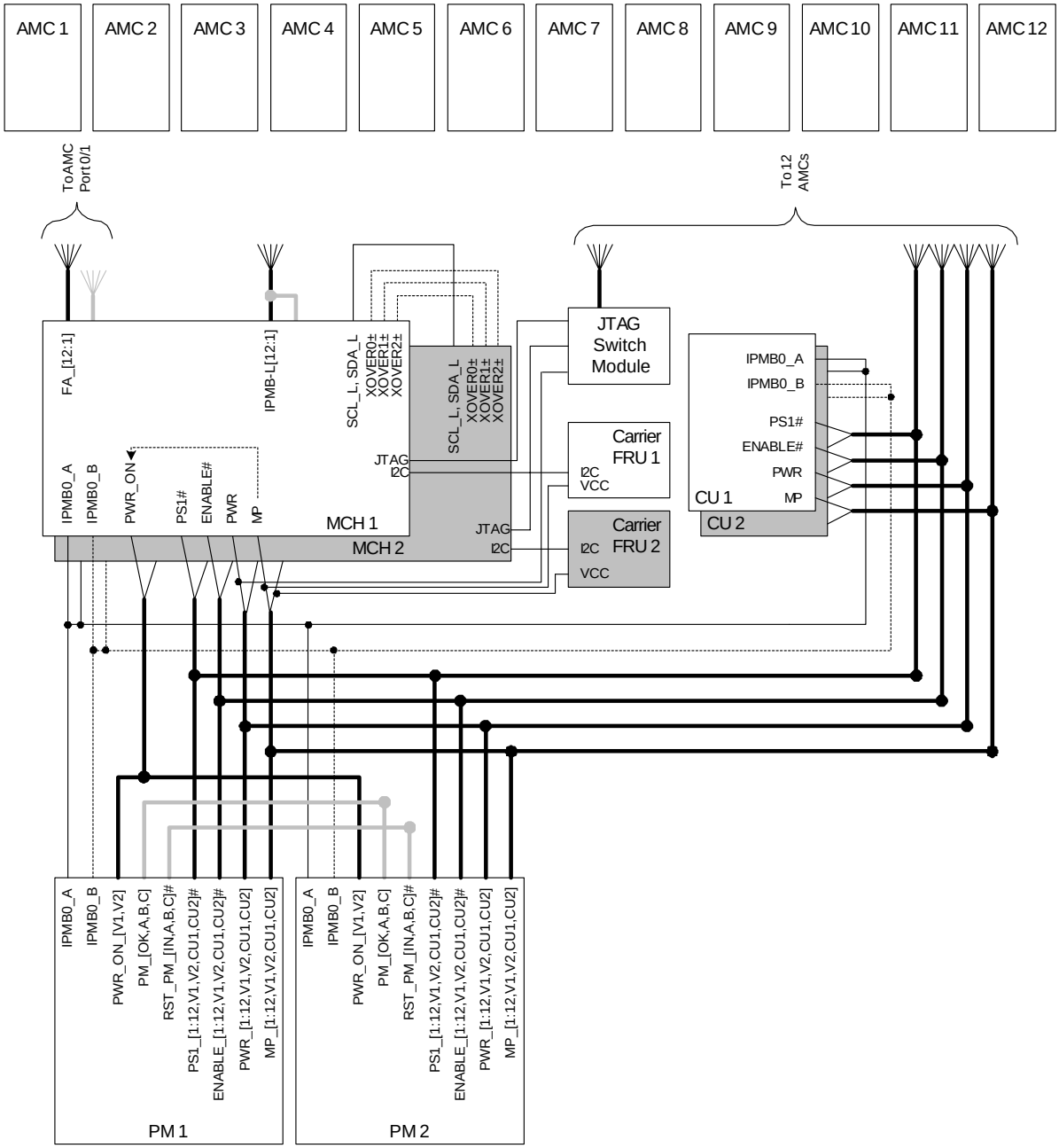

Property of CERN - For Internal Use Only – External Distribution Prohibited

Figure 6-18 Basic redundant MicroTCA Shelf example

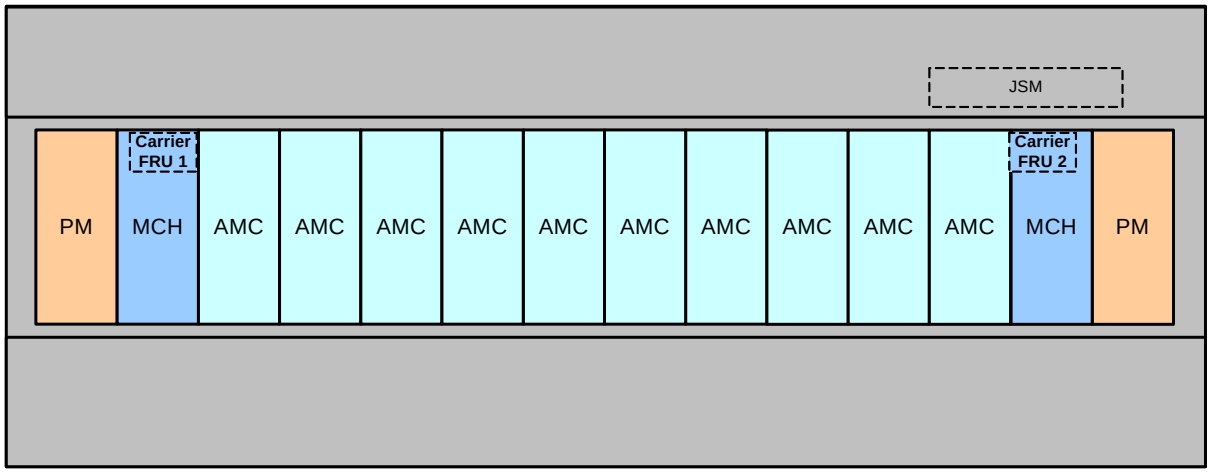

6.8.3 Non-redundant MicroTCA system

¶ 83 The non-redundant MicroTCA System, shown in Figure 6-19 and Figure 6-20, is differentiated by the presence of only a single MCH and single Power Module for systems with lower availability requirements. This example also shows the three-clock, no-fabric usage of MCH Connector 2.

Property of CERN - For Internal Use Only – External Distribution Prohibited

Figure 6-19 Non-redundant MicroTCA system example

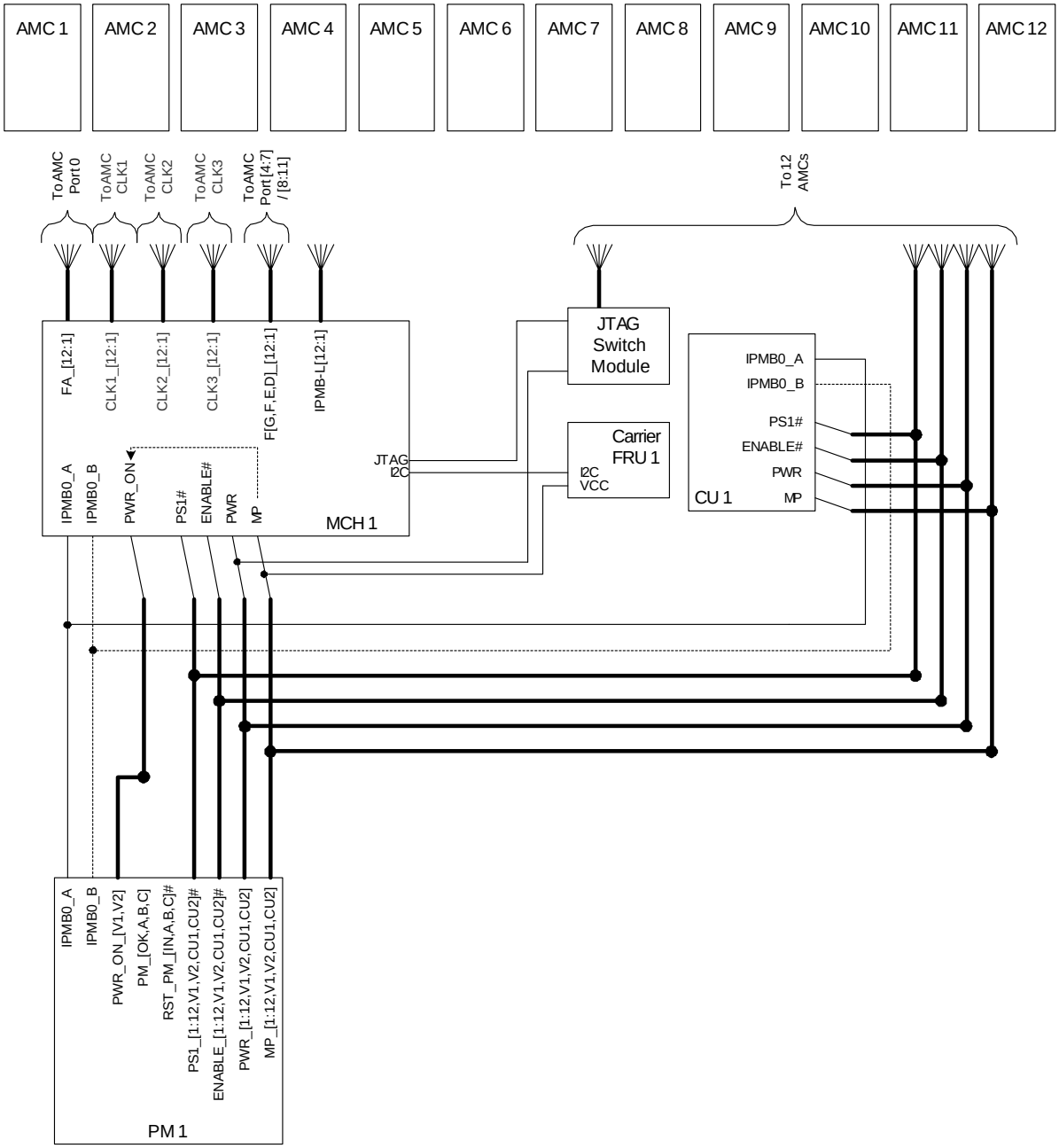

Property of CERN - For Internal Use Only – External Distribution Prohibited

Figure 6-20 Non-redundant MicroTCA Shelf example

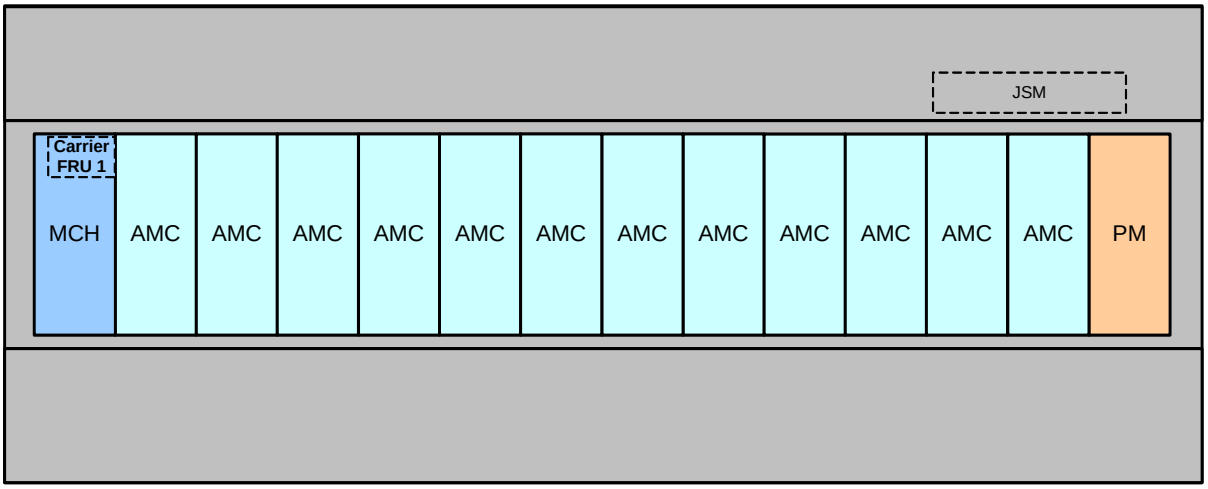

Property of CERN - For Internal Use Only – External Distribution Prohibited

Property of CERN - For Internal Use Only – External Distribution Prohibited

Connectors 7

7.1 General information

¶ 1 This section specifies the family of Connectors for MicroTCA systems which mount on the Backplane and the Modules. It specifies the AdvancedMC Backplane Connectors, the MicroTCA Carrier Hub Connectors, the power input/output Connectors, and any Auxiliary Connectors.

¶ 2 For the qualification and reliability assessment, the appropriate operational conditions of the Connectors are defined as follows:

Requirements

REQ 7.1 Connector **shall** comply with Telcordia GR-1217-CORE, Performance Level 4, System Quality Requirements III, and Quality level III, with exemption for product-specific requirements according to this specification.

REQ 7.2 The design of the interconnect systems **shall** be RoHS compliant.

7.2 AdvancedMC Backplane Connectors

¶ 3 The AdvancedMC Backplane Connector described in this section is designed to accept the AdvancedMC Modules, as specified in the AMC.0 specification.

¶ 4 The AdvancedMC Backplane Connector described in this section is designed to accept special version of tongue as well which does not have two side notches specified in AMC.0 specification.

Requirement

REQ 7.3 AdvancedMC Backplane Connector **shall** support the AdvancedMC, the special tongue which has straight side edges on AdvancedMC interface as shown in Figure 7-1 and the MCH plug which has reduced mating forces features described in Section 2, “Mechanical”.

Property of CERN - For Internal Use Only – External Distribution Prohibited

Figure 7-1 Straight side edges special mating interface

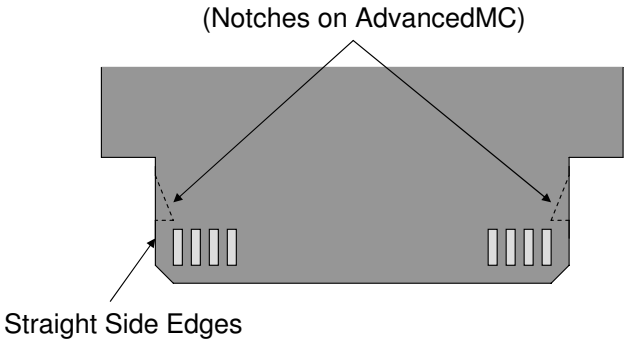

7.2.1 AdvancedMC Backplane Connector pin list

Table 7-1 Functional contact pin list of mating interface

Power	2, 9, 18, 27, 42, 57, 72, 84
Ground	1, 7, 10, 13, 16, 19, 22, 25, 28, 31, 34, 37, 40, 43, 46, 49, 52, 55, 58, 61, 64, 67, 70, 73, 76, 79, 82, 85, 86, 89, 92, 95, 98, 101, 104, 107, 110, 113, 116, 119, 122, 125, 128, 131, 134, 137, 140, 143, 146, 149, 152, 155, 158, 161, 164, 170
General purpose	3, 4, 5, 6, 8, 17, 26, 41, 56, 71, 83, 165, 166, 167, 168, 169
Differential pairs	11/12, 14/15, 20/21, 23/24, 29/30, 32/33, 35/36, 38/39, 44/45, 47/48, 50/51, 53/54, 59/60, 62/63, 65/66, 68/69, 74/75, 77/78, 80/81, 87/88, 90/91, 93/94, 96/97, 99/100, 102/103, 105/106, 108/109, 111/112, 114/115, 117/118, 120/121, 123/124, 126/127, 129/130, 132/133, 135/136, 138/139, 141/142, 144/145, 147/148, 150/151, 153/154, 156/157, 159/160, 162/163

Requirements

REQ 7.4 Mating interface of the AdvancedMC Backplane Connector **shall** follow the functional contact pin list as given in Table 7-1.

REQ 7.5 All or part of the fifty-six Ground interface pins **may** be connected together within a Connector.

7.2.2 AdvancedMC Backplane Connector dimensions

¶ 5 This section specifies three different mounting styles for AdvancedMC Backplane Connectors: compression-mount, solder surface-mount, and press-fit-mount.

¶ 6 Original dimensions are in millimeters, and all dimensions on the drawings and tables are in millimeters. The decimal point is used instead of the decimal comma.

¶ 7 All drawings are shown in third angle projection.

7.2.2.1 Compression Connector dimensions

¶ 8 The compression-mount Connector is screwed down onto the Backplane. This compresses the contacts on the rear of the Connector to make contact with the Backplane.

Property of CERN - For Internal Use Only – External Distribution Prohibited

¶ 9 In order to prevent uneven pressure on compression contacts, a stiffener plate is needed on rear of the Backplane.

¶ 10 The stiffener plate may be designed with individual separate pieces for each Connector or as one large plate for all Connectors as a part of the back side cover on the chassis.

Figure 7-2 Overall dimensions of compression-mount AdvancedMC Backplane Connector

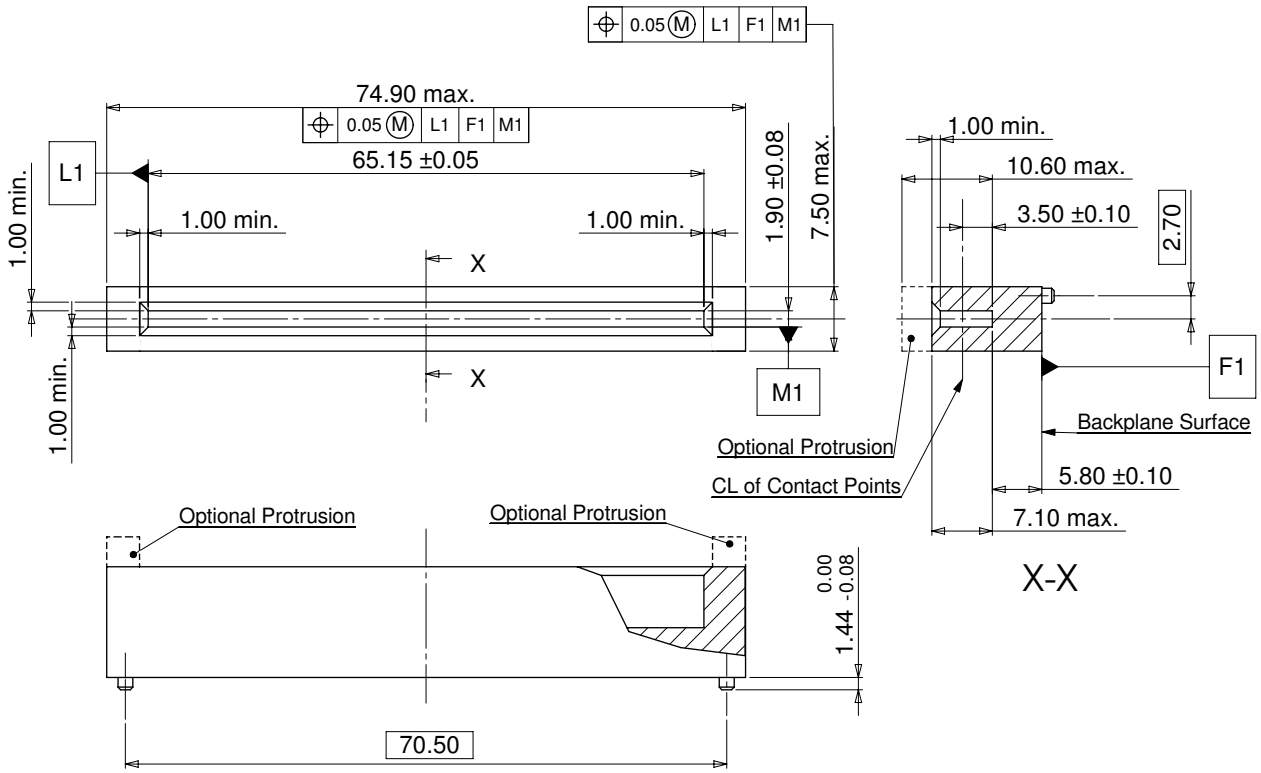

Requirements

REQ 7.6 In order to ensure the intended Connector functionality and compatibility, the compression-mount style Connector **shall** have dimensions specified in Figure 7-2.

REQ 7.7 The shape of the parts **may** deviate from the drawing in Figure 7-2, as long as the specified dimensions are not affected and the intended functionality is provided.

REQ 7.8 The compression-mount style Connector **shall** be able to perform with the PCB layout specified in Figure 7-6.

Property of CERN - For Internal Use Only – External Distribution Prohibited

Figure 7-3 Stiffener dimensions for each compression-mount AdvancedMC Connector

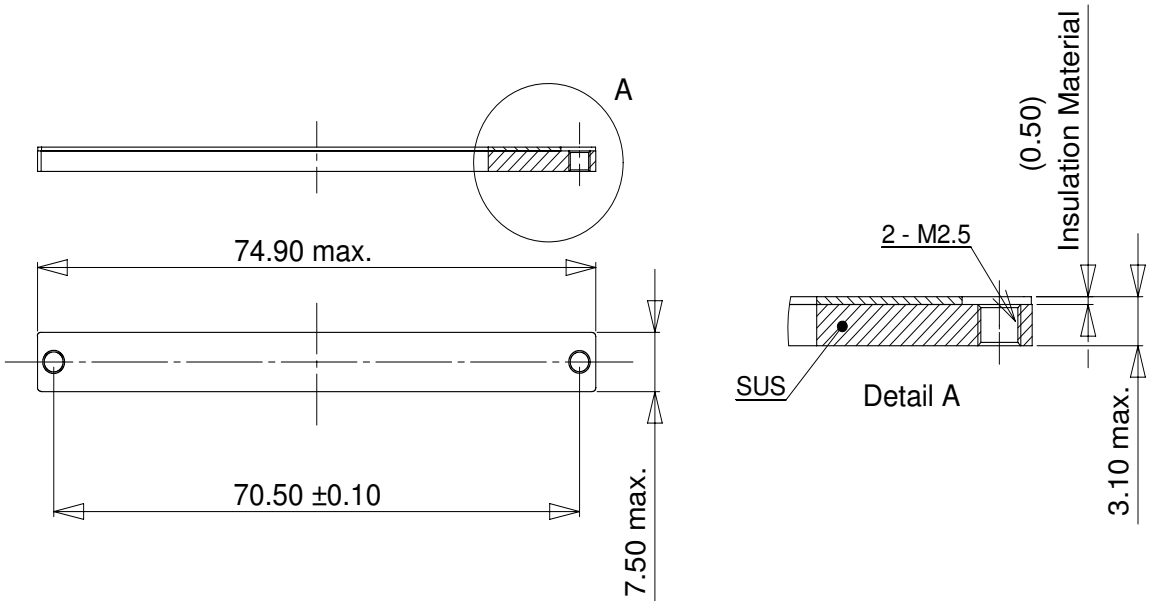

Requirements

REQ 7.9 The specification of the screws for the stiffener plate **shall** be provided by each Connector vendor.

REQ 7.10 The stiffener plate **should** be equipped with an insulating material between the stiffener plate and the Backplane to keep the stiffener plate at a distance from potential traces on the back side of Backplane.

REQ 7.11 The stiffener plate **shall** be connected to Logic GND.

REQ 7.12 The shape of the parts **may** deviate from the drawing in Figure 7-3, as long as the specified dimensions are not affected and the intended functionality is provided.

Property of CERN - For Internal Use Only – External Distribution Prohibited

7.2.2.2 Solder surface-mount Connector dimensions

Figure 7-4 Overall dimensions of solder surface-mount AdvancedMC Connector

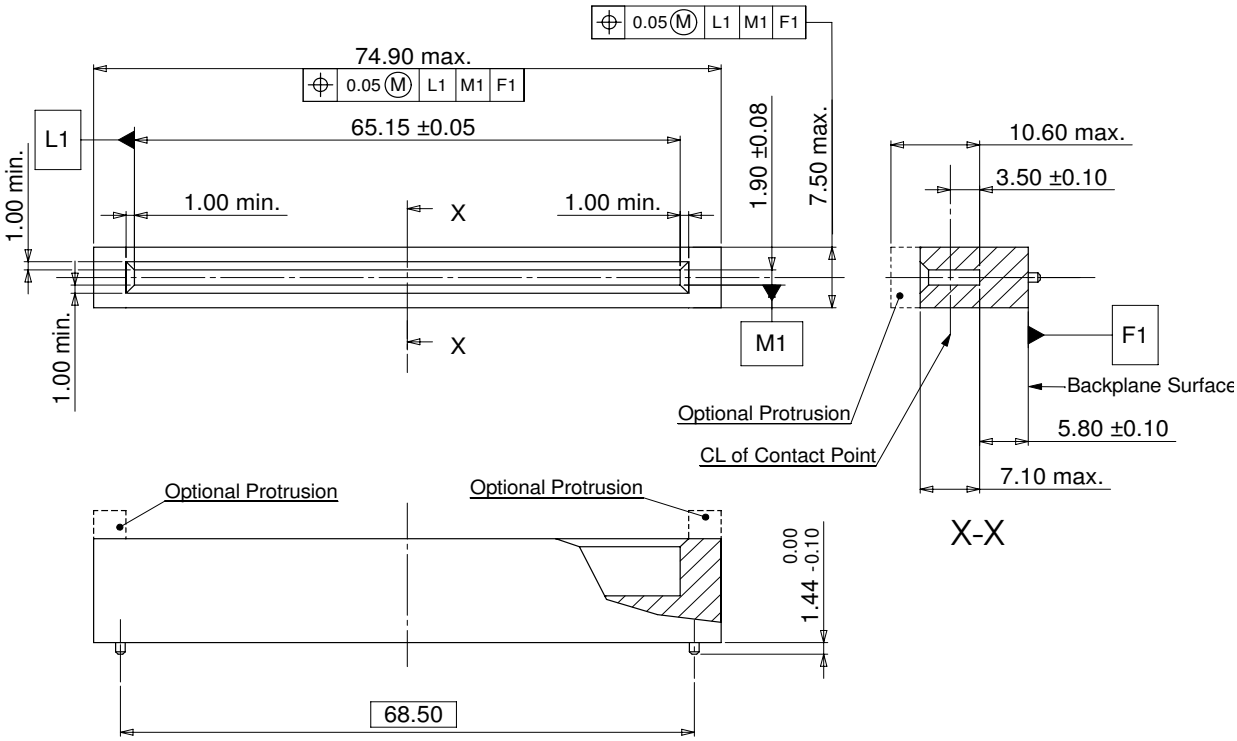

REQ 7.13 In order to ensure the intended Connector functionality and compatibility, the solder surface-mount style Connector **shall** have dimensions specified in Figure 7-4.

REQ 7.14 The shape of the parts **may** deviate from the drawing in Figure 7-4, as long as the specified dimensions are not affected and the intended functionality is provided.

REQ 7.15 The solder surface-mount style Connector **shall** be able to perform with the PCB layout shown in Figure 7-7.

Property of CERN - For Internal Use Only – External Distribution Prohibited

7.2.2.3 Press-fit Connector dimensions

Figure 7-5 Overall dimensions of press-fit AdvancedMC Connector

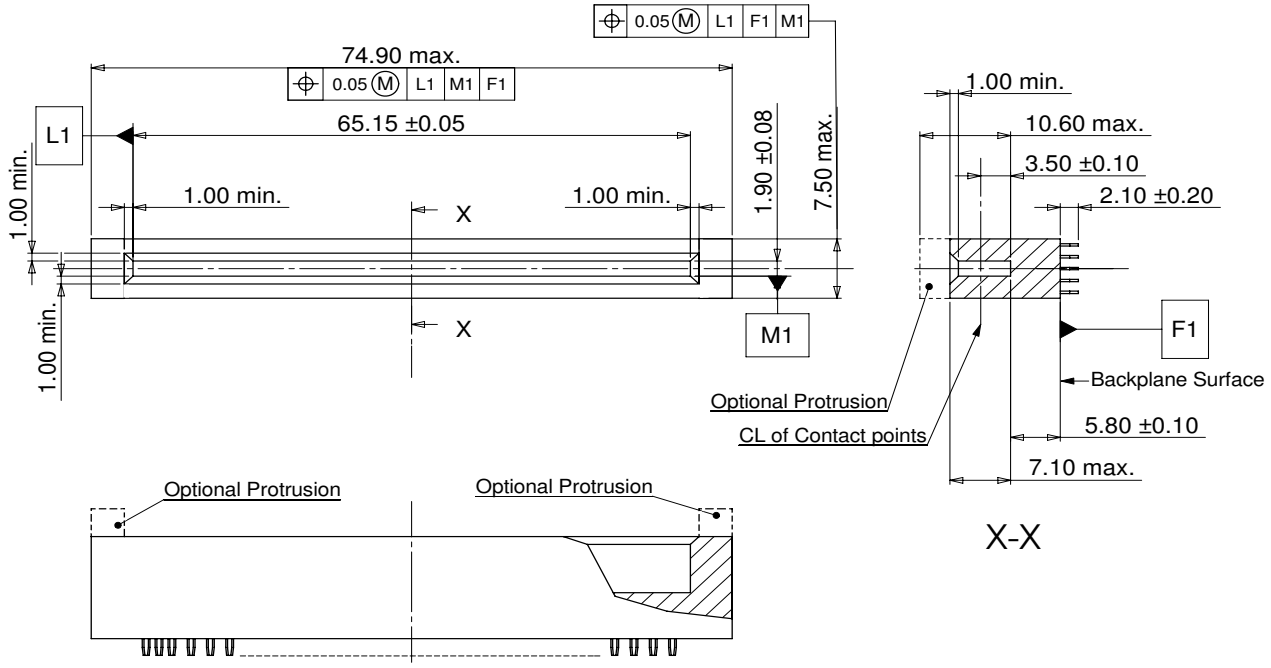

Requirements

REQ 7.16 In order to ensure the intended Connector functionality and compatibility, the press-fit style Connector **shall** have dimensions specified in Figure 7-5.

REQ 7.17 The shape of the parts **may** deviate from the drawing in Figure 7-5, as long as the specified dimensions are not affected and the intended functionality is provided.

REQ 7.18 The press-fit style Connector **shall** be able to perform with the PCB layout and the finished plated through hole shown in Figure 7-8.

7.2.3 AdvancedMC Backplane Connector PCB layout

¶ 11 This section specifies the PCB layout for three different mounting styles of AdvancedMC Backplane Connector: compression-mount, solder surface-mount, and press-fit-mount.

¶ 12 Original dimensions are in millimeters, and all dimensions on the drawings and tables are in millimeters.

¶ 13 All drawings are shown in the top view of the Connector-mount side.

Property of CERN - For Internal Use Only – External Distribution Prohibited

7.2.3.1 Compression-mount Connector PCB layout

Figure 7-6 Compression-mount Connector PCB layout

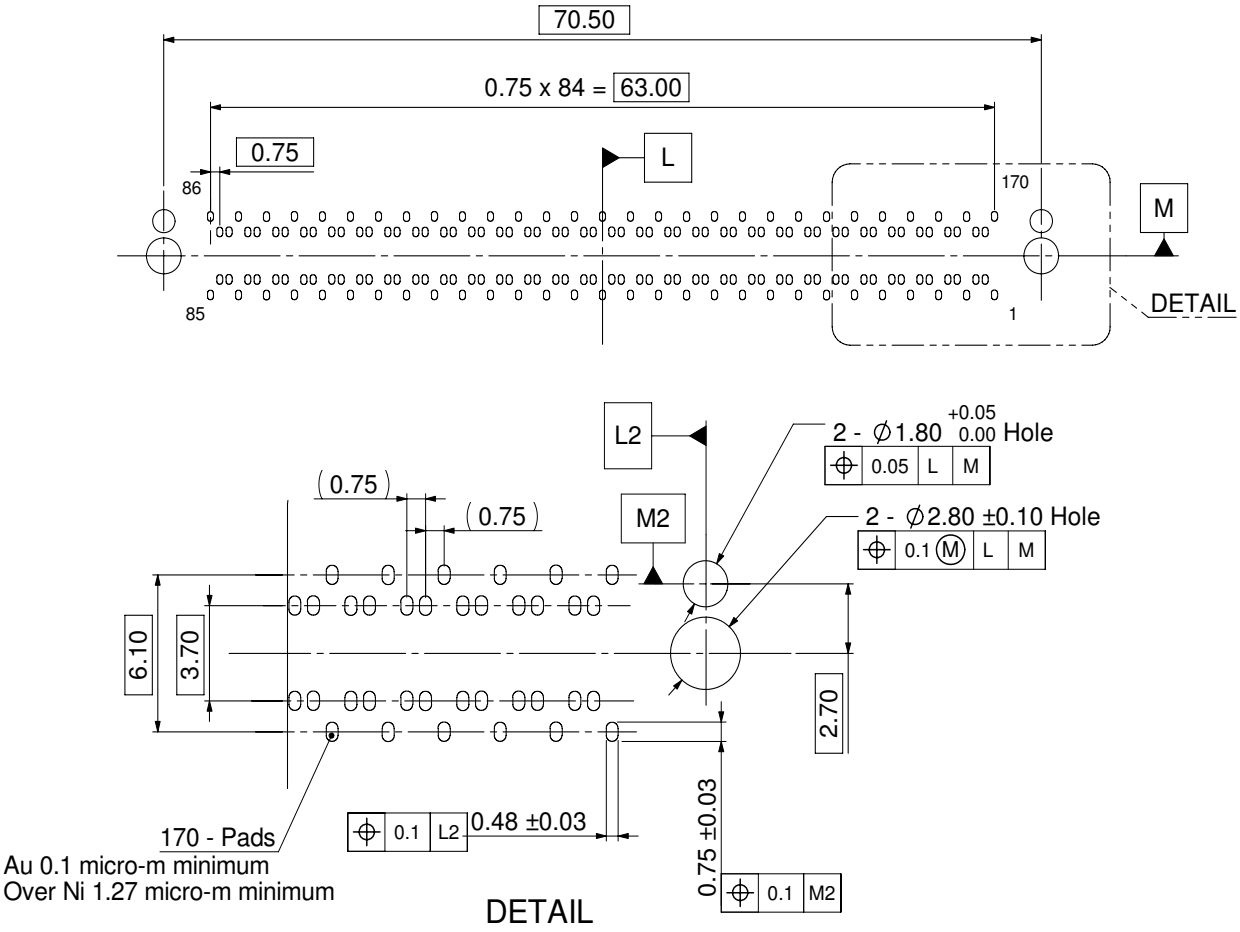

Requirement

REQ 7.19 In order to ensure the intended Connector functionality and compatibility, the Backplane PCB layout for the compression-mount style Connector **shall** have dimensions shown in Figure 7-6.

Property of CERN - For Internal Use Only – External Distribution Prohibited

7.2.3.2 Solder surface-mount Connector PCB layout

Figure 7-7 Surface-mount Connector PCB layout

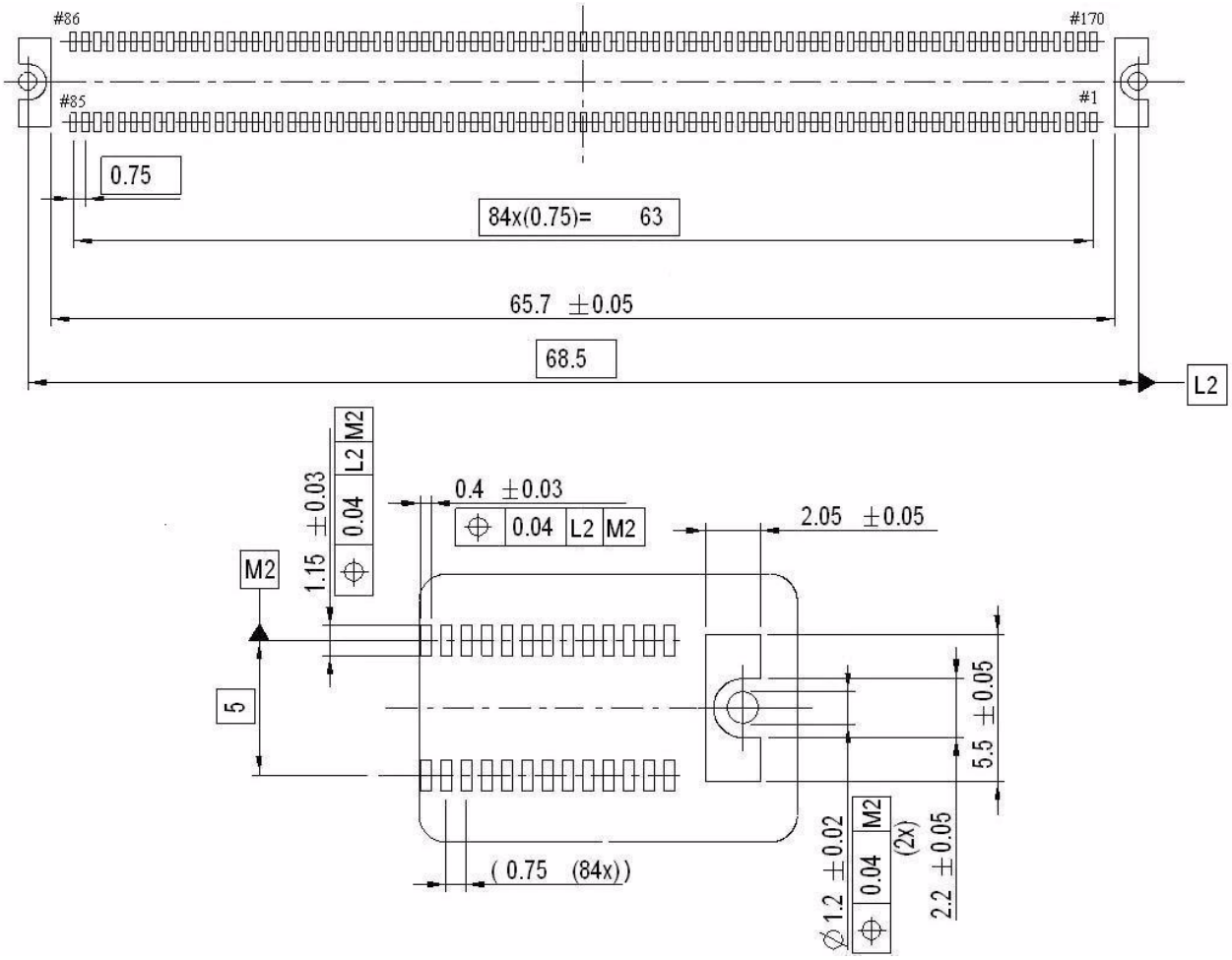

Requirement

REQ 7.20 In order to ensure the intended Connector functionality and compatibility, the Backplane PCB layout for the solder surface-mount style Connector **shall** have dimensions shown in Figure 7-7.

Property of CERN - For Internal Use Only – External Distribution Prohibited

7.2.3.3 Press-fit Connector PCB layout

Figure 7-8 Press-fit Connector PCB layout

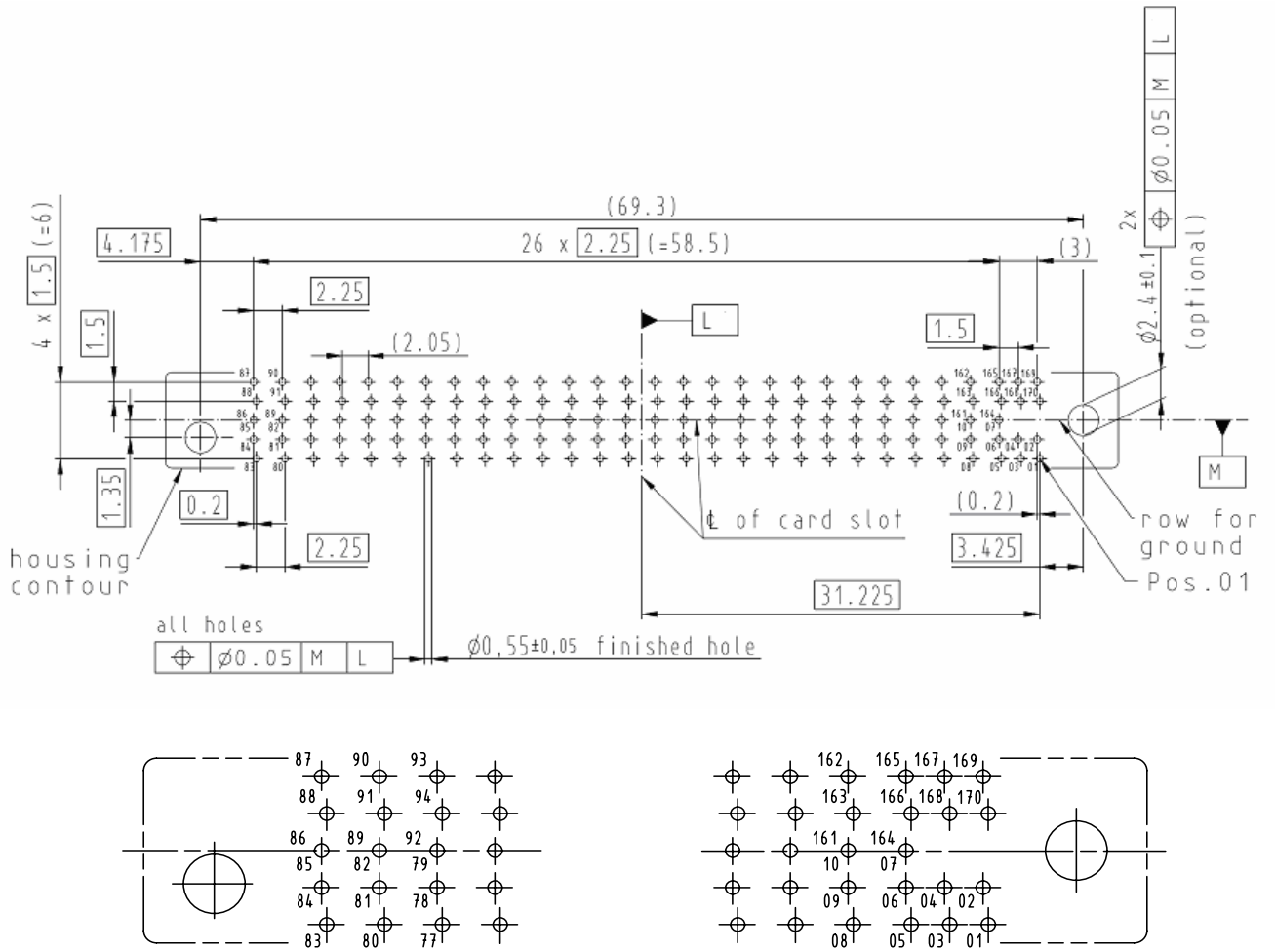

Figure 7-9 Plated through-hole cross section

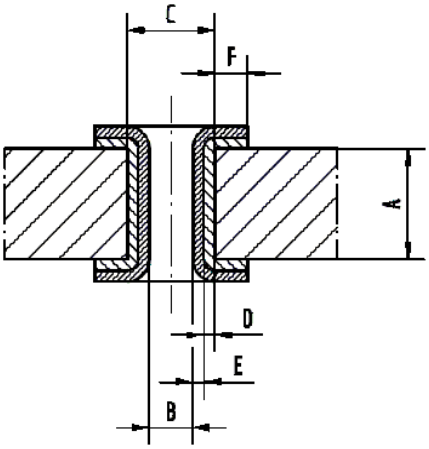

Property of CERN - For Internal Use Only – External Distribution Prohibited

Table 7-2 Plated through-hole dimensions

	Item	Dimension
A	PCB Thickness	Minimum 1.4 mm
B	Plated Through Hole Diameter	Refer to Figure 7-8
C	Drill Hole Diameter	0.64 +/- 0.02 mm
D	Cu Thickness	Minimum 25 µm
E	Plating Thickness (Other material and thickness of plating may be used based on both RoHS compliance and connector vendor's agreement)	(Minimum 0.8 µm Chem. Sn) (0.05 - 0.12 µm Au, Over 3.0 - 7.0 µm Ni) (0.1 - 0.3 µm Ag)
F	Pad Width	Minimum 0.15 mm

Requirements

REQ 7.21 In order to ensure the intended Connector functionality and compatibility, the Backplane PCB layout and finished plated through hole diameter for the press-fit style Connector **shall** have dimensions shown in Figure 7-8.

REQ 7.22 The plated through hole **should** have dimensions shown in Figure 7-9 and Table 7-2

7.2.4 AdvancedMC Backplane Connector electrical characteristics

7.2.4.1 Creepage clearance

Condition: IEC 60664-1

Table 7-3 Creepage clearance distances

	Differential pairs	General purpose	Power section
Between signal and signal	Minimum 0.1 mm	Minimum 0.1 mm	Minimum 0.1 mm
Between signal and Ground	Minimum 0.1 mm	Minimum 0.1 mm	Minimum 0.1 mm

Requirements

REQ 7.23 Under the conditions stated in Table 7-3, all Creepage and clearance distances between all conductors inside the AdvancedMC Backplane Connector **shall** be minimum of 0.1 mm.

REQ 7.24 Connectors **shall** provide a minimum of 100 V insulation between Logic Ground and Shelf Ground, in case of any conductive materials on the connector connected to Shelf Ground.

Property of CERN - For Internal Use Only – External Distribution Prohibited

7.2.4.2 Insulation voltage-proof

Conditions: IEC 60512-4-1
Standard atmospheric conditions
Mated and unmated Module PCB
Wiring arrangement according to Section 7.7.1.2, "Specimen Set 2: Insulation resistance and voltage-proofing measurement."

Table 7-4 Rated insulation voltages

	Insulation voltage	Pollution degree (IEC 60664-1)
Diff. pair signal to signal	80 V r.m.s.	1 (inside Connector)
Diff. pair signal to Ground	80 V r.m.s.	1 (inside Connector)
Gen. purpose signal to signal	80 V r.m.s.	1 (inside Connector)
Gen. purpose signal to Ground	80 V r.m.s.	1 (inside Connector)
Power to power	80 V r.m.s.	1 (inside Connector)
Power to Ground	80 V r.m.s.	1 (inside Connector)

Requirement

REQ 7.25 Under the conditions stated in Table 7-4, all insulation voltages between all the conductors inside the AdvancedMC Connector **shall** be minimum of 80 V r.m.s.

7.2.4.3 Current-carrying capacity

Conditions: IEC 60512-5-2
Standard atmospheric conditions
Wiring arrangement in Figure 7-39
Temperature curves for each conductor listed in Table 7-5 to be measured with all other conductor currents given in Table 7-38, to account for the co-heating effect to other types of conductor

Table 7-5 Current-carrying capability

	Current rating (With Derating of IEC 60512)	Connector Capability	Temperature rise
General purpose conductor	0.40 A/Pin	0.50 A/Pin	30°C Maximum
Ground conductor	0.30 A/Pin	0.375 A/Pin	30°C Maximum
Power conductor	1.52 A/Pin	1.9 A//Pin	30°C Maximum
Differential pairs conductor	0.1 A/Pin	0.125 A//Pin	30°C Maximum

Property of CERN - For Internal Use Only – External Distribution Prohibited

Requirements

REQ 7.26 AdvancedMC Backplane Connector **shall** be able to perform at a 100 °C temperature condition, which includes a 30 °C temperature rise by current distribution from 70 °C maximum ambient temperature.

REQ 7.27 Under the conditions stated above and Table 7-5, the current-carrying capability of each general-purpose conductor inside the AdvancedMC Backplane Connector **shall** be 0.5 A minimum, which includes a 20% margin on rated current in accordance with IEC 60512-5-2.

REQ 7.28 Under the conditions stated above and Table 7-5, the current-carrying capability of each Ground conductor inside the AdvancedMC Backplane Connector **shall** be 0.375 A minimum, which includes a 20% margin on rated current in accordance with IEC 60512-5-2.

REQ 7.29 Under the conditions stated above and Table 7-5, the current-carrying capability of each power conductor inside the AdvancedMC Backplane Connector **shall** be 1.9 A minimum, which includes a 20% margin on rated current in accordance with IEC 60512-5-2.

REQ 7.30 Under the conditions stated above and Table 7-5, the current-carrying capability of each differential pairs conductor inside the AdvancedMC Backplane Connector **shall** be 0.125A minimum, which includes a 20% margin on rated current in accordance with IEC 60512-5-2.

REQ 7.31 Connector design **shall** ensure that no contact exceeds its current rating due to current balancing caused by variations in contact resistance.

7.2.4.4 Line resistance

Conditions: IEC 60512-2-1
Standard atmospheric conditions
Mated Module PCB
Connecting points as specified Section 7.7.1.1, “Specimen Set 1: Contact resistance measurement.”

Table 7-6 Maximum line resistances

	Maximum initial line resistance	Maximum change in relation to initial value
Differential pair conductors	25 milli Ohms	10 milli Ohms
Ground conductors	25 milli Ohms	10 milli Ohms
General purpose conductors	25 milli Ohms	10 milli Ohms
Power conductors	25 milli Ohms	10 milli Ohms

Requirements

REQ 7.32 The line resistance of the various conductors **shall not** exceed the values given in Table 7-6.

Property of CERN - For Internal Use Only – External Distribution Prohibited

REQ 7.33 Some groups of power conductors **may** be used in parallel for high current.

REQ 7.34 In order to avoid excessive current in the lower resistance lines, the difference in line resistance between the parallel power conductors in a connector **shall not** exceed ±20% of the average line resistance of the group during all test sequences.

7.2.4.5 Insulation resistance

Conditions: IEC 60512-3-1
Standard atmospheric conditions
Method B; see arrangement in Table 7-7.
Mated Module PCB
Test voltage 80 V r.m.s.

Table 7-7 Minimum insulation resistances

	Initial value	After moisture
Differential pair conductor/conductor	100M Ohms	10M Ohms
Differential pair conductor/Ground	100M Ohms	10M Ohms
General purpose conductor/conductor	100M Ohms	10M Ohms
General purpose conductor/Ground	100M Ohms	10M Ohms
Power conductor/Ground	100M Ohms	10M Ohms
Power conductor/general purpose	100M Ohms	10M Ohms

Requirements

REQ 7.35 Under the conditions stated above, the minimum initial insulation resistance between conductors, as defined in Table 7-7, **shall** be 100M Ohms.

REQ 7.36 After applying the moisture tests specified in Section 7.7.2.3, “Group C - Thermal shock and moisture”, the minimum insulation resistance **shall not** drop below 10M Ohms.

7.2.4.6 Inductance

Requirement

REQ 7.37 The line inductance of the power and the ground conductors inside the AdvancedMC Backplane Connector **shall** be 30 nH maximum.

¶ 14 Dynamic behavior for the other conductors is controlled under Section 7.2.5, “AdvancedMC Backplane Connector high-speed characteristics”.

Property of CERN - For Internal Use Only – External Distribution Prohibited

7.2.4.7 Engagement under electrical load

Requirement

REQ 7.38 All contacts **shall** tolerate 200 cycles of powered engagement into a load exhibiting an input characteristic of 5 V at 0.2 A maximum current without degradation of the Connector performance.

7.2.5 AdvancedMC Backplane Connector high-speed characteristics

Note: High speed signal characteristic requirements on the AdvancedMC Backplane Connector may have future refinements which will be based on the analysis of the allowable connector loss budget for 12.5 Gbps single lane signal transmission on the entire channel.

7.2.5.1 Differential impedance

Conditions: IEC 60512-23-4
Test method B
Measurement area = Figure 7-44
Specimen environment impedance = 100 Ohms differential
Input step rise time (20% – 80%) 25 ps maximum to the measurement point defined in Figure 7-44
Adjacent lines terminated at both ends

Requirements

REQ 7.39 Under the conditions stated above, the differential impedance peak values of the AdvancedMC Backplane Connector including contact pads, thru-holes, and traces routing out from Connector region **should** stay within a tolerance band of 100 Ohms, ±10 Ohms as shown in Figure 7-10, at all layers used for high-speed signal routing.

REQ 7.40 The test data **shall** be reported with description of test fixture information listed in Table 7-39.

Property of CERN - For Internal Use Only – External Distribution Prohibited

Figure 7-10 Typical impedance profile, including connections (example for guidance only)

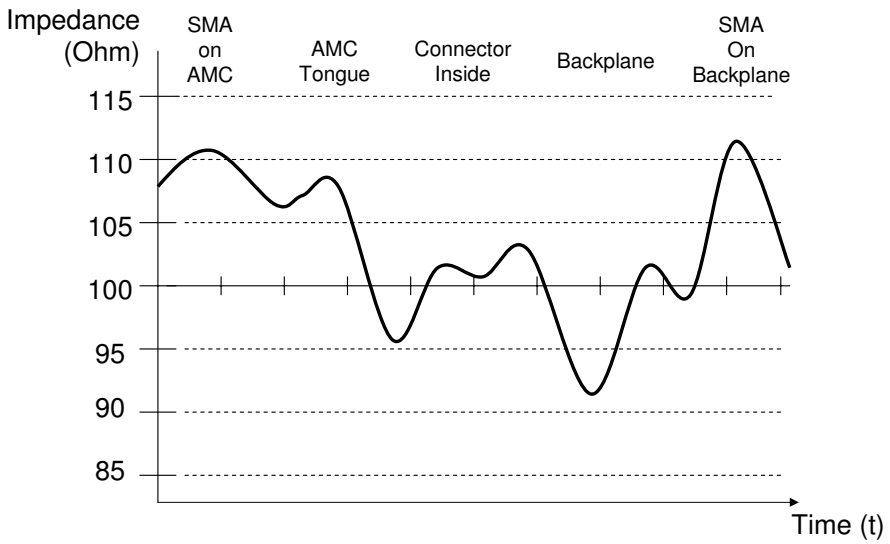

7.2.5.2 Differential return loss

Conditions: IEC 60512-25-5
Method A time domain
Measurement area = Figure 7-44
Specimen environment impedance = 100 Ohms differential
Adjacent lines terminated at both ends

Requirements

REQ 7.41 Under the conditions stated above, the differential loss profile of the AdvancedMC Backplane Connector including contact pads, thru-holes, and traces routing out from Connector region **should** be less than –20 dB at 5 GHz, less than –13 dB at 8 GHz, and less than –8 dB at 14.5 GHz as shown in Figure 7-11, at all layers used for high-speed signal routing.

REQ 7.42 The test data **shall** be reported with description of test fixture information listed in Table 7-39.

Property of CERN - For Internal Use Only – External Distribution Prohibited

Figure 7-11 Typical return loss profile, including connections (example for guidance only)

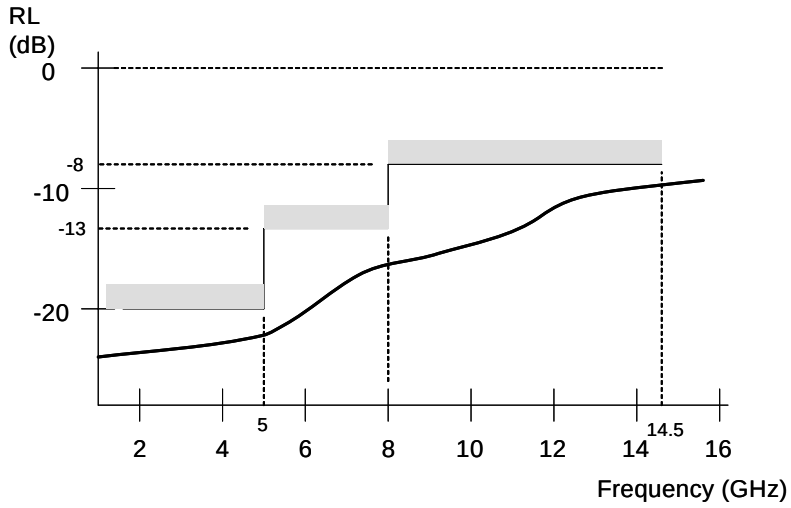

7.2.5.3 Differential attenuation

Conditions: IEC 60512-25-2
Measurement area = Figure 7-44
Specimen environment impedance = 100 Ohms differential
Adjacent lines terminated at both ends

Requirements

REQ 7.43 Under the conditions stated above, the differential attenuation profile of the AdvancedMC Backplane Connector including contact pads, thru-holes and traces routing out from Connector region **should** be greater than –1 dB at 6.5 GHz, greater than –2 dB at 12 GHz and greater than –4 dB at 14.5 GHz as shown in Figure 7-12, at the all layers used for high-speed signal routing.

REQ 7.44 The test data **shall** be reported with description of test fixture information listed in Table 7-39.

Property of CERN - For Internal Use Only – External Distribution Prohibited

Figure 7-12 Typical attenuation profile, including connections (example for guidance only)

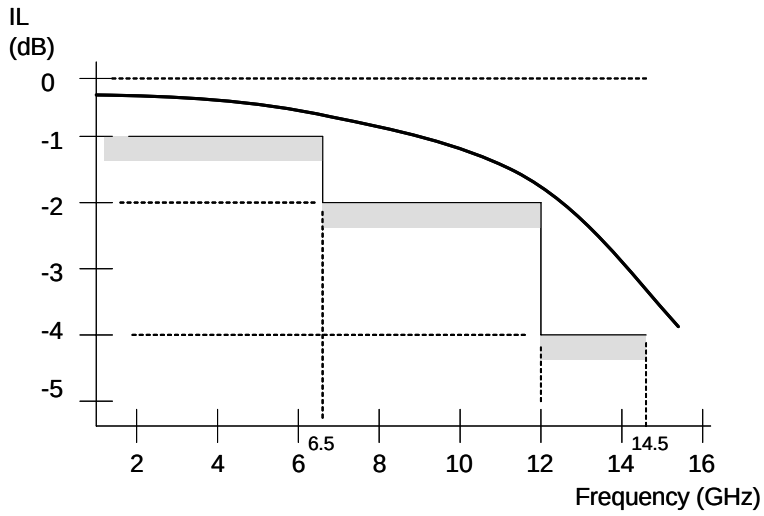

7.2.5.4 Differential pair cross-talk

Conditions: IEC 60512-25-1
Method A time domain
Measurement area = Figure 7-44
Specimen environment impedance = 100 Ohms differential
Input step rise time (20% – 80%) 25 ps maximum to measurement point defined in Figure 7-44
Multi aggressor condition = Figure 7-48

Requirements

REQ 7.45 Under the conditions stated above, the differential cross-talk amplitude to a victim differential pair induced at the near end and the far end by five multi-aggressor differential pairs on an AdvancedMC Backplane Connector, including contact pads, thru-holes, and traces routing out from Connector region **should** be less than 3% at all layers used for high-speed signal routing.

REQ 7.46 The test data **shall** be reported with description of test fixture information listed in Table 7-39.

7.2.5.5 Propagation characteristics

Requirements

REQ 7.47 The propagation characteristics of the transmission line in the AdvancedMC Backplane Connector from the contact pad on Module to the contact termination point on Backplane **shall** be defined in each vender's product specification.

REQ 7.48 The propagation delay skew within each differential pair from the Module pads to the termination points on Backplane **shall** be 5 ps maximum.

REQ 7.49 The propagation delay skew between differential pairs in a Connector from the Module pads to the termination points on Backplane **shall** be 5 ps maximum.

Property of CERN - For Internal Use Only – External Distribution Prohibited

7.2.6 AdvancedMC Backplane Connector mechanical characteristics

7.2.6.1 Mechanical operation

Conditions: IEC 60512-5 Test 9a
Standard atmospheric conditions
Speed of operations: 10 mm per sec. maximum, rest 5 sec. (unmated)

Requirements

REQ 7.50 The AdvancedMC Backplane Connector **shall** withstand 200 mating cycles without damage that would impair normal operation.

REQ 7.51 During the test sequences, only one test Module PCB for measurement **shall** be used for maximum 50 mating cycles.

REQ 7.52 The remainder of the test cycles **may** be performed using simplified 'mating cards' which comply to the AdvancedMC mating interface on AMC.0 spec, but not necessarily wired for measurement or populated with other components.

7.2.6.2 Engaging and separating forces

Conditions: IEC 60512-13-1
Standard atmospheric conditions
Rate of engagement and separation: 10 mm per sec. maximum

Table 7-8 Engaging and separating forces

Mating sides	Force
Maximum engaging force	100 N
Maximum separating force	65 N
Maximum bottoming force	200 N

Requirements

REQ 7.53 Under the conditions stated above, the force needed to engage an AdvancedMC Module PCB in the AdvancedMC Backplane Connector **shall not** exceed the values given in Table 7-8.

REQ 7.54 Under the conditions stated above, the force needed to disengage an AdvancedMC Module PCB from a AdvancedMC Backplane Connector **shall not** exceed the values given in Table 7-8.

REQ 7.55 Under the conditions stated above, the AdvancedMC Backplane Connector **shall** withstand to 200 N at 1 minute duration of Module insertion-bottoming force, without damage that would impair normal operation.

Property of CERN - For Internal Use Only – External Distribution Prohibited

7.2.6.3 Vibration (sinusoidal)

Conditions: IEC 60512-6-4
Standard atmospheric conditions
Mated Module PCB
The specimen shall be installed in a suitable fixture according to Figure 7-49

Table 7-9 Vibration

Severity
10 Hz to 500 Hz with an amplitude of 0.35 mm or an acceleration of 50 m/s^2 eight sweepings in each direction, duration 3x8 h/axis, in three axes (32 sweepings in each direction)

Requirement

REQ 7.56 Under the conditions stated above, and with the vibration severity applied as specified in Table 7-9, there **shall** be no contact disturbance longer than 1 µs.

7.2.6.4 Shock

Conditions: IEC 60512-6-3
Standard atmospheric conditions
Mated plug-in card
The specimen shall be installed in a suitable fixture according to Figure 7-49

Table 7-10 Shock

Severity
Shock acceleration 300 m/s^2, duration of impact 11 ms Three shocks in two directions/axis, in three axes (18 shocks in total)

Requirement

REQ 7.57 Under the conditions stated above, and with the shock severity applied as specified in Table 7-10, there **shall** be no contact disturbance longer than 1 µs.

7.3 MicroTCA Carrier Hub Connectors

7.3.1 MicroTCA Carrier Hub Connector pin list

¶ 15 The MCH has a maximum of four tongues. The pin functions on each tongue are listed in Table 7-11, Table 7-12 and Table 7-13

Property of CERN - For Internal Use Only – External Distribution Prohibited

Table 7-11 .Functional contact pin list of mating interface: MCH 1

Power	2, 9, 18, 27, 42, 57, 72, 84
Ground	1, 7, 10, 13, 16, 19, 22, 25, 28, 31, 34, 37, 40, 43, 46, 49, 52, 55, 58, 61, 64, 67, 70, 73, 76, 79, 82, 85, 86, 89, 92, 95, 98, 101, 104, 107, 110, 113, 116, 119, 122, 125, 128, 131, 134, 137, 140, 143, 146, 149, 152, 155, 158, 161, 164
General purpose	3, 4, 5, 6, 8, 17, 26, 41, 56, 71, 83, 87, 88, 90, 91, 93, 94, 96, 97, 99, 100, 102, 103, 105, 106, 108, 109, 111, 112, 114, 115, 117, 118, 120, 121, 123, 124, 126, 127, 129, 130, 132, 133, 165, 166, 167, 168, 169, 170
Differential pairs	11/12, 14/15, 20/21, 23/24, 29/30, 32/33, 35/36, 38/39, 44/45, 47/48, 50/51, 53/54, 59/60, 62/63, 65/66, 68/69, 74/75, 77/78, 80/81, 135/136, 138/139, 141/142, 144/145, 147/148, 150/151, 153/154, 156/157, 159/160, 162/163

Table 7-12 Functional contact pin list of mating interface: MCH 2

Ground	1, 4, 7, 10, 13, 16, 19, 22, 25, 28, 31, 34, 37, 40, 43, 46, 49, 52, 55, 58, 61, 64, 67, 70, 73, 76, 79, 82, 85, 86, 89, 92, 95, 98, 101, 104, 107, 110, 113, 116, 119, 122, 125, 128, 131, 134, 137, 140, 143, 146, 149, 152, 155, 158, 161, 164, 167, 170
General purpose	2, 3, 5, 6, 165, 166, 168, 169
Differential pairs	8/9, 11/12, 14/15, 17/18, 20/21, 23/24, 26/27, 29/30, 32/33, 35/36, 38/39, 41/42, 44/45, 47/48, 50/51, 53/54, 56/57, 59/60, 62/63, 65/66, 68/69, 71/72, 74/75, 77/78, 80/81, 83/84, 87/88, 90/91, 93/94, 96/97, 99/100, 102/103, 105/106, 108/109, 111/112, 114/115, 117/118, 120/121, 123/124, 126/127, 129/130, 132/133, 135/136, 138/139, 141/142, 144/145, 147/148, 150/151, 153/154, 156/157, 159/160, 162/163

Table 7-13 Functional contact pin list of mating interface: MCH 3 and MCH 4

Ground	1, 7, 10, 13, 16, 19, 22, 25, 28, 31, 34, 37, 40, 43, 46, 49, 52, 55, 58, 61, 64, 67, 70, 73, 76, 79, 82, 85, 86, 89, 92, 95, 98, 101, 104, 107, 110, 113, 116, 119, 122, 125, 128, 131, 134, 137, 140, 143, 146, 149, 152, 155, 158, 161, 164, 170
General purpose	2, 3, 4, 5, 6, 165, 166, 167, 168, 169
Differential pairs	8/9, 11/12, 14/15, 17/18, 20/21, 23/24, 26/27, 29/30, 32/33, 35/36, 38/39, 41/42, 44/45, 47/48, 50/51, 53/54, 56/57, 59/60, 62/63, 65/66, 68/69, 71/72, 74/75, 77/78, 80/81, 83/84, 87/88, 90/91, 93/94, 96/97, 99/100, 102/103, 105/106, 108/109, 111/112, 114/115, 117/118, 120/121, 123/124, 126/127, 129/130, 132/133, 135/136, 138/139, 141/142, 144/145, 147/148, 150/151, 153/154, 156/157, 159/160, 162/163

Requirements

REQ 7.58 Mating interface of MCH 1, 2, 3, and 4 **shall** follow the functional contact pin list as given in Table 7-11, Table 7-12 and Table 7-13.

REQ 7.59 All or part of Ground pins in the MCH 1, 2, 3, and 4 Connectors **may** be connected together within each Connector.

7.3.2 MicroTCA Carrier Hub mating interface design

¶ 16 The mating interface design for the multiple-tongue MCH needs to address the tolerance accumulations between the multi-tongue and aggregated Backplane Connectors, which may cause damage to the MCH or the Backplane Connector or cause short-circuit and contact-off problems.

Property of CERN - For Internal Use Only – External Distribution Prohibited

¶ 17 The MCH may be able to use a plug Connector to reduce insertion force and to solve the tolerance stack-up problem between the multiple tongues and the Backplane Connectors.

¶ 18 The MCH mating interface design can be classified generally, and is not limited, to three different types as shown in Figure 7-13, Figure 7-14, and Figure 7-15. These each have different electrical characteristics and requirements.

Figure 7-13 Card edge interface on each tongue (example)

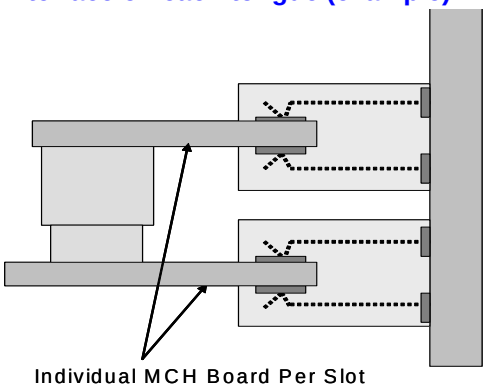

Figure 7-14 Plug Connector interface with individual MCH Board on each tongue (example)

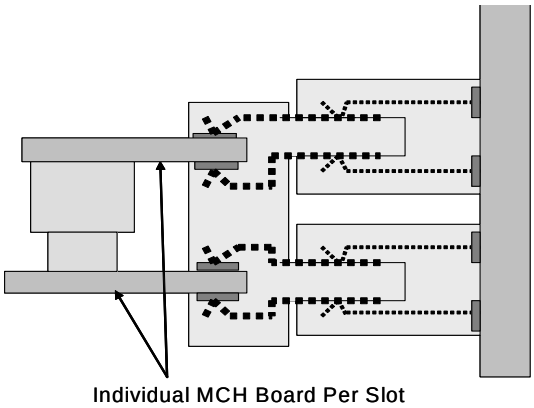

Figure 7-15 Plug Connector integrated connection between Board and next tongue (example)

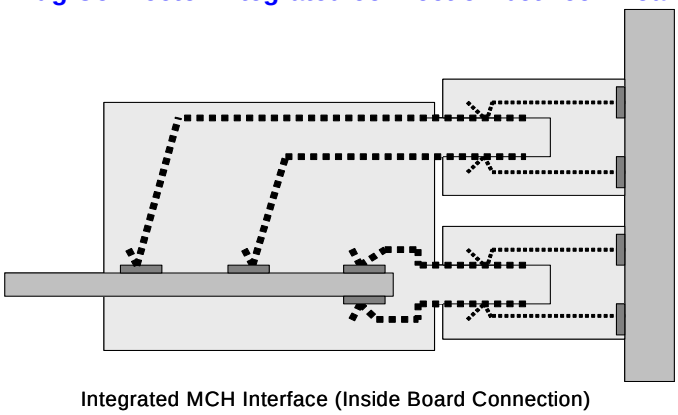

Property of CERN - For Internal Use Only – External Distribution Prohibited

7.3.2.1 MCH Plug Connector dimensions

¶ 19 The MCH plug Connector outline envelope dimensions are specified in Section 2, “Mechanical”, and any design can use these for multiple tongues, as long as they are within the envelope specified in Section 2.

7.3.2.2 MCH plug Connector sequencing

¶ 20 The MCH has four steps of sequential contacts during insertion/extraction to the Backplane Connectors, and the required mating step dimension on the plug Connector contacts are given in Section 2, “Mechanical”.

¶ 21 The mating step order on each pin is specified in Section 6, “Interconnect”.

7.3.3 MicroTCA Carrier Hub Backplane Connector

¶ 22 The Backplane Connectors for the multiple-tongued MCHs can use individual AdvancedMC Backplane Connector against each tongue with multiple layouts.

Requirement

REQ 7.60 MCH Backplane Connector **shall** support the tongue on AdvancedMC, the special tongue which has straight side edges on AdvancedMC interface as shown in Figure 7-1 and the MCH plug which has reduced mating forces features described in Section 2, “Mechanical”.

7.3.3.1 Aggregated AdvancedMC Connector layout

Requirement

REQ 7.61 Tolerance for the multiple Connector Slot locations after being assembled to the Backplane **shall** comply with Figure 7-16.

Property of CERN - For Internal Use Only – External Distribution Prohibited

Figure 7-16 Slot tolerance on aggregated AdvancedMC Connectors

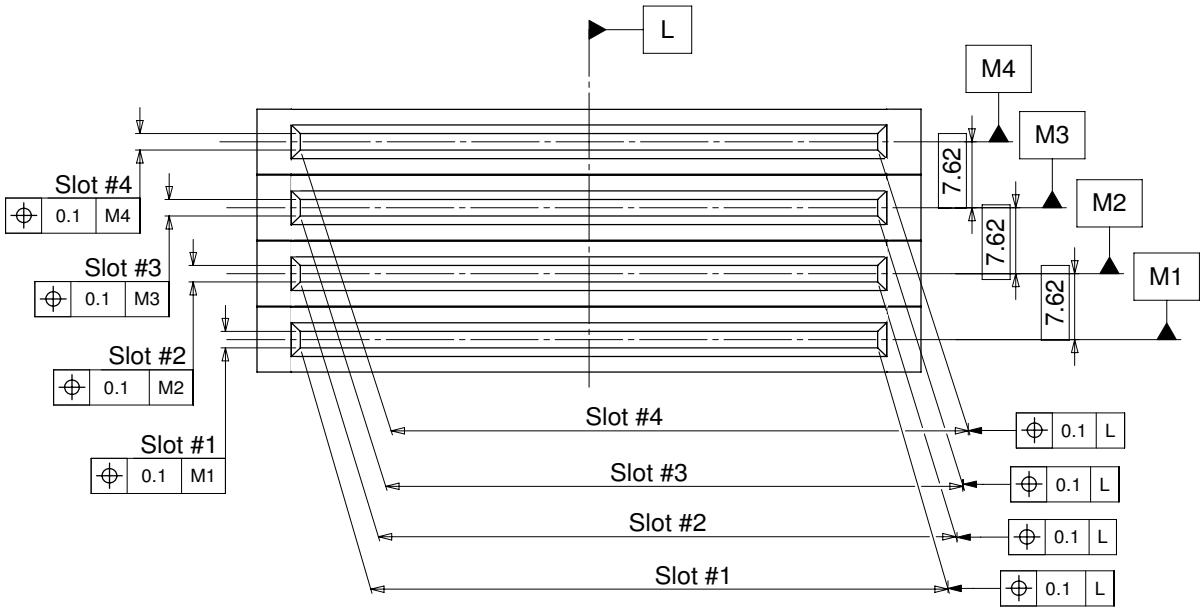

7.3.4 MicroTCA Carrier Hub Connector Backplane PCB layout

7.3.4.1 Compression-mount Connector PCB layout for MCH

Requirement

REQ 7.62 Backplane PCB layout of the compression-mount Connectors for MCH 1, 2, 3, and 4 **shall** be same as the AdvancedMC Backplane Connector specified in Figure 7-6. These are laid out next to each other on a 7.62 mm pitch.

7.3.4.2 Solder surface-mount Connector PCB layout for MCH

Requirement

REQ 7.63 Backplane PCB layout of the solder surface-mount Connectors for MCH 1, 2, 3, and 4 **shall** be the same as the AdvancedMC Backplane Connector specified in Figure 7-7, laid out next to each other on a 7.62 mm pitch.

7.3.4.3 Press-fit Connector PCB layout for MCH

Requirement

REQ 7.64 Backplane PCB layout of the press-fit Connector for MCH 1, 2, 3, and 4 **shall** be same as the AdvancedMC Backplane Connector specified in Figure 7-8, laid out next to each other on a 7.62 mm pitch.

Property of CERN - For Internal Use Only – External Distribution Prohibited

7.3.5 MicroTCA Carrier Hub Connector electrical characteristics

¶ 23 The electrical characteristics for the MCH Connector specified in this section are applied at the mated condition.

7.3.5.1 Line resistance

Conditions: IEC 60512-2-1
Standard atmospheric conditions
Mated condition
Connecting points as specified Section 7.7.1.1, "Specimen Set 1: Contact resistance measurement."

Table 7-14 Maximum line resistances

	Maximum initial line resistance	Maximum change in relation to initial value
Differential pair conductors	60 milli Ohms	10 milli Ohms
Ground conductors	60 milli Ohms	10 milli Ohms
General purpose conductors	60 milli Ohms	10 milli Ohms
Power conductors	60 milli Ohms	10 milli Ohms

Requirements

REQ 7.65 The line resistance on the card edge style MCH interface shown in Figure 7-13 **shall** be same as the AdvancedMC Backplane Connector specified in Table 7-6.

REQ 7.66 The line resistance from the Module Board termination point to the Backplane termination point on the plug-style MCH shown in Figure 7-14 **shall not** exceed the value in Table 7-14.

REQ 7.67 The line resistance from the Module Board termination point to the Backplane termination point on the plug-style MCH shown in Figure 7-15 and any other unique designs **shall** be defined in the vendor's specification.

REQ 7.68 Some groups of power conductors **may** be used in parallel for higher current capacity.

REQ 7.69 In order to avoid excessive current in the lower resistance lines, the difference in line resistance between the parallel power conductors in a connector **shall not** exceed ±20% of the average line resistance of the group during all test sequences.

7.3.5.2 Inductance

Requirements

REQ 7.70 The line inductance on the card edge-style MCH interface shown in Figure 7-13 **shall** be the same as the AdvancedMC Backplane Connector specified in Section 7.2.4.6.

REQ 7.71 The line inductance on the plug-style MCH shown in Figure 7-14 from the Module Board termination point to the Backplane termination point **shall** be 50 nH maximum.

Property of CERN - For Internal Use Only – External Distribution Prohibited

REQ 7.72 The line resistance on the plug-style MCH shown in Figure 7-15 from the Module Board termination point to the Backplane termination point **shall** be defined in the vendor's specification.

REQ 7.73 Dynamic behavior for other conductors is controlled under Section 7.3.6, "MicroTCA Carrier Hub Connector high-speed characteristics".

7.3.5.3 Creepage clearance

Requirement

REQ 7.74 Creepage clearance requirements for the MCH Connectors **shall** be the same as the AdvancedMC Backplane Connector specified in Section 7.2.4.1.

7.3.5.4 Insulation voltage-proof

Requirement

REQ 7.75 Insulation voltage-proof requirements for the MCH Connectors **shall** be the same as the AdvancedMC Backplane Connector specified in Section 7.2.4.2.

7.3.5.5 Current-carrying capacity

Requirement

REQ 7.76 Current-carrying capacity requirements for the MCH Connectors **shall** be the same as the AdvancedMC Backplane Connector specified in Section 7.2.4.3.

7.3.5.6 Insulation resistance

Requirement

REQ 7.77 Insulation resistance requirements for the MCH Connectors **shall** be the same as AdvancedMC Backplane Connector specified in Section 7.2.4.5.

7.3.5.7 Engagement under electrical load

Requirement

REQ 7.78 The powered engagement requirement for the MCH Connectors **shall** be the same as the AdvancedMC Backplane Connector shown in Section 7.2.4.7.

7.3.6 MicroTCA Carrier Hub Connector high-speed characteristics

Note: High speed signal characteristic requirements on the AdvancedMC Backplane Connector may have future refinements which will be based on the analysis of the allowable connector loss budget for 12.5 Gbps single lane signal transmission on the entire channel.

Property of CERN - For Internal Use Only – External Distribution Prohibited

7.3.6.1 Differential impedance

Conditions: IEC 60512-23-4
Test method B
Measurement area = Figure 7-45, Figure 7-46 and Figure 7-47
Specimen environment impedance = 100 Ohms differential
Input step rise time (20% – 80%) 25 ps maximum to the measurement point defined in Figure 7-45, Figure 7-46, and Figure 7-47
Adjacent lines terminated at both ends

Requirements

REQ 7.79 Under the conditions stated above**,** the differential impedance peak values in the transmission line from the MCH Board to the Backplane through the plug and receptacle Connector including contact pads, thru-holes, and traces routing out from Connector region **should** stay within a tolerance band of 100 Ohms ±10 Ohms as shown in Figure 7-17, at all layers used for high-speed signal routing.

REQ 7.80 The test data **shall** be reported with description of test fixture information listed in Table 7-39.

Figure 7-17 Typical impedance profile, including connections (example for guidance only)

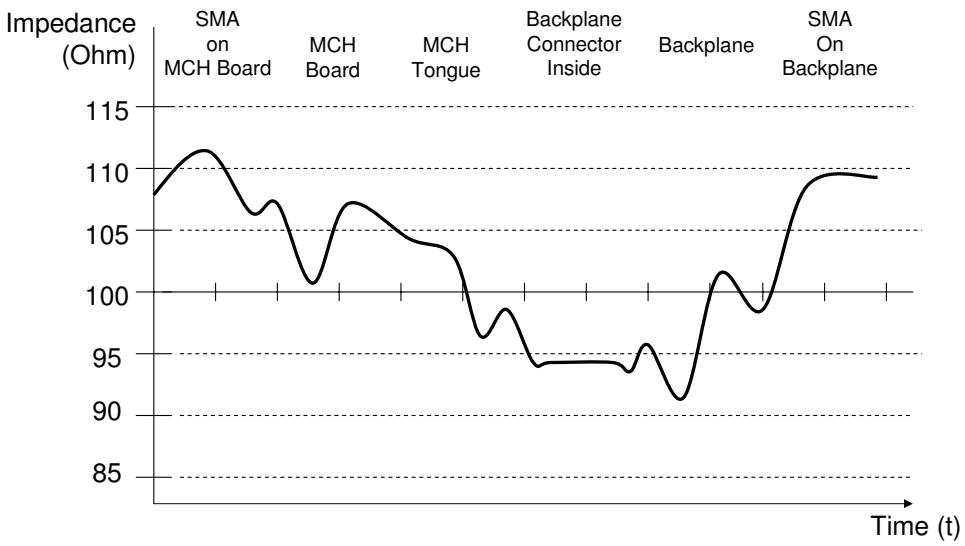

7.3.6.2 Differential return loss

Conditions: IEC 60512-25-5
Method A time domain
Measurement area = Figure 7-45, Figure 7-46 and Figure 7-47
Specimen environment impedance = 100 Ohms differential
Adjacent lines terminated at both ends

Property of CERN - For Internal Use Only – External Distribution Prohibited

Requirements

REQ 7.81 The differential return loss profile on the card edge-style MCH interface to the Backplane as shown in Figure 7-13 **should** be same as the AdvancedMC Backplane Connector specified in Section 7.2.5.2.

REQ 7.82 Under the conditions stated above, the differential return loss profile on the plug-style MCH interface design to the Backplane as shown in Figure 7-14 and the transmission line from the MCH Board to the Backplane through the plug and receptacle Connector including contact pads, thru-holes, and traces routing out from Connector region **should** be less than –17 dB at 5 GHz, less than –10 dB at 8 GHz, and less than –5 dB at 14.5 GHz as shown in Figure 7-18, at all layers used for high-speed signal routing.

REQ 7.83 The differential return loss profile on the MCH interface design as shown in Figure 7-15 and other unique designs, given the transmission line characteristics of the MCH Board to the Backplane through the plug and receptacle Connector, including contact pads, thru-holes, and traces routing out from Connector region, **shall** be defined in the vendor's specification.

REQ 7.84 The test data **shall** be reported with description of test fixture information listed in Table 7-39.

Figure 7-18 Typical return loss profile, MCH plug individual Board style (example for guidance only)

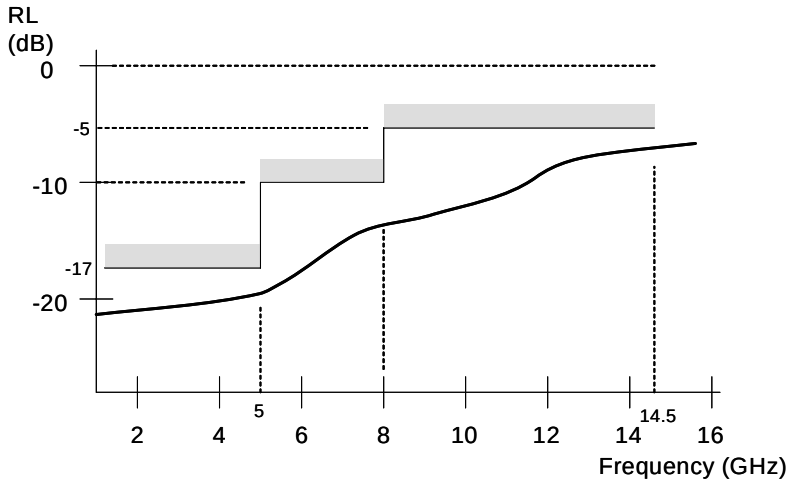

7.3.6.3 Differential attenuation

Conditions: IEC 60512-25-2
Measurement area = Figure 7-45, Figure 7-46 and Figure 7-47
Specimen environment impedance = 100 Ohms differential
Adjacent lines terminated at both ends

Requirements

REQ 7.85 The differential attenuation profile on the card edge-style MCH interface to the Backplane as shown in Figure 7-13 **should** be same as the AdvancedMC Backplane Connector specified in Section 7.2.5.3.

Property of CERN - For Internal Use Only – External Distribution Prohibited

REQ 7.86 Under the conditions stated above, the differential attenuation profile on the plug-style MCH interface design to Backplane as shown in Figure 7-14 and the differential attenuation profile in the transmission line from the MCH Board to the Backplane through the plug and receptacle Connector including contact pads, thru-holes, and traces routing out from Connector region **should** be greater than -1.3 dB at 6.5 GHz, greater than –3 dB at 12 GHz and greater than –6 dB at 14.5 GHz as shown in Figure 7-19, at all layers used for high-speed signal routing.

REQ 7.87 The differential attenuation profile on the MCH interface design as shown in Figure 7-15 and other unique designs, given the transmission line characteristics from the MCH Board to the Backplane through the plug and receptacle Connector, including contact pads, thru-holes, and traces routing out from Connector region, **shall** be defined in the vendor's specification.

REQ 7.88 The test data **shall** be reported with description of test fixture information listed in Table 7-39.

Figure 7-19 Typical attenuation profile, MCH plug individual Board style (example for guidance only)

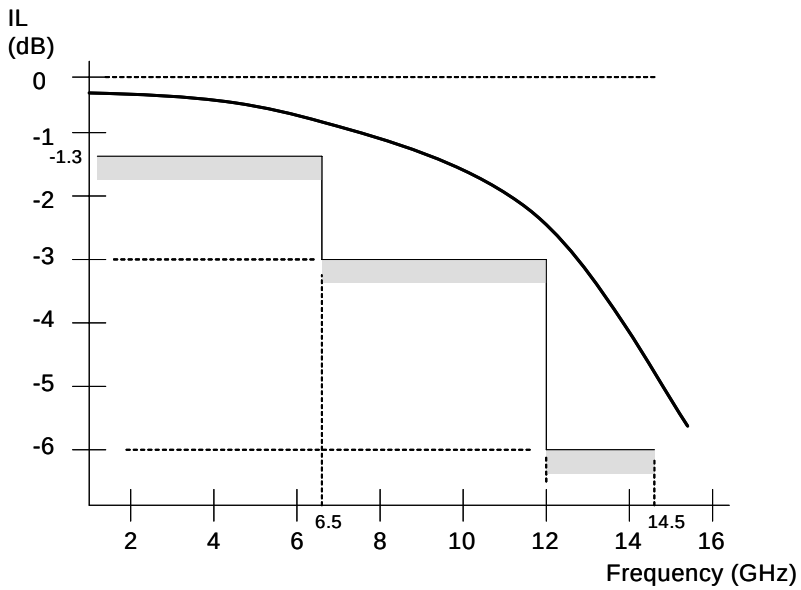

7.3.6.4 Differential pair cross-talk

Conditions: IEC 60512-25-1
Method A time domain
Measurement area = Figure 7-45, Figure 7-46 and Figure 7-47
Specimen environment impedance = 100 Ohms differential
Input step rise time (20% – 80%) 25 ps maximum to the measurement point defined in Figure 7-45, Figure 7-46 and Figure 7-47
Multi aggressor condition = Figure 7-48

Requirements

REQ 7.89 Under the conditions stated above, the differential cross-talk amplitude to a victim differential pair induced at the near end and the far end by eight multi-aggressor

Property of CERN - For Internal Use Only – External Distribution Prohibited

differential pairs on the card edge style MCH interface as shown in Figure 7-13 **should** be less than 4% at all layers used for high-speed signal routing.

REQ 7.90 Under the conditions stated above, the differential cross-talk amplitude to a victim differential pair induced at the near end and the far end by eight multi-aggressor differential pairs on the plug-style MCH interface as shown in Figure 7-14 **should** be less than 5% at all layers used for high-speed signal routing.

REQ 7.91 Under the conditions stated above, the differential cross-talk amplitude to a victim differential pair induced at the near end and the far end by eight multi-aggressor differential pairs on the plug-style MCH interface as shown in Figure 7-15 and other unique designs **shall** be defined in the vendor's specification.

REQ 7.92 The test data **shall** be reported with description of test fixture information listed in Table 7-39.

7.3.6.5 Propagation characteristics

Requirements

REQ 7.93 The propagation characteristics of the transmission line in the MCH plug Connector from the contact termination point on MCH Board to the contact point to the Backplane Connector **shall** be defined in each vender's product specification.

REQ 7.94 The propagation delay skew within each differential pair from the pads on MCH Board to the termination points on the Backplane **shall** be 5 ps maximum.

REQ 7.95 The propagation delay skew between differential pairs within each contacts row in a Connector from the pads on MCH Board to the termination points on the Backplane **shall** be 5 ps maximum.

REQ 7.96 The propagation delay skew between each contacts row on each MCH plug Connector **shall** be defined in the vendor's product specification.

7.3.7 MicroTCA Carrier Hub Connector mechanical characteristics

7.3.7.1 Mechanical operation

Conditions: IEC 60512-5 Test 9a
Standard atmospheric conditions
Speed of operations: 10 mm per sec. maximum, rest 5 sec. (unmated)

Requirement

REQ 7.97 The MCH Connector shall withstand 200 mating cycles without damage that would impair normal operation.

7.3.7.2 Engaging and separating forces

Conditions: IEC 60512-13-1
Standard atmospheric conditions
Rate of engagement and separation: 10 mm per sec. maximum

Property of CERN - For Internal Use Only – External Distribution Prohibited

Table 7-15 Engaging and separating forces

Mating sides	Force
Maximum engaging force	145 N
Maximum separating force	110 N
Maximum bottoming force	200 N

Requirements

REQ 7.98 Under the conditions stated above, the force needed to engage a four-tongue MCH Module in the Backplane Connectors **shall not** exceed the values given in Table 7-15.

REQ 7.99 Under the conditions stated above, the force needed to disengage a four-tongue MCH from Backplane Connectors **shall not** exceed the values given in Table 7-15.

REQ 7.100 Under the conditions stated above, the MCH plug Connector and the Backplane Connectors for the MCH **shall** withstand to 200 N at a 1-minute duration of Module insertion-bottoming force, without damage that would impair normal operation.

7.3.7.3 Vibration (sinusoidal)

Conditions: IEC 60512-6-4
Standard atmospheric conditions
Mated Condition
The specimen shall be installed in a suitable fixture according to Figure 7-49

Table 7-16 Vibration

Severity
10 Hz to 500 Hz with an amplitude of 0.35 mm or an acceleration of 50 m/s^2 eight sweepings in each direction, duration 3x8 h/axis, in three axes (32 sweepings in each direction)

Requirement

REQ 7.101 Under the conditions stated above, and with the vibration severity applied as specified in Table 7-16, there **shall** be no contact disturbance longer than 1 µs.

7.3.7.4 Shock

Conditions: IEC 60512-6-3
Standard atmospheric conditions
Mated Condition
The specimen shall be installed in a suitable fixture according to Figure 7-49

Property of CERN - For Internal Use Only – External Distribution Prohibited

Table 7-17 Shock

Severity
Shock acceleration 300 m/s^2, duration of impact 11 ms Three shocks in two directions/axis, in three axes (18 shocks in total)

Requirement

REQ 7.102 Under the conditions stated above, and with the shock severity applied as specified in Table 7-17, there **shall** be no contact disturbance longer than 1 µs.

7.3.7.5 Retention of MCH plug Connector

Requirement

REQ 7.103 The MCH plug Connector must be able to withstand to 200 N at 1 minute duration of Module insertion-bottoming force to the Backplane Connector, which is specified in Section 7.3.7.2.

7.4 Power Module Output Connector

¶ 24 The Power Module Output Connector is a plug and a receptacle-style Connector mounted between the Backplane and the Power Module to feed power to Modules and fans within the MicroTCA assembly.

7.4.1 Power Module Output Connector pin list and mating sequence

Table 7-18 Functional contact pin list and mating sequence

GND	**First Mate**	P4, P5, P6, P7, P8, P9, P10, P11
Power Branch	**Second Mate**	P1, P2, P3, P12, P13, P14, P15, P16, P17, P18, P19, P20, P21, P22, P23, P24
Signal and SignalGND	**Third Mate**	A2, A3, A4, A5, A6, A7, A8, A9, B1, B2, B3, B4, B5, B6, B7, B8, B9, C1, C2, C3, C4, C5, C6, C7, C8, C9, D1, D2, D3, D4, D5, D6, D7, D8, D9, E1, E2, E3, E4, E5, E6, E7, E8, E9, F1, F2, F3, F4, F5, F6, F7, F8, F9, G1, G2, G3, G4, G5, G6, G7, G8, G9, H1, H2, H3, H4, H5, H6, H7, H8, H9
	Last Mate	A1

Requirement

REQ 7.104 Power Module Output Connectors **shall** follow the functional contact pin list as given in Table 7-18.

Property of CERN - For Internal Use Only – External Distribution Prohibited

7.4.2 Power Module Output Connector dimensions

¶ 25 Original dimensions are in millimeters, and all dimensions on the drawings and tables are in millimeters. The decimal point is used instead of the decimal comma.

¶ 26 All drawings are shown in third angle projection.

7.4.2.1 Connector mounted on Backplane

Figure 7-20 Overall dimensions of Power Module Output Connector mounted on Backplane

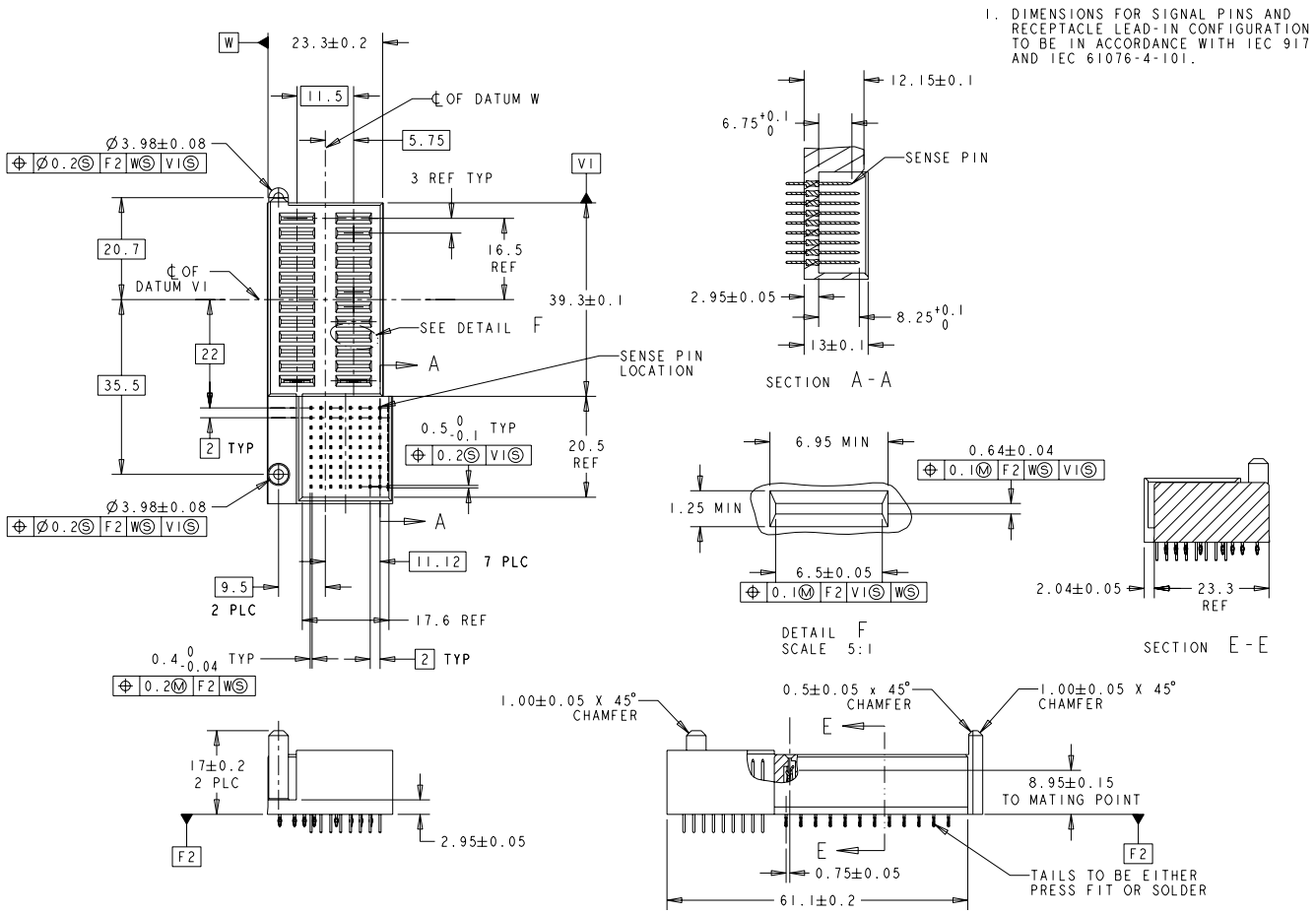

Requirements

REQ 7.105 In order to ensure the intended Connector functionality and compatibility, the Power Module Output Connector mounted on the Backplane **shall** have dimensions shown in Figure 7-20.

REQ 7.106 The shape of the parts **may** deviate from the drawing in Figure 7-20, as long as the specified dimensions are not affected and the intended functionality is provided.

Property of CERN - For Internal Use Only – External Distribution Prohibited

7.4.2.2 Connector mounted on Power Module

Figure 7-21 Overall dimensions of Power Module Output Connector mounted on Module

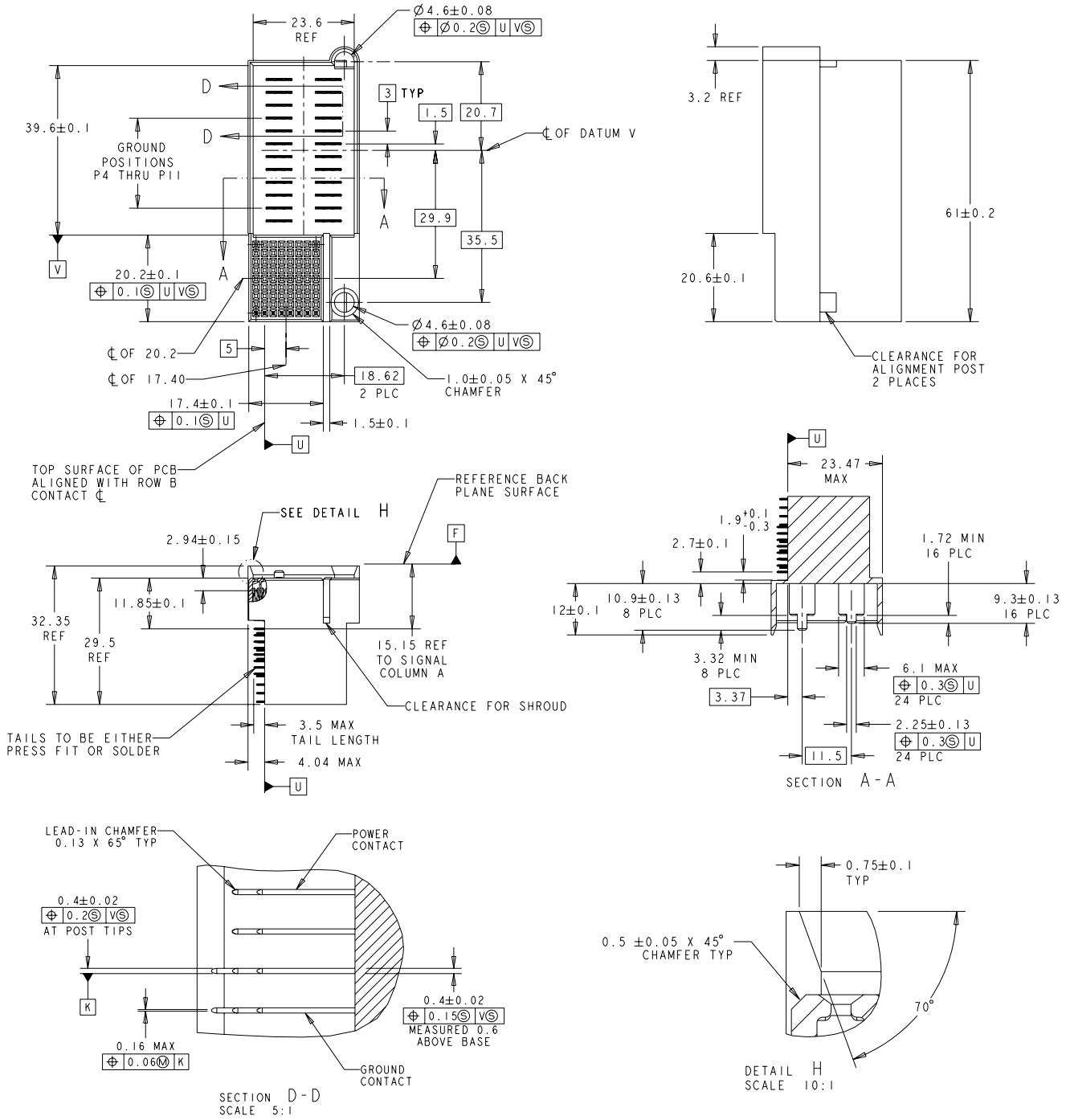

Property of CERN - For Internal Use Only – External Distribution Prohibited

Requirements

REQ 7.107 In order to ensure the intended Connector functionality and compatibility, the Power Module Output Connector mounted on Module **shall** have dimensions shown in Figure 7-21.

REQ 7.108 The shape of the parts **may** deviate from the drawing in Figure 7-21, as long as the specified dimensions are not affected and the intended functionality is provided.

7.4.3 Power Module Output Connector Backplane PCB layout

¶ 27 This specification specifies only a PCB layout on the Backplane. PCB layout on the Power Module Output Connector is defined by each Connector vendor's specification.

¶ 28 Original dimensions are in millimeters, and all dimensions on the drawings and tables are in millimeters.

¶ 29 All drawings are shown in the top view of the Connector-mount side.

Figure 7-22 Overall dimensions of Backplane PCB layout and pinout for Power Module Output Connector

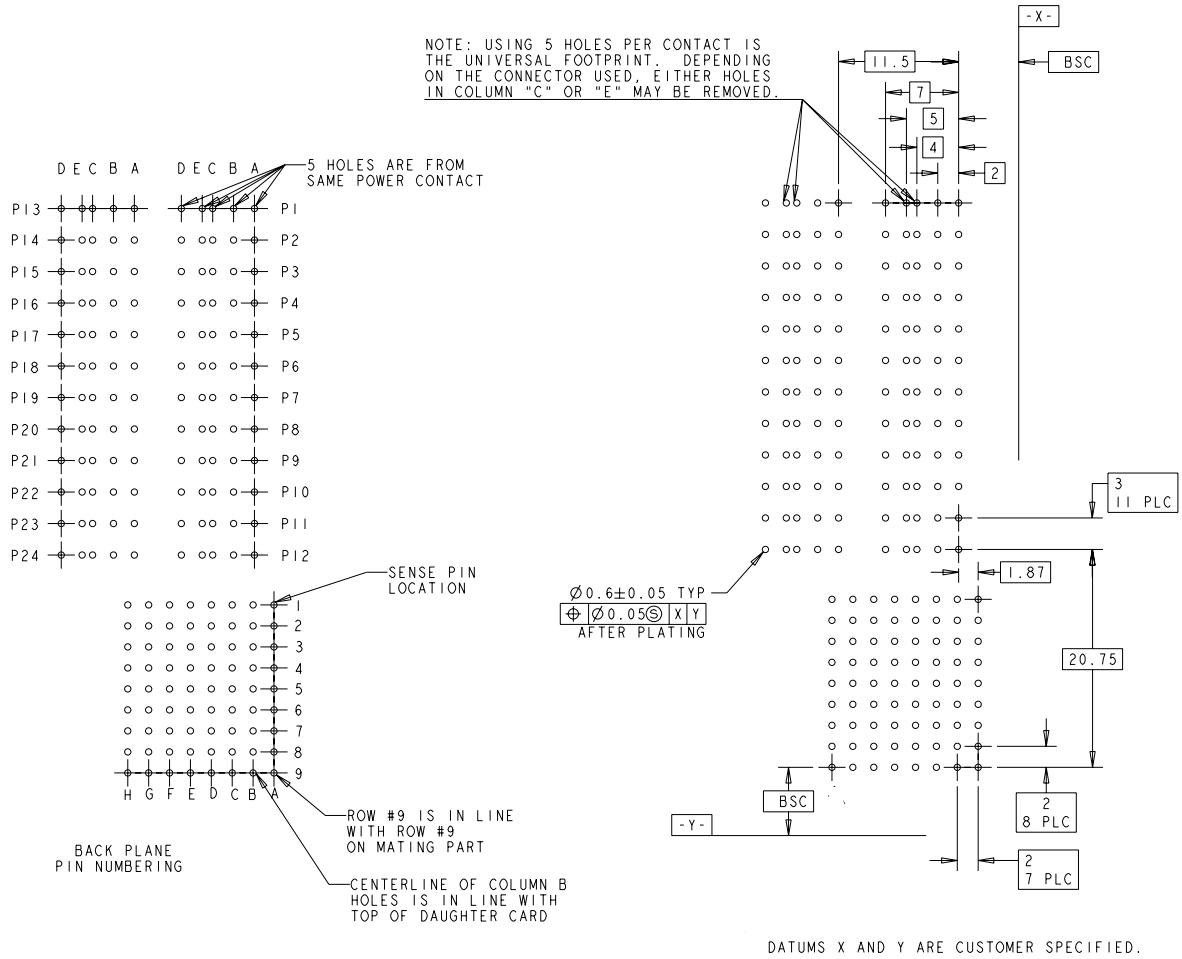

Property of CERN - For Internal Use Only – External Distribution Prohibited

Figure 7-23 Plated through-hole cross section

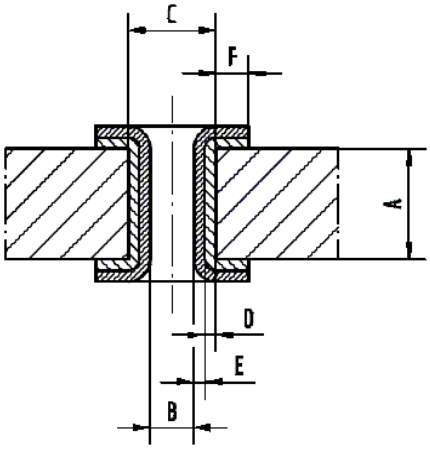

Table 7-19 Plated through-hole dimensions

		Dimension	Dimension (Gold Plating)
A	PCB Thickness	Minimum 1.4 mm	Minimum 1.4 mm
B	Plated Through Hole Diameter	Refer to Figure 7-22	Refer to Figure 7-22
C	Drill Hole Diameter	0.70 +/- 0.02 mm	0.73 +/- 0.02 mm
D	Cu Thickness	Minimum 25 µm	Minimum 25 µm
E	Plating Thickness (Other material and thickness of plating may be used based on both RoHS compliance and connector vendor's agreement)	(Minimum 0.5 µm Immersion Sn) (0.2 - 0.5µm OSP) (Minimum 0.1µm Immersion Ag)	(0.1 - 0.5 µm Immersion Au, Over 4.0 - 5.0 µm Ni)
	Pad Diameter (=C+F+F)	Minimum 0.9 mm	Minimum 0.9 mm

Requirements

REQ 7.109 In order to ensure the intended Connector functionality and compatibility, the Backplane PCB layout and finished plated through hole diameter for the Power Module Output Connector **shall** have dimensions shown in Figure 7-22.

REQ 7.110 The plated through hole **should** have dimensions shown in Figure 7-23 and Table 7-19.

Property of CERN - For Internal Use Only – External Distribution Prohibited

7.4.4 Electrical characteristics for Power Module Output Connector

7.4.4.1 Creepage clearance

Condition: IEC 60 664-1

Table 7-20 Creepage clearance distances

Between Power Contacts	Minimum 0.1 mm
Between Signal (Signal GND) Contacts	Minimum 0.1 mm
Between Signal (Signal GND) and Power Contacts	Minimum 0.1 mm

Requirements

REQ 7.111 Under the conditions stated in Table 7-20, all Creepage and clearance distances between all conductors inside the Connector **shall** be minimum of 0.1 mm.

REQ 7.112 Connectors **shall** provide a minimum of 100 V insulation between Logic Ground and Shelf Ground, in case of any conductive material on the connector connected to Shelf Ground.

7.4.4.2 Insulation voltage-proof

Conditions: IEC 60512-4-1
Standard atmospheric conditions
Mated and unmated condition
Wiring arrangement according to Section 7.7.1.2, “Specimen Set 2: Insulation resistance and voltage-proofing measurement.”

Table 7-21 Rated insulation voltages

	Insulation voltage	Pollution degree (IEC 60664-1)
Signal (Signal GND) to Signal (Signal GND)	80 V r.m.s.	1 (inside Connector)
Power to Power	80 V r.m.s.	1 (inside Connector)
Power to Signal (Signal GND)	80 V r.m.s.	1 (inside Connector)

Requirement

REQ 7.113 Under the conditions stated in Table 7-21, all insulation voltages between all conductors inside the Connector **shall** be minimum of 80 V r.m.s.

Property of CERN - For Internal Use Only – External Distribution Prohibited

7.4.4.3 Current carrying capacity

Conditions: IEC 60512-5-2
Standard atmospheric conditions
Wiring arrangement in Figure 7-40

Table 7-22 Current rating

	Current rating (With Derating of IEC 60512)	Connector Capability	Temperature Rise
Signal and Signal GND Conductor	0.5 A/pin	0.625 A/pin	30°C Maximum
Power branch and GND Conductor	9.3 A/pin	11.625 A/pin	30°C Maximum

Requirements

REQ 7.114 Connector **shall** be able to perform at 100 °C temperature condition, which includes a 30 °C temperature rise by current distribution from 70 °C maximum ambient temperature.

REQ 7.115 Under the conditions stated above and Table 7-22, current carrying capability of each signal and Signal Ground conductor inside the Connector **shall** be 0.625 A, which includes a 20% margin on rated current in accordance with IEC 60512-5-2.

REQ 7.116 Under the conditions stated above and Table 7-22, current carrying capability of each power feed and return conductor inside the Connector **shall** be 11.625 A, which includes a 20% margin on rated current in accordance with IEC 60512-5-2.

REQ 7.117 Connector design **shall** ensure that no contact exceeds its current rating due to current balancing caused by variations in contact resistance.

7.4.4.4 Line resistance

Conditions: IEC 60512-2-1
Standard atmospheric conditions
Mated Condition
Connecting points as specified Section 7.7.1.1, “Specimen Set 1: Contact resistance measurement.”

Property of CERN - For Internal Use Only – External Distribution Prohibited

Table 7-23 Maximum line resistances

	Maximum initial line resistance	Maximum change in relation to initial value
Signal (Signal GND) Conductor	25 milli Ohms	10 milli Ohms
Power branch and GND Conductor	5 milli Ohms	5 milli Ohms

Requirement

REQ 7.118 The line resistance of the various conductors **shall not** exceed the values given in Table 7-23.

7.4.4.5 Insulation resistance

Conditions: IEC 60512-3-1
Standard atmospheric conditions
Method B; see arrangement in Table 7-24.
Mated Condition
Test voltage 80 V r.m.s.

Table 7-24 Minimum insulation resistances

	Initial value	After moisture
Between Signal (Signal GND) conductors	100M Ohms	10M Ohms
Between Power Conductors	100M Ohms	10M Ohms
Between Power and Signal (Signal GND) Conductors	100M Ohms	10M Ohms

Requirements

REQ 7.119 Under the conditions stated in Table 7-24, the minimum initial insulation resistance between conductors as defined in Table 7-24 **shall** be 100M Ohms.

REQ 7.120 After applying the moisture tests specified in Section 7.7.2.3, "Group C - Thermal shock and moisture," the minimum insulation resistance **shall not** drop below 10M Ohms.

7.4.4.6 Inductance

Requirement

REQ 7.121 The line inductance on the conductors inside the Connector **shall** be 50 nH maximum.

Property of CERN - For Internal Use Only – External Distribution Prohibited

7.4.4.7 Engagement under electrical load

Requirement

REQ 7.122 All contacts **shall** tolerate 200 cycles of powered engagement into a load exhibiting an input characteristic of 5 V at 0.2 A maximum current without degradation of the Connector performance.

7.4.5 Power Module Output Connector mechanical characteristics

7.4.5.1 Mechanical operation

Conditions: IEC 60512-5 Test 9a
Standard atmospheric conditions
Speed of operations: 10 mm per sec. maximum, rest 5 sec. (unmated)

Requirement

REQ 7.123 The Power Module Output Connector **shall** withstand 200 mating cycles without damage that would impair normal operation.

7.4.5.2 Engaging and separating forces

Conditions: IEC 60512-13-1
Standard atmospheric conditions
Rate of engagement and separation: 10 mm per sec. maximum

Table 7-25 Engaging and separating forces

Mating sides	Force
Maximum engaging force	145 N
Maximum separating force	110 N
Maximum bottoming force	200 N

Requirements

REQ 7.124 Under the conditions stated above, the force needed to engage Connectors **shall not** exceed the values given in Table 7-25.

REQ 7.125 Under the conditions stated above, the force needed to disengage Connectors **shall not** exceed the values given in Table 7-25.

REQ 7.126 Under the conditions stated above, the Connector **shall** withstand to 200 N at a 1-minute duration of Connector insertion-bottoming force, without damage that would impair normal operation.

Property of CERN - For Internal Use Only – External Distribution Prohibited

7.4.5.3 Vibration (sinusoidal)

Conditions: IEC 60512-6-4
Standard atmospheric conditions
Mated Condition
The specimen shall be installed in a suitable fixture according to Figure 7-50

Table 7-26 Vibration

Severity
10 Hz to 500 Hz with an amplitude of 0.35 mm or an acceleration of 50 m/s^2 eight sweepings in each direction, duration 3x8 h/axis, in three axes (32 sweepings in each direction)

Requirement

REQ 7.127 Under the conditions stated above, and with the vibration severity applied as specified in Table 7-26, there **shall** be no contact disturbance longer than 1 µs.

7.4.5.4 Shock

Conditions: IEC 60512-6-3
Standard atmospheric conditions
Mated Condition
The specimen shall be installed in a suitable fixture according to Figure 7-50

Table 7-27 Shock

Severity
Shock acceleration 300 m/s^2, duration of impact 11 ms Three shocks in two directions/axis, in three axes (18 shocks in total)

Requirement

REQ 7.128 Under the conditions stated above, and with the shock severity applied as specified in Table 7-27, there **shall** be no contact disturbance longer than 1 µs.

7.4.5.5 Retention of Power Module Output Connector

7.4.5.5.1 Retention of Power Module Output Connector Module side

¶ 30 A Power Module Output Connector on the Module must be withstand to 200 N at a 1-minute duration of Module insertion-bottoming force to the Backplane Connector, which is specified in Section 7.4.5.2.

Property of CERN - For Internal Use Only – External Distribution Prohibited

7.5 Power Module Input Connector

¶ 31 The Power Module Input Connector is mounted on the front side of the Power Module and is connected to the external power cable.

¶ 32 There are two different types of Power Module Input Connectors: the 24 V type and the 48 V/60 V type.

¶ 33 The 24 V Connector uses a D-subminiature 9W4-type Connector, and the 48 V/60 V Connector uses a D-subminiature 7W2-type Connector.

Requirements

REQ 7.129 The 24 V type and the 48 V/60 V type Connectors are different Connectors and **shall** be mechanically prevented from mis-mating between wrong combination of plug and receptacle.

REQ 7.130 The Power Module Input Connector on Module side **shall** be mounted to the front panel, and the contacts are connected to the internal PCB.

REQ 7.131 The Power Module Input Connector **should** have EMI shielding and filtering options available.

REQ 7.132 The Power Module Input Connector **shall** have a retention mechanism between the mating plug and receptacle.

7.5.1 Power Module Input Connector pin list and mating sequence

Table 7-28 Functional contact pin list and sequence for 48 V/60 V Connector

Power Conductor	**First Mate**	P1, P2
Signal Conductor	**Last Mate**	1, 2

Requirement

REQ 7.133 48 V and 60 V Power Module Input Connectors **should** follow the functional contact pin list as given in Table 7-28.

Table 7-29 Functional contact pin list and sequence for 24 V Connector

Power Conductor	**First Mate**	P1, P2
Signal Conductor	**Last Mate**	1, 2

Requirement

REQ 7.134 24 V Power Module Input Connectors **should** follow the functional contact pin list as given in Table 7-29.

Property of CERN - For Internal Use Only – External Distribution Prohibited

7.5.2 Power Module Input Connector dimensions

¶ 34 Original dimensions are in millimeters, and all dimensions on the drawings and tables are in millimeters. The decimal point is used instead of the decimal comma.

¶ 35 All drawings are shown in third angle projection.

7.5.2.1 48 V/60 V Connector Module side

Figure 7-24 Mating interface dimensions of 48 V/60 V Power Module Input Connector mounted on Module

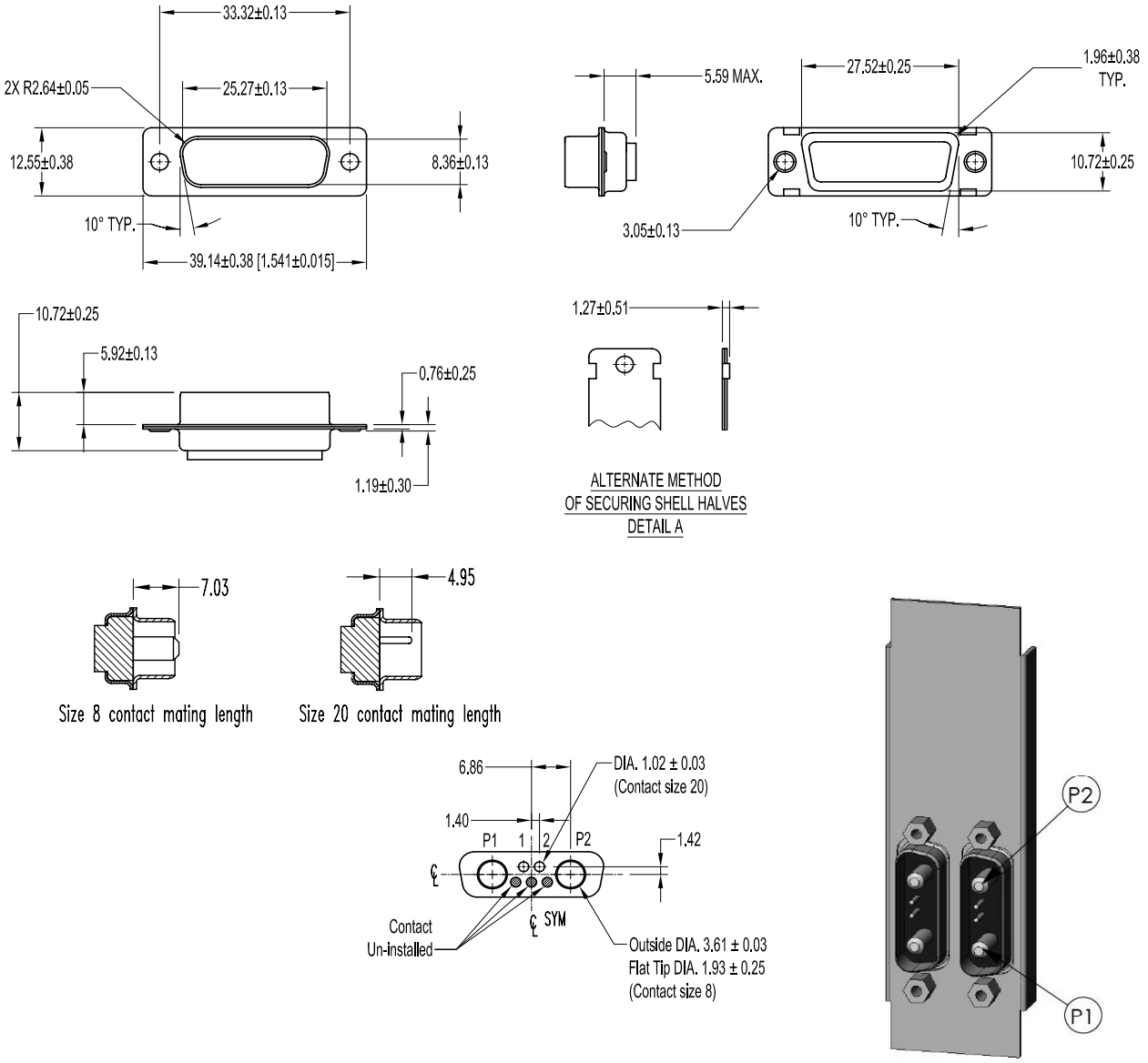

Property of CERN - For Internal Use Only – External Distribution Prohibited

Requirements

REQ 7.135 In order to ensure the intended Connector functionality and compatibility, the 48 V and the 60 V Power Module Input Connector mounted on Module **should** have dimensions specified in Figure 7-24.

REQ 7.136 The shape of the parts **may** deviate from the drawing in Figure 7-24, as long as the specified dimensions are not affected and the intended functionality is provided.

7.5.2.2 48 V/60 V Connector cable side

Figure 7-25 Mating interface dimensions of 48 V/60 V Power Module Input Connector on cable side

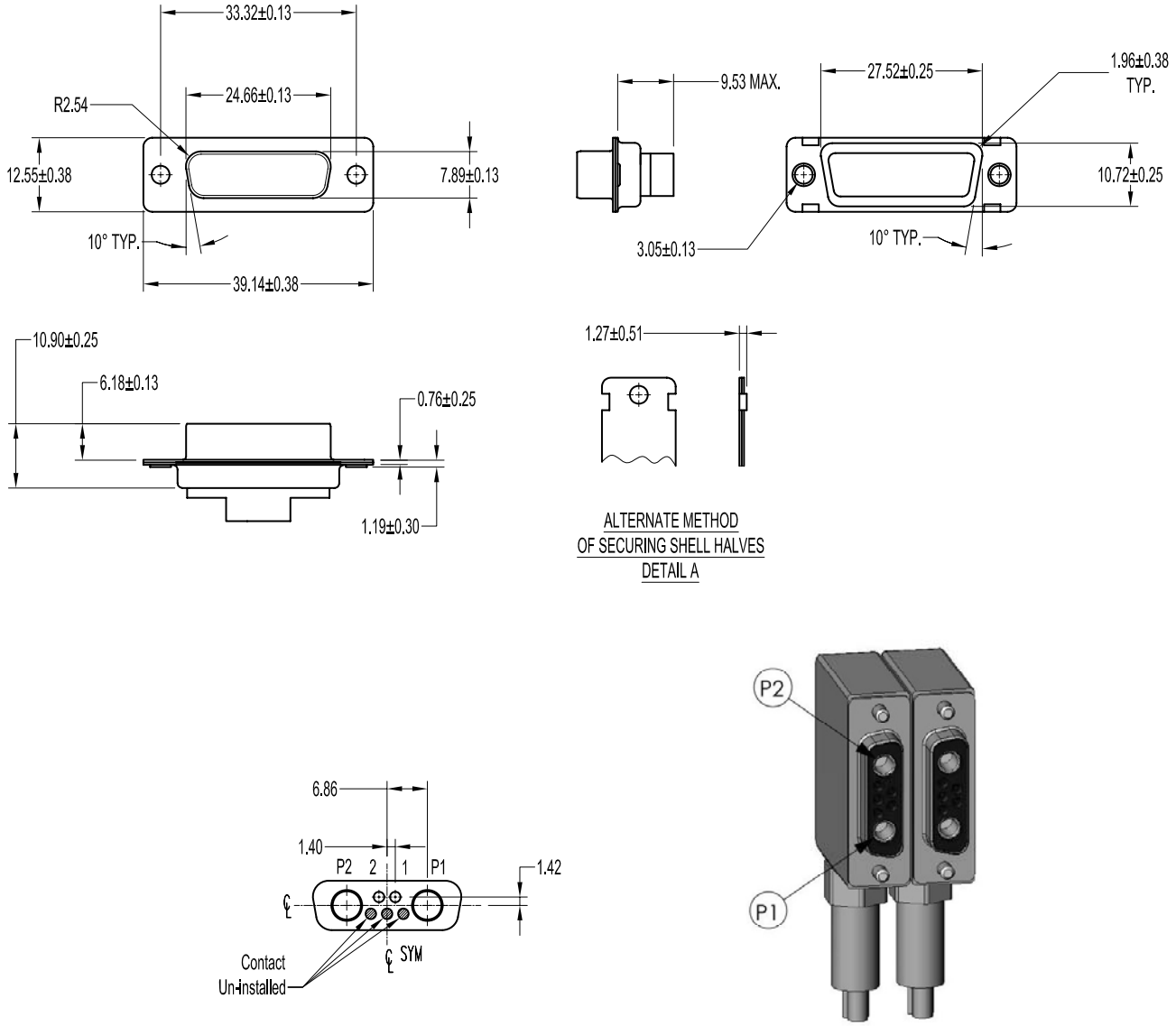

Property of CERN - For Internal Use Only – External Distribution Prohibited

Requirements

REQ 7.137 In order to ensure the intended Connector functionality and compatibility, the 48 V and the 60 V Power Module Input Connector mounted on the cable side **should** have the dimensions specified in Figure 7-25.

REQ 7.138 The shape of the parts **may** deviate from the drawing in Figure 7-25, as long as the specified dimensions are not affected and the intended functionality is provided.

7.5.2.3 24 V Connector Module side

Figure 7-26 Mating interface dimensions of 24 V Power Module Input Connector mounted on Module

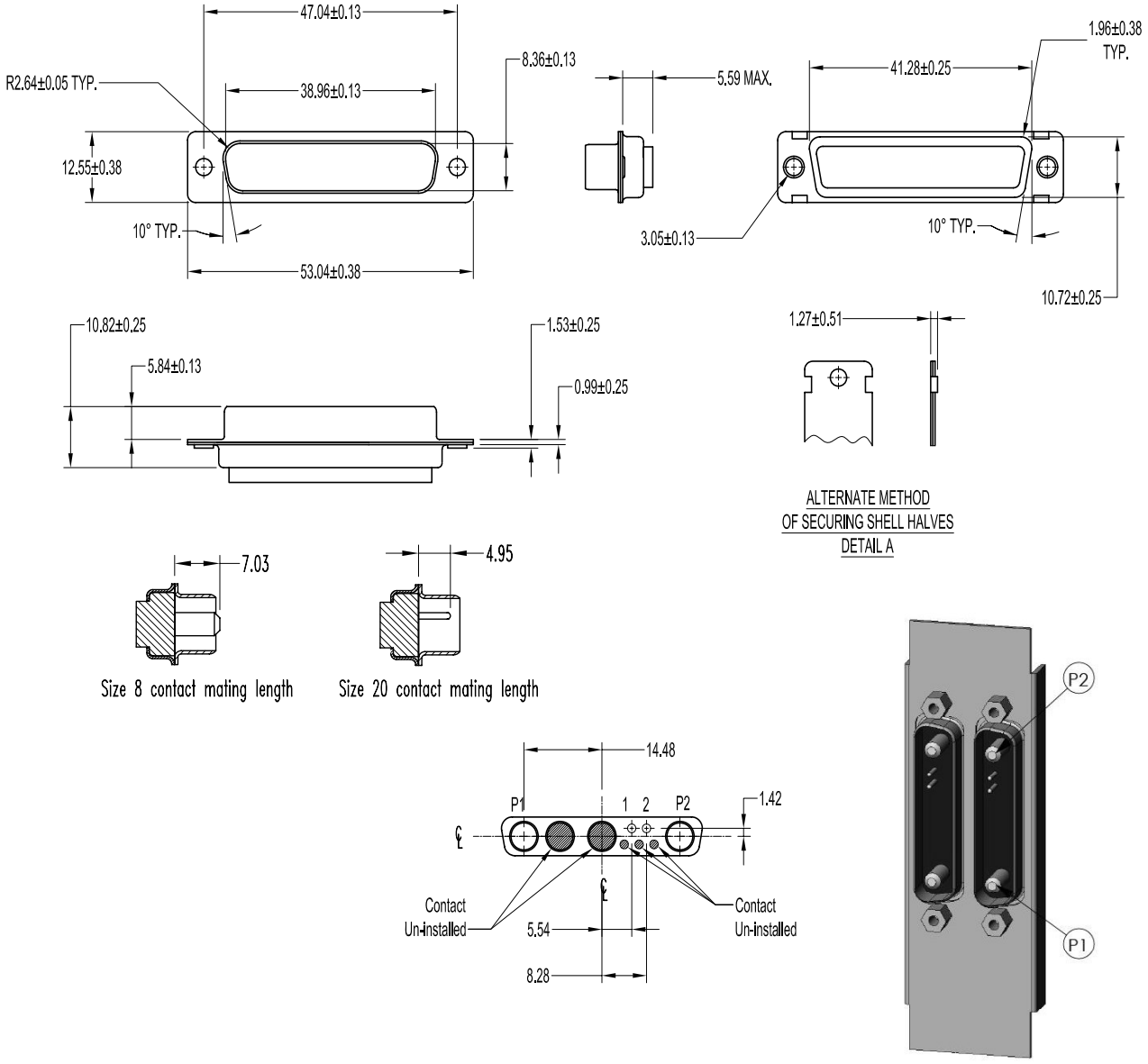

Property of CERN - For Internal Use Only – External Distribution Prohibited

Requirements

REQ 7.139 In order to ensure the intended Connector functionality and compatibility, the 24 V Power Module Input Connector mounted on Module **should** have the dimensions specified in Figure 7-26.

REQ 7.140 The shape of the parts **may** deviate from the drawing in Figure 7-26, as long as the specified dimensions are not affected and the intended functionality is provided.

7.5.2.4 24 V Connector cable side

Figure 7-27 Mating interface dimensions of 24 V Power Module Input Connector on cable side

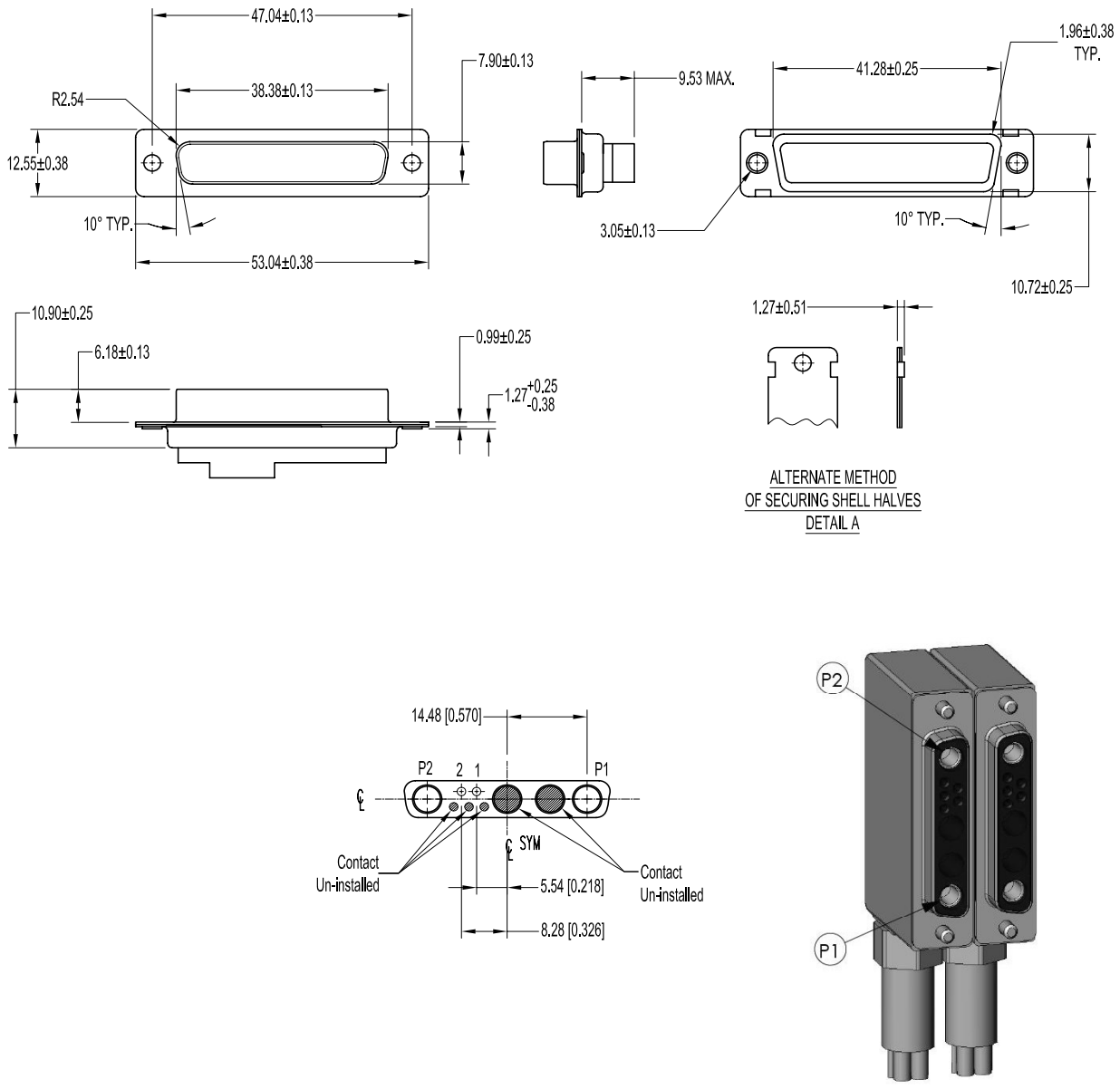

Property of CERN - For Internal Use Only – External Distribution Prohibited

Requirements

REQ 7.141 In order to ensure the intended Connector functionality and compatibility, the 24 V Power Module Input Connector mounted on the cable side **should** have the dimensions specified in Figure 7-27.

REQ 7.142 The shape of the parts **may** deviate from the drawing in Figure 7-27, as long as the specified dimensions are not affected and the intended functionality is provided.

7.5.2.5 Retention mechanism

Requirements

REQ 7.143 Power Module Input Connector **shall** have a positive retention mechanism to withstand unmating the Connector by pulling cable.

Figure 7-28 Retention mechanism for Power Module Input Connector (example: jack screw)

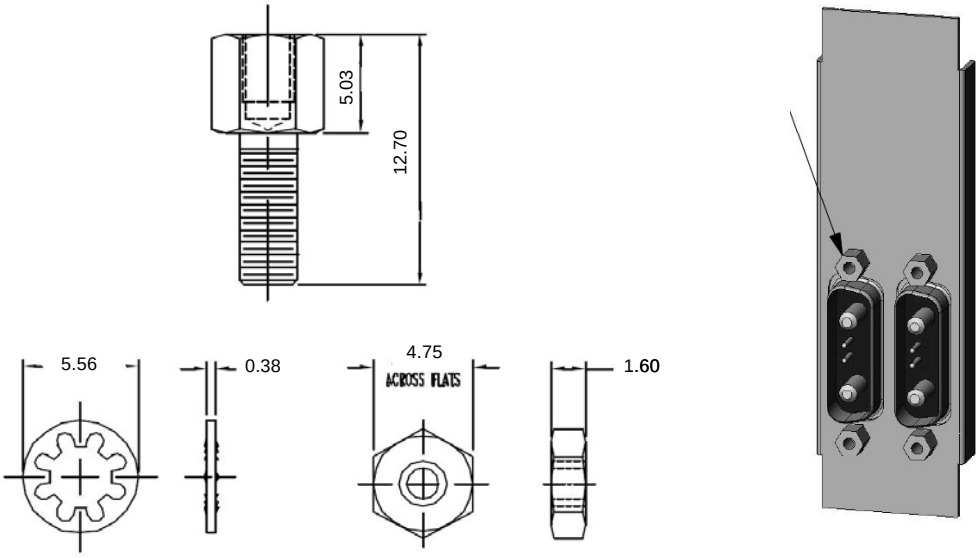

Property of CERN - For Internal Use Only – External Distribution Prohibited

Figure 7-29 Retention mechanism for Power Module Input Connector (example: cable lock screw)

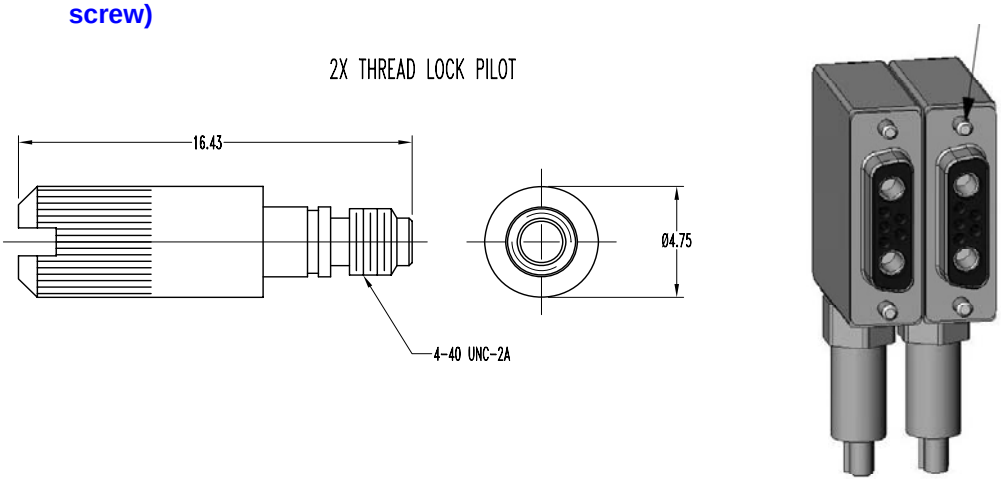

7.5.3 Electrical characteristics for Power Module Input Connector

7.5.3.1 Creepage clearance

Condition: IEC 60 664-1

Table 7-30 Creepage clearance distances

Between Power Contacts	Minimum 1.5 mm
Between Signal Contacts	Minimum 0.4 mm
Between Signal and Power Contacts	Minimum 1.5 mm
Between Power Contacts and Shelf GND	Minimum 1.5 mm
Between Signal Contacts and Shelf GND	Minimum 1.5 mm

Requirement

REQ 7.144 Under the conditions stated above, the Creepage and clearance distance between the conductors inside the Power Module Input Connector **shall** be the value specified in Table 7-30.

Property of CERN - For Internal Use Only – External Distribution Prohibited

7.5.3.2 Insulation voltage-proof

Conditions: IEC 60512-4-1
Standard atmospheric conditions
Mated and unmated condition
Wiring arrangement according to Section 7.7.1.2, "Specimen Set 2: Insulation resistance and voltage-proofing measurement."

Table 7-31 Rated insulation voltages

	Insulation voltage
Signal Contact to Signal Contact	1,000 V r.m.s.
Power Contact to Power Contact	1,000 V r.m.s.
Power Contact to Signal Contact	1,000 V r.m.s.
Signal Contact to Shelf GND	1,000 V r.m.s.
Power Contact to Shelf GND	1,000 V r.m.s.

Requirement

REQ 7.145 Under the conditions stated in Table 7-31, all insulation voltages between all conductors inside the Power Module Input Connector **shall** be minimum of 1,000 V r.m.s.

7.5.3.3 Current-carrying capacity

Conditions: IEC 60512-5-2
Standard atmospheric conditions
Wiring arrangement in Figure 7-41

Property of CERN - For Internal Use Only – External Distribution Prohibited

Table 7-32 Current rating

	Current Rating (With IEC 60512 Derating)	Current Rating	Temperature Rise
Signal Conductor	0.3 A/pin	0.375 A/pin	30°C Maximum
48 V Connector Power Conductor	19.2 A/pin	24.0 A/pin	30°C Maximum
24 V Connector Power Conductor	39.2 A/pin	49.0 A/pin	30°C Maximum

Requirements

REQ 7.146 The Power Module Input Connectors **shall** be able to perform at 100 °C temperature condition, which includes a 30 °C temperature rise by current distribution from 70 °C maximum ambient temperature.

REQ 7.147 Under the conditions stated above and Table 7-32, the current-carrying capability of each signal conductor inside the Power Module Input Connector **shall** be 0.375 A minimum, which includes a 20% margin on rated current in accordance with IEC 60512-5-2.

REQ 7.148 Under the conditions stated above and Table 7-32, the current-carrying capability of each power conductor inside the 48 V and the 60 V Power Module Input Connector **shall** be 24.0 A minimum, which includes a 20% margin on rated current in accordance with IEC 60512-5-2.

REQ 7.149 Under the conditions stated above and Table 7-32, the current-carrying capability of each power conductor inside the 24 V Power Module Input Connector **shall** be 49.0 A minimum, which includes a 20% margin on rated current in accordance with IEC 60512-5-2.

7.5.3.4 Contact resistance

Conditions: IEC 60512-2-1
Standard atmospheric conditions
Mated Condition
Connecting points as specified Section 7.7.1.1, “Specimen Set 1: Contact resistance measurement.”

Property of CERN - For Internal Use Only – External Distribution Prohibited

Table 7-33 Maximum contact resistance change

	Maximum change in relation to initial value
Signal Conductor	10 milli Ohms
Power Conductor	10 milli Ohms

Requirement

REQ 7.150 The contact resistance value change **shall not** exceed the values given in Table 7-33, after the tests specified in Section 7.7, "Test schedule." .

7.5.3.5 Insulation resistance

Conditions: IEC 60512-3-1
Standard atmospheric conditions
Method B; see arrangement in Table 7-34
Mated Condition
Test voltage 1,000 V DC

Table 7-34 Minimum insulation resistances

	Initial value	After moisture
Between Signal conductors	5,000M Ohms	500M Ohms
Between Power Conductors	5,000M Ohms	500M Ohms
Between Power and Signal Conductors	5,000M Ohms	500M Ohms
Between Signal Conductors and Shelf GND	5,000M Ohms	500M Ohms
Between Power Conductors and Shelf GND	5,000M Ohms	500M Ohms

Requirements

REQ 7.151 Under the conditions stated above, the minimum initial insulation resistance between conductors in the Power Module Input Connector as defined in Table 7-34 **shall** be 5,000M Ohms.

REQ 7.152 After applying the moisture tests specified in Section 7.7.2.3, "Group C - Thermal shock and moisture," the minimum insulation resistance of Power Module Input Connector **shall not** drop below 500M Ohms.

Property of CERN - For Internal Use Only – External Distribution Prohibited

7.5.3.6 Engagement under electrical load

Requirement

REQ 7.153 All contacts **shall** tolerate 200 cycles of powered engagement into a load exhibiting an input characteristic of 5 V at 0.2 A maximum current without degradation of the Connector performance.

7.5.3.7 Cable Connector contact touch-safe

Requirement

REQ 7.154 The electrical contacts on the cable side of Power Module Input Connector **shall** be touch-safe with the test finger specified in IEC 60950-1 Figure 2A.

7.5.4 Power Module Input Connector mechanical characteristics

7.5.4.1 Mechanical operation

Conditions: IEC 60512-5 Test 9a
Standard atmospheric conditions
Speed of operations: 10 mm per sec. maximum, rest 5 sec. (unmated)

Requirement

REQ 7.155 The Power Module Input Connector **shall** withstand 200 mating cycles without damage that would impair normal operation.

7.5.4.2 Engaging and separating forces

Conditions: IEC 60512-13-1
Standard atmospheric conditions
Rate of engagement and separation: 10 mm per sec. maximum

Table 7-35 Engaging and separating forces

Mating sides	Force
Maximum engaging force	100 N
Maximum separating force	65 N
Maximum bottoming force	200 N

Requirements

REQ 7.156 Under the conditions stated above, the force needed to engage the Power Module Input Connectors **shall not** exceed the values given in Table 7-35.

REQ 7.157 Under the conditions stated above, the force needed to disengage the Power Module Input Connectors **shall not** exceed the values given in Table 7-35.

Property of CERN - For Internal Use Only – External Distribution Prohibited

REQ 7.158 Under the conditions stated above, the Power Module Input Connector **shall** withstand to 200 N at 1-minute duration of Connector insertion-bottoming force, without damage that would impair normal operation.

7.5.4.3 Vibration (sinusoidal)

Conditions: IEC 60512-6-4
Standard atmospheric conditions
Mated Condition
The specimen shall be installed in a suitable fixture according to Figure 7-51

Table 7-36 Vibration

Severity
10 Hz to 500 Hz with an amplitude of 0.35 mm or an acceleration of 50 m/s^2 eight sweepings in each direction, duration 3x8 h/axis, in three axes (32 sweepings in each direction)

Requirement

REQ 7.159 Under the conditions stated above, and with the vibration severity applied as specified in Table 7-36, the Power Module Input Connectors **shall not** have contact disturbance longer than 1 µs.

7.5.4.4 Shock

Conditions: IEC 60512-6-3
Standard atmospheric conditions
Mated Condition
The specimen shall be installed in a suitable fixture according to Figure 7-51.

Table 7-37 Shock

Severity
Shock acceleration 300 m/s^2, duration of impact 11 ms Three shocks in two directions/axis, in three axes (18 shocks in total)

Requirement

REQ 7.160 Under the conditions stated above, and with the shock severity applied as specified in Table 7-37, the Power Module Input Connectors **shall not** have contact disturbance longer than 1 µs.

Property of CERN - For Internal Use Only – External Distribution Prohibited

7.5.4.5 Retention force of cable Connector

Requirement

REQ 7.161 The retention mechanism of the Power Module Input Connector mating interface **shall** be withstand to 100 N at a 1-minute duration of straight cable pulling force without any permanent distortion or damage that would impair normal operation of the Connector.

7.6 AdvancedMC Auxiliary Connector

¶ 36 To add connectivity to AdvancedMC Modules, the AdvancedMC Module and the Backplane may use additional Auxiliary Connectors in the location shown Figure 7-30 in combination with the AdvancedMC Backplane Connector as specified in Section 7.2.

¶ 37 Additional design considerations are required when the Auxiliary Connector is used with an AdvancedMC Backplane Connector. The tolerance stack up on these Connectors create mis-alignment which may cause of damaging the Connector, short-circuit, and contact-off problems.

Figure 7-30 Auxiliary Connector location

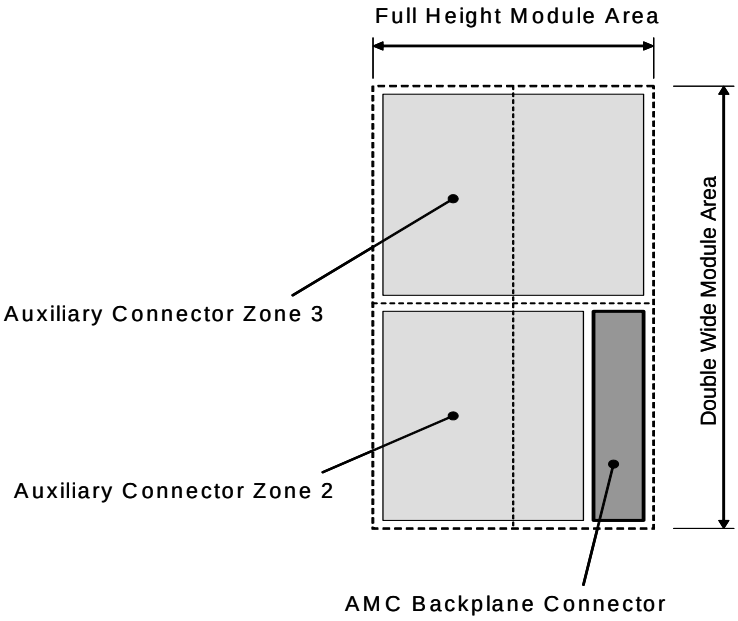

Requirements

REQ 7.162 The Auxiliary Connector **shall not** obstruct mating condition between the AdvancedMC Module and the AdvancedMC Backplane Connector.

REQ 7.163 The AdvancedMC Module **shall** always bottom on the AdvancedMC Backplane Connector, even when used with an Auxiliary Connector in combination.

REQ 7.164 The vertical guiding **shall** be always performed by AdvancedMC Backplane Connector, even when used with an Auxiliary Connector in combination.

Property of CERN - For Internal Use Only – External Distribution Prohibited

7.7 Test schedule

¶ 38 This section defines six groups of Connector test requirements referenced from GR-1217-CORE. These are applicable to all Connectors mounted on a MicroTCA system.

- Test Group A: Mixed Flowing Gas
- Test Group B: Mechanical Endurance and Dust
- Test Group C: Thermal Shock and Moisture
- Test Group D: High temperature
- Test Group E: Electrical Load Temperature Rise
- Test Group F: Signal Integrity Validation

7.7.1 Specimen measurement arrangements

¶ 39 Different test PCBs and measurement arrangements are needed on specimens for each of the following measurement criteria:

- Set 1: Contact Resistance Measurement Arrangement
- Set 2: Insulation Resistance and Voltage-proofing Measurement Arrangement
- Set 3: Current Carrying Capacity Measurement Arrangement
- Set 4: Contact Disturbance Measurement Arrangement
- Set 5: Signal Integrity Measurement Arrangement

7.7.1.1 Specimen Set 1: Contact resistance measurement

Figure 7-31 Set 1: AdvancedMC Backplane Connector contact resistance measurement arrangement

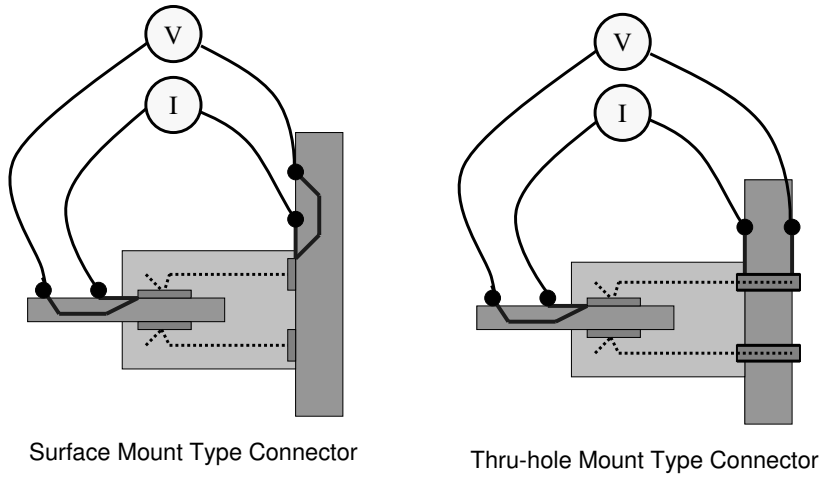

Property of CERN - For Internal Use Only – External Distribution Prohibited

Figure 7-32 Set 1: MCH (individual Board style) contact resistance measurement arrangement

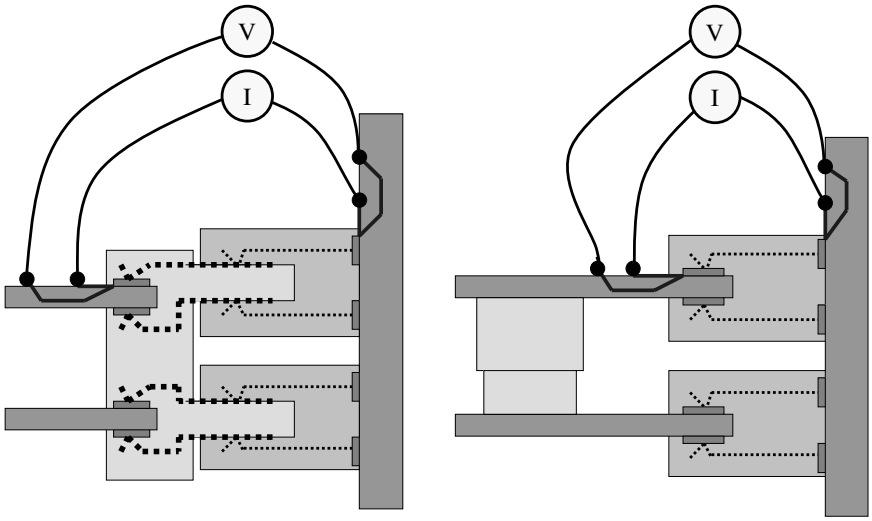

Plug Style MCH Interface

Card Edge Style MCH Interface

Figure 7-33 Set 1: MCH (integrated style) contact resistance measurement arrangement

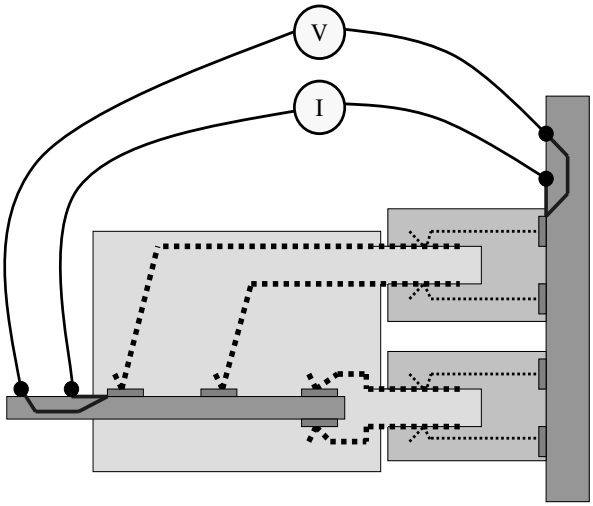

Property of CERN - For Internal Use Only – External Distribution Prohibited

Figure 7-34 Set 1: Power Module Output Connector contact resistance measurement arrangement

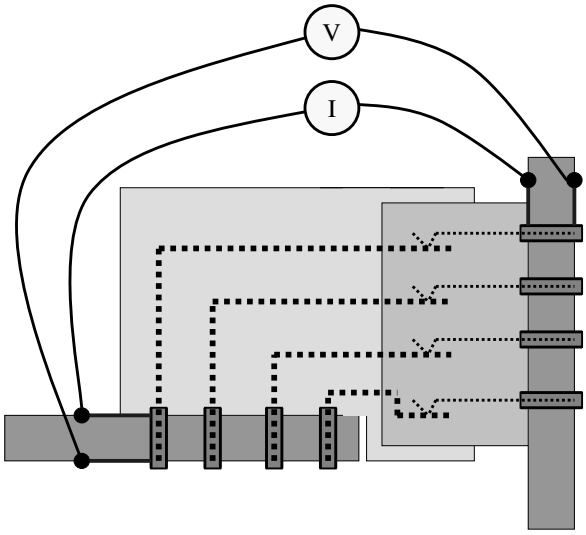

Figure 7-35 Set 1: Power Module Input Connector contact resistance measurement arrangement

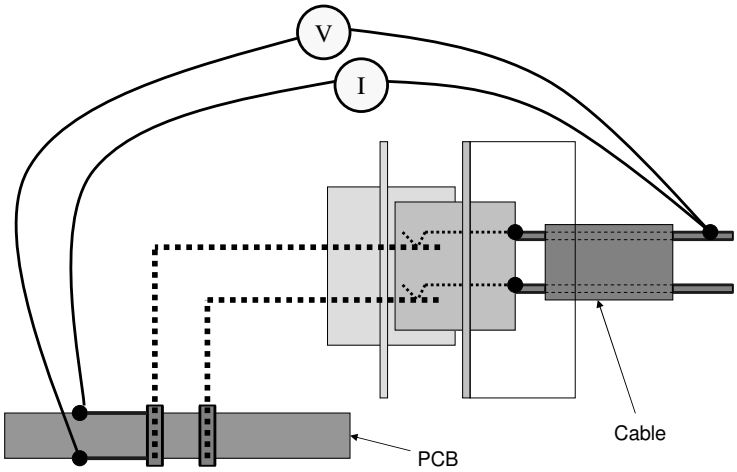

Property of CERN - For Internal Use Only – External Distribution Prohibited

7.7.1.2 Specimen Set 2: Insulation resistance and voltage-proofing measurement

Figure 7-36 Set 2: AdvancedMC and MCH insulation resistance and voltage-proof measurement arrangement

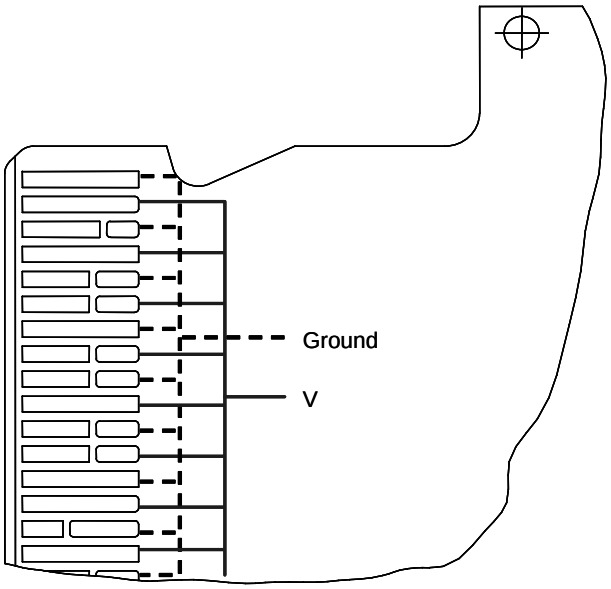

Figure 7-37 Set 2: Power Module Output Connector insulation resistance and voltage-proof measurement arrangement

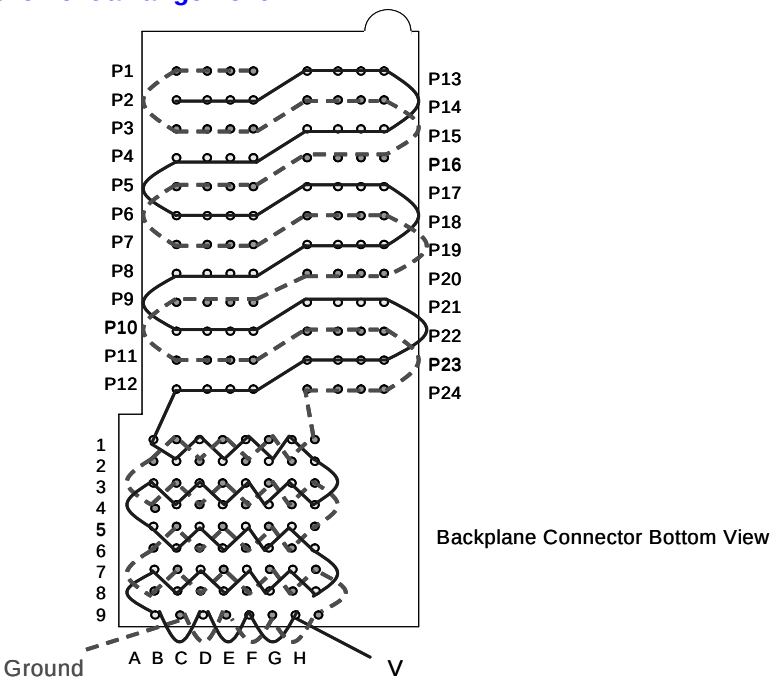

Property of CERN - For Internal Use Only – External Distribution Prohibited

Figure 7-38 Set 2: Power Module Input Connector insulation resistance and voltage-proof measurement arrangement

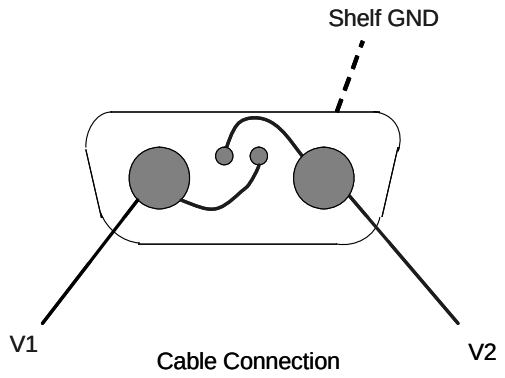

7.7.1.3 Specimen Set 3: Current-carrying capacity proofing measurement

Figure 7-39 Set 3: AdvancedMC and MCH current-carrying capacity measurement wiring arrangement

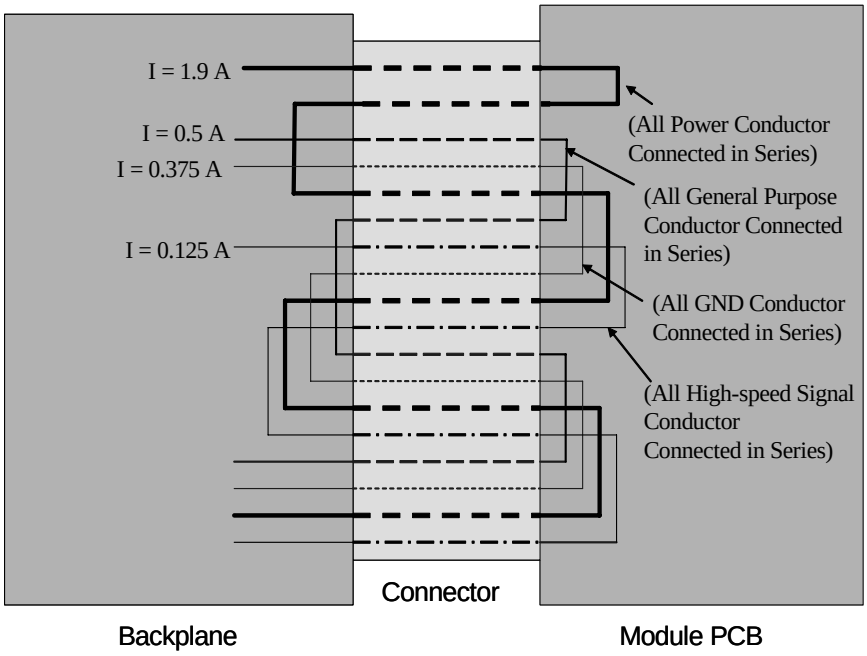

Property of CERN - For Internal Use Only – External Distribution Prohibited

Table 7-38 AdvancedMC and MCH current-carrying capacity, test current combination on each conductor in a connector

	Power Conductor	General Purpose Conductor	GND Conductor	High-speed Signal Conductor
Test Current Combination for Power Conductor Current Capability Verification	1.9 A	Minimum 0.4 A	Minimum 0.3 A	Minimum 0.1 A
Test Current Combination for General Purpose Conductor Current Capability Verification	Minimum 1.14 A	0.5 A	Minimum 0.3 A	Minimum 0.1 A
Test Current Combination for GND Conductor Current Capability Verification	Minimum 1.14 A	Minimum 0.4 A	0.375 A	Minimum 0.1 A
Test Current Combination for High-speed Signal Conductor Current Capability Verification	Minimum 1.14 A	Minimum 0.4 A	Minimum 0.3 A	0.125 A

Figure 7-40 Set 3: Power Module Output Connector current-carrying capacity measurement arrangement

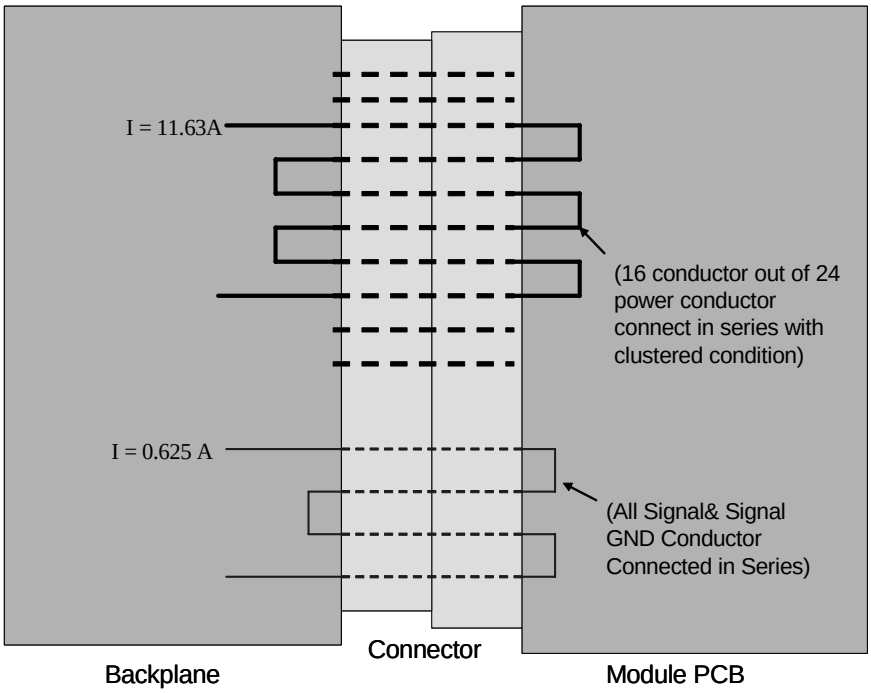

Property of CERN - For Internal Use Only – External Distribution Prohibited

Figure 7-41 Set 3: Power Module Input Connector current-carrying capacity measurement arrangement

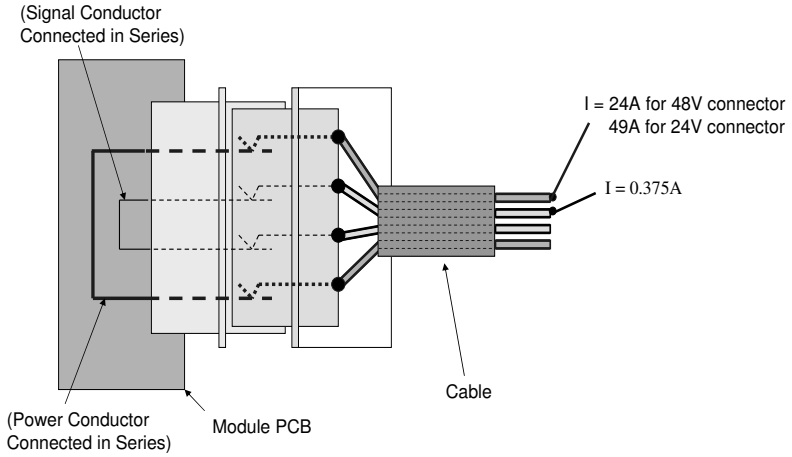

7.7.1.4 Specimen Set 4: Contact disturbance measurement

Figure 7-42 Set 4: AdvancedMC Backplane Connector, MCH Connector, and power output Connector contact disturbance measurement arrangement

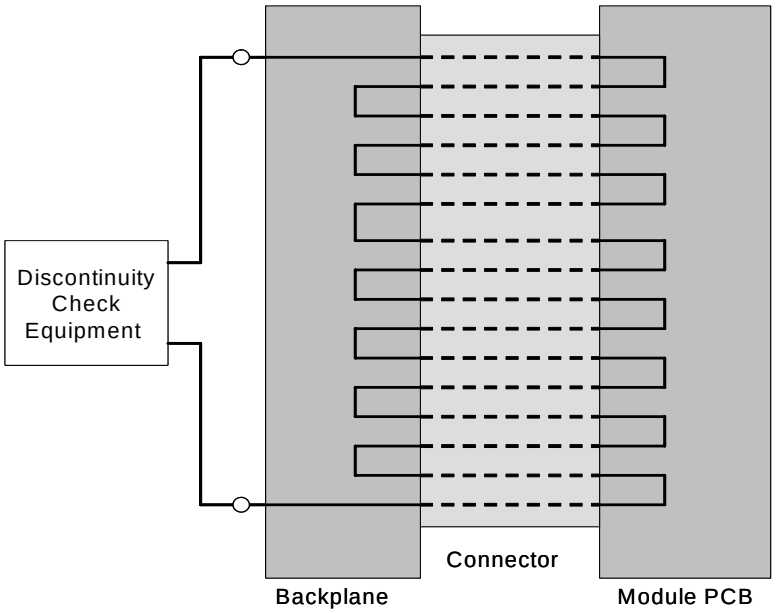

Property of CERN - For Internal Use Only – External Distribution Prohibited

Figure 7-43 Set 4: Power Module Input Connector contact disturbance measurement arrangement

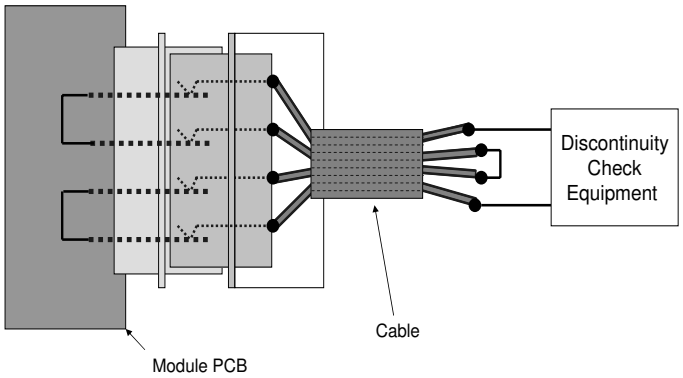

7.7.1.5 Specimen Set 5: Signal integrity validation

Figure 7-44 Set 5: AdvancedMC Backplane Connector signal integrity measurement arrangement

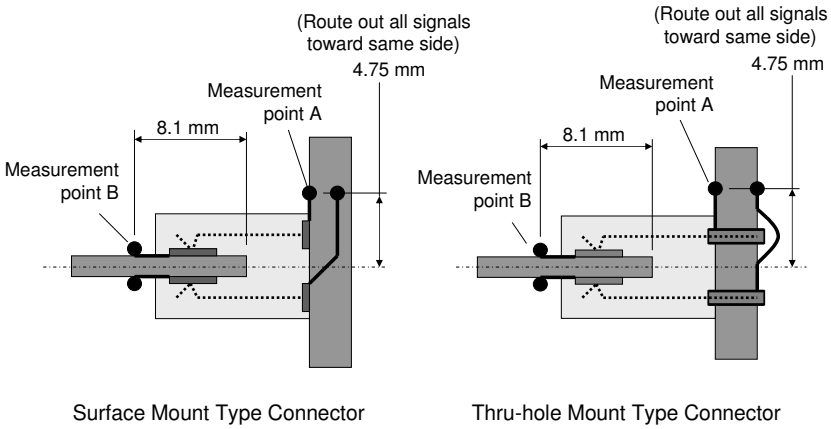

Figure 7-45 Set 5: MCH card edge-style interface signal integrity measurement arrangement

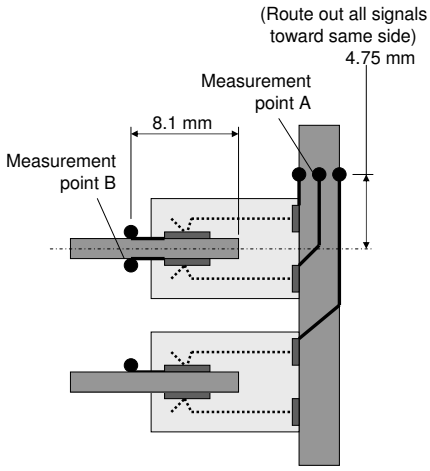

Property of CERN - For Internal Use Only – External Distribution Prohibited

Figure 7-46 Set 5: MCH plug (individual Board style) signal integrity measurement arrangement

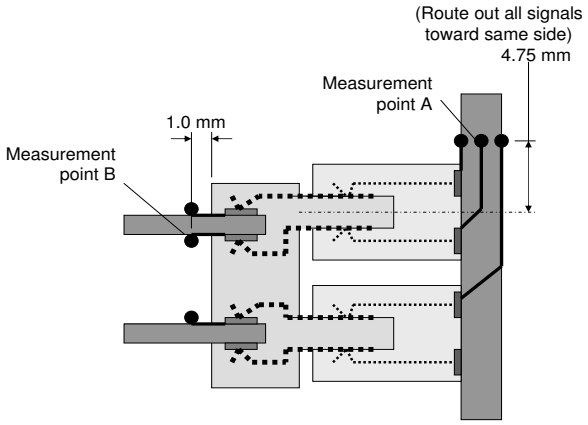

Figure 7-47 Set 5: MCH plug (integrated style) signal integrity measurement arrangement

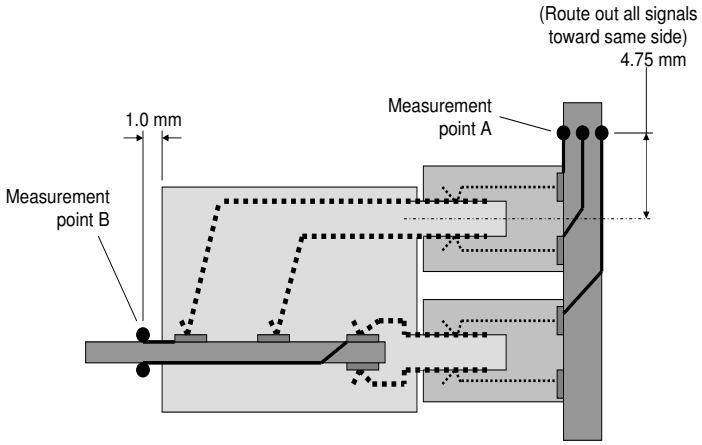

Figure 7-48 Set 5: Cross-talk measurement condition

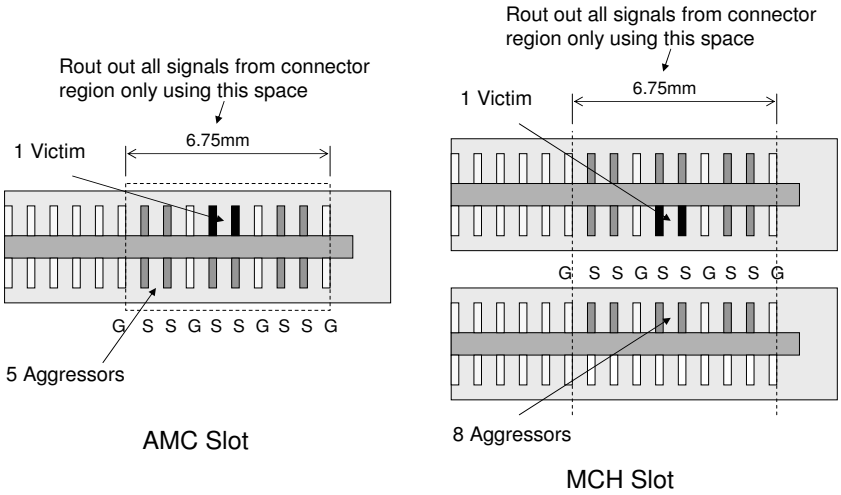

Property of CERN - For Internal Use Only – External Distribution Prohibited

Table 7-39 List of conditions defined on the signal integrity test report

Test board conditions required to be defined on the test report (Both for the backplane and the module test board)
• Board thickness • Board material • Number of layers • Location of tested signal layer in cross section • GND layer location in cross section • Through hole (via-hole) layout • Through hole (via-hole) dimensions • Trace line layout routing pass between through holes (via-holes) • Any of special materials and techniques (Blind vias, Counterboring, etc,.)

7.7.1.6 Shock and vibration test setup

Figure 7-49 AdvancedMC and MCH Connector shock/vibration test setup

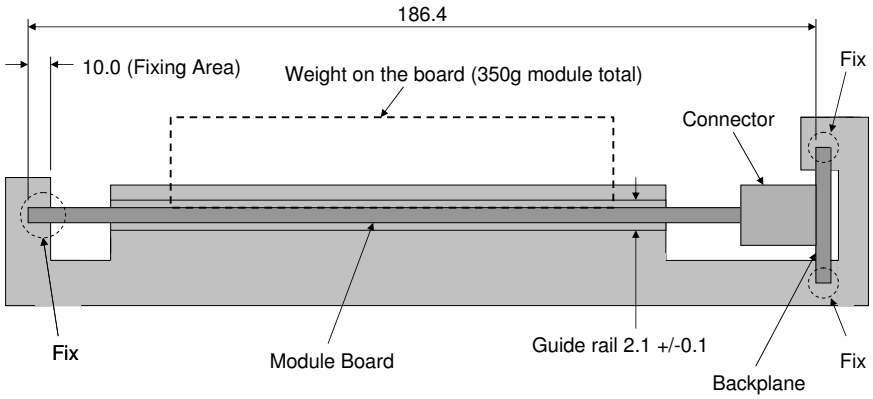

Figure 7-50 Power Module Output Connector shock/vibration test setup

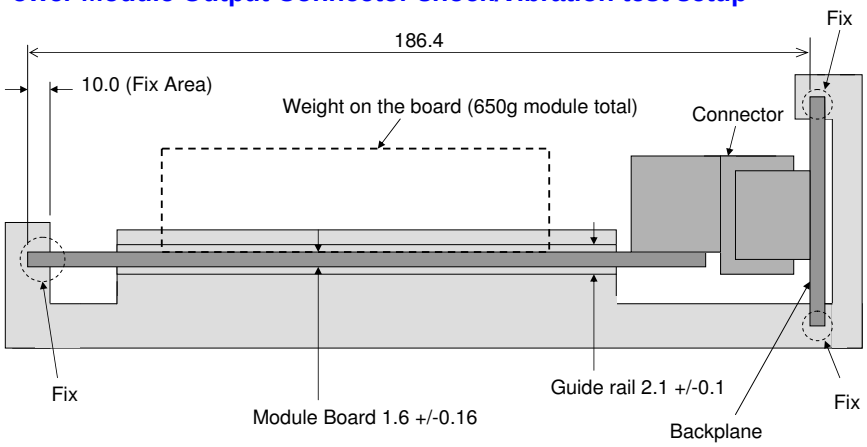

Property of CERN - For Internal Use Only – External Distribution Prohibited

Figure 7-51 Power Module Input Connector shock/vibration test setup

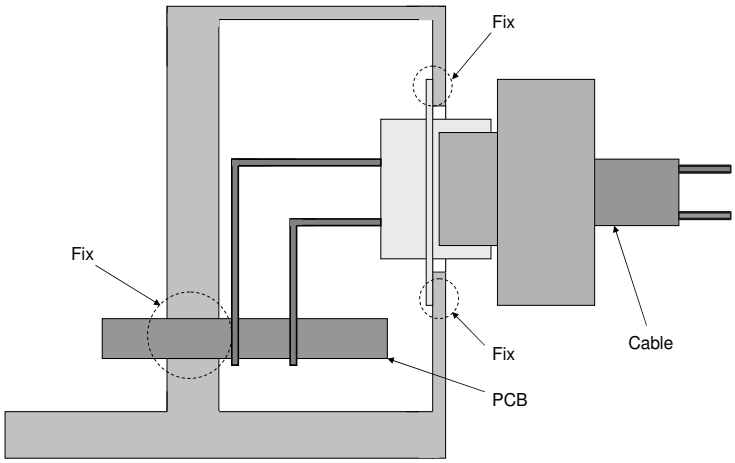

7.7.2 Test schedule tables

Requirements

REQ 7.165 Unless otherwise specified, mated sets of Connectors and test Boards **shall** be tested as a specimen.

REQ 7.166 The test Connectors **shall** be randomly sampled from the production line.

REQ 7.167 The test Connectors **shall** comply with those specified dimensions in Section 7.

¶ 40 The number of specimens on each test group are shown in Table 7-38.

Table 7-40 Number of specimen on each test group

Test groups	Measurement Arrangement					
	Total	Set 1	Set 2	Set 3	Set 4	Set 5
Group A	7	4	3			
Group B	10	4	3		3	
Group C	10	4	3		3	
Group D	7	4	3			
Group E	3			3		
Group F	3					3

¶ 41 The AdvancedMC Connectors have a mechanical lifetime of 200 cycles. The Module PCBs have only 50 cycles of lifetime. In order to make up for the difference, some ‘mating cards’ which are only used for 50 mechanical operation cycles may be adopted. The contact pads of the ‘mating cards’ are according to the Module PCB specification; however, the cards are not used for measurement purposes and may have a simplified layout.

Property of CERN - For Internal Use Only – External Distribution Prohibited

Table 7-41 Test table summary

Connector	Conducted Test Group
AdvancedMC Connector	A, B, C, D, E, F
MCH Connector	A, B, C, D, E, F
Power Module Output Connector	A, B, C, D, E
Power Module Input Connector	A, B, C, D, E

Requirements

REQ 7.168 AdvancedMC Connector tests **shall** be conducted as listed in Table 7-41.

REQ 7.169 MCH Connector tests **shall** be conducted as listed in Table 7-41.

REQ 7.170 Power Module Output Connector tests **shall** be conducted as listed in Table 7-41.

REQ 7.171 Power Module Input Connector tests **shall** be conducted as listed in Table 7-41.

Property of CERN - For Internal Use Only – External Distribution Prohibited

7.7.2.1 Group A - Mixed flowing gas

Table 7-42 Group A - Mixed flowing gas testing sequence

Test phase	Title	Specimen	Severity or condition of test	Measurement to be performed	Referenced Standard	Requirements
A1	General examination	Set 1 Set 2	Unmated and unmounted Connectors	Visual examination	IEC 60512-1-1	There **shall** be no defect that would impair normal operation.
A2	Contact normal force	Set 1		Contact force	EIA-364-04	This is for design verification purpose and no requirement. (Preferred = 0.98 N minimum)
A3	Engaging/ Separating Force	Set 2	Speed = 10 mm/s max. Plug-in card insertion and extraction	Engaging and separating forces	IEC 60512-13-1	Specified in Section 7.2.6.2, Section 7.3.7.2, Section 7.4.5.2 and Section 7.5.4.2
A4	Insulation tests	Set 2	See Section 7.2.4.5, Section 7.3.5.6, Section 7.4.4.5 and Section 7.5.3.5 Mated Condition	insulation resistance	IEC 60512-3-1	Specified in Section 7.2.4.5, Section 7.3.5.6, Section 7.4.4.5 and Section 7.5.3.5
A5	Voltage stress tests	Set 2	See Section 7.2.4.2, Section 7.3.5.4, Section 7.4.4.2 and Section 7.5.3.2 Mated Condition	Voltage-proof	IEC 60512-4-1	Specified in Section 7.2.4.2, Section 7.3.5.4, Section 7.4.4.2 and Section 7.5.3.2. (There **shall** be no breakdown or flashover)
A6	Contact Resistance	Set 1	Max. voltage = 20 mV in open circuit Max. current = 100 mA	Contact resistance	IEC 60512-2-1	Specified in Section 7.2.4.4, Section 7.3.5.1, Section 7.4.4.4 (Power Input Connector = No initial requirement)
A7	Mechanical operation	Set 1 Set 2	Speed = 10 mm/s max. Rest 5 s (unmated) Initial 100 operations	Pre-wear	IEC 60512-5.9a	
		Set 1	Max. voltage = 20 mV in open circuit Max. current = 100 mA	Contact resistance	IEC 60512-2-1	Specified in Section 7.2.4.4, Section 7.3.5.1, Section 7.4.4.4 and Section 7.5.3.4
A8	High Temper-ature (Option)	Set 1 Set 2	Mated Connectors Ambient temperature 105° C No electrical load Duration 300 h Recovery time 2 h	Temperature Life	EIA-364-17	This section is out of GR-1217-CORE requirement, but preferred to add for tighter environment application use
		Set 1	Max voltage = 20 mV in open circuit Max current = 100 mA	Contact resistance	IEC 60512-2-1	This section is out of GR-1217-CORE requirement, but preferred to add for tighter environment application use Change in relation to initial values, Specified in Section 7.2.4.4, Section 7.3.5.1, Section 7.4.4.4 and Section 7.5.3.4

Property of CERN - For Internal Use Only – External Distribution Prohibited

Table 7-42 Group A - Mixed flowing gas testing sequence (continued)

Test phase	Title	Specimen	Severity or condition of test	Measurement to be performed	Referenced Standard	Requirements
A9	Corrosion, industrial atmosphere	Set 1 Set 2	Central office environmental applications: Connector 5 days NO_2: 200ppb(+/-50) Cl_2: 10ppb(+/-3) H_2S:10ppb(+/-5) SO_2: 100ppb(+/-20) Uncontrolled environment application: Unmated Connector 5 days NO_2: 200ppb(+/-50) Cl_2: 20ppb(+/-5) H_2S:100ppb(+/-20) SO_2: 200ppb(+/-50)	Mixed flowing gas	EIA-364-65 Class IIA/ IIIA	
		Set 1	Max. voltage = 20 mV in open circuit Max. current = 100 mA	Contact resistance	IEC 60512-2-1	Change in relation to initial values, Specified in Section 7.2.4.4, Section 7.3.5.1, Section 7.4.4.4 and Section 7.5.3.4
		Set 1 Set 2	Central office environmental applications: Connector 5 days NO_2: 200ppb(+/-50) Cl_2: 10ppb(+/-3) H_2S:10ppb(+/-5) SO_2: 100ppb(+/-20) Uncontrolled environment application: Unmated Connector 5 days NO_2: 200ppb(+/-50) Cl_2: 20ppb(+/-5) H_2S:100ppb(+/-20) SO_2: 200ppb(+/-50)	Mixed flowing gas	EIA-364-65 Class IIA/ IIIA	

Property of CERN - For Internal Use Only – External Distribution Prohibited

Table 7-42 Group A - Mixed flowing gas testing sequence (continued)

Test phase	Title	Specimen	Severity or condition of test	Measurement to be performed	Referenced Standard	Requirements
A9 (Continued)	Corrosion, industrial atmosphere (Continued)	Set 1	Max. voltage = 20 mV in open circuit Max. current = 100 mA	Contact resistance	IEC 60512-2-1	Change in relation to initial values, Specified in Section 7.2.4.4, Section 7.3.5.1, Section 7.4.4.4 and Section 7.5.3.4
		Set 1 Set 2	Uncontrolled environment application: Mated Connector 5 days NO_2: 200ppb(+/-50) Cl_2: 20ppb(+/-5) H_2S:100ppb(+/-20) SO_2: 200ppb(+/-50)	Mixed flowing gas	EIA-364-65 Class IIIA	This section is applied only for uncontrolled environment application test.
		Set 1	Max. voltage = 20 mV in open circuit Max. current = 100 mA	Contact resistance	IEC 60512-2-1	This section is applied only for uncontrolled environment application test. Change in relation to initial values, Specified in Section 7.2.4.4, Section 7.3.5.1, Section 7.4.4.4 and Section 7.5.3.4
		Set 1 Set 2	Uncontrolled environment application: Mated Connector 5 days NO_2: 200ppb(+/-50) Cl_2: 20ppb(+/-5) H_2S:100ppb(+/-20) SO_2: 200ppb(+/-50)	Mixed flowing gas, uncontrolled environment	EIA-364-65 Class IIIA	This section is applied only for uncontrolled environment application test.
A9 (Continued)	Corrosion, industrial atmosphere (Continued)	Set 1	Max. voltage = 20 mV in open circuit Max. current = 100 mA	Contact resistance	IEC 60512-2-1	This section is applied only for uncontrolled environment application test. Change in relation to initial values, Specified in Section 7.2.4.4, Section 7.3.5.1, Section 7.4.4.4 and Section 7.5.3.4
		Set 1	Disturb Module PCB slightly from Connector, and then reseat.	Minute disturbance	GR-1217-CORE, 9.1.3.2 paragraph 7; 9.1.3.3, paragraph7	
		Set 1	Max. voltage = 20 mV in open circuit Max. current = 100 mA	Contact resistance	IEC 60512-2-1	Change in relation to initial values, Specified in Section 7.2.4.4, Section 7.3.5.1, Section 7.4.4.4 and Section 7.5.3.4

Property of CERN - For Internal Use Only – External Distribution Prohibited

Table 7-42 Group A - Mixed flowing gas testing sequence (continued)

Test phase	Title	Specimen	Severity or condition of test	Measurement to be performed	Referenced Standard	Requirements
A10	Mechanical operation	Set 1 Set 2	Speed = 10 mm/s max. Rest 5 s (unmated) Remaining 100 operations	Post-wear	IEC 60512-5. Test 9a	
		Set 1	Max. voltage = 20 mV in open circuit Max. current = 100 mA	Contact resistance	IEC 60512-2-1	Change in relation to initial values, Specified in Section 7.2.4.4, Section 7.3.5.1, Section 7.4.4.4 and Section 7.5.3.4
A11	Engaging/ Separating Force	Set 2	Speed = 10 mm/s max. Plug-in card insertion and extraction	Engaging and separating forces	IEC 60512-13-1	Specified in Section 7.2.6.2, Section 7.3.7.2, Section 7.4.5.2 and Section 7.5.4.2
A12	Contact normal force	Set 1		Contact force	EIA-364-04	This is for design verification purpose and no requirement. (Preferred = 0.98 N minimum)
A13	General examination	Set 1 Set 2	Unmated Connectors	Visual examination	IEC 60512-1-1	There **shall** be no defect that would impair normal operation.

Property of CERN - For Internal Use Only – External Distribution Prohibited

7.7.2.2 Group B - Mechanical endurance and dust

Table 7-43 Group B - Mechanical endurance and dust testing sequence

Test phase	Title	Specimen	Severity or condition of test	Measurement to be performed	Referenced Standard	Requirements
B1	General examination	Set 1 Set 2 Set 4	Unmated and unmounted Connectors	Visual examination	IEC 60512-1-1	There **shall** be no defect that would impair normal operation.
B2	Contact normal force	Set 1		Contact force	EIA-364-04	This is for design verification purpose and no requirement. (Preferred = 0.98 N minimum)
B3	Engaging/ Separating Force	Set 2	Speed = 10 mm/s max. Plug-in card insertion and extraction	Engaging and separating forces	IEC 60512-13-1	Specified in Section 7.2.6.2, Section 7.3.7.2, Section 7.4.5.2 and Section 7.5.4.2
B4	Insulation tests	Set 2	See Section 7.2.4.5, Section 7.3.5.6, Section 7.4.4.5 and Section 7.5.3.5 Mated Condition	insulation resistance	IEC 60512-3-1	Specified in Section 7.2.4.5, Section 7.3.5.6, Section 7.4.4.5 and Section 7.5.3.5
B5	Voltage stress tests	Set 2	See Section 7.2.4.2, Section 7.3.5.4, Section 7.4.4.2 and Section 7.5.3.2 Mated Condition	Voltage-proof	IEC 60512-4-1	Specified in Section 7.2.4.2, Section 7.3.5.4, Section 7.4.4.2 and Section 7.5.3.2. (There **shall** be no breakdown or flashover)
B6	Contact Resistance	Set 1	Max. voltage = 20 mV in open circuit Max. current = 100 mA	Contact resistance	IEC 605-12-2-1	Specified in Section 7.2.4.4, Section 7.3.5.1, Section 7.4.4.4 (Power Input Connector = No initial requirement)
B7	Mechanical operation	Set 1 Set 2 Set 4	Speed = 10 mm/s max. Rest 5 s (unmated) Initial 100 operations	Pre-wear	IEC 60512-5. Test 9a	
		Set 1	Max. voltage = 20 mV in open circuit Max. current = 100 mA	Contact resistance	IEC 60512-2-1	Change in relation to initial values, Specified in Section 7.2.4.4., Section 7.3.5.1, Section 7.4.4.4 and Section 7.5.3.4

Property of CERN - For Internal Use Only – External Distribution Prohibited

Table 7-43 Group B - Mechanical endurance and dust testing sequence (continued)

Test phase	Title	Specimen	Severity or condition of test	Measurement to be performed	Referenced Standard	Requirements
B8	Dust	Set 1 Set 4	Unmated and mounted Connectors + Module PCB's Benign dust concentration of 300 g/m3 of chamber volume, flow rate = 300 m/s and an exposure time of 1 h. According to GR-1217-CORE, Sections 9.1.1.1 and 9.1.1.2	Dust exposure	EIA-364-91	
		Set 1	Max. voltage = 20 mV in open circuit Max. current = 100 mA	Contact resistance	IEC 60512-2-1	Change in relation to initial values, Specified in Section 7.2.4.4, Section 7.3.5.1, Section 7.4.4.4, Section 7.5.3.4
B9	Vibration	Set 1 Set 2 Set 4	Mounted in fixture according to Figure 7-49, Figure 7-50 and Figure 7-51 Frequency 10 Hz to 500 Hz Amplitude 0.35 mm or 50 m/s² Full duration 3 x 8 h in three axes (32 sweepings in each direction)	Monitored vibration	IEC 60512-6-4	Duration of disturbance: Specified in Section 7.2.6.3, Section 7.3.7.3, Section 7.4.5.3 and Section 7.5.4.3 (1 µs max.)
		Set 1	Max. voltage = 20 mV in open circuit Max. current = 100 mA	Contact resistance	IEC 60512-2-1	Change in relation to initial values, Specified in Section 7.2.4.4, Section 7.3.5.1, Section 7.4.4.4 and Section 7.5.3.4
B10	Shock	Set 1 Set 2 Set 4	Mounted in fixture according to Figure 7-49, Figure 7-50 and Figure 7-51 Shock acceleration 300 m/s² Duration of impact 11 ms Three shocks in two directions along 3 axes (18 shocks total)	Monitored mechanical shock	IEC 60512-6-3	Duration of disturbance: Specified in Section 7.2.6.4, Section 7.3.7.4, Section 7.4.5.4 and Section 7.5.4.4 (1 µs max.)
		Set 1	Max. voltage = 20 mV in open circuit Max. current = 100 mA	Contact resistance	IEC 60512-2-1	Change in relation to initial values, Specified in Section 7.2.4.4, Section 7.3.5.1, Section 7.4.4.4 and Section 7.5.3.4
B11	Mechanical operation	Set 1 Set 2 Set 4	Speed = 10 mm/s max. Rest 5 s (unmated) Remaining 100 operations	Post-wear	IEC 60512-5. Test 9a	
		Set 1	Max. voltage = 20 mV in open circuit Max. current = 100 mA	Contact resistance	IE C 60512-2-1	Change in relation to initial values, Specified in Section 7.2.4.4, Section 7.3.5.1, Section 7.4.4.4 and Section 7.5.3.4

Property of CERN - For Internal Use Only – External Distribution Prohibited

Table 7-43 Group B - Mechanical endurance and dust testing sequence (continued)

Test phase	Title	Specimen	Severity or condition of test	Measurement to be performed	Referenced Standard	Requirements
B12	Engaging/ Separating Force	Set 2	Speed = 10 mm/s max. Plug-in card insertion and extraction	Engaging and separating forces	IEC 60512-13-1	Specified in Section 7.2.6.2, Section 7.3.7.2, Section 7.4.5.2 and Section 7.5.4.2
B13	Insulation tests	Set 2	See Section 7.2.4.5, Section 7.3.5.6, Section 7.4.4.5 and Section 7.5.3.5 Mated Condition	insulation resistance	IEC 60512-3-1	Specified in Section 7.2.4.5, Section 7.3.5.6, Section 7.4.4.5 and Section 7.5.3.5
B14	Voltage stress tests	Set 2	See Section 7.2.4.2, Section 7.3.5.4, Section 7.4.4.2 and Section 7.5.3.2 Mated Condition	Voltage-proof	IEC 60512-4-1	Specified in Section 7.2.4.2, Section 7.3.5.4, Section 7.4.4.2 and Section 7.5.3.2. (There **shall** be no breakdown or flashover)
B15	Contact normal force	Set 1		Contact force	EIA-364-04	This is for design verification purpose and no requirement. (Preferred = 0.98 N minimum)
B16	General examination	Set 1 Set 2 Set 4	Unmated and unmounted Connectors	Visual examination	IEC 60512-1-1	There **shall** be no damage that would impair normal operation.

Property of CERN - For Internal Use Only – External Distribution Prohibited

7.7.2.3 Group C - Thermal shock and moisture

Table 7-44 Group C - Thermal shock and moisture testing sequence

Test phase	Title	Specimen	Severity or condition of test	Measurement to be performed	Referenced Standard	Requirements
C1	General examination	Set 1 Set 2 Set 4	Unmated and unmounted Connectors	Visual examination	IEC 60512-1-1	There **shall** be no defect that would impair normal operation.
C2	Contact normal force	Set 1		Contact force	EIA-364-04	This is for design verification purpose and no requirement. (Preferred = 0.98 N minimum)
C3	Engaging/ Separating Force	Set 2	Speed = 10 mm/s max. Plug-in card insertion and extraction	Engaging and separating forces	IEC 60512-5. Test 9a	Specified in Section 7.2.6.2, Section 7.3.7.2, Section 7.4.5.2 and Section 7.5.4.2
C4	Insulation tests	Set 2	See Section 7.2.4.5, Section 7.3.5.6, Section 7.4.4.5 and Section 7.5.3.5 Mated Condition	insulation resistance	IEC 60512-3-1	Specified in Section 7.2.4.5, Section 7.3.5.6, Section 7.4.4.5 and Section 7.5.3.5
C5	Voltage stress tests	Set 2	See Section 7.2.4.2, Section 7.3.5.4, Section 7.4.4.2 and Section 7.5.3.2 Mated Condition	Voltage-proof	IEC 60512-4-1	Specified in Section 7.2.4.2, Section 7.3.5.4, Section 7.4.4.2 and Section 7.5.3.2. (There **shall** be no breakdown or flashover)
C6	Contact Resistance	Set 1	Max. voltage = 20 mV in open circuit Max. current = 100 mA	Contact resistance	IEC 60512-2-1	Specified in Section 7.2.4.4, Section 7.3.5.1, Section 7.4.4.4 (Power Input Connector = No initial requirement)
C7	Mechanical operation	Set 1 Set 2 Set 4	Speed = 10 mm/s max. Rest 5 s (unmated) Initial 100 operations	Pre-wear	IEC 60512-5. Test 9a	
		Set 1	Max. voltage = 20 mV in open circuit Max. current = 100 mA	Contact resistance	IEC 60512-2-1	Change in relation to initial values, Specified in Section 7.2.4.4, Section 7.3.5.1, Section 7.4.4.4 and Section 7.5.3.4
C8	Dust	Set 1 Set 4	Unmated and mounted Connectors + Module PCB's Benign dust concentration of 300 g/m3 of chamber volume, flow rate = 300 m/s and an exposure time of 1 h. According to GR-1217-CORE, Sections 9.1.1.1 and 9.1.1.2	Dust exposure	EIA-364-91	
		Set 1	Max. voltage = 20 mV in open circuit Max. current = 100 mA	Contact resistance	IEC 6512-2-1	Change in relation to initial values, Specified in Section 7.2.4.4, Section 7.3.5.1, Section 7.4.4.4 and Section 7.5.3.4

Property of CERN - For Internal Use Only – External Distribution Prohibited

Table 7-44 Group C - Thermal shock and moisture testing sequence (continued)

Test phase	Title	Specimen	Severity or condition of test	Measurement to be performed	Referenced Standard	Requirements
C9	Thermal shock	Set 1 Set 2 Set 4	Five cycles of alternating high and low temperature. 30 minutes dwell at each extreme, with a max. transfer time of 5 s between extremes Central office environment application: -55 °C to 85°C According to GR-1217-CORE, Section 6.3.3, R6-57 Uncontrolled environment application: -65 °C to 105°C According to GR-1217-CORE, Section 6.3.3, R6-58	Monitored thermal shock	EIA-364-32	There **shall** be no contact disturbance longer than 1 µs
		Set 1	Max. voltage = 20 mV in open circuit Max. current = 100 mA	Contact resistance	IEC 60512-2-1	Change in relation to initial values, Specified in Section 7.2.4.4, Section 7.3.5.1, Section 7.4.4.4 and Section 7.5.3.4
C10	Damp heat, cyclic	Set 1 Set 2 Set 4	Mated Connectors Central office environment application: Thermal cycling between 25 °C and 65 °C with 80% to 98% relative humidity 50 cycles, duration 500 h According to GR-1217-CORE, Section 6.3.4, R6-64 Uncontrolled environment application: Thermal cycling between 5 °C and 85 °C with 80% to 98% relative humidity 50 cycles, duration 500 h According to GR-1217-CORE, Section 6.3.4, R6-65	Temperature/ Humidity cycling	EIA-364-31	
		Set 1	Max. voltage = 20 mV in open circuit Max. current = 100 mA	Contact resistance	IEC 60512-2-1	Change in relation to initial values, Specified in Section 7.2.4.4, Section 7.3.5.1, Section 7.4.4.4 and Section 7.5.3.4
C11	Engaging/ Separating Force	Set 2	Speed = 10 mm/s max. Plug-in card insertion and extraction	Engaging and separating forces	IEC 60512-5. Test 9a	Specified in Section 7.2.6.2, Section 7.3.7.2, Section 7.4.5.2 and Section 7.5.4.2

Property of CERN - For Internal Use Only – External Distribution Prohibited

Table 7-44 Group C - Thermal shock and moisture testing sequence (continued)

Test phase	Title	Specimen	Severity or condition of test	Measurement to be performed	Referenced Standard	Requirements
C12	Insulation tests	Set 2	See Section 7.2.4.5, Section 7.3.5.6, Section 7.4.4.5 and Section 7.5.3.5 Mated Condition	Insulation resistance	IEC 60512-3-1	Specified in Section 7.2.4.5, Section 7.3.5.6, Section 7.4.4.5 and Section 7.5.3.5
C13	Voltage stress tests	Set 2	See Section 7.2.4.2, Section 7.3.5.4, Section 7.4.4.2 and Section 7.5.3.2 Mated Condition	Voltage-proof	IEC 60512-4-1	Specified in Section 7.2.4.2, Section 7.3.5.4, Section 7.4.4.2 and Section 7.5.3.2. (There **shall** be no breakdown or flashover)
C14	Contact normal force	Set 1		Contact force	EIA-364-04	This is for design verification purpose and no requirement. (Preferred = 0.98 N minimum)
C15	General examination	Set 1 Set 2 Set 4	Unmated and unmounted Connectors	Visual examination	IEC 60512-1-1	There **shall** be no defect that would impair normal operation.

Property of CERN - For Internal Use Only – External Distribution Prohibited

7.7.2.4 Group D - High temperature and electrical load

Table 7-45 Group D - High temperature and electrical load testing sequence

Test phase	Title	Specimen	Severity or condition of test	Measurement to be performed	Referenced Standard	Requirements
D1	General examina-tion	Set 1, 2	Unmated and unmounted Connectors	Visual examination	IEC 60512-1-1	There **shall** be no defect that would impair normal operation.
D2	Contact normal force	Set 1		Contact force	EIA-364-04	This is for design verification purpose and no requirement. (Preferred = 0.98 N minimum)
D3	Engaging/ Separating Force	Set 2	Speed = 10 mm/s max. Plug-in card insertion and extraction	Engaging and separating forces	IEC 60512-5. Test 9a	Specified in Section 7.2.6.2, Section 7.3.7.2, Section 7.4.5.2 and Section 7.5.4.2
D4	Insulation tests	Set 2	See Section 7.2.4.5, Section 7.3.5.6, Section 7.4.4.5 and Section 7.5.3.5 Mated Condition	insulation resistance	IEC 60512-3-1	Specified in Section 7.2.4.5, Section 7.3.5.6, Section 7.4.4.5 and Section 7.5.3.5
D5	Voltage stress tests	Set 2	See Section 7.2.4.2, Section 7.3.5.4, Section 7.4.4.2 and Section 7.5.3.2 Mated Condition	Voltage-proof	IEC 60512-4-1	Specified in Section 7.2.4.2, Section 7.3.5.4, Section 7.4.4.2 and Section 7.5.3.2. (There **shall** be no breakdown or flashover)
D6	Contact Resistance	Set 1	Max. voltage = 20 mV in open circuit Max. current = 100 mA	Contact resistance	IEC 60512-2-1	Change in relation to initial values, Specified in Section 7.2.4.4, Section 7.3.5.1, Section 7.4.4.4 and Section 7.5.3.4
D7	High Temper-ature Life	Set 1, 2	Mated Connectors Ambient temperature 105 °C No electrical load Duration 1000 h Recovery time 2 h According to GR-1217-CORE, Sections 6.3.2 R6-51	Temperature Life	EIA-364-17	Even the central office environment application, Connectors in MicroTCA **shall** be tested at this temperature condition
		Set 1	Max voltage = 20 mV in open circuit Max current = 100 mA	Contact resistance	IEC 60512-2-1	Change in relation to initial values, Specified in Section 7.2.4.4, Section 7.3.5.1, Section 7.4.4.4 and Section 7.5.3.4
D8	Static Load Retention	Set 2	See Section 7.3.7.5, Section 7.4.5.5 and Section 7.5.4.5	Visual examination	IEC 60512-1-1	There **shall** be no damage that would impair normal operation.
D9	Engaging/ Separating Force	Set 2	Speed = 10 mm/s max. Plug-in card insertion and extraction	Engaging and separating forces	IEC 60512-5. Test 9a	Specified in Section 7.2.6.2, Section 7.3.7.2, Section 7.4.5.2 and Section 7.5.4.2

Property of CERN - For Internal Use Only – External Distribution Prohibited

Table 7-45 Group D - High temperature and electrical load testing sequence (continued)

Test phase	Title	Specimen	Severity or condition of test	Measurement to be performed	Referenced Standard	Requirements
D10	Insulation tests	Set 2	See Section 7.2.4.5, Section 7.3.5.6, Section 7.4.4.5 and Section 7.5.3.5 Mated Condition	insulation resistance	IEC 60512-3-1	Specified in Section 7.2.4.5, Section 7.3.5.6, Section 7.4.4.5 and Section 7.5.3.5
D11	Voltage stress tests	Set 2	See Section 7.2.4.2, Section 7.3.5.4, Section 7.4.4.2 and Section 7.5.3.2 Mated Condition	Voltage-proof	IEC 60512-4-1	Specified in Section 7.2.4.2, Section 7.3.5.4, Section 7.4.4.2 and Section 7.5.3.2. (There **shall** be no breakdown or flashover)
D12	Contact normal force	Set 1		Contact force	EIA-364-04	This is for design verification purpose and no requirement. (Preferred = 0.98 N minimum)
D13	General examina-tion	Set 1, 2	Unmated and unmounted Connectors	Visual examination	IEC 60512-1-1	There **shall** be no damage that would impair normal operation.

7.7.2.5 Group E - Electrical load and temperature

Table 7-46 Group E - High temperature and electrical load testing sequence

Test phase	Title	Specimen	Severity or condition of test	Measurement to be performed	Referenced Standard	Requirements
E1	General examina-tion	Set 3	Unmated and unmounted Connectors	Visual examination	IEC 60512-1-1	There **shall** be no defect that would impair normal operation.
E2	Electrical load and temperature	Set 3	See Section 7.2.4.3, Section 7.3.5.5, Section 7.4.4.3 and Section 7.5.3.3	Current carrying capacity	IEC 60512-5-2	Temperature rise: Specified in Section 7.2.4.3, Section 7.3.5.5, Section 7.4.4.3 and Section 7.5.3.3 (Less than 30 °C)
E3	General examina-tion	Set 3	Unmated and unmounted Connectors	Visual examination	IEC 60512-1-1	There **shall** be no damage that would impair normal operation.

Property of CERN - For Internal Use Only – External Distribution Prohibited

7.7.2.6 Group F - Signal integrity validation

Table 7-47 Group F - High-speed performance testing sequence

Test phase	Title	Specimen	Severity or condition of test	Measurement to be performed	Referenced Standard	Requirements
F1	Mechanical operation	Set 5	Speed = 10 mm/s max. Rest 5 s (unmated) 100 operations		IEC 60512-5. Test 9a	
F2	Damp heat, steady state	Set 5	No electrical load Polarizing voltage 60 V d.c. 40 °C, 93% relative humidity, 10 days		EIA-364-31	
F3	Transmission line reflections in the time domain	Set 5	Input step rise time 25 ps (20 - 80%) max. See Section 7.2.5.1 and Section 7.3.6.1	Differential impedance	IEC 60512-23-4	Specified in Section 7.2.5.1 and Section 7.3.6.1 (Peak values 100 Ohms ±10 Ohms)
F4	Cross-talk	Set 5	Input step rise time 25 ps (20 - 80%) max. See Section 7.2.5.4 and Section 7.3.6.4	Cross-talk ratio	IEC 60512-5-1	Specified in Section 7.2.5.4 and Section 7.3.6.4:
F5	Attenuation	Set 5	See Section 7.2.5.3 and Section 7.3.6.3	Attenuation	IEC 60512-25-2	Specified in Section 7.2.5.3 and Section 7.3.6.3
F6	Return loss	Set 5	See Section 7.2.5.2 and Section 7.3.6.2	Return loss	IEC 60512-25-5	Specified in Section 7.2.5.2 and Section 7.3.6.2

Property of CERN - For Internal Use Only – External Distribution Prohibited

7.8 References

¶ 42 The following table lists applicable specifications and standards related to the Connectors of MicroTCA. For further regulatory and compliance details, please refer to Section 8.

Table 7-48 Connector references

Specification or Standards Body	Specification or Standard #	Description	Note
Telecodia	GR-1217-CORE	Generic requirements for separable electrical connectors used in telecommunications hardware	
IEC	60664-1	Insulation coordination for equipment within low-voltage systems	Section: 3.2, 4.2
	60512-4-1	Voltage stress tests -Voltage Proof	
	60512-5-2	Current carrying capacity tests -Current temperature derating	
	60512-2-1	Electrical continuity and contact resistance tests -Contact resistance millivolt level method	
	60512-3-1	Insulation tests -Insulation resistance	
	60512-23-4	Screening and filtering tests -Transmission line reflections in the time domain	
	60512-25-5	Tests and measurements -Return loss	
	60512-25-2	Tests and measurements -Attenuation (insertion loss)	
	60512-25-1	Tests and measurements -Crosstalk	
	60512-5	Endurance tests -Mechanical Operation	Section: Test 9a
	60512-13-1	Basic testing and measurements -Engaging and separating forces	
	60512-8	Mechanical tests on contacts and terminations -Gauge retention force	Section: Test 16e
	60512-6-4	Dynamic stress tests -Vibration	
	60512-6-3	Dynamic stress tests -Shock	

Property of CERN - For Internal Use Only – External Distribution Prohibited

Table 7-48 Connector references (continued)

Specification or Standards Body	Specification or Standard #	Description	Note
IEC	60512-1-1	General examination -Visual examination	
	60950-1	Safety -General requirements	Section 2.1.1.1: Access to energized parts
	60664-1	Insulation coordination for equipment within low-voltage systems	Section 2.5.1: Degrees of pollution in the micro-environment
EIA	364-31	Humidity test procedure for electrical connectors	
	364-32	Thermal shock test procedure for electrical connectors	
	364-91	Dust test for electrical connectors and sockets	
	364-65	Mixed flowing gas	
	364-04	Normal force test procedure for electrical connectors	
	364-17	Temperature life with or without electrical load test procedure for electrical connectors and sockets	
RoHS	2002/95/EC	Restriction of the use of certain Hazardous Substances in electrical and electric equipment	

Property of CERN - For Internal Use Only – External Distribution Prohibited

Regulatory requirements and industry standard guidelines 8

¶ 1 This section defines the regulatory requirements and industry standards for Telecommunication/Information Technology Equipment. Section 8.1 details the regulatory requirements set forth by various government regulatory agencies. Section 8.2 details industry standards that are highly recommended for equipment to meet the requirements of central office environments and telecommunication markets. Section 8.2.2 describes the requirements for attended and unattended environmentally controlled offices, and it provides a list of requirements for harsh uncontrolled environments, such as outside plant, pole-mount, etc. (See the tables throughout this document for specific regulatory and industry standard references.)

¶ 2 It is highly recommended that the equipment meet the performance requirements set forth in these standards, based on the targeted market for the equipment. It is recommended that MicroTCA equipment meet regulatory requirements and industry standard requirements to enhance compatibility and to ease system integration. In the context of this section, the term Equipment refers to a complete functional product. This includes any cooling systems, power supplies, filters, Shelf hardware, and representative circuit pack fills required for system operation. Individual Field Replaceable Units (FRUs) are not considered to be the equipment.

8.1 Regulatory

Requirements

REQ 8.1 All equipment **shall** meet the most recently adopted versions of the following regulatory compliance requirements. In general, these requirements are harmonized standards with similar requirements applied worldwide; however, countries or regions do declare deviations to these standards to account for conditions not included in the base standard.

REQ 8.2 Evaluations **should** be completed for each market where the product will be deployed. As examples, the requirements for Europe and North America are listed. A regulatory compliance specialist **should** determine the appropriate requirements for the regions where the product will be marketed.

8.1.1 Safety

¶ 3 The requirements for safety are intended to provide a level of protection for personnel and property with regard to Information Technology Equipment (ITE) products. These standards account for normal and abnormal conditions, such as general operating environment pollution, over voltages, likely fault conditions, etc. The standards intend to reduce the likelihood of injury in various categories, including—but not limited to: electric shock, energy, fire, heat, mechanical, chemical, and radiation hazards. These requirements are all based on the international standard IEC60950-1.

Property of CERN - For Internal Use Only – External Distribution Prohibited

Requirements

REQ 8.3 Laser products **shall** meet IEC/EN 60825-1 and -2. (For USA FDA/CDRH21 CFR 1040.10 and 1040.11.

REQ 8.4 All products **shall** meet IEC 60950-1.

Note: There are national standards and individual country deviations to the international standard. A Certification Body (CB) report, based on IEC 60950-1, provided by a National Certification Body, is recommended to ease the acceptance of the product in other countries. There are 42 countries worldwide that officially accept CB reports.

8.1.2 Electromagnetic compatibility

¶ 4 Electromagnetic Compatibility (EMC) standards testing is required to reduce emissions that might interfere with and affect the operation of other electronic equipment. These standards also ensure that ITE products have a minimum level of immunity to electromagnetic interference that would degrade the functionality or performance of the equipment. Outside electrical influences include factors such as Electrical Discharges (ESD), RF energy from other nearby equipment, and supply voltage fluctuations. There are different classifications for the product, depending upon its intended use and location.

Requirement

REQ 8.5 All MicroTCA equipment **shall** meet Class A limits and **should** meet Class B limits of the following regulatory standards/requirements:

- For ITE equipment in Europe: EN 55022 and EN 55024 (equivalent to CISPR22 and CISPR24 used in most countries)
- For CO equipment in Europe: EN 300 386, Electro-Magnetic Compatibility (EMC) Requirements for Public Telecommunication Network Equipment, Electromagnetic Compatibility (EMC) Requirements (similar to EN 55022 and EN55024 combined).
- For USA: FCC CFR 47 Part 15, Subpart B

8.1.3 Ecology standards

Requirement

REQ 8.6 The environmental impact of electronic components has been a focus area for many countries in the past few years. It is suggested that as part of good design practice, MicroTCA products **should** comply with the applicable ecologic requirements in the regions into which these products will be shipping. Some areas to consider are materials, batteries, energy requirements, packaging, noise emissions, and product take-back.

¶ 5 Individual country and regional laws are also in place, such as the Japanese Law concerning the Rational Use of Energy. Other standards, requirements, and guidelines exist. Consultation with a regulatory environmental compliance specialist is recommended.

Requirement

REQ 8.7 European Environmental standards are being driven by a series of European Union (EU) directives. Products intended for sale to the EU **shall** be designed to meet these

Property of CERN - For Internal Use Only – External Distribution Prohibited

directives. Many other countries and states are adopting similar environmental standards. The following is a list of existing EU directives:

- **(RoHS)** DIRECTIVE 2002/95/EC OF THE EUROPEAN PARLIAMENT AND OF THE COUNCIL of 27 January 2003 on the restriction of the use of certain hazardous substances in electrical and electronic equipment (RoHS)
- (**WEEE**) DIRECTIVE 2002/96/EC OF THE EUROPEAN PARLIAMENT AND OF THE COUNCIL of 27 January 2003 on waste electrical and electronic equipment (WEEE)
- (**EuP**) DIRECTIVE 2005/32/EC OF THE EUROPEAN PARLIAMENT AND OF THE COUNCIL of 6 July 2005 establishing a Framework for the setting of ecodesign requirements for energy-using products and amending Council Directive 92/42/EEC and Directives 96/57/EC and 2000/55/EC of the European Parliament and of the Council

8.2 Telecommunications industry standards requirements

¶ 6 Products intended for use in telecommunications equipment are required to be evaluated to the relevant sections of the current revisions of the standards identified in this section. These standards are intended to demonstrate not only the safety of the design and compliance with regulatory requirements, but also sufficient reliability to ensure operation of critical systems under adverse conditions.

Requirement

REQ 8.8 Equipment intended for application within a telecommunications central office **shall** be evaluated to the relevant sections of the Section 8.2.1.

8.2.1 EMC/safety requirements for the telecommunications industry

Requirements

REQ 8.9 Equipment **shall** meet Section 8.1.1 and Section 8.1.2,

REQ 8.10 Equipment **should** meet the following:

- Telcordia GR-1089-CORE, Electromagnetic Compatibility and Electrical Safety Generic Criteria for Network Telecommunication Equipment
- Telcordia GR-63-CORE NEBS Requirements: Physical Protection

REQ 8.11 Equipment **should** consider the following:

- ES 201 468 Electromagnetic compatibility and Radio spectrum Matters (ERM); Additional ElectroMagnetic Compatibility (EMC) requirements and resistibility requirements for telecommunications equipment for enhanced availability of service in specific applications

Property of CERN - For Internal Use Only – External Distribution Prohibited

8.2.2 Environmental requirements for the telecommunications industry

¶ 7 Environmental requirements specified in the NEBS and ETSI standards provide a level of operability by testing for conditions such as heat and temperature, fire, earthquakes, acoustics, and lightning, in addition to electrical safety and EMC (previously listed). The environmental requirements are given in the following:

- Telcordia GR-63-CORE, Network Equipment Building System (NEBS) Requirements - Physical Protection (USA)
- ETS 300 019 Environmental Conditions and Environmental Tests for Telecommunication Equipment (Europe)

8.2.2.1 NEBS–USA (controlled environment)

¶ 8 NEBS (Telcordia FR-2063 Network Equipment Building Systems) is primarily a U.S. specification, but it is also consulted in other regions, such as Canada and Japan. NEBS is also recognized by municipalities and regulatory agencies as a factor to determine if the product will provide safe and reliable operation.

Requirements

REQ 8.12 Equipment intended for application within telecommunications central offices in the United States **should** comply with the NEBS Level 3 criteria. The test requirements are specified in the following:

- Telcordia GR-63, Network Equipment-Building System (NEBS) Requirements—Physical Protection
- Telcordia GR-1089, Electromagnetic Compatibility And Electrical Safety Generic Criteria For Network Telecommunication Equipment
- Telcordia SR-3580, NEBS Criteria Levels
- Telcordia GR-78, Generic Requirements for the Physical Design and Manufacture of Telecom Products & Equipment

Note: Contaminants testing to indoor levels may be accepted by most end-users. Seek confirmation with specific end-users.

REQ 8.13 The following are additional Telcordia requirements that **should** be considered:

- GR-474, Alarm and Control for Network Elements
- GR-2914, Human Factors Requirements for Equipment to Improve Network Integrity
- GR-3028, Thermal Management In Telecommunications Central Offices
- GR-1217, Generic Requirements for Separable Electrical Connectors Used in Telecommunications Hardware
- ANSI T1.315, Voltage Levels for DC Powered Equipment Used in the Telecommunications Environment
- ITU-T K.27, Bonding Configurations and Earthing Inside a Telecommunications Building

Property of CERN - For Internal Use Only – External Distribution Prohibited

REQ 8.14 Equipment with shielded interfaces intended for installation in Isolated Bonding Networks **shall** provide a means of isolating the shield from the chassis Ground of the equipment.

REQ 8.15 Shelf and Frame assemblies **should** provide a means for attaching the building system reference Ground/earth bonding conductor to the equipment chassis. The preferred attachment method is to accommodate a dual-hole pressure wire Connector. The dual-hole pressure wire Connector should be capable of fitting a #6 AWG (4.877 mm/ISO 5 mm, preferred) copper wire.

8.2.2.2 ETSI–Europe (controlled environment)

¶ 9 ETSI is a recognized European standards organization that also contributes to worldwide standardization for telecommunications and related areas. Their standards, although primarily used for the EU market, are used worldwide.

Requirement

REQ 8.16 Compliance to the following standards **should** be met to a 3.1 class level.

- ETS 300 019, Environmental conditions and environmental tests for telecommunication equipment (Europe)
- ETS 300 753, Acoustic Noise Emitted By Telecommunications Equipment (Europe)
- ETS 300 119, Environmental Conditions and Environmental Tests for Telecommunication Equipment
- ETS 300 253, Equipment Engineering (EE);Earthing and bonding of telecommunication equipment in telecommunication centres
- ETS 300 132-1, Equipment Engineering (EE); Power supply interface at the input to telecommunications equipment; Part 1: Operated by alternating current (ac) derived from direct current (dc) sources
- ETS 300 132-2, Equipment Engineering (EE);Power supply interface at the input to telecommunications equipment; Part 2: Operated by direct current (dc) Power supply interface at the input to telecommunications equipment

8.2.2.3 Outdoor environment standards

¶ 10 Often telecommunication equipment is planned for deployment outdoors. Several standards have been developed to address / define the environmental conditions based on locations and or product type. Examples are outdoor controlled or uncontrolled equipment cabinets, pole mount, towers, vaults etc. The following are standards for consideration.

Property of CERN - For Internal Use Only – External Distribution Prohibited

Requirements

REQ 8.17 Equipment intended for telecommunications for outdoor applications within the United States of America **should** comply with the following standards when applicable:

- GR-487-CORE, Generic Requirements for Electronic Equipment Cabinets
- GR-909-CORE, Generic Criteria for Fiber in the Loop Systems
- GR-950-CORE, Generic Requirements for Optical Network Unit (ONU) Closures
- GR-3108-CORE, Generic Requirements for Network Equipment in the Outside Plant (OSP)
- GR-49-CORE, Generic Requirements for Outdoor Telephone Network Interface Devices (NIDs)
- GR-2890-CORE, Active Network Interface Device (Residential Gateway)

REQ 8.18 For ETSI Outdoor applications, the equipment **should** be designed to meet office class 4.1.

- ETSI 300 019-2-4, Environmental Engineering (EE); Environmental conditions and environmental tests for telecommunications equipment; Part 2-4: Specification of environmental tests; Stationary use at non-weather protected locations Class 4.1

8.2.2.4 Additional customer-specific recommendations

Requirement

REQ 8.19 The following additional specifications from individual Companies and Regional Bell Operating Companies contain company-specific modifications of these requirements. The latest version of each of these specifications **should** be considered in any NEBS test program.

- AT&T/SBC TP-76200 Network Equipment.
  Document name: Network Equipment Power, Grounding, Environmental, And Physical Design Requirements
- AT&T NEDS MLID #9069
- Telecommunications Carrier Group: http://www.verizonnebs.com or https://ebiznet.sbc.com/sbcnebs/Document
  Document name: VZ.NEBS.TE.NPI.2004.015
  Document name: Telecommunications Carrier Group NEBS Compliance Checklist
- Verizon: http:verizonnebs.com
  Document name: VZ.NEBS.RQS. NPI.2004.019 Verizon Communications
- NEBS Compliance Clarification Document
- QWEST document 77351, QWEST Engineering Standard-General Equipment Standards (this can be found at: http://www.qwest.com/techpub/)
- NTT http://www.ntt.co.jp/ontime/index-e.html
- British Telecom http://www.selling2bt.bt.com/working/generic/download.asp

Property of CERN - For Internal Use Only – External Distribution Prohibited

8.3 Reliability/MTBF standards

Requirement

REQ 8.20 Suppliers/venders should characterize their product with MTBF information and supply reliability data for system components. The following are some examples of reliability specifications:

- Telcordia GR-512, LSSGR Reliability Section 12
- GR-929, Reliability and Quality Measurements for Telecommunications Systems
- Telcordia SR-332, Reliability Prediction for Electronic Equipment

¶ 11 Consult a quality and reliability specialist for specific requirements.

8.4 Cross reference list

¶ 12 Table 8-1 provides quick reference to specifications for the USA/Canada, the European Union and international, and to the conditions that are tested in these specifications. This list is not comprehensive, but is meant as an aid to understanding the preceding information in this chapter. Consult a compliance specialist to determine the correct specifications to use for the regions in which the product will be marketed.

Table 8-1 Cross reference list

	Heat and temp.	Fire	Earthquake	Acoustics	Lightning	Electrical safety	Emissions	Immunity	Laser	Shock/ Vibration
USA/ Canada	GR-63 UL60950-1	GR-63 UL60950-1 ANSI T1.319	GR-63 ANSI T1.329	GR-63 NIPP (T1E1) project 42	GR-1089	GR-1089 UL 60950-1	GR-1089 ICES-003 FCC CFR47 Part 15	GR-1089	FDA/CDRH 21 CFR 1040.10, 1040.11	GR-63
European Union	EN300 019 EN60950-1	EN60950-1	EN300 019	ETS300 753	EN55024	EN60950-1	EN55022 EN300 386	EN55024 EN300 386	EN 60825-1	EN300 019
Interna-tional	IEC61587-1	IEC 61587-1	IEC 60068-3-3		CISPR 24	IEC 60950-1	CISPR 22	CISPR 24	IEC 60825-1	IEC 60068-2-57

8.5 FRU test guidelines

¶ 13 The following test and/or analysis recommendations are provided to reduce the risk of noncompliance with given standards, when a Field Replaceable Unit (FRU) is installed into a MicroTCA Shelf.

Property of CERN - For Internal Use Only – External Distribution Prohibited

8.5.1 FRU safety test

Requirements

REQ 8.21 Each FRU **should** be tested to meet IEC 60950-1.

REQ 8.22 Temperature-related tests **should** be performed under worst case temperature conditions, typically natural convection and 55 °C, ambient. Key testing would include dielectric testing, input current tests, laser maximum output levels, a flammability rating assessment to UL 94-V0, and an assessment of safety critical components.

REQ 8.23 Equipment intending to meet GR1089 requirements for Type 1(CO) and Type 3 (CPE) FRU assemblies with copper interfaces **shall** meet the intra-building requirements per section 4.6.9 and 4.6.17, respectively, of Telcordia Generic Requirements GR 1089. Type 2 and Type 4 FRU assemblies with copper interfaces that leave the premises **shall** meet sections 4.6.8 and 4.6.12, respectively.

REQ 8.24 FRU assemblies with faceplate copper interfaces **shall** meet level 2 requirements for AC power fault and lightning safety.

REQ 8.25 FRU assemblies with faceplate copper interfaces **should** meet level 1 requirements for AC power fault and lightning equipment reliability.

8.5.2 FRU EMC testing

¶ 14 Regulatory EMC requirements call for compliance at the system level. EMC compliance at the FRU level is not accepted (except for PC peripherals in some jurisdictions). A fully loaded system (representative worst case) test is required to demonstrate compliance. Recently, the IEEE Standards Development Committee has given the approval to start a new standard to address EMC Requirements and Verification methods for a Field Replaceable Unit (FRU), Replaceable Electronic Module (REM). It is recommended that MicroTCA follow the development of this standard closely and promote its adoption by regulatory bodies. In the interim, full system testing or appropriate EMC engineering is required to demonstrate compliance. The following are recommendations for reducing the risk of system non-compliance, due to the introduction of a new FRU:

- Design the system using an EMC budget that addresses EMC at the FRU level.
- Establish the shielding effectiveness of the MicroTCA Shelf equipment.
- Based on the shielding effectiveness of the Shelf equipment, provide an EMC budget for each type of card in the system. For example, common equipment would be assigned a limit, data processing cards a limit, and I/O interface cards another limit.
- Then, each FRU card is designed and tested to determine its emissions. If the emissions are below the FRU budget, the card EMC has been de-risked for introduction in the system.

¶ 15 Table 8-2 gives the relevance of various EMC test cases, based on the type of FRU:

Property of CERN - For Internal Use Only – External Distribution Prohibited

Table 8-2 Recommended EMC test cases based on FRU type

EMC	Test Cases		Backplane	AC/DC Power Unit or Unit containing PUPS	Unit Containing Copper I/O	Unit With No Copper I/O	Fan Unit	Unit Containing User Interface (i.e. switch)
Emissions Specifications	Radiated Emissions	Electric Field	Shall	Should	Shall	Shall	Shall	Shall
		Magnetic Field	Should	Should	Should	Should	Should	Should
	Conducted Emissions	Signal Leads	N/A	N/A	Shall	N/A	N/A	N/A
		Power Leads	N/A	Shall	N/A	N/A	N/A	N/A
	AC Leads Current Harmonics[a]		N/A	Shall	N/A	N/A	N/A	N/A
	AC Leads Voltage Fluctuations[a]		N/A	Shall	N/A	N/A	N/A	N/A
Immunity Specifications	Radiated Immunity	Electric Field	Should	Should	Should	Should	Should	Should
		Magnetic Field[b]	N/A	N/A	N/A	N/A	N/A	N/A
	Conducted Immunity	Signal Leads	N/A	N/A	Shall	N/A	N/A	N/A
		Power Leads	N/A	Shall	Should	Should	N/A	N/A
	ESD	ESD	N/A	Should	Shall	Should	Should	Shall
	EFT	Power Leads	N/A	Shall	Should	Should	N/A	N/A
		Signal leads	N/A	N/A	Shall	N/A	N/A	N/A
	Surges	Power Leads	N/A	Shall	N/A	N/A	N/A	N/A
		Signal Leads	N/A	N/A	Shall	N/A	N/A	N/A
	DIPs	AC Power Dips and interruptions[a]	N/A	N/A	N/A	N/A	N/A	N/A

a. Europe Only
b. H-Field Sensitive devices only

8.5.3 FRU environmental testing

Requirement

REQ 8.26 Environmental testing at the FRU level **should** include thermal humidity testing to GR 63 and ETSI 300 019, based on the Shelf minimum airflow rate.

REQ 8.27 Vibration and Earthquake testing **should** be performed on a test shelf with the FRU under test to GR 63, ETSI 300 019 and or ANSI T1.329.

¶ 16 At the FRU level, it is recommended to determine the fuel load and provide a fuel load report. It may be possible to use this data, if it is similar to existing FRUs with equivalent fuel loads, to avoid additional fire testing. This would require a compliance-by-similarity report to be signed and accepted by the end customer.

Property of CERN - For Internal Use Only – External Distribution Prohibited

Property of CERN - For Internal Use Only – External Distribution Prohibited

Module mis-insertion considerations A

¶ 1 This appendix discusses some considerations to be taken into account when designing MCH Modules or when designing AdvancedMC Modules with AMC.0 electrically compatible Auxiliary Connectors. The discussion covers scenarios of mis-insertion of MCH and AdvancedMC Modules in a Slot of the opposite kind or across Slot boundaries. The intent is to provide backGround information to help design MCH and AdvancedMC Modules that do not cause any mechanical or electrical stress or damage.

¶ 2 The MCH Module uses the same form factor as an AdvancedMC Module. Furthermore, the MCH Module may use tongues 2, 3, and 4, which are part of the particular case of Auxiliary Connectors that are mechanically and electrically compatible with the AdvancedMC Module Backplane interface. See Section 2.13.5, “AMC.0 electrically compatible keying block”.

¶ 3 One could, therefore, insert an MCH Module into an AdvancedMC Slot or an AdvancedMC Module into an MCH Slot. There is no provision for a mechanical feature to prevent such mis-insertion of Modules.

¶ 4 It is, therefore, required that an AdvancedMC inserted into an MCH Slot does not cause any mechanical or electrical stress or damage, or any service interruption.

¶ 5 Similarly, it is also required that an MCH Module inserted into an AdvancedMC Slot does not cause any mechanical or electrical stress or damage, or any service interruption.

¶ 6 Furthermore, it is highly desirable that such mis-insertion be detectable from a system management standpoint.

¶ 7 Some applications may actually benefit from a MCH Module capable of operating in a degraded mode while inserted in AdvancedMC Slots. This could be the case if the MCH Module was hosting a powerful CPU subsystem, in addition to the MCMC and the Gigabit Ethernet base fabric. Such a dual AdvancedMC/MCH mode Module could be used in an AdvancedMC Slot as a generic processing AdvancedMC and as a powerful combined VC/Shelf/System/Application manager while in an MCH Slot. Therefore, this configuration is not really a mis-insertion.

¶ 8 Some applications may actually benefit from being able to operate an AdvancedMC Module in one of the two MCH Slots of a redundant system, thus providing support for an additional AdvancedMC, bringing the total maximum number of AdvancedMC supported per MicroTCA Carrier to thirteen, instead of twelve. Such a redundant system would then be operating in a non-redundant mode, since only one MCH would be installed and the other MCH Slot is occupied by an AdvancedMC. Therefore, this configuration is not really a mis-insertion.

Property of CERN - For Internal Use Only – External Distribution Prohibited

¶ 9 Implications of the mis-insertion of MCHs and AdvancedMCs can be categorized as:

- Hardware-specific, related to signal levels, shorts, pinout
- Power management-specific, related to the requirement to autonomously apply Payload Power to an MCH, but not to an AdvancedMC
- System Management-specific, related to detection and inter-operation of an MCH or an AdvancedMC outside an MCH or an AdvancedMC Slot, respectively

¶ 10 The importance of a given mis-insertion configuration is highlighted throughout this section with a set of icons as listed in Table A-1.

Table A-1 Convention in highlighting the importance of mis-insertions

Icon	Meaning
✓	The configuration is actually not a mis-insertion, but a valid one.
⚠	The configuration is a mis-insertion as the module may not be meant for that slot and may therefore not operate correctly. Some implementations that are not mandated by this specification may take advantage of such configuration and support correct operation if designed accordingly.
STOP	The configuration is a mis-insertion that could potentially impact the operation of the rest of the system and must be avoided.

A.1 MCH Module mis-insertion combinations

¶ 11 The following cases have to be considered as shown in Figure A-1:

- A Full-Height MCH Module, with up to four tongues, plugged into a Full-Height MCH Slot, with up to four Connectors (a) This is a valid case.
- A Full-Height MCH Module, with up to four tongues, plugged into a Full-Height AdvancedMC Slot, with its standard AMC.0 Connector (Con 1) and up to three Auxiliary Connectors (Con 2, Con 3, Con 4) (b). This may be a mis-insertion if the MCH is not designed to be able to operate as an AdvancedMC in a degraded mode.
- A Half-Height MCH Module, with up to two tongues, plugged into the right side of a Full-Height MCH Slot (c). This is a valid case.
- A Half-Height MCH Module, with up to two tongues, plugged into the left side of a Full-Height MCH Slot (d). Note that tongues 1 and 2 mate with Connectors 3 and 4 in the Slot. This is typically not a desirable configuration. An easy way to prevent it is to avoid instantiating guide rails aligned with Connector 3 in this Slot.
- A Half-Height MCH Module, with up to two tongues, plugged into the right side of a Full-Height AdvancedMC Slot (e). This may be a mis-insertion if the MCH is not designed to be able to operate as an AdvancedMC in a degraded mode.
- A Half-Height MCH Module, with up to two tongues, plugged into the left side of a Full-Height AdvancedMC Slot (f). Note that tongues 1 and 2 mate with Connectors 3 and 4 in the Slot. This is typically not a desirable configuration. An easy way to prevent it is to avoid instantiating guide rails aligned with Connector 3 in this Slot.

Property of CERN - For Internal Use Only – External Distribution Prohibited

Figure A-1 MCH Module combinations

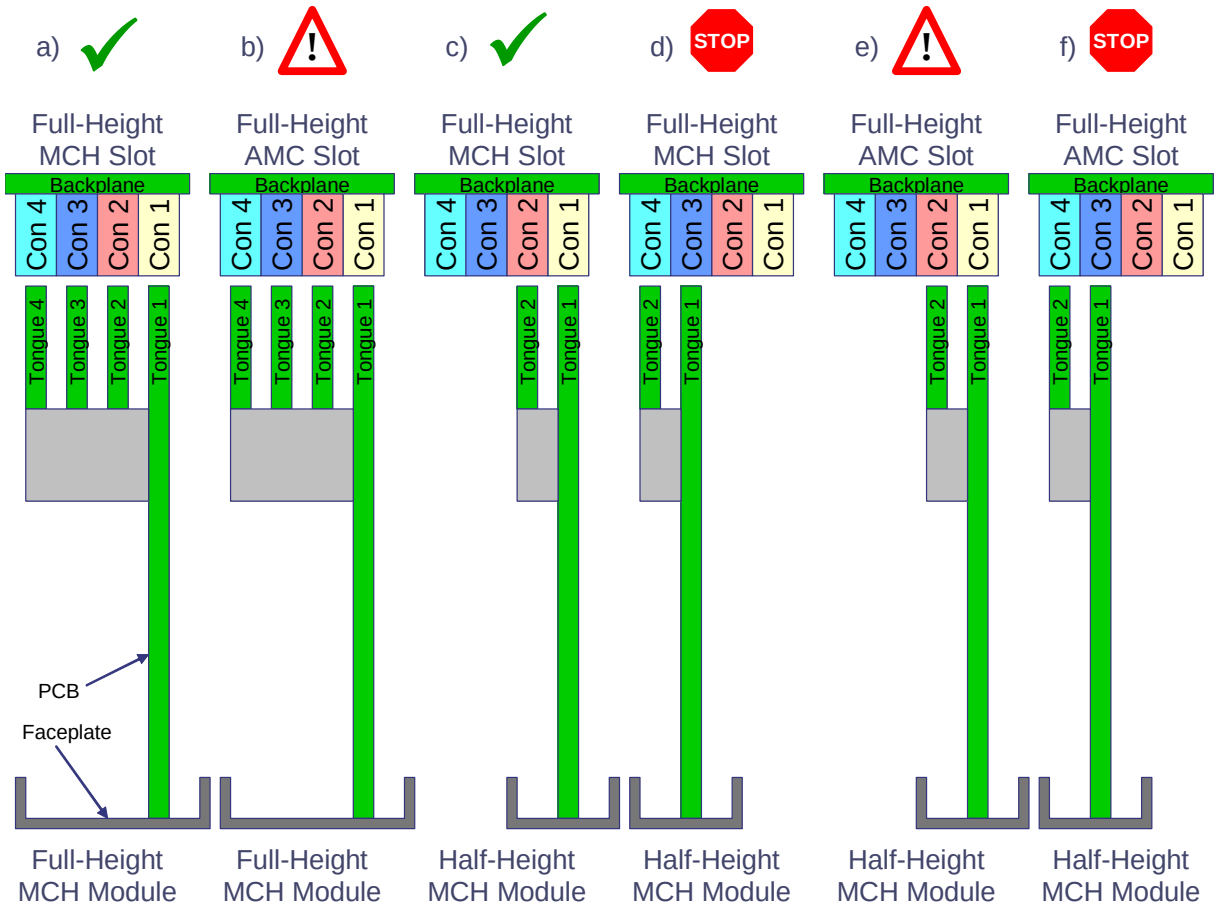

Property of CERN - For Internal Use Only – External Distribution Prohibited

¶ 12 We also need to consider cases where a Full-Height Module is inserted in a Half-Height Slot and thus crosses the Slot pitch line as shown in Figure A-2:

- A Full-Height MCH Module, with up to four tongues, plugged across a Full-Height MCH and a Half-Height MCH Slots (g). This is a typical mis-insertion case.
- A Full-Height MCH Module, with up to four tongues, plugged across two Half-Height AdvancedMC Slots (h). This is a typical mis-insertion case.
- A Full-Height MCH Module, with up to four tongues, plugged across a Full-Height AdvancedMC Slot that uses Zone 2 Connectors and a Half-Height AdvancedMC Slot (i). This is a typical mis-insertion case.

Figure A-2 MCH Module cross–pitch line combinations

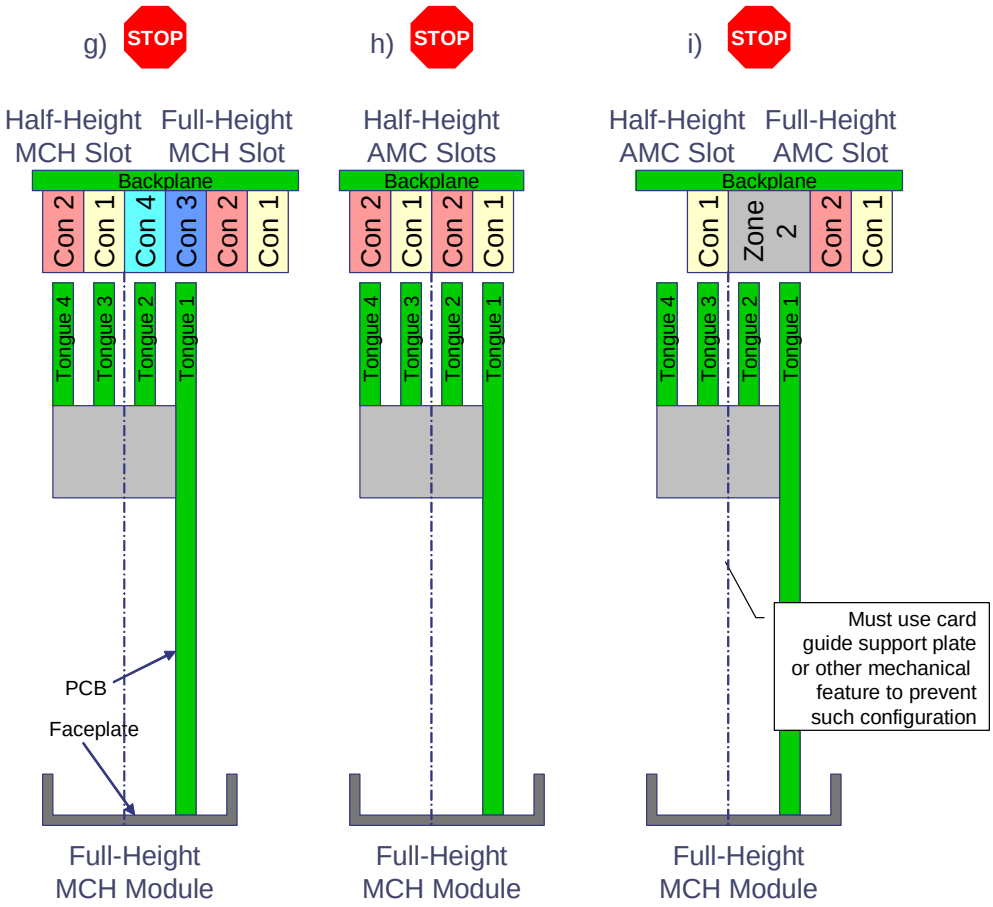

Note: Cases d), f), g) and i) can be prevented by not instantiating any guide rails aligned with Connectors 3. Only cases h) and i) can be prevented by using a guide support plate between each Slot, which would prevent such a Full-Height MCH from sliding into its Slot. Case i) has to be prevented this way, while other cases are tolerable from a mechanical and electrical standpoint, as elaborated upon later in this section.

Property of CERN - For Internal Use Only – External Distribution Prohibited

A.2 AdvancedMC Module mis-insertion combinations

¶ 13 The following cases have to be considered as shown in Figure A-3:

- A Full-Height AdvancedMC Module, with up to four tongues (three auxiliary tongues), plugged into a Full-Height MCH Slot, with up to four Connectors (a). This may be a mis-insertion if the AdvancedMC is not designed to be able to operate as a standard AdvancedMC in a degraded mode which does not use tongues 2, 3 and 4. Also, this may be a mis-insertion case of the other MCH of a redundant system is not capable of supporting such a thirteenth AdvancedMC in the MCH Slot.
- A Full-Height AdvancedMC Module, with up to four tongues (three auxiliary tongues), plugged into a Full-Height AdvancedMC Slot, with its standard AMC.0 Connector (Con 1) and up to three Auxiliary Connectors (Con 2, Con 3, Con 4) (b). This is a valid case.
- A Half-Height AdvancedMC Module, with up to two tongues (one auxiliary tongue), plugged into the right side of a Full-Height MCH Slot (c). This may be a mis-insertion if the AdvancedMC is not designed to be able to operate as a standard AdvancedMC in a degraded mode which does not use tongue 2. Also, this may be a mis-insertion case of the other MCH of a redundant system is not capable of supporting such a thirteenth AdvancedMC in the MCH Slot.
- A Half-Height AdvancedMC Module, with up to two tongues (one auxiliary tongue), plugged into the left side of a Full-Height MCH Slot (d). Note that tongues 1 and 2 mate with Connectors 3 and 4 in the Slot. This is typically not a desirable configuration. An easy way to prevent it is to avoid instantiating guide rails aligned with Connector 3 in this Slot.
- A Half-Height AdvancedMC Module, with up to two tongues (one auxiliary tongue), plugged into the right side of a Full-Height AdvancedMC Slot (e). This is a valid case.
- A Half-Height AdvancedMC Module, with up to two tongues (one auxiliary tongue), plugged into the left side of a Full-Height AdvancedMC Slot (f). Note that tongues 1 and 2 mate with Connectors 3 and 4 in the Slot. This is typically not a desirable configuration. An easy way to prevent it is to avoid instantiating guide rails aligned with Connector 3 in this Slot.

Property of CERN - For Internal Use Only – External Distribution Prohibited

Figure A-3 AdvancedMC Module combinations

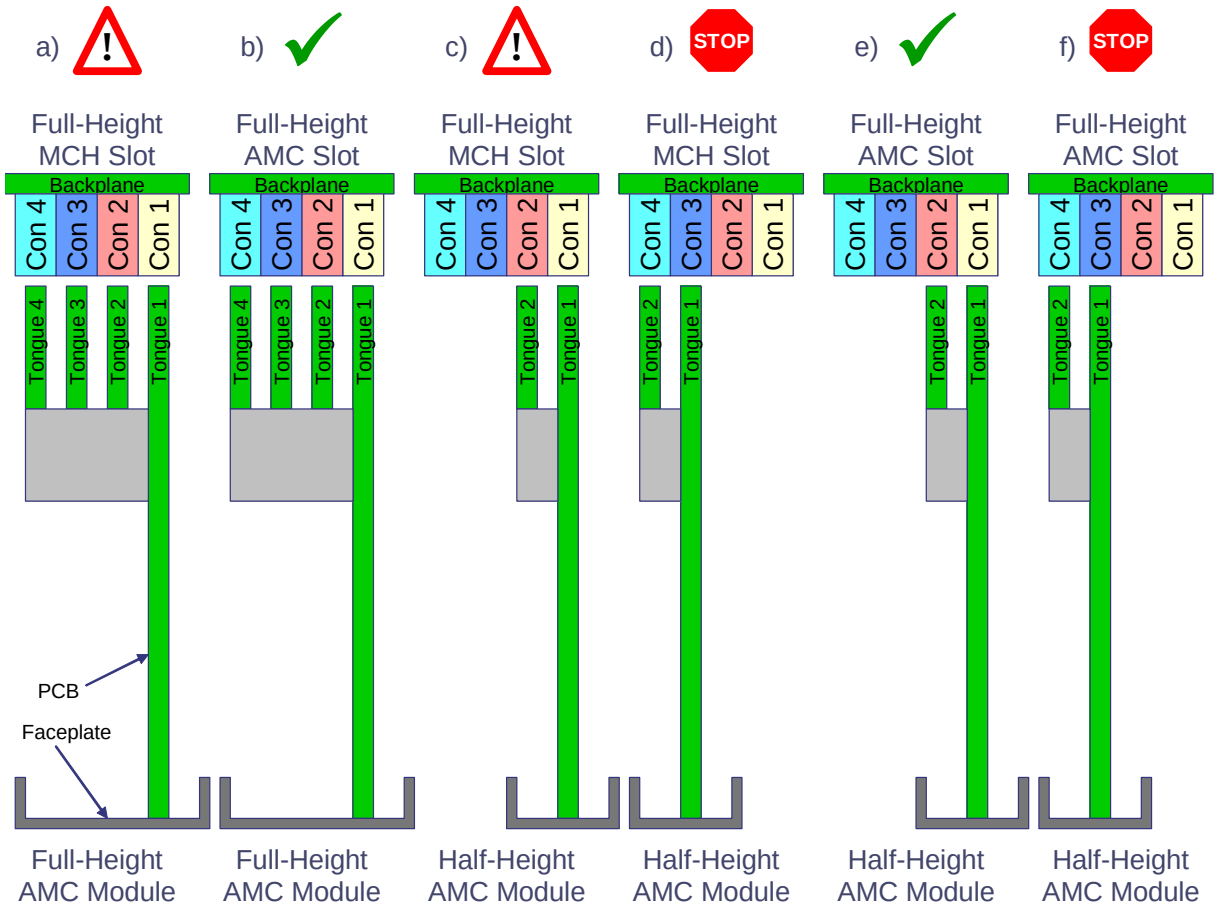

Property of CERN - For Internal Use Only – External Distribution Prohibited

¶ 14 We also need to consider cases where a Full-Height Module is inserted in a Half-Height Slot and thus crosses the pitch line as shown in Figure A-4:

- A Full-Height AdvancedMC Module, with up to four tongues, plugged across a Full-Height MCH and a Half-Height MCH Slots (g). This is a typical mis-insertion case.
- A Full-Height AdvancedMC Module, with up to four tongues, plugged across two Half-Height AdvancedMC Slots (h). This is a mis-insertion case unless the AdvancedMC is designed to support such configuration and can be identified as two Half-Height AdvancedMCs from the system management perspective. This is not recommended, but could potentially be used to bring more power to a single AdvancedMC Module (2x max. current available from a single Slot).
- A Full-Height AdvancedMC Module, with up to four tongues, plugged across a Full-Height AdvancedMC Slot that uses Zone 2 Connectors and a Half-Height AdvancedMC Slot (i). This is a typical mis-insertion case.

Figure A-4 AdvancedMC Module cross–pitch line combinations

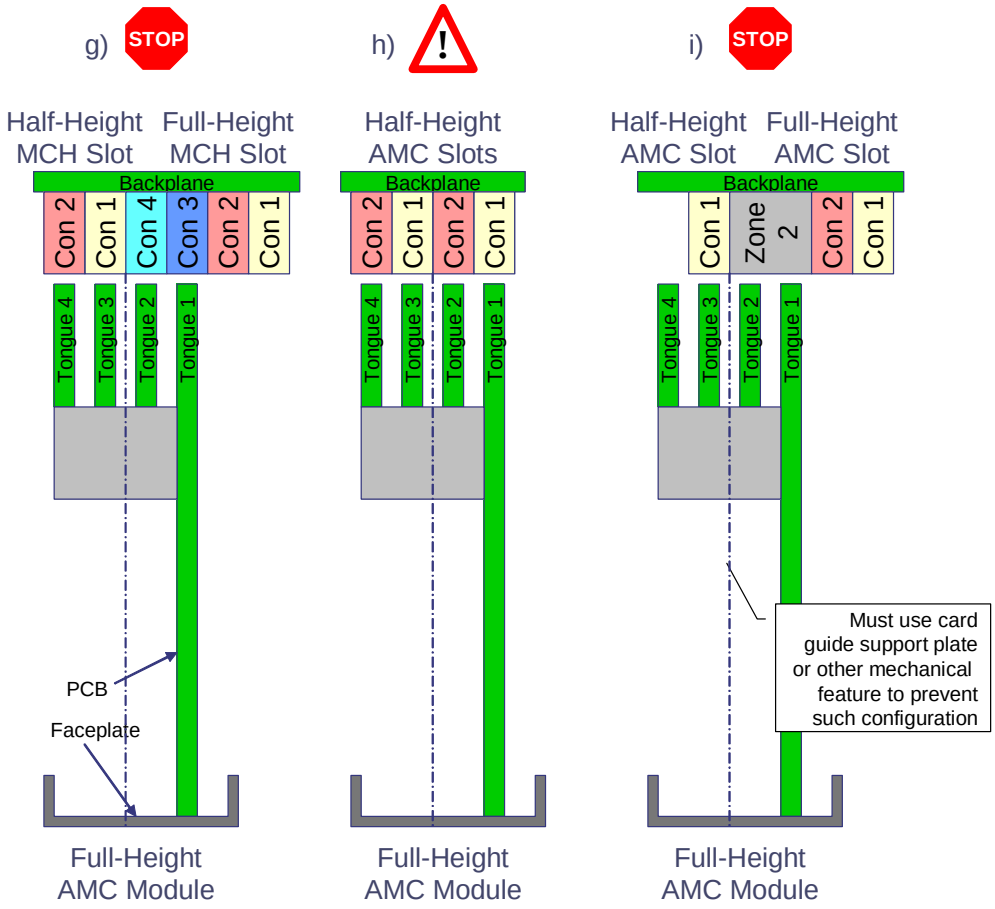

Note: Cases d), f), g) and i) can be prevented by not instantiating any guide rails aligned with Connectors 3. Only case h) and i) can be prevented by using a guide support plate between each Slot, which would prevent such a Full-Height AdvancedMC from sliding into its Slot. Case i) has to be prevented this way, while other cases are tolerable from a mechanical and electrical standpoint, as elaborated upon later in this section.

Property of CERN - For Internal Use Only – External Distribution Prohibited

A.3 Power management implications

¶ 15 It is very important that any mis-insertion does not result in any damage or service interruption. The Power Module is not actively involved in the mis-insertion resolution. However, the PWR_ON signal mechanism described in Section A.5.4, "PWR_ON pin" is used to apply Payload Power only to MCH Modules while correctly inserted in an MCH Slot.

Note: The Power Module does not actively distinguish between AdvancedMC and MCH Modules inserted in any Slot. It is the Module itself, in this case the MCH, that requests Payload Power when in an MCH Slot. This request is handled via a hardware signal (PWR_ON) that can be passively pulled up and does not involve or require (but does not preclude either) any controller functionality.

¶ 16 Mis-insertion detection also takes advantage of the ability of the Power Module to limit current and detect over-current conditions on Management Power, as outlined in Section A.4.4, "Detecting mis-insertions".

A.4 System management implications

¶ 17 This section elaborates on the following topics in light of system management:

- Optional MMC instance on MCH Module and support for a thirteenth IPMB-L port
- Using an AdvancedMC in an MCH Slot
- Using an MCH in an AdvancedMC Slot
- Detecting mis-insertions

Property of CERN - For Internal Use Only – External Distribution Prohibited

A.4.1 Optional MMC instance on MCH Module

¶ 18 Although not mandated in this specification, an MCH could be designed with an instance of MMC, just like an AdvancedMC has an MMC. This MMC on the MCH would be accessed through the IPMB-L bus located on exactly the same pins as an AdvancedMC. This is shown in Figure A-5.

Figure A-5 MMC instance on MCH Module

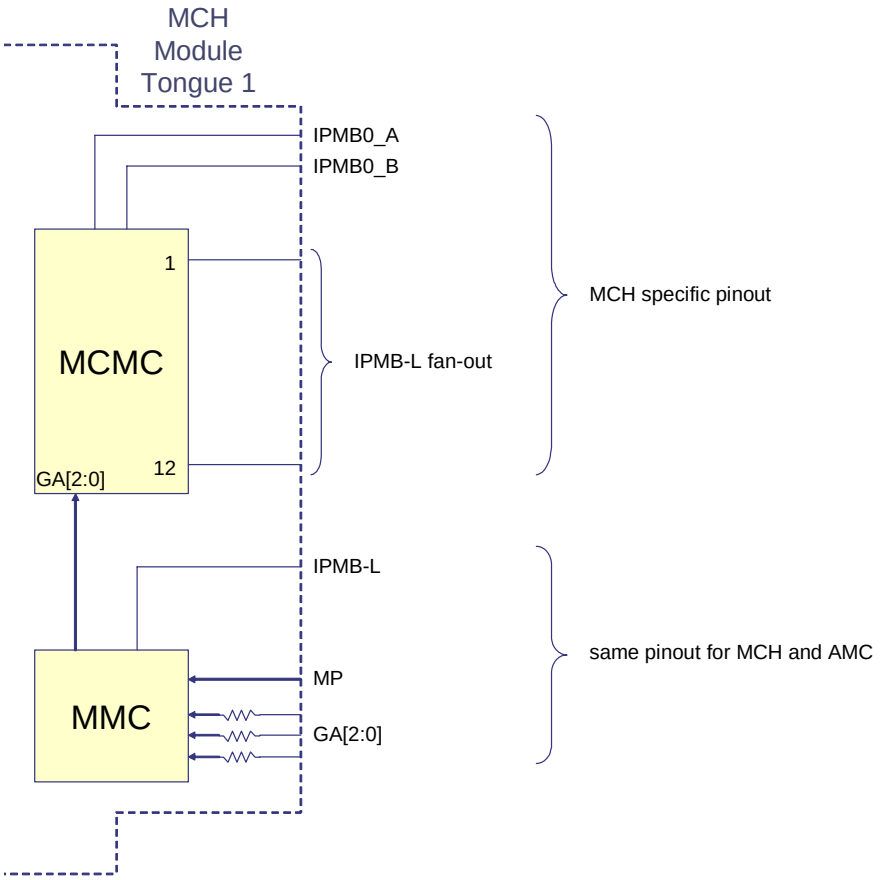

Property of CERN - For Internal Use Only – External Distribution Prohibited

A.4.1.1 Accessing the MMC on an MCH while in an AdvancedMC Slot

¶ 19 If such MMC-capable MCH is inserted into an AdvancedMC Slot, then the active MCH (that is located in an MCH Slot) can interact with that MMC. This allows the system to identify the type of Module just inserted and act accordingly. This is shown in Figure A-6.

¶ 20 If the MCH is capable of operating in an AdvancedMC Slot (information provided by E-Keying), the system can decide to apply Payload Power to that Slot. The MMC could advantageously be used to initialize the MCH and its components in a specific mode that is used when the MCH is plugged into an AdvancedMC Slot (disable the MCMC and associated IPMB0 and IPMB-L lines by example).

¶ 21 If however, the MCH is not designed to be capable of operating in an AdvancedMC Slot, then the system would just not apply Payload Power to it and notify the user that there is a mis-insertion.

Figure A-6 Accessing the MMC on an MCH while in an AdvancedMC Slot

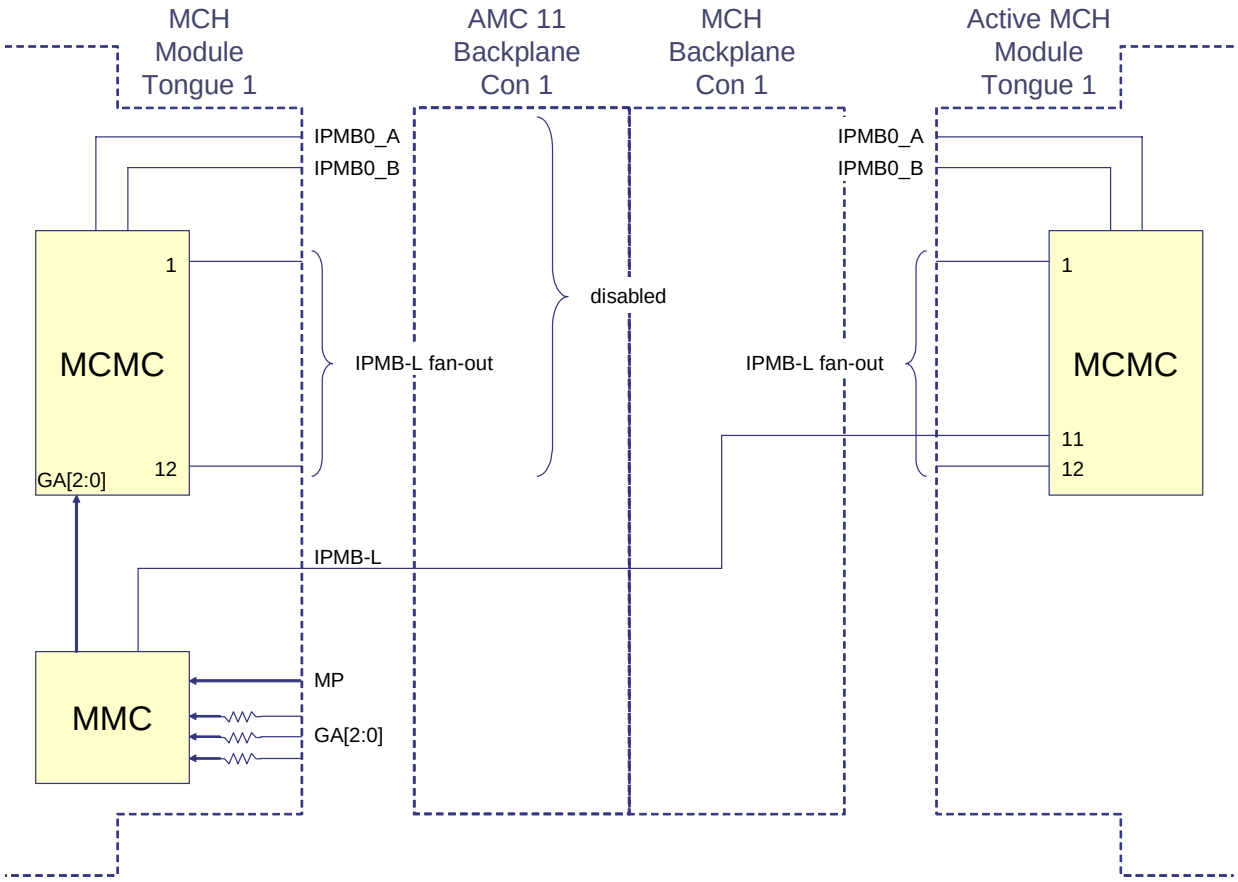

Property of CERN - For Internal Use Only – External Distribution Prohibited

A.4.1.2 Accessing the MMC on an MCH while in an MCH Slot

¶ 22 To access the MMC on the MCH while in an MCH Slot, the other MCH must be designed to support a thirteenth IPMB-L port, in addition to the first twelve ports that are dedicated to interact with AdvancedMC Slots. That thirteenth port is directly connected to the other MCH Slot in the MicroTCA Carrier. This is shown on Figure A-7.

¶ 23 If the active MCH is also designed with an MMC, then both its MCMC and its MMC are on the same bus, as shown in Figure A-8. In this case, the MCMC in Slot MCH 2 can access the MMC in Slot MCH 1 by using the target address defined by GA[2:0] of the MCH 1 Slot.

Note: In this case, the MCMC in Slot MCH 2 could also access its own local MMC by using the target address defined by GA[2:0] of the MCH 2 Slot.

¶ 24 The MCMC and the MMC are shown as two separate logical entities here. They could as well be instantiated in a single physical device. However, it should be noted that there is limited power available from Management Power, which is most likely enough to support an MMC, but may not be enough for both an MMC and an MCMC. It is therefore expected that the MMC and MCMC be two separate physical devices where the MMC is powered by Management Power and the MCMC is powered by Payload Power, or share a common very low power CPU.

Figure A-7 Accessing the MMC on an MCH while in an MCH Slot

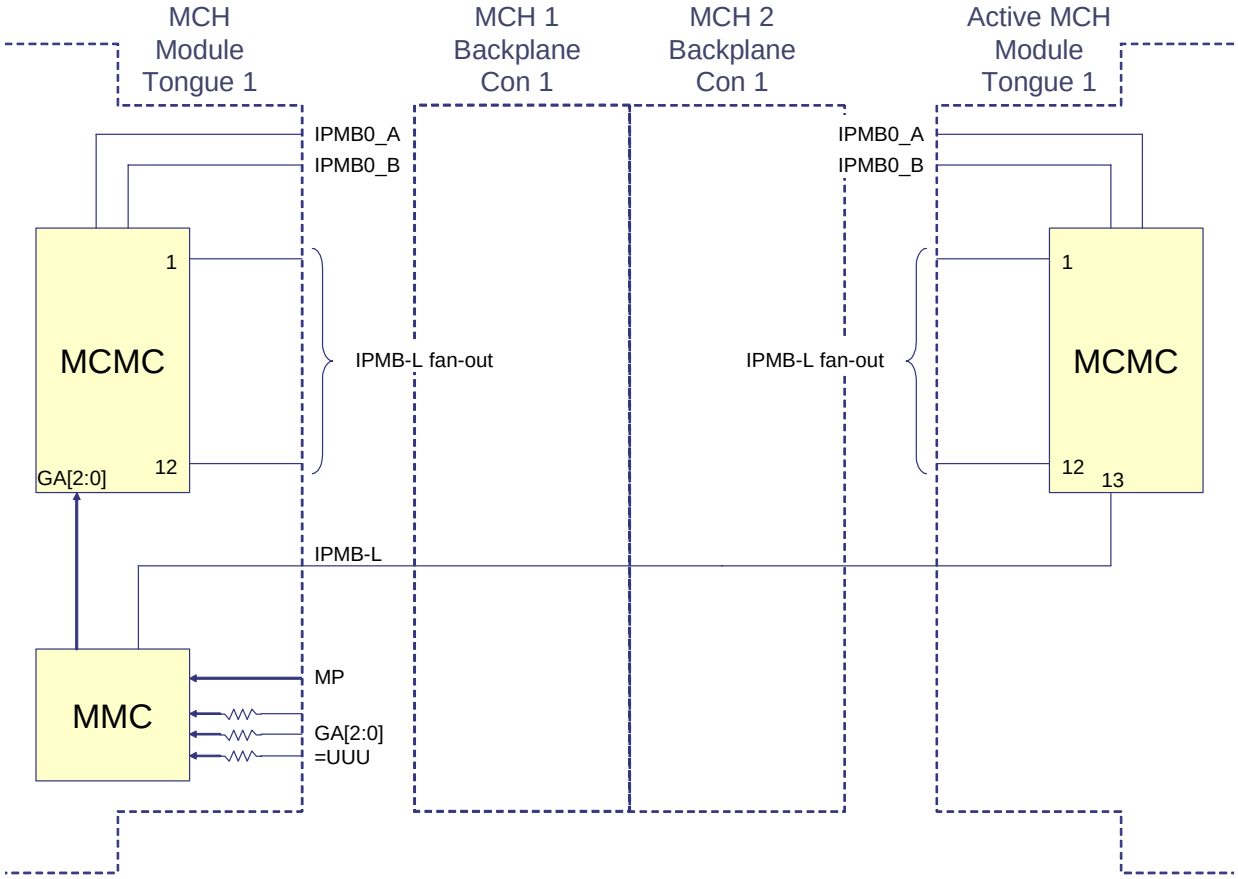

Property of CERN - For Internal Use Only – External Distribution Prohibited

Figure A-8 MMC and MCMC are on the same IPMB-L bus

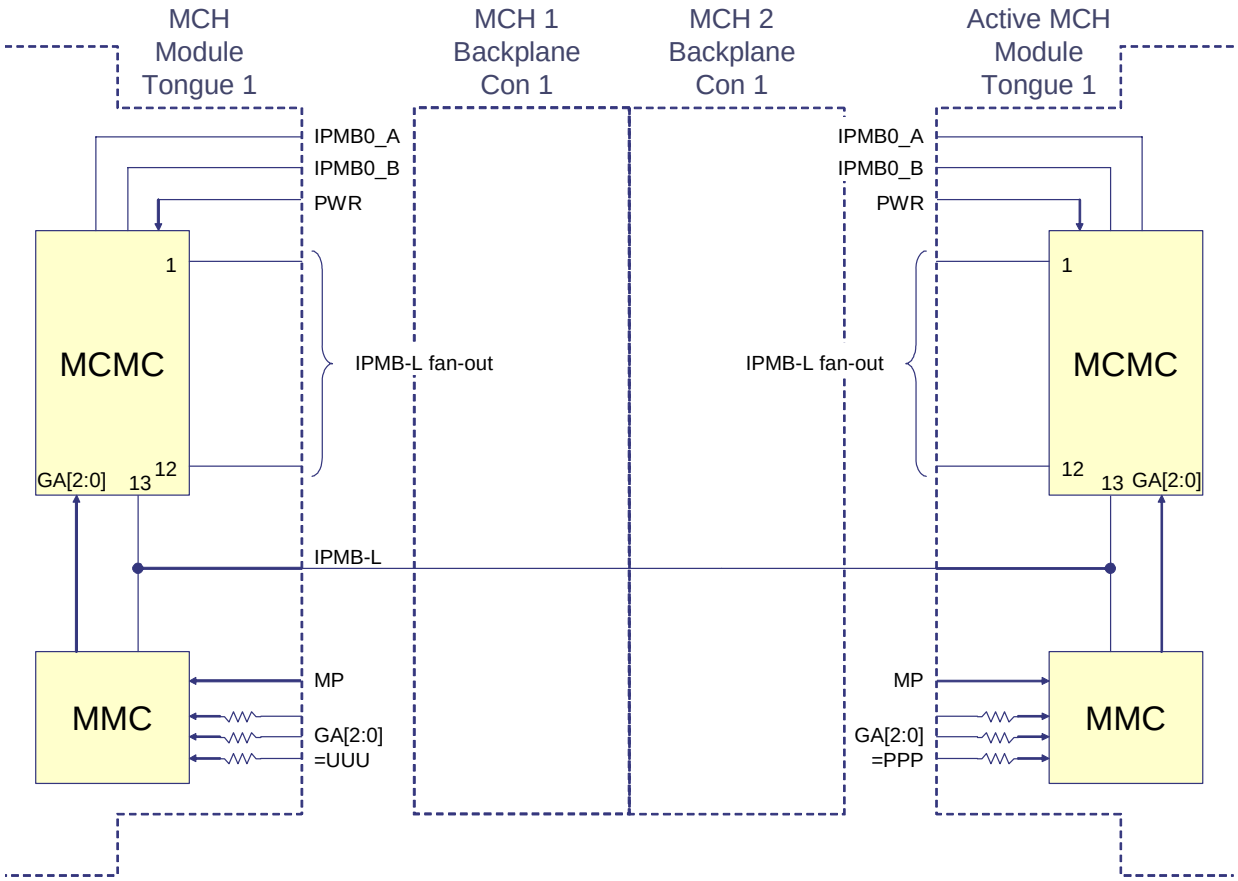

Property of CERN - For Internal Use Only – External Distribution Prohibited

A.4.2 Using an AdvancedMC in an MCH Slot

¶ 25 An AdvancedMC could be detected in an MCH Slot, provided the MCH supports a thirteenth IPMB-L port, as described in Section A.4.1.2, "Accessing the MMC on an MCH while in an MCH Slot" and shown in Figure A-9.

¶ 26 The MMC of such an AdvancedMC should also be enhanced from the one defined in the AMC.0 R1.0 specification to recognize itself inserted into an MCH Slot (GA[2:0]=UUU or PPP).

¶ 27 If these conditions are true, then such an AdvancedMC could advantageously be used in non-redundant systems, where a thirteenth AdvancedMC would be beneficial.

Figure A-9 Accessing the MMC on an AdvancedMC while in an MCH Slot

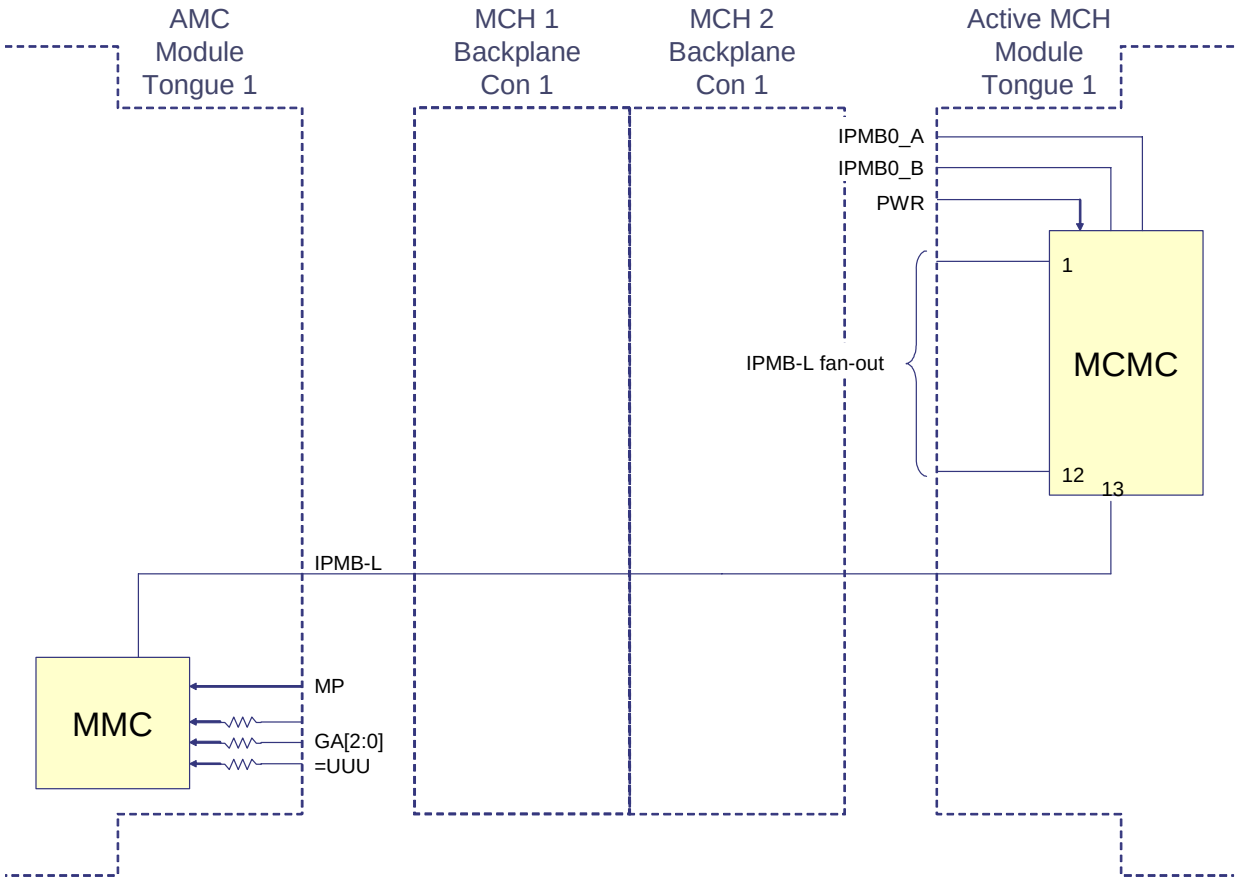

Property of CERN - For Internal Use Only – External Distribution Prohibited

¶ 28 In addition to the IPMB-L interface being accessible, the MCH to MCH cross-connections are also available. This is shown in Figure A-10. The update fabric Channel from the active MCH now connects to Port 0 of the AdvancedMC. Ports 1 to 7 and 16 to 20 on the AdvancedMC are now connected to Port 1 on other AdvancedMC Slots. Ports 8 to 15 on the AdvancedMC must be kept tri-stated to avoid contention on the IPMB-L busses, IPMB0 busses, and TMREQ# signal.

¶ 29 The clock lines on the AdvancedMC are now connected to the cross-over signals on the active MCH. The MCH can be designed such that the MCMC can either use these cross-over signals to interact with another MCH (for mastership negotiation by example) or use these signals to carry clocks in a similar way, as the clock is optionally distributed on Connector 2 of the MCH. If the MCH does not support such clocks on the cross-over signals, then the AdvancedMC can disable these clock lines, or the MCMC can disregard these signals.

Figure A-10 MCH-to-MCH cross-connections available to an AdvancedMC while in an MCH Slot

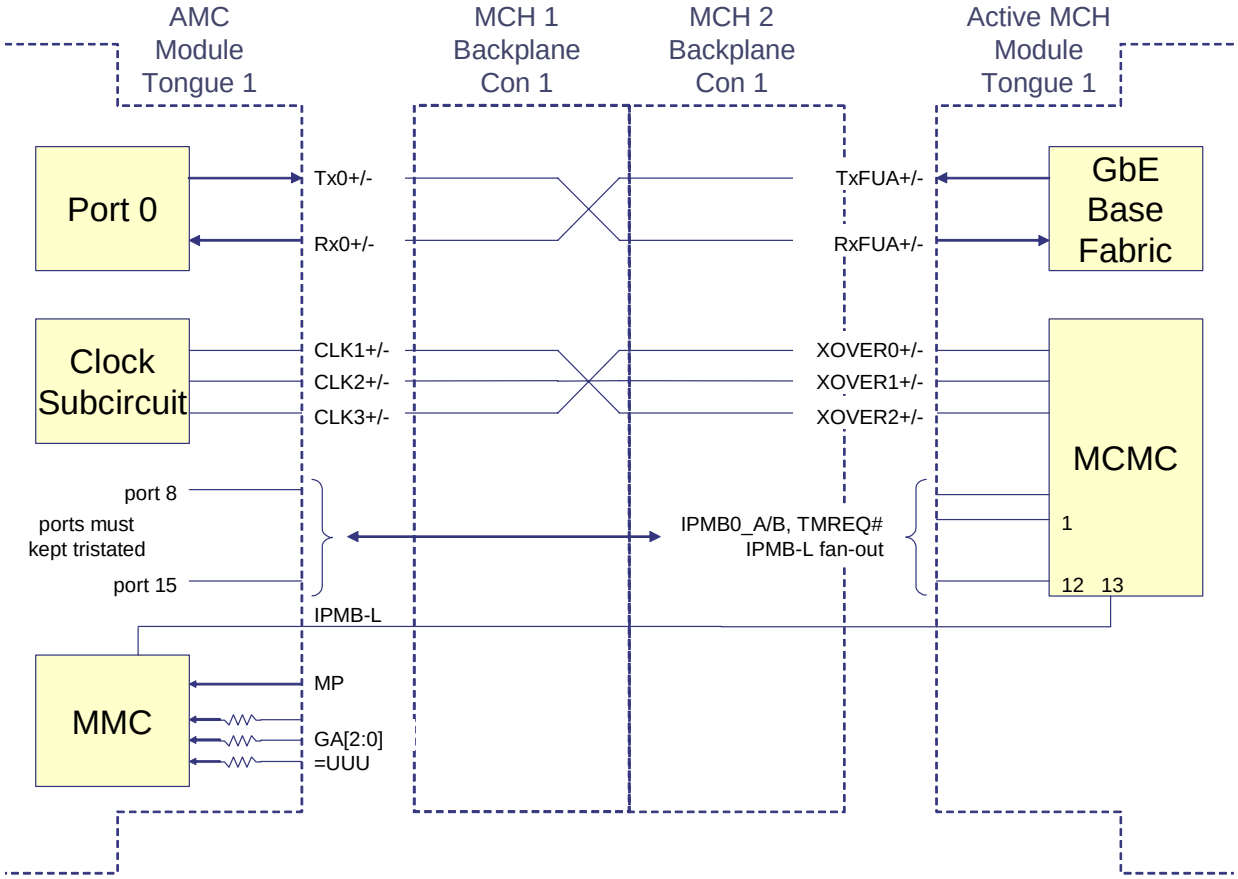

Property of CERN - For Internal Use Only – External Distribution Prohibited

A.4.3 Using an MCH in an AdvancedMC Slot

¶ 30 Some MCH implementations may chose to support much more than the MCMC functionality required on a simple MCH. This kind of MCH could by example hold a very powerful CPU or communication processor subsystem. The MCMC and the GbE base fabric would be a minor addition to such subsystem (i.e. a powerful AdvancedMC could be enhanced to act as an MCH by adding the base fabric and the MCMC functionality to its main functions). Such an MCH (or enhanced AdvancedMC) could be used in both MCH and AdvancedMC Slots. One advantage of such a design choice may be related to Module's inventory management.

¶ 31 It is important to understand that when such an MCH is used in an AdvancedMC Slot, it can not serve the role of an MCH, and only its enhanced functionality can be used. Typically the MCMC would be disabled in such case, as would some of the ports of the base fabric.

¶ 32 A subset of the MCH interconnect resources are still available when it is used in an AdvancedMC Slot. This is shown in Figure A-11, "MCH interconnect resources available while in an AdvancedMC Slot".

¶ 33 The fabric update Channels can still be used to communicate with the active MCH. Base fabric ports are now mapped to Ports 1 to 7 and Ports 16 to 20 of an AdvancedMC Slot. Note that Port 1 could still be used to communicate to MCH 2 in a fully redundant system.

¶ 34 The cross-over signals could still be used, if the MCH is designed to handle clocks as they would on a standard AdvancedMC Module.

¶ 35 IPMB-L busses, IPMB0 busses, and TMREQ# on the MCH must be kept tri-stated unless unconnected on the Backplane in this specific AdvancedMC Slot.

Property of CERN - For Internal Use Only – External Distribution Prohibited

Figure A-11 MCH interconnect resources available while in an AdvancedMC Slot

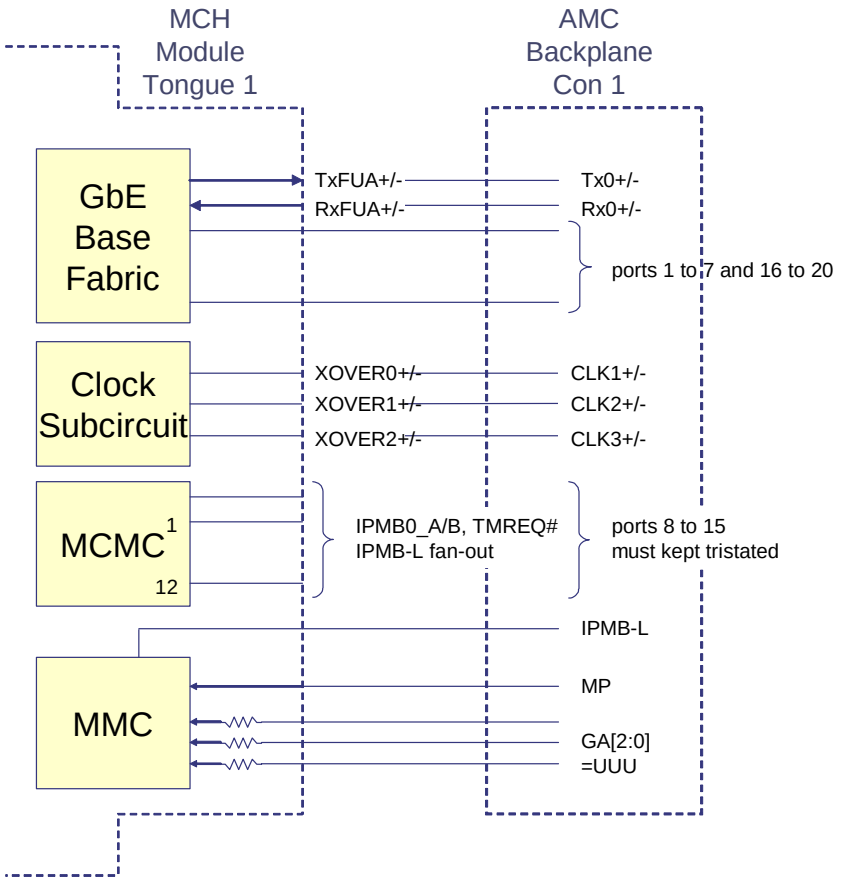

A.4.4 Detecting mis-insertions

¶ 36 System management has to be designed such that it can gracefully handle mis-insertion situations. While some mis-insertion conditions are easy to identify, others are not and may look more like a fault condition. Some conditions may be considered tolerable and even operable. Multiple gravity levels are to be considered, each one with its appropriate set of corrective actions.

¶ 37 The system management process of detecting a mis-insertion is highly facilitated and enhanced if the MCH instantiates an MMC and a thirteenth port on the MCMC, as outlined in Section A.4.1, “Optional MMC instance on MCH Module”. If the MCH does not instantiate either one, then mis-insertion should not cause any damage or service interruption. However, it may not be possible to detect or distinguish between mis-insertion and some other kind of failure mode.

Property of CERN - For Internal Use Only – External Distribution Prohibited

¶ 38 Table A-2 lists how mis-insertion cases can be identified.

Table A-2 Detecting mis-insertions

Mis-insertion case	Validity	Identification
Figure A-1, b) & e)	⚠	If an MCH is inserted in an AdvancedMC Slot, it will not get Payload Power - even when pulling PWR_ON high - since this signal is connected to GND on the Backplane in an AdvancedMC Slot. If the MCH has no MMC, then an IPMI command sent by the active MCH to that Slot will time-out. System management can deduct that there is something inserted in that Slot and that the MMC is not responding, but it can't say whether it's and AdvancedMC or an MCH. To distinguish between an AdvancedMC and an MCH Module, the MCH Module inserted has to have an MMC. This MMC can the be accessed my the active MCH just as if the Module was a regular AdvancedMC. This MMC can also detect that the MCH is plugged into a non MCH Slot by looking at the GA[2:0] lines. It could then display some error status on the front panel LEDs if it is not designed to operate in such a Slot. If the MCH is designed to be able to operate in such AdvancedMC Slot, then such information could be provide by the MMC once requested by the active MCH. The active MCH could then decide to apply Payload Power to that MCH. The MMC could also provide some information to the MCMC on the same MCH that would keep it disabled while and after powering up.
Figure A-1, d) & f)	STOP	The case where an MCH is inserted in an MCH Slot and tongue 1 mates with Connector 3 can't be detected from a system management point of view. There are no management signals on Connector 3 that can detect the insertion of a Module. The MCH Module would not get either Management Power nor Payload Power, therefore the status blue LED on the front panel would not lit, which should be noticeable by the operator.
Figure A-2, g)	STOP	If tongue 2, 3 or 4 mate with Connector 1 then it is possible to detect such mis-insertion. Pin 4 on tongues 2, 3 and 4 are shorted to GND on the MCH, and will short Management Power to GND once mated. So the MCH will not get any power. The Power Modules can detect such a short and system management can report a faulty mis-insertion.
Figure A-2, h)	STOP	This case is a combination of two cases. If the MCH has an MMC then the MCMC on the active MCH can access it and identify such mis-insertion. If the MCH does not have such MMC, then tongue 3 connecting to Connector 1 of the adjacent Slot will short Management Power to GND. The Power Modules can detect such a short and system management can report a faulty mis-insertion.
Figure A-2, i)	STOP	Tongue 3 connecting to Connector 1 of the adjacent Slot will short Management Power to GND. The Power Modules can detect such a short and system management can report a faulty mis-insertion. However, such configuration should be mechanically prevented as there is a risk for the tongues 1 and 2 to hit some Auxiliary Connectors.

Property of CERN - For Internal Use Only – External Distribution Prohibited

Table A-2 Detecting mis-insertions (continued)

Mis-insertion case	Validity	Identification
Figure A-3, a) & c)	⚠	If an AdvancedMC is inserted in an MCH Slot, it will not get Payload Power since its pin 170 is either connected to GND on the AdvancedMC Module or just not connected. This pin 170 is defined as PWR_ON on the MCH Connector. Only an IPMI command to the Power Module can apply power to the Slot. If the MMC on the AdvancedMC has the capability to identify that it is plugged into an MCH Slot by probing the GA[2:0] lines, and if the active MCH supports the thirteenth IPMB-L port, then the MMC on the AdvancedMC Module can be accessed. The system management can then take appropriate actions to either apply Payload Power to that AdvancedMC Module if it is capable of operating in an MCH Slot, or it can leave it unpowered and consider this a mis-insertion. If the MCH does not support a thirteenth IPMB-L port, then it is not possible to identify the type of Module inserted in that MCH Slot. If the MMC on the AdvancedMC is not able to identify itself plugged into an MCH Slot by probing the GA[2:0] address lines, then the MMC may not be able to reply to IPMI commands sent by the active MCH. Actually, the MMC may even consider that there is a fault on the GA[2:0] lines since they don't match one valid entry in Table 3-2 of AMC.0 R1.0. In that case the MMC may send a message to the active MCH indicating a fault condition, which can be interpreted by the system management and identified as a mis-insertion.
Figure A-3, d) & f)	STOP	The case where an AdvancedMC is inserted in an MCH Slot and tongue 1 mates with Connector 3 can't be detected from a system management point of view. There are no management signals on Connector 3 that can detect the insertion of a Module. The AdvancedMC Module would not get either Management Power nor Payload Power, therefore the status blue LED on the front panel would not lit, which should be noticeable by the operator.
Figure A-4, g)	STOP	If tongue 2, 3 or 4 mate with Connector 1 then it is possible to detect such mis-insertion. Pin 4 on tongues 2, 3 and 4 are shorted to GND on the AdvancedMC (assuming the AdvancedMC uses a compatible pinout for the Auxiliary Connectors in Zone 2), and will short Management Power to GND once mated. So the AdvancedMC will not get any power. The Power Modules can detect such a short and system management can report a faulty mis-insertion.
Figure A-4, h)	STOP	This case is a combination of two cases. With tongue 1 of the AdvancedMC, the MCMC on the active MCH can access the MMC on the AdvancedMC and identify such mis-insertion. On the other hand, tongue 3 connecting to Connector 1 of the adjacent Slot will short Management Power to GND. The Power Modules can detect such a short and system management can report a faulty mis-insertion.
Figure A-2, i)	STOP	Tongue 3 connecting to Connector 1 of the adjacent Slot will short Management Power to GND. The Power Modules can detect such a short and system management can report a faulty mis-insertion. However, such configuration should be mechanically prevented as there is a risk for the tongues 1 and 2 to hit some Auxiliary Connectors.

Property of CERN - For Internal Use Only – External Distribution Prohibited

A.5 Hardware implications

¶ 39 The intent of this section is to list the similarities and differences in pin assignment between MCH and AdvancedMC, while highlighting the hardware–specific implications of mis-insertion. For each kind of pin or interface, the pin assignment is described and followed by some elaboration on misalignment cases.

¶ 40 Figures in this appendix use the convention to show the Backplane Connector oriented as seen from the front of the Subrack, as outlined in Figure A-12.

¶ 41 Port numbering on the AdvancedMC is based on Figure 6-7 “AMC Port mapping regions” of AMC.0 R1.0.

Figure A-12 Backplane Connector orientation–front Subrack view

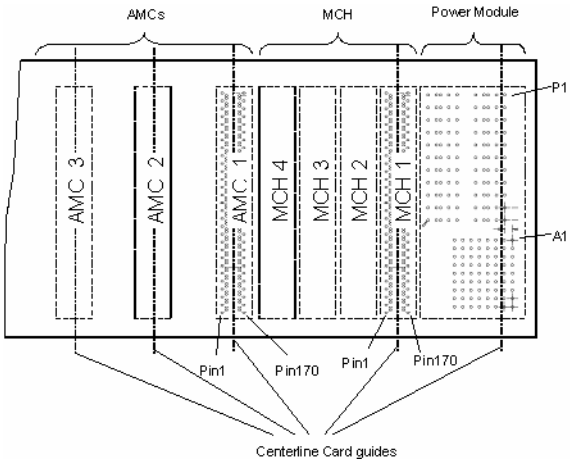

¶ 42 The MCH pinout has been carefully done with the intent of keeping it as compatible as possible with the AdvancedMC pinout.

¶ 43 Figure A-13 shows an overview of the MCH Backplane Connector 1 partitioning compared to the equivalent one for an AdvancedMC.

¶ 44 Pin assignment differences between MCH and AdvancedMC are:

- GND pins at same locations, except pin 170, which is PWR_ON on MCH
- PS0# and PS1# pins at same locations
- PWR_ON pin is new on the MCH
- GA[2:0] pins at same locations
- ENABLE# pin at same location
- SDA_L and SCL_L pins
- JTAG pins

Property of CERN - For Internal Use Only – External Distribution Prohibited

- Cross-over pins are new on MCH, and are at the same equivalent location as the three clock lines on AdvancedMC
- TMREQ#, I2C_SDA, and I2C_SCL pins are new on MCH and are at the equivalent location as port #15 on AdvancedMC

Figure A-13 MCH vs. AdvancedMC Connector 1 pin assignment overview

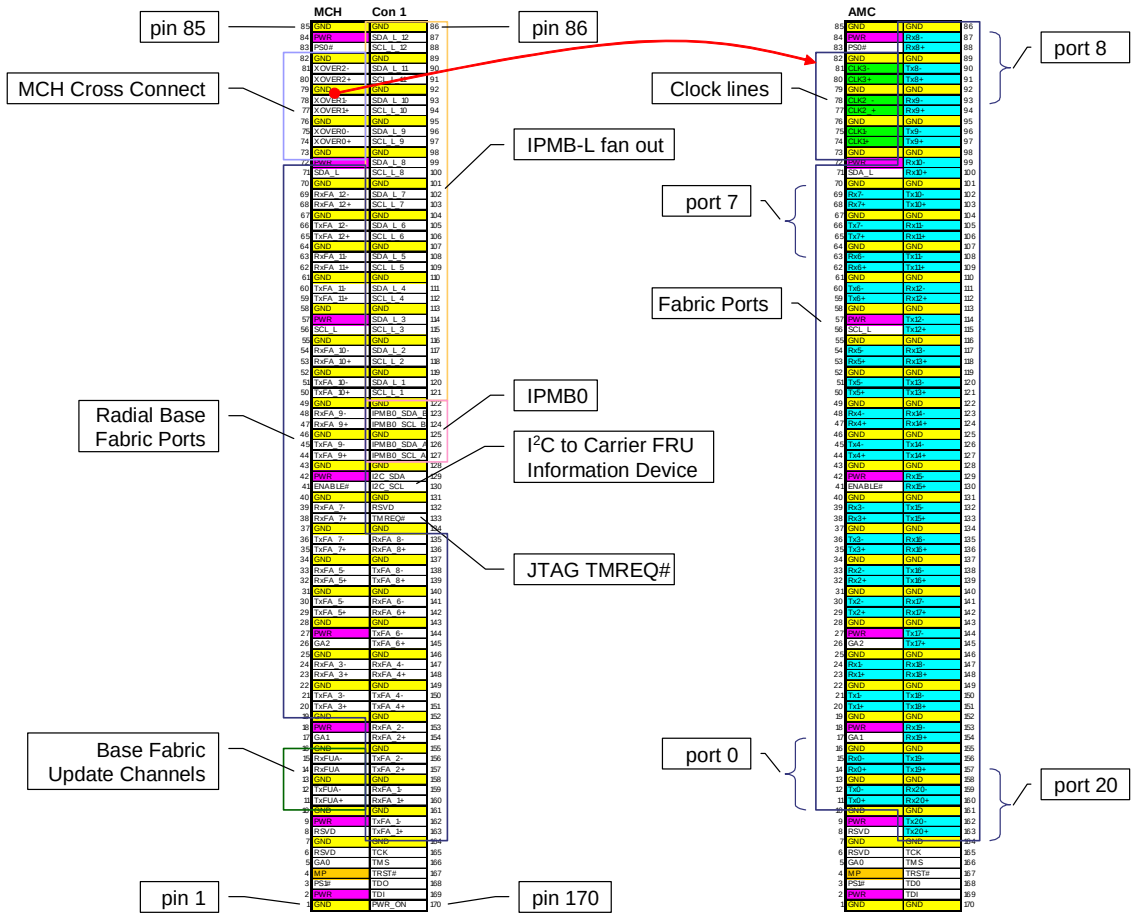

A.5.1 GND pins at same locations

¶ 45 Except for pin 170 of Connector 1, which is discussed in Section A.5.4, "PWR_ON pin", all GND pins are kept at the same location across all Connectors of the MCH and AdvancedMC.

Note: The press-fit version of the AdvancedMC Backplane Connector uses a single, shared, GND pin on the Backplane for two GND pins on the AdvancedMC interface side, but only in the high-speed differential pair region (i.e. pin 170 is kept separate from pin 1, even on the press-fit Connector).

Property of CERN - For Internal Use Only – External Distribution Prohibited

¶ 46 Figure A-14 shows the GND pin arrangement of Connectors 4, 3, 2, and 1 of an MCH side-by-side with the one of an AdvancedMC Connector 1.

Figure A-14 GND pin assignments identical between MCH and AdvancedMC

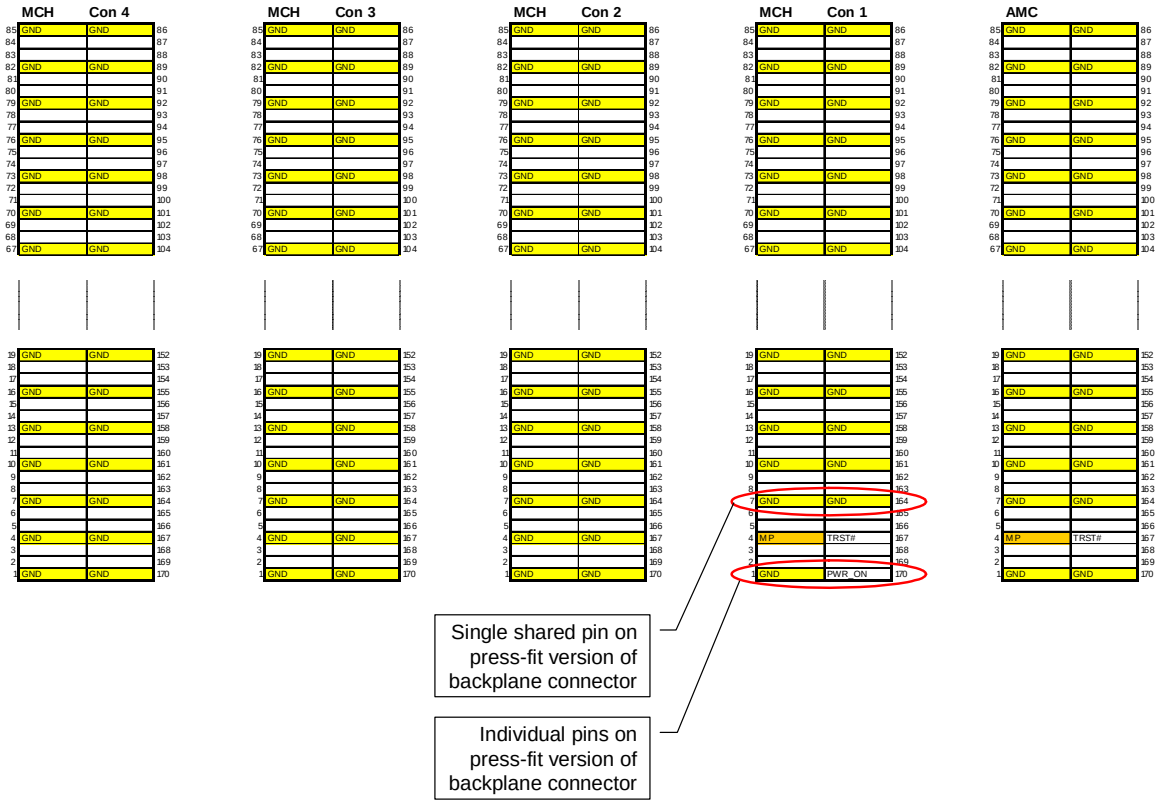

Note: Connectors 2, 3, and 4 have pins 4 and 167 defined as GND. This is useful for signal integrity reasons, as well as for detecting mis-insertions.

Property of CERN - For Internal Use Only – External Distribution Prohibited

¶ 47 In case of mis-insertion of tongue 2, 3, or 4 into Connector 1 of either an AdvancedMC or an MCH Slot, MP and TRST# on the Backplane will get shorted to GND by the tongue connection, as shown in Figure A-15.

¶ 48 MP is driven by the Power Module, which should sustain a permanent short on MP. System management can also detect such a faulty condition and take appropriate actions, as mentioned in Section A.4.4, “Detecting mis-insertions”.

¶ 49 TRST# is pulled-up by the JTAG switch, which should sustain a permanent short on this pin.

Figure A-15 MP and TRST# shorted to GND when tongue 2, 3, or 4 is inserted in Connector 1

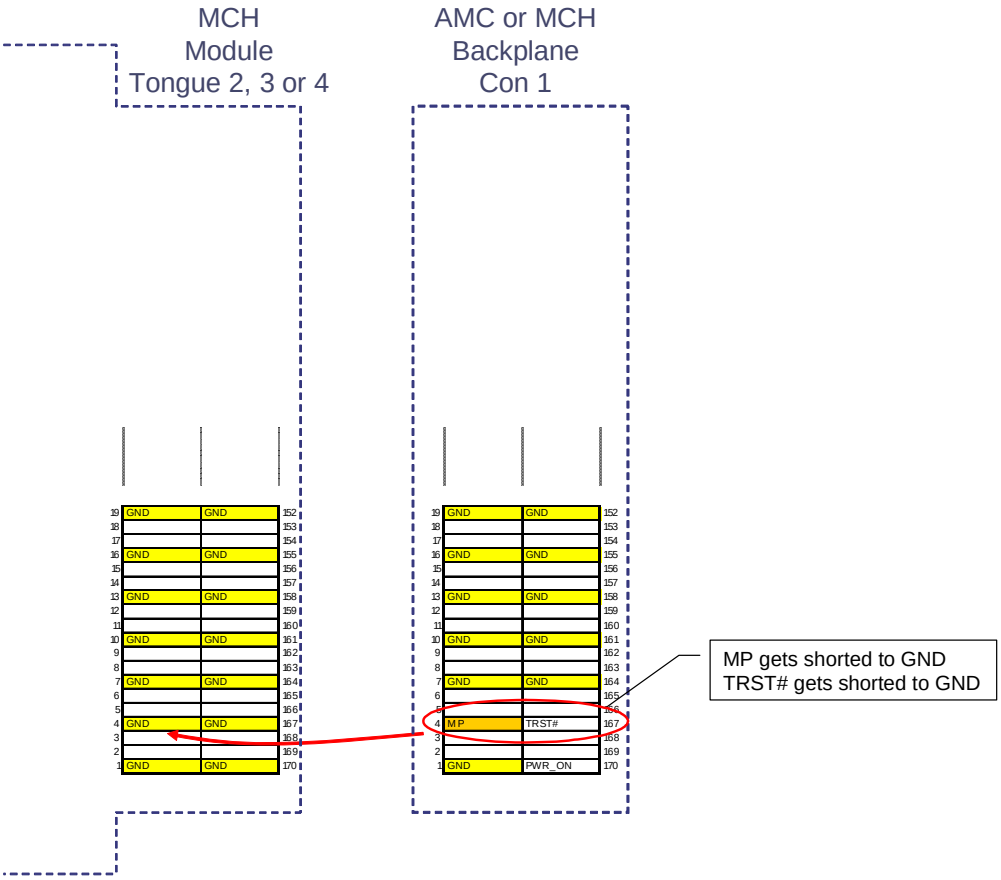

Property of CERN - For Internal Use Only – External Distribution Prohibited

¶ 50 In case of mis-insertion of Tongue 1 of either an AdvancedMC or MCH into Connectors 2, 3, or 4 of an MCH, pins MP and TRST# on the Module are getting shorted to GND by the Backplane. This is shown in Figure A-16.

Note: All signals connected to a device (like the MMC) that has its power supply referenced to MP will get shorted to GND through the internal ESD diodes. This can typically be the case for GA[2:0], ENABLE#, SDA_L, SCL_L. Therefore, fabric signals on Connector 2, 3, or 4 would get shorted to GND through these internal ESD diodes. Note that only the equivalent of the Tx side of the fabric ports will get shorted to GND, which is not disruptive and is perfectly acceptable for the receiver end.

Figure A-16 MP and TRST# shorted to GND when Connector 1 is inserted in tongue 2, 3, or 4

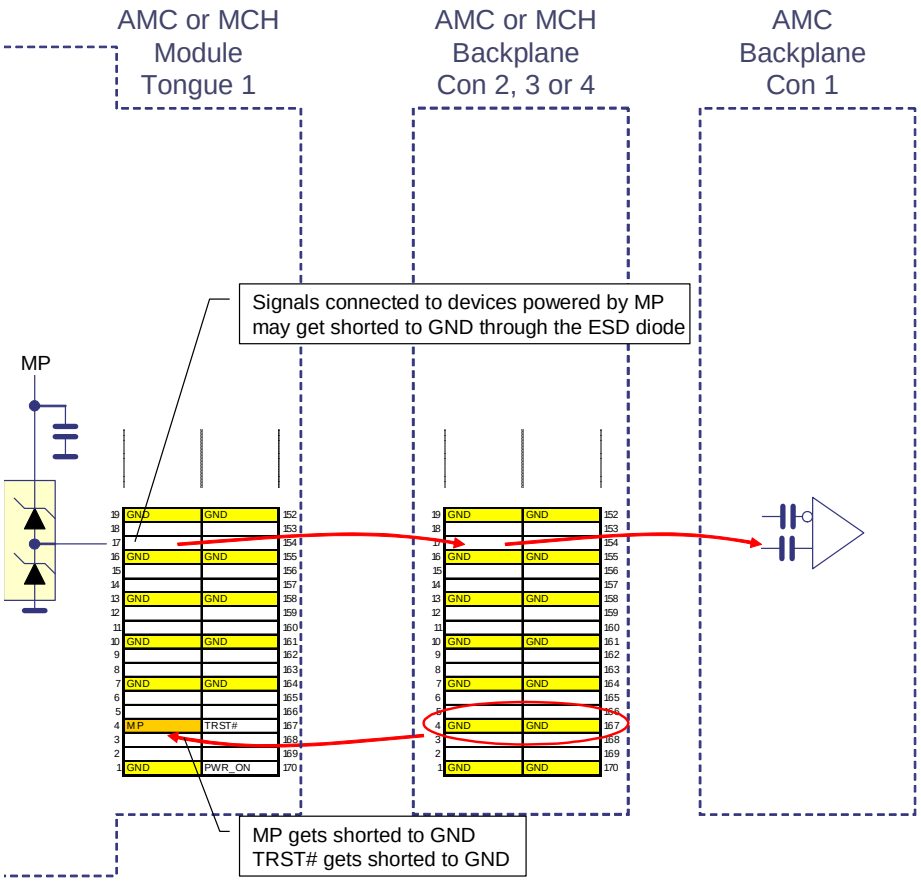

A.5.2 PS0# and PS1# pins at same locations

¶ 51 Detection of the presence of a Module in an MCH Slots is identical to the one of an AdvancedMC Module in an AdvancedMC Slot. The PS1# signal is pulled up on all Power Modules. When fully mated, PS0# is tied to GND on the Backplane. A Schottky diode on the AdvancedMC or MCH Module allows current to flow from PS1# to PS0#, which is detected by the Power Module as an active low level on PS1#.

Property of CERN - For Internal Use Only – External Distribution Prohibited

¶ 52 Figure A-17 shows that PS0# pin on the MCH Connector in the same location as on an AdvancedMC Connector. Therefore, an MCH will get its PS0# pin connected to GND when inserted into either an MCH or an AdvancedMC Slot. Similarly, an AdvancedMC will get its PS0# pin connected to GND when inserted into either an AdvancedMC or an MCH Slot (i.e. PS0# usage is identical across MCH and AdvancedMC Modules and Slots).

¶ 53 Figure A-17 shows that PS1# pin on an MCH Connector is in the same location as on an AdvancedMC Connector. Therefore, an MCH will get its PS1# pin connected to the Power Modules when inserted into either an MCH or an AdvancedMC Slot. Similarly, an AdvancedMC will get its PS1# pin connected to Power Modules when inserted into either an AdvancedMC or an MCH Slot (i.e. PS1# usage is identical across MCH and AdvancedMC Modules and Slots).

Figure A-17 PS0# and PS1# pin assignment is identical between MCH and AdvancedMC

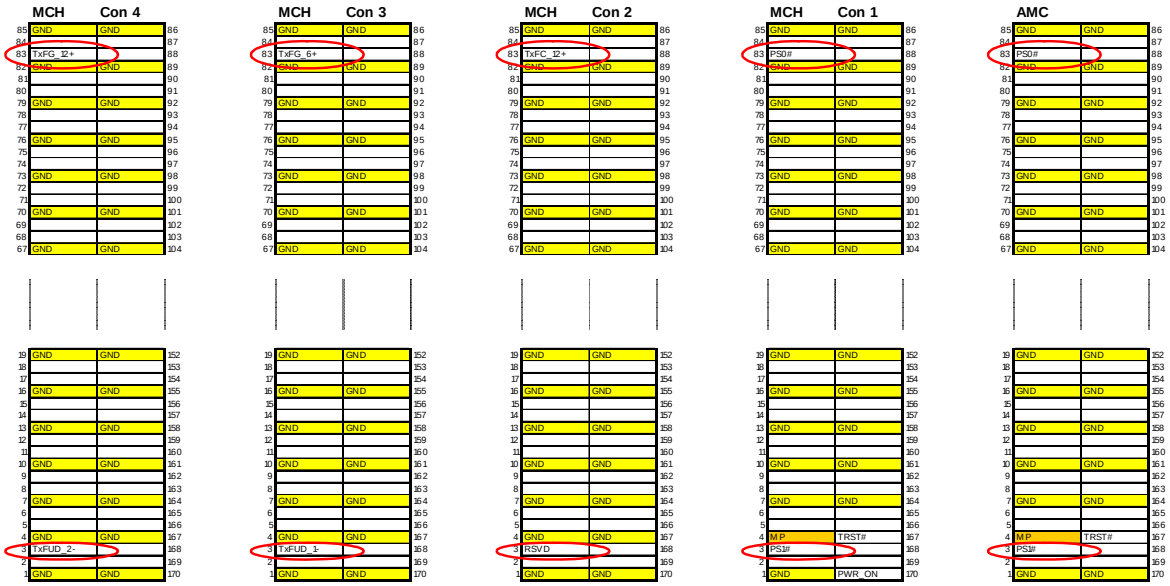

Property of CERN - For Internal Use Only – External Distribution Prohibited

¶ 54 In case of mis-insertion of Tongue 2, 3, or 4 into Connector 1 of either an AdvancedMC or MCH Slot, PS1# on the Backplane will get shorted to GND through the internal ESD diode of the fabric driver (except for Tongue 2, which the equivalent pin is reserved). PS0# on the Backplane is actually connected to GND, which would short the TxFUD_1- or TxFUD_2- fabric signals on the inserted Module. This is shown in Figure A-18. Since PS1# on the Backplane is getting shorted to GND by the internal ESD diode of the fabric port, such mis-insertion can be detected by the Power Module.

Figure A-18 PS1# gets shorted by ESD diode inside fabric Lane transmitter

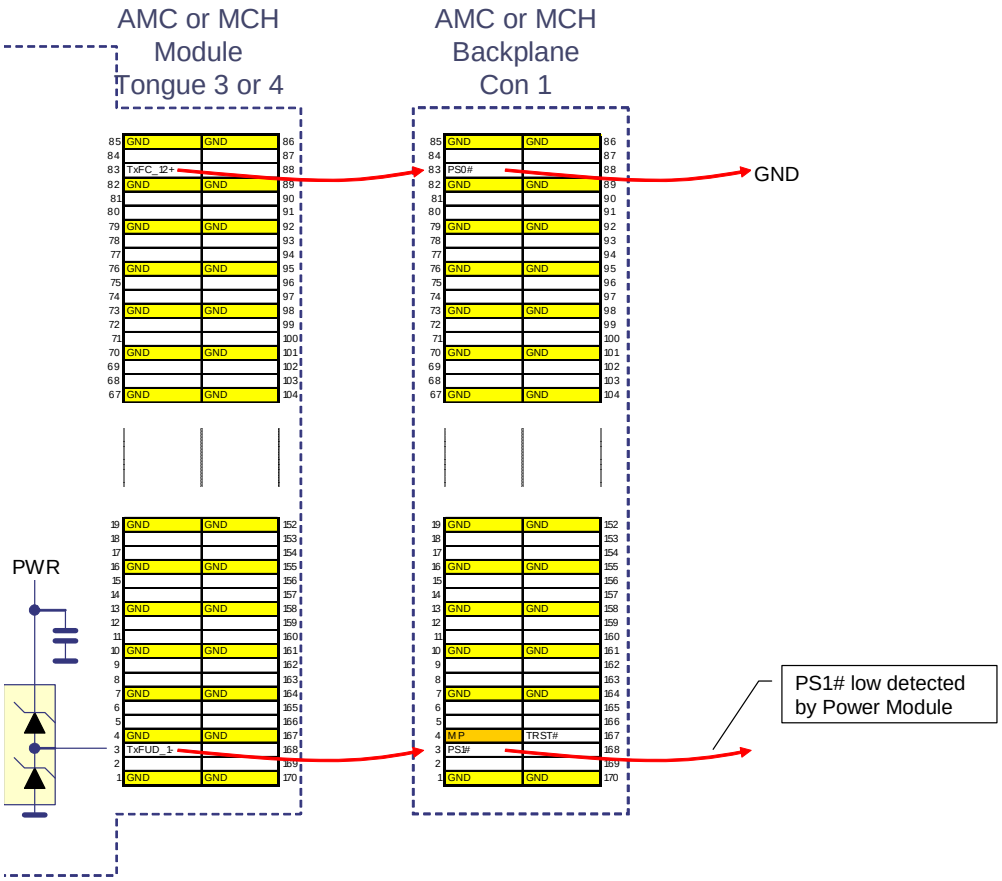

¶ 55 In case of mis-insertion of Tongue 1 into Connector 2, 3, or 4 of an MCH Slot, the fabric interfaces at the equivalent location of PS1# will get shorted to the fabric interface at the equivalent location of PS1# through a Shottky diode. This is shown in Figure A-19. This is not disruptive and is perfectly acceptable for the receiver end.

Figure A-19 Fabric lines on MCH Connector 2, 3, or 4 get shorted by PS0# through diode

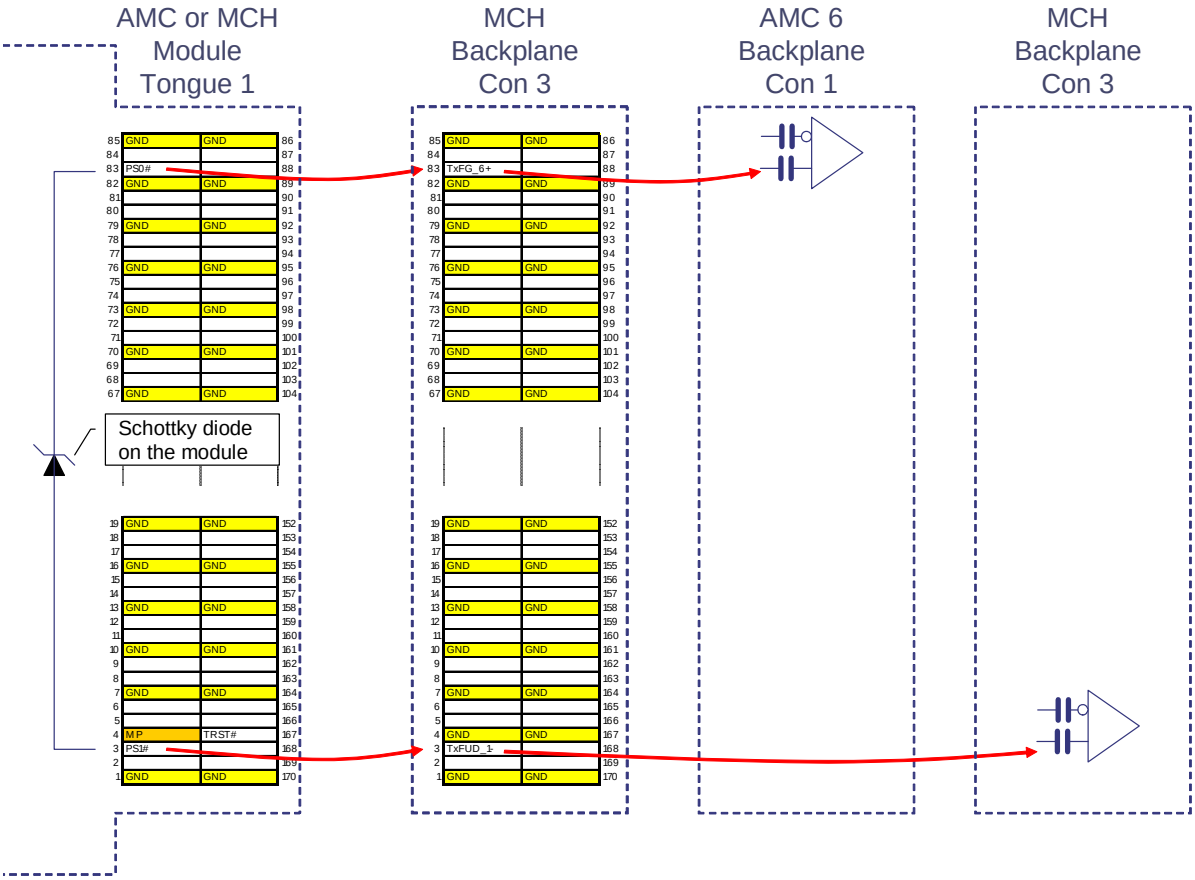

Property of CERN - For Internal Use Only – External Distribution Prohibited

Property of CERN - For Internal Use Only – External Distribution Prohibited

A.5.3 PWR and MP pins at same locations

¶ 56 It is very important that the +12V Payload Power (PWR) pins be kept in the same location as they are shorted together on the Backplane.

¶ 57 Figure A-20 shows that only Connector 1 of the MCH Slot has provision for such power pins. Connectors 2, 3, and 4 have these pins assigned for fabric interfaces instead.

Figure A-20 PWR and MP pin assignments are identical between MCH and AdvancedMC

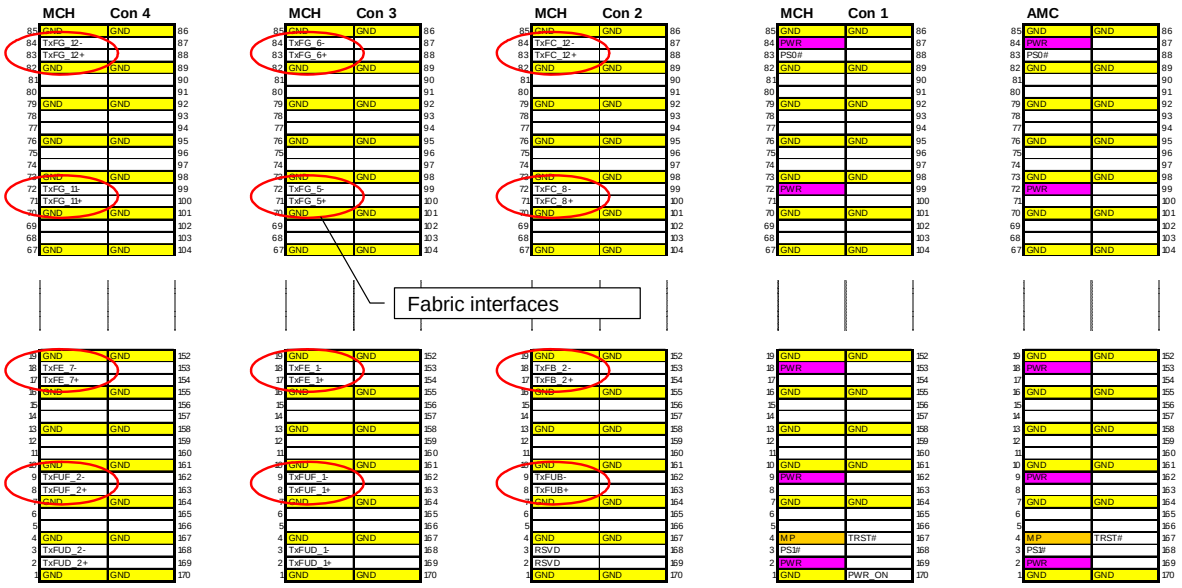

Property of CERN - For Internal Use Only – External Distribution Prohibited

¶ 58 This means that equivalent pins now part of fabric interfaces will be shorted together if an AdvancedMC or an MCH Module Tongue 1 is plugged into Connectors 2, 3, or 4 on the Backplane. This is shown in Figure A-21. This is not an issue, as all the pins on that side of the Connector are all part of the transmit side of the fabric interface (i.e. the short is equivalent of shorting multiple fabric receiver inputs).

Note: The PWR net on the Module will actually be capacitively loaded to GND. It is assumed that this capacitor will be discharged when the Module is inserted. If some charges were left in the capacitor on the Module, then the voltage at the capacitive coupling of the receiver may not be compatible with LVDS receivers. But LVDS receivers are expected to endure such a voltage transient.

Figure A-21 Receiver lines of fabric interfaces on multiple AdvancedMCs get shorted together by PWR

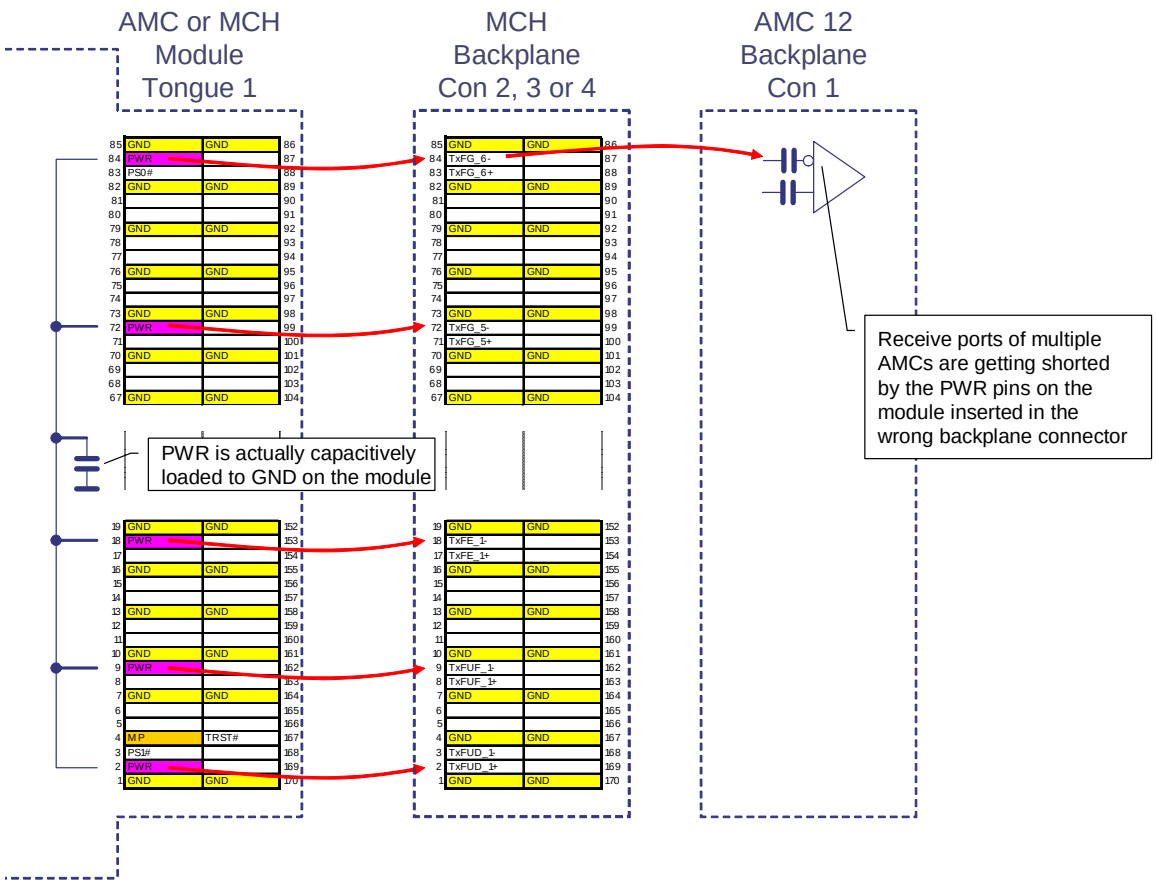

Property of CERN - For Internal Use Only – External Distribution Prohibited

A.5.4 PWR_ON pin

¶ 59 The PWR_ON pin is used to control how an MCH gets Payload Power from the Power Modules.

¶ 60 Figure A-22 below shows how each of the PWR_ON pins of each MCH Slot are connected to all the Power Modules. As mentioned in Section A.5.1, “GND pins at same locations”, pin 170 is defined as GND in AdvancedMC Slots, but is connected to Power Modules as PWR_ON signals in MCH Slots.

¶ 61 An MCH that requires PWR right away can turn PWR on by connecting a 100 ohm resistor between MP and PWR_ON.

¶ 62 A Power Module detecting PWR_ON high will turn on PWR to that Slot, unless it has been directed to keep it off through IPMI or if PS1# is sensed high (Module not fully inserted).

¶ 63 In this way, no IPMI command is required from the MCMC to turn PWR on to its own Slot.

Figure A-22 PWR_ON interconnect

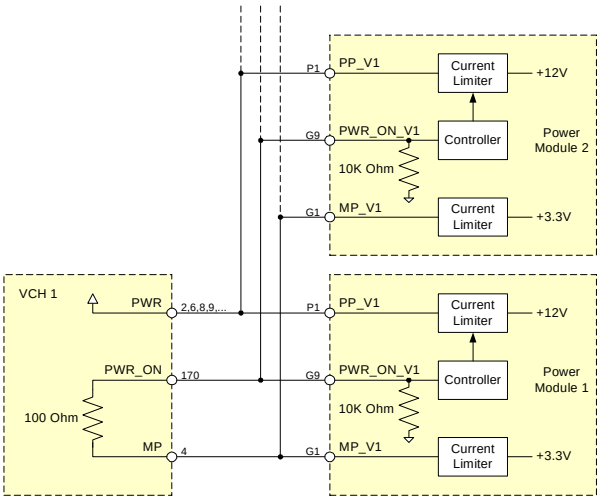

Property of CERN - For Internal Use Only – External Distribution Prohibited

¶ 64 Figure A-23 below shows that if an AdvancedMC Module is plugged into a MCH Slot, then PWR_ON signal on the Backplane gets shorted to GND by the AdvancedMC.

¶ 65 If the AdvancedMC does not implement pad 170, then the PWR_ON signal is pulled low on each Power Module anyway.

¶ 66 Since PWR_ON is sensed low by the Power Modules, the AdvancedMC does not get Payload Power right away. PWR has to be turned on by the MCHC on the other MCH Slot through an IPMI command to the Power Modules, just like it was any other AdvancedMC Slot.

Figure A-23 PWR_ON shorted to GND if AdvancedMC Module is plugged into MCH Slot

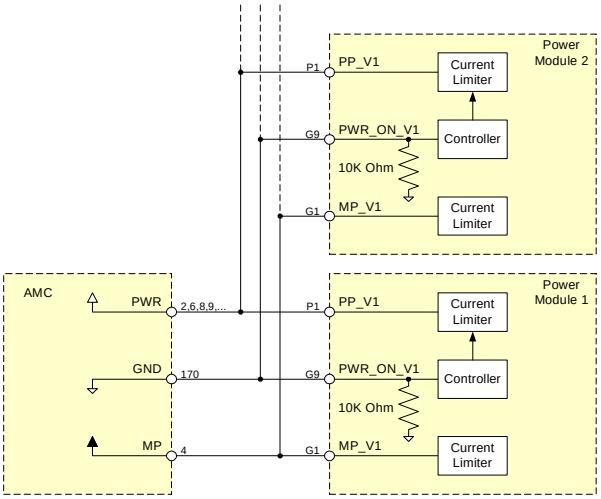

¶ 67 Figure A-24 below shows that if an MCH Module is plugged into an AdvancedMC Slot, then PWR_ON signal on the MCH Module gets shorted to GND by the Backplane. If the MCH pulls PWR_ON high to MP, it must do it through a 100 ohm resistor to limit the short-circuit current to less than 37 mA.

Figure A-24 PWR_ON shorted to GND if MCH Module is plugged into AdvancedMC Slot

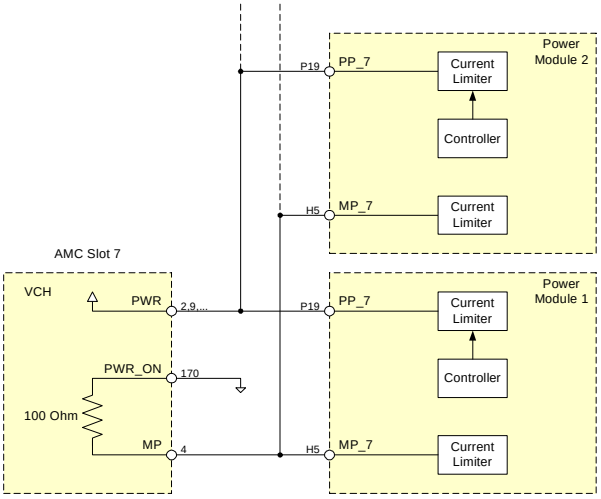

Property of CERN - For Internal Use Only – External Distribution Prohibited

¶ 68 Note that instead of pulling the PWR_ON signal high to MP, an MMC on the MCH could opt to drive such a line high through a series resistor, only if the MMC recognizes that the Slot it is plugged in is actually an MCH Slot. This is shown in Figure A-25 below. Doing so would allow the designer to spare valuable current for the MMC when the MCH is plugged into an AdvancedMC Slot, instead of wasting it in pure dissipation through the 100 ohm pull-up, which gets shorted to GND by the Backplane in an AdvancedMC Slot. An MMC is mentioned here, as it is expected that a MCHMC would otherwise consume too much power for MP.

Figure A-25 Using MMC to drive PWR_ON only when in an MCH Slot to save power on MP

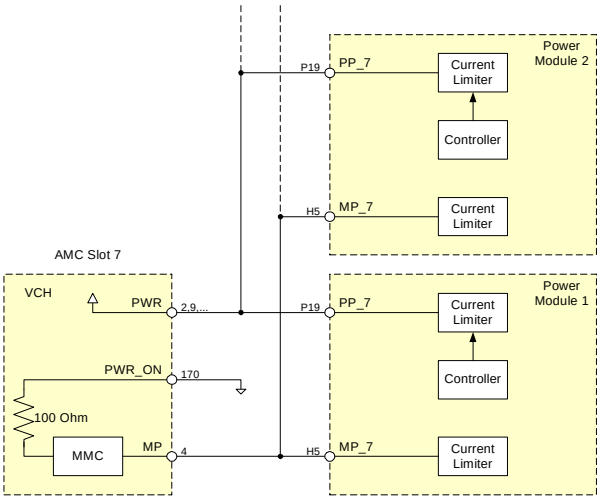

A.5.5 GA[2:0] pins at same locations

¶ 69 An MCH uses the same mechanism as an AdvancedMC to detect in which Slot it is plugged in. Three address lines are used, which are either connected to GND, to the Slot MP, or left unconnected on the Backplane.

¶ 70 As shown in Table A-3, there are 3^3=27 possibilities, twelve of which have been allocated to AdvancedMC Slots. The special cases GA[2:0]=GGG has already been reserved in AMC.0. The other two special cases, GA[2:0]=UUU and PPP, are reserved for MCH Slots. The remaining twelve codes are reserved for future use.

Property of CERN - For Internal Use Only – External Distribution Prohibited

Table A-3 GA[2:0] assignment

GA[2:0]	IPMB-L address	MicroTCA Carrier Local Address		Carrier Manager FRU Device ID
		Site Number	Site Type	
GGG	70h	N/A	N/A	N/A
GGU	72h	1	AdvancedMC (07h)	5
GUG	74h	2	AdvancedMC (07h)	6
GUU	76h	3	AdvancedMC (07h)	7
UGG	78h	4	AdvancedMC (07h)	8
UGU	7Ah	5	AdvancedMC (07h)	9
UUG	7Ch	6	AdvancedMC (07h)	10
UUP	7Eh	7	AdvancedMC (07h)	11
UPU	80h	8	AdvancedMC (07h)	12
UPP	82h	9	AdvancedMC (07h)	13
PUU	84h	10	AdvancedMC (07h)	14
PUP	86h	11	AdvancedMC (07h)	15
PPU	88h	12	AdvancedMC (07h)	16
GGP	8Ah	13	Reserved	17
GUP	8Ch	14	Reserved	18
GPG	8Eh	15	Reserved	19
GPU	90h	16	Reserved	20
GPP	92h	17	Reserved	21
UGP	94h	18	Reserved	22
UPG	96h	19	Reserved	23
PGG	98h	20	Reserved	24
PGU	9Ah	21	Reserved	25
PGP	9Ch	22	Reserved	26
PUG	9Eh	23	Reserved	27
PPG	A0h	24	Reserved	28
UUU	A2h	25	AdvancedMC (07h)	29
PPP	A4h	26	AdvancedMC (07h)	30

UUU	10h	1	MCH(0Ah)	2
PPP	12h	2	MCH(0Ah)	3

Property of CERN - For Internal Use Only – External Distribution Prohibited

¶ 71 Therefore, a Module can detect which type of Slot it is being plugged into by probing these GA[2:0] address lines.

Figure A-26 GA[2:0] pin assignments are identical between MCH and AdvancedMC

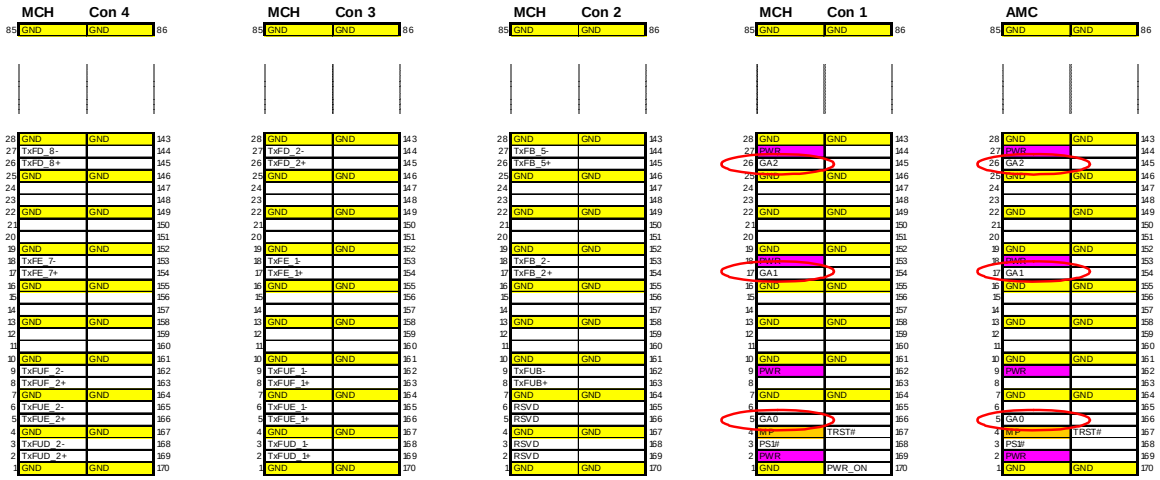

Property of CERN - For Internal Use Only – External Distribution Prohibited

¶ 72 Figure A-27 shows the case when Tongue 1 of a Module is inserted into a Connector 2, 3, or 4 of an MCH Slot. It turns out that the GA[2:0] lines will get bonded together through the ESD diodes and the series resistor of the MMC or MCMC and will keep pulling low.

Figure A-27 GA[2:0] lines keep pulling low

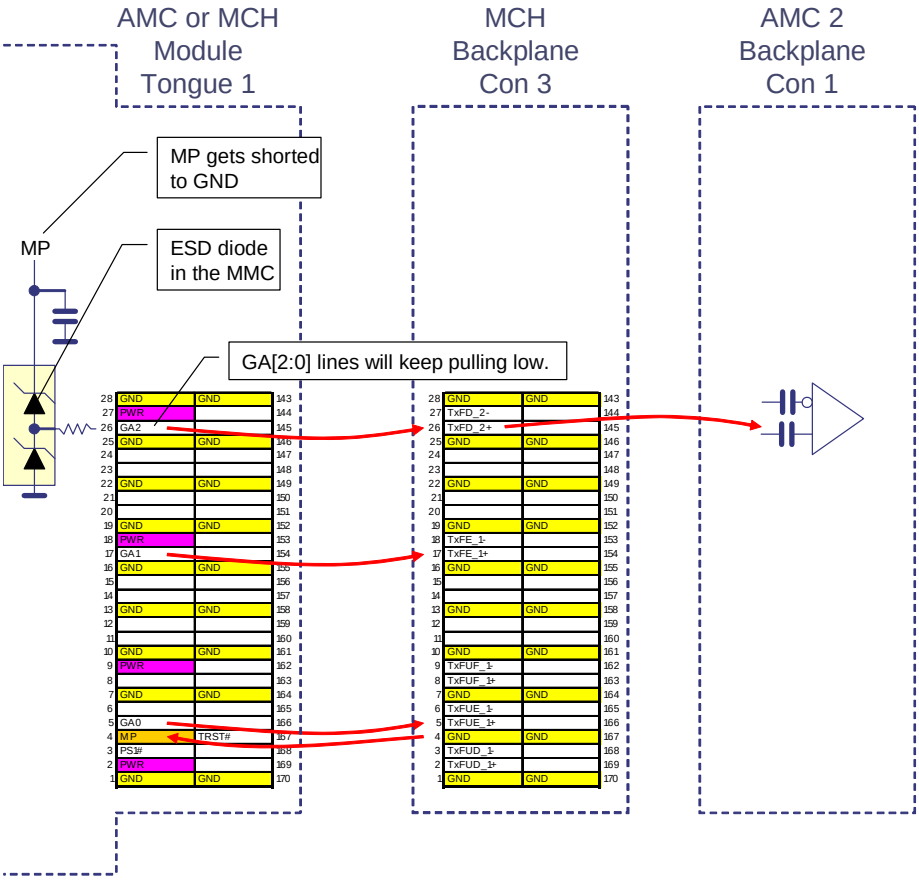

Property of CERN - For Internal Use Only – External Distribution Prohibited

A.5.6 ENABLE# pin at same location

¶ 73 The ENABLE# pin is kept at the same location. This signal is used in the same way for both MCHs and AdvancedMCs, as shown in Figure A-28. ENABLE# is driven by the Power Modules.

Figure A-28 ENABLE# pin assignment is identical between MCH and AdvancedMC

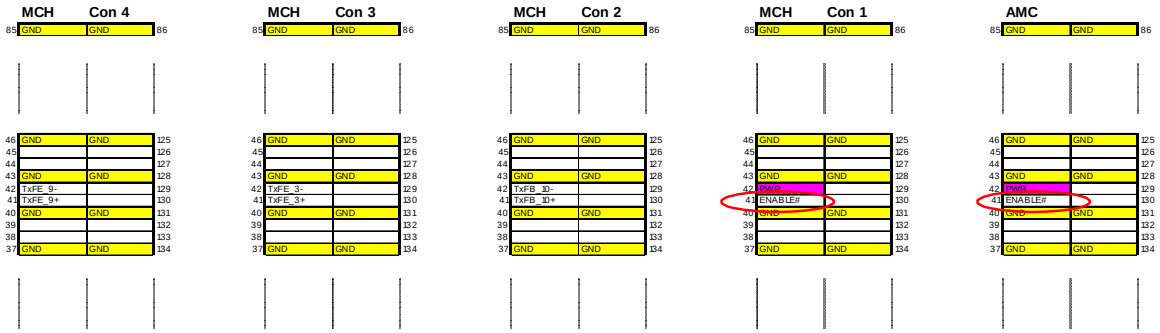

¶ 74 Figure A-29 shows the case when Tongue 1 of a Module is inserted into a Connector 2, 3, or 4 of an MCH Slot. This ENABLE# line may get bonded to GND through the ESD diodes of the input pin of the MMC or MCMC and will short the fabric line to GND through this diode.

Figure A-29 ENABLE# line will short the fabric line to GND

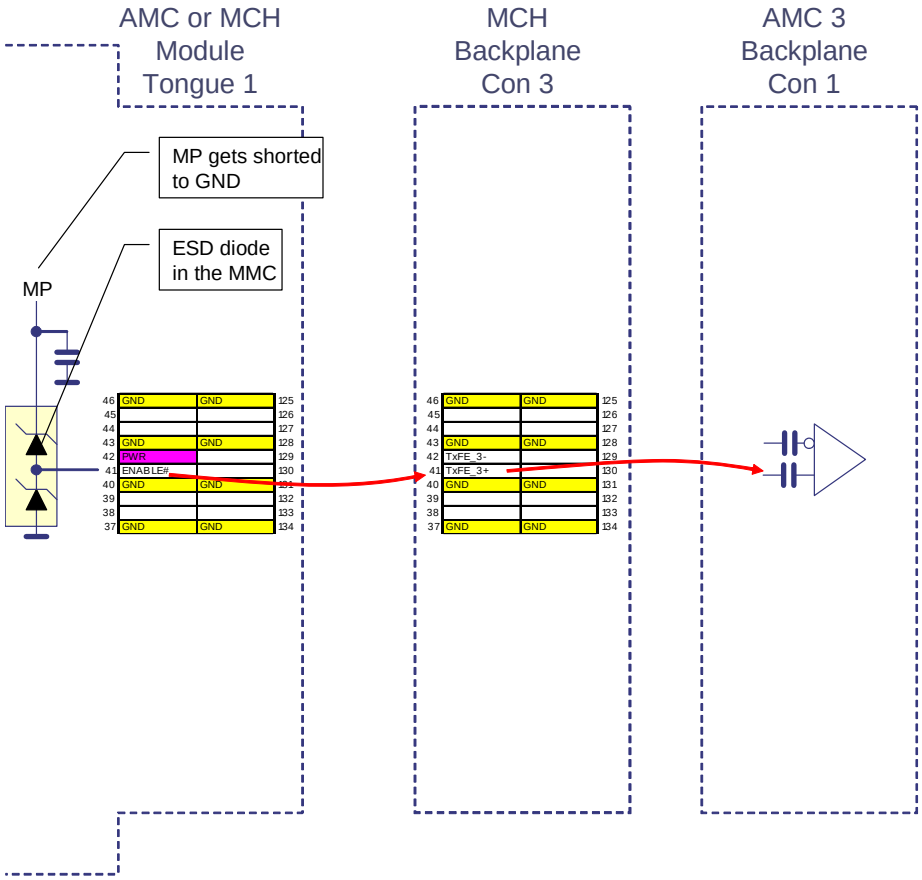

Property of CERN - For Internal Use Only – External Distribution Prohibited

Property of CERN - For Internal Use Only – External Distribution Prohibited

A.5.7 SDA_L and SCL_L pins

¶ 75 Figure A-30 shows how both IPMB-L signals defined for AdvancedMC Slots are kept at the same location on MCH Slots.

Figure A-30 SDA_L and SCL_L pins identical between MCH and AdvancedMC

	MCH	Con 4	
85	GND	GND	86
84	TxFG_12-		87
83	TxFG_12+		88
82	GND	GND	89
81			90
80			91
79	GND	GND	92
78			93
77			94
76	GND	GND	95
75			96
74			97
73	GND	GND	98
72	TxFG_11-		99
71	TxFG_11+		100
70	GND	GND	101
69			102
68			103
67	GND	GND	104
66			105
65			106
64	GND	GND	107
63			108
62			109
61	GND	GND	110
60			111
59			112
58	GND	GND	113
57	TxFF_10-		114
56	TxFF_10+		115
55	GND	GND	116

	MCH	Con 3	
85	GND	GND	86
84	TxFG_6-		87
83	TxFG_6+		88
82	GND	GND	89
81			90
80			91
79	GND	GND	92
78			93
77			94
76	GND	GND	95
75			96
74			97
73	GND	GND	98
72	TxFG_5-		99
71	TxFG_5+		100
70	GND	GND	101
69			102
68			103
67	GND	GND	104
66			105
65			106
64	GND	GND	107
63			108
62			109
61	GND	GND	110
60			111
59			112
58	GND	GND	113
57	TxFF_4-		114
56	TxFF_4+		115
55	GND	GND	116

	MCH	Con 2	
85	GND	GND	86
84	TxFC_12-		87
83	TxFC_12+		88
82	GND	GND	89
81			90
80			91
79	GND	GND	92
78			93
77			94
76	GND	GND	95
75			96
74			97
73	GND	GND	98
72	TxFC_8-		99
71	TxFC_8+		100
70	GND	GND	101
69			102
68			103
67	GND	GND	104
66			105
65			106
64	GND	GND	107
63			108
62			109
61	GND	GND	110
60			111
59			112
58	GND	GND	113
57	TxFC_3-		114
56	TxFC_3+		115
55	GND	GND	116

	MCH	Con 1	
85	GND	GND	86
84	PWR		87
83	PS0#		88
82	GND	GND	89
81			90
80			91
79	GND	GND	92
78			93
77			94
76	GND	GND	95
75			96
74			97
73	GND	GND	98
72	PWR		99
71	SDA_L		100
70	GND	GND	101
69			102
68			103
67	GND	GND	104
66			105
65			106
64	GND	GND	107
63			108
62			109
61	GND	GND	110
60			111
59			112
58	GND	GND	113
57	PWR		114
56	SCL_L		115
55	GND	GND	116

	AMC		
85	GND	GND	86
84	PWR		87
83	PS0#		88
82	GND	GND	89
81			90
80			91
79	GND	GND	92
78			93
77			94
76	GND	GND	95
75			96
74			97
73	GND	GND	98
72	PWR		99
71	SDA_L		100
70	GND	GND	101
69			102
68			103
67	GND	GND	104
66			105
65			106
64	GND	GND	107
63			108
62			109
61	GND	GND	110
60			111
59			112
58	GND	GND	113
57	PWR		114
56	SCL_L		115
55	GND	GND	116

Property of CERN - For Internal Use Only – External Distribution Prohibited

¶ 76 Figure A-31 below shows the case when Tongue 1 of a Module is inserted into a Connector 2, 3, or 4 of an MCH Slot. It turns out that the SDA_L and SCL_L lines will get bonded through the ESD diodes of the input pin of the MMC or MCMC and will short the fabric line to GND through this diode.

Figure A-31 SDA_L and SCL_L lines not driven

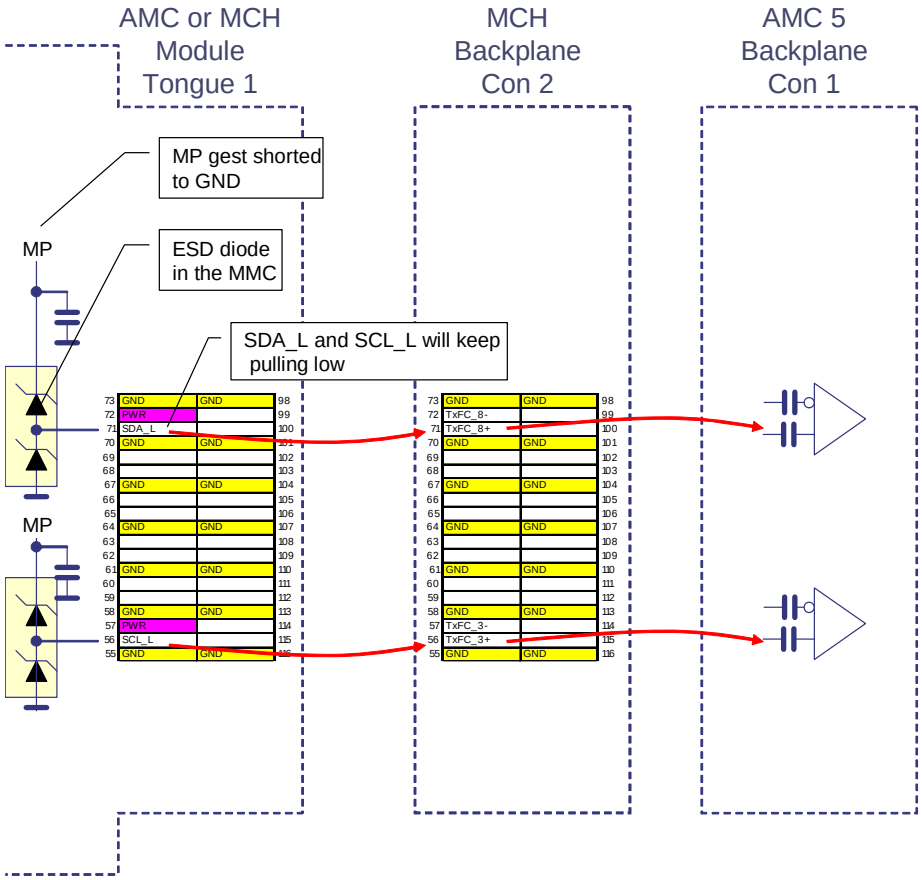

A.5.8 JTAG pins

¶ 77 The JTAG pins are kept at the same location. Equivalent pins on Connectors 2 are reserved, as shown in Figure A-32. However, equivalent pins on Connectors 3 and 4 are assigned to update fabric ports.

Figure A-32 JTAG pins identical between MCH and AdvancedMC

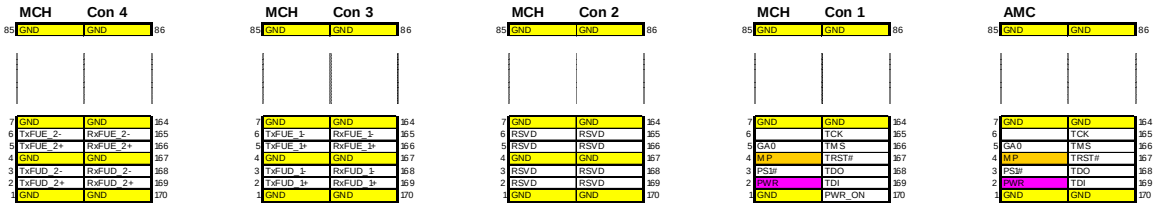

Property of CERN - For Internal Use Only – External Distribution Prohibited

A.5.9 Cross-over pins

¶ 78 The cross-over pins are placed at the equivalent location of the three clocks on AdvancedMC, as shown in Figure A-33.

¶ 79 The signal levels of these cross-over signals are M-LVDS to maintain compatibility with AMC.0. This allows a dual-mode MCH Module to use the pins as clock lines when plugged into an AdvancedMC Slot and use the pins as cross-over signals when plugged into an MCH Slot.

Figure A-33 MCH cross-over pins equivalent to AdvancedMC

	MCH	Con 4	
85	GND	GND	86
84	TxFG_12-		87
83	TxFG_12+		88
82	GND	GND	89
81	TxFF_12-		90
80	TxFF_12+		91
79	GND	GND	92
78	TxFE_12-		93
77	TxFE_12+		94
76	GND	GND	95
75	TxFD_12-		96
74	TxFD_12+		97
73	GND	GND	98
72	TxFG_11-		99
71	TxFG_11+		100
70	GND	GND	101

	MCH	Con 3	
85	GND	GND	86
84	TxFG_6-		87
83	TxFG_6+		88
82	GND	GND	89
81	TxFF_6-		90
80	TxFF_6+		91
79	GND	GND	92
78	TxFE_6-		93
77	TxFE_6+		94
76	GND	GND	95
75	TxFD_6-		96
74	TxFD_6+		97
73	GND	GND	98
72	TxFG_5-		99
71	TxFG_5+		100
70	GND	GND	101

	MCH	Con 2	
85	GND	GND	86
84	TxFC_12-		87
83	TxFC_12+		88
82	GND	GND	89
81	TxFC_11-		90
80	TxFC_11+		91
79	GND	GND	92
78	TxFC_10-		93
77	TxFC_10+		94
76	GND	GND	95
75	TxFC_9-		96
74	TxFC_9+		97
73	GND	GND	98
72	TxFC_8-		99
71	TxFC_8+		100
70	GND	GND	101

	MCH	Con 1	
85	GND	GND	86
84	PWR		87
83	PS0#		88
82	GND	GND	89
81	XOVER2-		90
80	XOVER2+		91
79	GND	GND	92
78	XOVER1-		93
77	XOVER1+		94
76	GND	GND	95
75	XOVER0-		96
74	XOVER0+		97
73	GND	GND	98
72	PWR		99
71	SDA_L		100
70	GND	GND	101

	AMC		
85	GND	GND	86
84	PWR		87
83	PS0#		88
82	GND	GND	89
81	CLK3-		90
80	CLK3+		91
79	GND	GND	92
78	CLK2_-		93
77	CLK2_+		94
76	GND	GND	95
75	CLK1-		96
74	CLK1+		97
73	GND	GND	98
72	PWR		99
71	SDA_L		100
70	GND	GND	101

A.5.10 TMREQ#, I2C_SDA, and I2C_SCL pins

¶ 80 The TMREQ#, I2C_SDA, and I2C_SCL pins are signals specific to the MCH and are not defined on an AdvancedMC Connector. These are non-LVDS and are required to be treated as such according to the AMC.0 specification (i.e. all these signals must remain tri-stated until E-Keying is resolved).

¶ 81 An MCH could potentially enable the driver of these lines with PWR, since PWR is only applied to an MCH if it is plugged into an MCH Slot.

¶ 82 When such MCH is plugged into an AdvancedMC Slot, E-Keying may not resolve, which would prevent the MCH from getting any PWR, thus keeping these drivers tri-stated.

Property of CERN - For Internal Use Only – External Distribution Prohibited

¶ 83 Figure A-34 below shows how TMREQ#, I2C_SDA, and I2C_SCL are located at the equivalent location of Port 15 of an AdvancedMC.

¶ 84 Figure A-35 below shows how an AdvancedMC could assert TMREQ#. It is therefore important to add connectivity from the PWR_ON pin to the JTAG Switch Module to take care of the case when an AdvancedMC is plugged into an MCH slot such that the JTAG Switch Module can distinguish between a valid TMREQ# and one that is driven off an LVDS driver of an AdvancedMC. Note that this implies that the TMREQ# pin is only valid when PWR_ON signal is asserted.

¶ 85 Figure A-37 below shows how isolators can be used to keep these signals isolated until E-Keying is resolved.

Figure A-34 TMREQ#, I2C_SDA, and I2C_SCL pins located at AdvancedMC Port 15

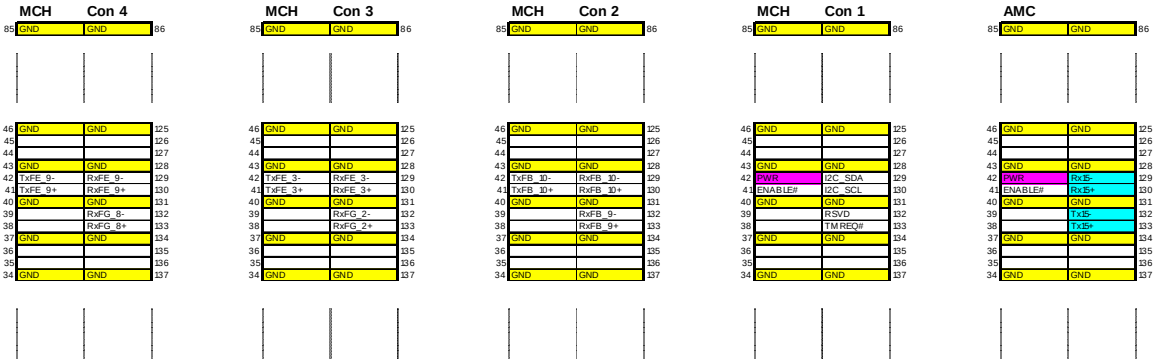

Property of CERN - For Internal Use Only – External Distribution Prohibited

Figure A-35 AdvancedMC Port 15 interference with TMREQ#

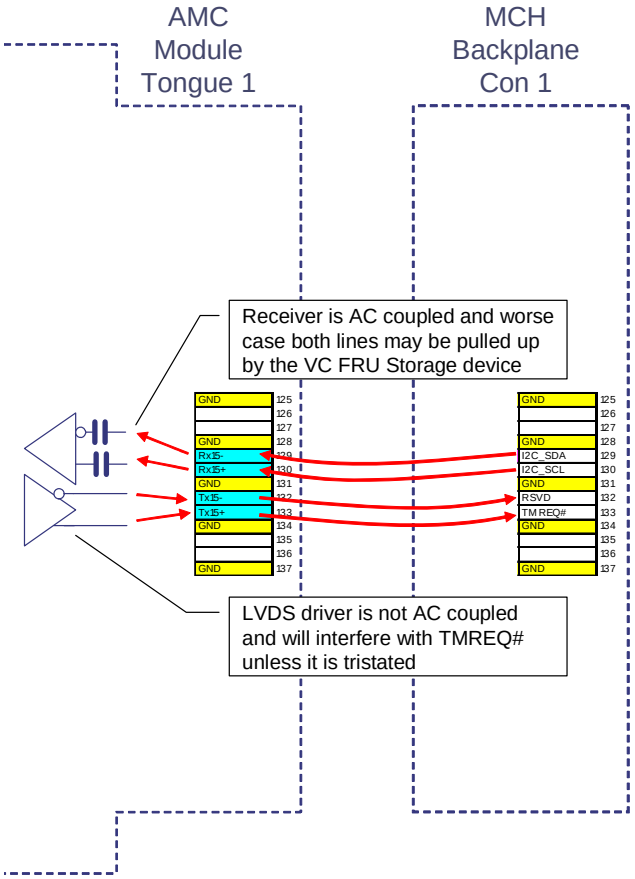

Property of CERN - For Internal Use Only – External Distribution Prohibited

Figure A-36 I2C_SDA and I2C_SCL interference

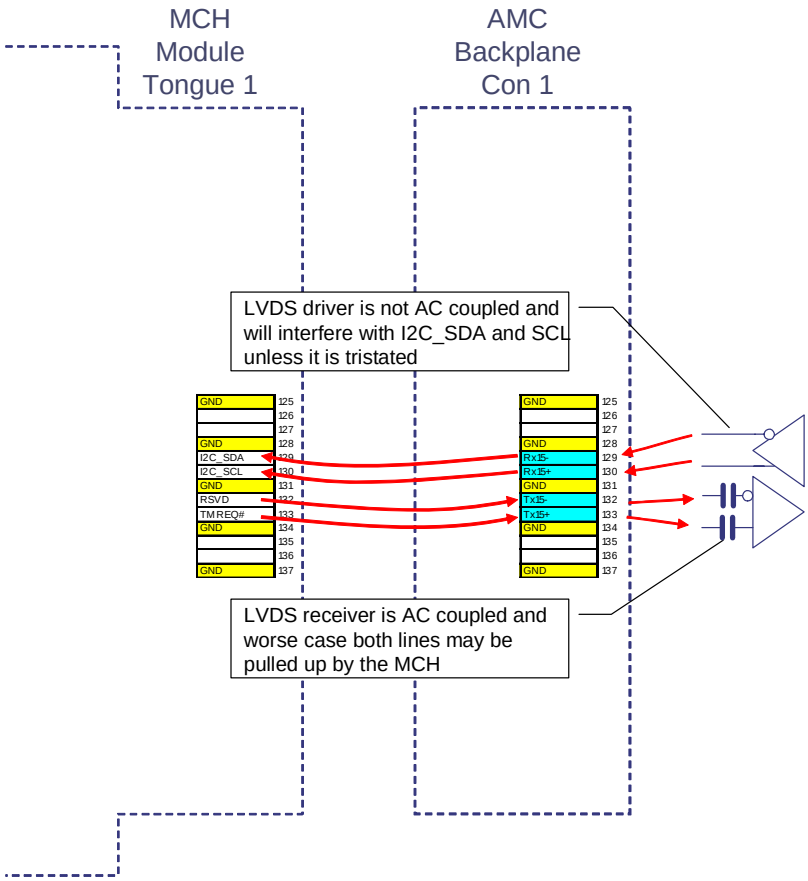

Figure A-37 Isolators keep signals tri-stated until E-Keying is resolved

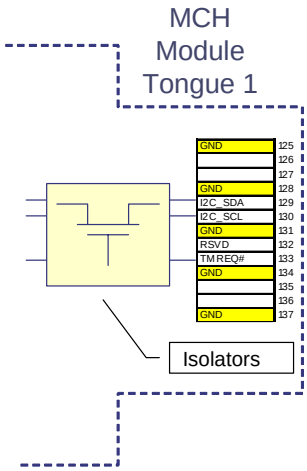

Property of CERN - For Internal Use Only – External Distribution Prohibited

Requirement list B

¶ 1 This appendix lists each requirement and its respective page number.

REQ 2.1 2-2
REQ 2.2 2-2
REQ 2.3 2-6
REQ 2.4 2-8
REQ 2.5 2-8
REQ 2.6 2-8
REQ 2.7 2-8
REQ 2.8 2-8
REQ 2.9 2-8
REQ 2.10 2-8
REQ 2.11 2-16
REQ 2.12 2-16
REQ 2.13 2-17
REQ 2.14 2-17
REQ 2.15 2-19
REQ 2.16 2-20
REQ 2.17 2-23
REQ 2.18 2-23
REQ 2.19 2-23
REQ 2.20 2-23
REQ 2.21 2-23
REQ 2.22 2-23
REQ 2.23 2-23
REQ 2.24 2-23
REQ 2.25 2-23
REQ 2.26 2-23
REQ 2.27 2-23
REQ 2.28 2-24
REQ 2.29 2-24
REQ 2.30 2-24
REQ 2.31 2-24
REQ 2.32 2-24
REQ 2.33 2-24
REQ 2.34 2-24
REQ 2.35 2-24
REQ 2.36 2-24
REQ 2.37 2-28
REQ 2.38 2-29
REQ 2.39 2-30
REQ 2.40 2-30
REQ 2.41 2-30
REQ 2.42 2-30
REQ 2.43 2-34
REQ 2.44 2-35
REQ 2.45 2-35
REQ 2.46 2-35
REQ 2.47 2-35
REQ 2.48 2-36
REQ 2.49 2-36
REQ 2.50 2-40
REQ 2.51 2-40
REQ 2.52 2-40
REQ 2.53 2-40
REQ 2.54 2-46
REQ 2.55 2-46
REQ 2.56 2-46
REQ 2.57 2-46
REQ 2.58 2-47
REQ 2.59 2-48
REQ 2.60 2-49
REQ 2.61 2-49
REQ 2.62 2-49
REQ 2.63 2-49
REQ 2.64 2-49
REQ 2.65 2-49
REQ 2.66 2-49
REQ 2.67 2-49
REQ 2.68 2-49
REQ 2.69 2-50
REQ 2.70 2-50
REQ 2.71 2-50
REQ 2.72 2-50
REQ 2.73 2-50
REQ 2.74 2-50
REQ 2.75 2-50
REQ 2.76 2-50
REQ 2.77 2-50
REQ 2.78 2-51

Property of CERN - For Internal Use Only – External Distribution Prohibited

REQ 2.79 ..... **2-51**
REQ 2.80 ..... **2-51**
REQ 2.81 ..... **2-51**
REQ 2.82 ..... **2-51**
REQ 2.83 ..... **2-51**
REQ 2.84 ..... **2-55**
REQ 2.85 ..... **2-55**
REQ 2.86 ..... **2-55**
REQ 2.87 ..... **2-55**
REQ 2.88 ..... **2-55**
REQ 2.89 ..... **2-55**
REQ 2.90 ..... **2-55**
REQ 2.91 ..... **2-57**
REQ 2.92 ..... **2-57**
REQ 2.93 ..... **2-57**
REQ 2.94 ..... **2-57**
REQ 2.95 ..... **2-57**
REQ 2.96 ..... **2-57**
REQ 2.97 ..... **2-57**
REQ 2.98 ..... **2-57**
REQ 2.99 ..... **2-57**
REQ 2.100 ..... **2-57**
REQ 2.101 ..... **2-62**
REQ 2.102 ..... **2-63**
REQ 2.103 ..... **2-63**
REQ 2.104 ..... **2-63**
REQ 2.105 ..... **2-64**
REQ 2.106 ..... **2-66**
REQ 2.107 ..... **2-66**
REQ 2.108 ..... **2-66**
REQ 2.109 ..... **2-66**
REQ 2.110 ..... **2-66**
REQ 2.111 ..... **2-66**
REQ 2.112 ..... **2-66**
REQ 2.113 ..... **2-66**
REQ 2.114 ..... **2-66**
REQ 2.115 ..... **2-66**
REQ 2.116 ..... **2-66**
REQ 2.117 ..... **2-66**
REQ 2.118 ..... **2-67**
REQ 2.119 ..... **2-67**
REQ 2.120 ..... **2-67**
REQ 2.121 ..... **2-68**
REQ 2.122 ..... **2-68**
REQ 2.123 ..... **2-68**
REQ 2.124 ..... **2-68**
REQ 2.125 ..... **2-68**
REQ 2.126 ..... **2-71**
REQ 2.127 ..... **2-71**
REQ 2.128 ..... **2-71**
REQ 2.129 ..... **2-71**
REQ 2.130 ..... **2-71**
REQ 2.131 ..... **2-71**
REQ 2.132 ..... **2-71**
REQ 2.133 ..... **2-71**
REQ 2.134 ..... **2-71**
REQ 2.135 ..... **2-71**
REQ 2.136 ..... **2-71**
REQ 2.137 ..... **2-71**
REQ 2.138 ..... **2-71**
REQ 2.139 ..... **2-71**
REQ 2.140 ..... **2-76**
REQ 2.141 ..... **2-78**
REQ 2.142 ..... **2-78**
REQ 2.143 ..... **2-78**
REQ 2.144 ..... **2-78**
REQ 2.145 ..... **2-80**
REQ 2.146 ..... **2-80**
REQ 2.147 ..... **2-82**
REQ 2.148 ..... **2-82**
REQ 2.149 ..... **2-82**
REQ 2.150 ..... **2-89**
REQ 2.151 ..... **2-89**
REQ 2.152 ..... **2-89**
REQ 2.153 ..... **2-89**
REQ 2.154 ..... **2-89**
REQ 2.155 ..... **2-89**
REQ 2.156 ..... **2-89**
REQ 2.157 ..... **2-90**
REQ 2.158 ..... **2-90**
REQ 2.159 ..... **2-90**
REQ 2.160 ..... **2-90**
REQ 2.161 ..... **2-90**
REQ 2.162 ..... **2-90**
REQ 2.163 ..... **2-90**
REQ 2.164 ..... **2-90**
REQ 2.165 ..... **2-90**
REQ 2.166 ..... **2-90**
REQ 2.167 ..... **2-91**
REQ 2.168 ..... **2-92**
REQ 2.169 ..... **2-92**
REQ 2.170 ..... **2-92**

Property of CERN - For Internal Use Only – External Distribution Prohibited

REQ 2.171 ..... **2-92**
REQ 2.172 ..... **2-93**
REQ 2.173 ..... **2-93**
REQ 2.174 ..... **2-93**
REQ 2.175 ..... **2-93**
REQ 2.176 ..... **2-93**
REQ 2.177 ..... **2-93**
REQ 2.178 ..... **2-93**
REQ 2.179 ..... **2-93**
REQ 2.180 ..... **2-93**
REQ 2.181 ..... **2-94**
REQ 2.182 ..... **2-94**
REQ 2.183 ..... **2-94**
REQ 2.184 ..... **2-94**
REQ 2.185 ..... **2-94**
REQ 2.186 ..... **2-94**
REQ 2.187 ..... **2-94**
REQ 2.188 ..... **2-94**
REQ 2.189 ..... **2-95**
REQ 2.190 ..... **2-95**
REQ 2.191 ..... **2-96**
REQ 2.192 ..... **2-96**
REQ 2.193 ..... **2-97**
REQ 2.194 ..... **2-97**
REQ 2.195 ..... **2-97**
REQ 2.196 ..... **2-97**
REQ 2.197 ..... **2-97**
REQ 2.198 ..... **2-97**
REQ 2.199 ..... **2-97**
REQ 3.1 ..... **3-10**
REQ 3.2 ..... **3-10**
REQ 3.3 ..... **3-10**
REQ 3.4 ..... **3-10**
REQ 3.5 ..... **3-10**
REQ 3.6 ..... **3-10**
REQ 3.7 ..... **3-10**
REQ 3.8 ..... **3-10**
REQ 3.9 ..... **3-10**
REQ 3.10 ..... **3-10**
REQ 3.11 ..... **3-10**
REQ 3.12 ..... **3-11**
REQ 3.13 ..... **3-11**
REQ 3.14 ..... **3-11**
REQ 3.15 ..... **3-11**
REQ 3.16 ..... **3-11**
REQ 3.17 ..... **3-11**
REQ 3.18 ..... **3-11**
REQ 3.19 ..... **3-12**
REQ 3.20 ..... **3-12**
REQ 3.21 ..... **3-13**
REQ 3.22 ..... **3-14**
REQ 3.23 ..... **3-14**
REQ 3.24 ..... **3-14**
REQ 3.25 ..... **3-14**
REQ 3.26 ..... **3-14**
REQ 3.27 ..... **3-14**
REQ 3.28 ..... **3-14**
REQ 3.29 ..... **3-14**
REQ 3.30 ..... **3-14**
REQ 3.31 ..... **3-14**
REQ 3.32 ..... **3-15**
REQ 3.33 ..... **3-16**
REQ 3.34 ..... **3-16**
REQ 3.35 ..... **3-16**
REQ 3.36 ..... **3-16**
REQ 3.37 ..... **3-16**
REQ 3.38 ..... **3-16**
REQ 3.39 ..... **3-16**
REQ 3.40 ..... **3-16**
REQ 3.41 ..... **3-16**
REQ 3.42 ..... **3-17**
REQ 3.43 ..... **3-17**
REQ 3.44 ..... **3-17**
REQ 3.45 ..... **3-17**
REQ 3.46 ..... **3-18**
REQ 3.47 ..... **3-18**
REQ 3.48 ..... **3-18**
REQ 3.49 ..... **3-18**
REQ 3.50 ..... **3-19**
REQ 3.51 ..... **3-19**
REQ 3.52 ..... **3-19**
REQ 3.53 ..... **3-19**
REQ 3.54 ..... **3-19**
REQ 3.55 ..... **3-19**
REQ 3.56 ..... **3-19**
REQ 3.57 ..... **3-19**
REQ 3.58 ..... **3-19**
REQ 3.59 ..... **3-19**
REQ 3.60 ..... **3-19**
REQ 3.61 ..... **3-19**
REQ 3.62 ..... **3-19**
REQ 3.63 ..... **3-19**

Property of CERN - For Internal Use Only – External Distribution Prohibited

REQ 3.64 ..... **3-20**
REQ 3.65 ..... **3-20**
REQ 3.66 ..... **3-20**
REQ 3.67 ..... **3-20**
REQ 3.68 ..... **3-20**
REQ 3.69 ..... **3-20**
REQ 3.70 ..... **3-20**
REQ 3.71 ..... **3-20**
REQ 3.72 ..... **3-20**
REQ 3.73 ..... **3-20**
REQ 3.74 ..... **3-20**
REQ 3.75 ..... **3-21**
REQ 3.76 ..... **3-21**
REQ 3.77 ..... **3-21**
REQ 3.78 ..... **3-21**
REQ 3.79 ..... **3-21**
REQ 3.80 ..... **3-21**
REQ 3.81 ..... **3-21**
REQ 3.82 ..... **3-21**
REQ 3.83 ..... **3-21**
REQ 3.84 ..... **3-21**
REQ 3.85 ..... **3-21**
REQ 3.86 ..... **3-21**
REQ 3.87 ..... **3-21**
REQ 3.88 ..... **3-21**
REQ 3.89 ..... **3-21**
REQ 3.90 ..... **3-21**
REQ 3.91 ..... **3-21**
REQ 3.92 ..... **3-21**
REQ 3.93 ..... **3-22**
REQ 3.94 ..... **3-22**
REQ 3.95 ..... **3-22**
REQ 3.96 ..... **3-22**
REQ 3.97 ..... **3-22**
REQ 3.98 ..... **3-22**
REQ 3.99 ..... **3-22**
REQ 3.100 ..... **3-24**
REQ 3.101 ..... **3-24**
REQ 3.102 ..... **3-24**
REQ 3.103 ..... **3-24**
REQ 3.104 ..... **3-24**
REQ 3.105 ..... **3-24**
REQ 3.106 ..... **3-24**
REQ 3.107 ..... **3-24**
REQ 3.108 ..... **3-25**
REQ 3.109 ..... **3-25**
REQ 3.110 ..... **3-25**
REQ 3.111 ..... **3-25**
REQ 3.112 ..... **3-25**
REQ 3.113 ..... **3-25**
REQ 3.114 ..... **3-25**
REQ 3.115 ..... **3-25**
REQ 3.116 ..... **3-25**
REQ 3.117 ..... **3-25**
REQ 3.118 ..... **3-27**
REQ 3.119 ..... **3-27**
REQ 3.120 ..... **3-27**
REQ 3.121 ..... **3-28**
REQ 3.122 ..... **3-28**
REQ 3.123 ..... **3-28**
REQ 3.124 ..... **3-28**
REQ 3.125 ..... **3-28**
REQ 3.126 ..... **3-28**
REQ 3.127 ..... **3-30**
REQ 3.128 ..... **3-30**
REQ 3.129 ..... **3-30**
REQ 3.130 ..... **3-30**
REQ 3.131 ..... **3-30**
REQ 3.132 ..... **3-30**
REQ 3.133 ..... **3-30**
REQ 3.134 ..... **3-30**
REQ 3.135 ..... **3-33**
REQ 3.136 ..... **3-33**
REQ 3.137 ..... **3-33**
REQ 3.138 ..... **3-33**
REQ 3.139 ..... **3-33**
REQ 3.140 ..... **3-33**
REQ 3.141 ..... **3-33**
REQ 3.142 ..... **3-33**
REQ 3.143 ..... **3-33**
REQ 3.144 ..... **3-33**
REQ 3.145 ..... **3-33**
REQ 3.146 ..... **3-35**
REQ 3.147 ..... **3-35**
REQ 3.148 ..... **3-35**
REQ 3.149 ..... **3-35**
REQ 3.150 ..... **3-35**
REQ 3.151 ..... **3-35**
REQ 3.152 ..... **3-35**
REQ 3.153 ..... **3-35**
REQ 3.154 ..... **3-35**
REQ 3.155 ..... **3-35**

Property of CERN - For Internal Use Only – External Distribution Prohibited

REQ 3.156 ..... **3-35**
REQ 3.157 ..... **3-35**
REQ 3.158 ..... **3-37**
REQ 3.159 ..... **3-37**
REQ 3.160 ..... **3-37**
REQ 3.161 ..... **3-37**
REQ 3.162 ..... **3-37**
REQ 3.163 ..... **3-38**
REQ 3.164 ..... **3-38**
REQ 3.165 ..... **3-38**
REQ 3.166 ..... **3-38**
REQ 3.167 ..... **3-38**
REQ 3.168 ..... **3-38**
REQ 3.169 ..... **3-38**
REQ 3.170 ..... **3-41**
REQ 3.171 ..... **3-41**
REQ 3.172 ..... **3-41**
REQ 3.173 ..... **3-41**
REQ 3.174 ..... **3-41**
REQ 3.175 ..... **3-41**
REQ 3.176 ..... **3-41**
REQ 3.177 ..... **3-41**
REQ 3.178 ..... **3-42**
REQ 3.179 ..... **3-42**
REQ 3.180 ..... **3-42**
REQ 3.181 ..... **3-42**
REQ 3.182 ..... **3-42**
REQ 3.183 ..... **3-42**
REQ 3.184 ..... **3-42**
REQ 3.185 ..... **3-42**
REQ 3.186 ..... **3-42**
REQ 3.187 ..... **3-42**
REQ 3.188 ..... **3-42**
REQ 3.189 ..... **3-42**
REQ 3.190 ..... **3-43**
REQ 3.191 ..... **3-43**
REQ 3.192 ..... **3-43**
REQ 3.193 ..... **3-43**
REQ 3.194 ..... **3-43**
REQ 3.195 ..... **3-43**
REQ 3.196 ..... **3-45**
REQ 3.197 ..... **3-45**
REQ 3.198 ..... **3-45**
REQ 3.199 ..... **3-45**
REQ 3.200 ..... **3-45**
REQ 3.201 ..... **3-45**
REQ 3.202 ..... **3-45**
REQ 3.203 ..... **3-45**
REQ 3.204 ..... **3-45**
REQ 3.205 ..... **3-45**
REQ 3.206 ..... **3-45**
REQ 3.207 ..... **3-46**
REQ 3.208 ..... **3-46**
REQ 3.209 ..... **3-46**
REQ 3.210 ..... **3-46**
REQ 3.211 ..... **3-46**
REQ 3.212 ..... **3-46**
REQ 3.213 ..... **3-46**
REQ 3.214 ..... **3-46**
REQ 3.215 ..... **3-46**
REQ 3.216 ..... **3-46**
REQ 3.217 ..... **3-46**
REQ 3.218 ..... **3-46**
REQ 3.219 ..... **3-46**
REQ 3.220 ..... **3-46**
REQ 3.221 ..... **3-46**
REQ 3.222 ..... **3-47**
REQ 3.223 ..... **3-47**
REQ 3.224 ..... **3-47**
REQ 3.225 ..... **3-47**
REQ 3.226 ..... **3-47**
REQ 3.227 ..... **3-47**
REQ 3.228 ..... **3-47**
REQ 3.229 ..... **3-47**
REQ 3.230 ..... **3-47**
REQ 3.231 ..... **3-47**
REQ 3.232 ..... **3-47**
REQ 3.233 ..... **3-47**
REQ 3.234 ..... **3-48**
REQ 3.235 ..... **3-50**
REQ 3.236 ..... **3-50**
REQ 3.237 ..... **3-50**
REQ 3.238 ..... **3-50**
REQ 3.239 ..... **3-50**
REQ 3.240 ..... **3-50**
REQ 3.241 ..... **3-50**
REQ 3.242 ..... **3-50**
REQ 3.243 ..... **3-51**
REQ 3.244 ..... **3-51**
REQ 3.245 ..... **3-52**
REQ 3.246 ..... **3-52**
REQ 3.247 ..... **3-52**

Property of CERN - For Internal Use Only – External Distribution Prohibited

REQ 3.248 3-54
REQ 3.249 3-54
REQ 3.250 3-54
REQ 3.251 3-54
REQ 3.252 3-55
REQ 3.253 3-55
REQ 3.254 3-55
REQ 3.255 3-55
REQ 3.256 3-55
REQ 3.257 3-55
REQ 3.258 3-55
REQ 3.259 3-55
REQ 3.260 3-55
REQ 3.261 3-55
REQ 3.262 3-55
REQ 3.263 3-56
REQ 3.264 3-56
REQ 3.265 3-56
REQ 3.266 3-56
REQ 3.267 3-57
REQ 3.268 3-57
REQ 3.269 3-57
REQ 3.270 3-57
REQ 3.271 3-57
REQ 3.272 3-57
REQ 3.273 3-57
REQ 3.274 3-59
REQ 3.275 3-59
REQ 3.276 3-59
REQ 3.277 3-59
REQ 3.278 3-59
REQ 3.279 3-59
REQ 3.280 3-59
REQ 3.281 3-59
REQ 3.282 3-59
REQ 3.283 3-59
REQ 3.284 3-66
REQ 3.285 3-66
REQ 3.286 3-66
REQ 3.287 3-66
REQ 3.288 3-66
REQ 3.289 3-67
REQ 3.290 3-67
REQ 3.291 3-67
REQ 3.292 3-67
REQ 3.293 3-67
REQ 3.294 3-67
REQ 3.295 3-67
REQ 3.296 3-67
REQ 3.297 3-67
REQ 3.298 3-67
REQ 3.299 3-67
REQ 3.300 3-67
REQ 3.301 3-67
REQ 3.302 3-67
REQ 3.303 3-67
REQ 3.304 3-67
REQ 3.305 3-68
REQ 3.306 3-69
REQ 3.307 3-69
REQ 3.308 3-69
REQ 3.309 3-69
REQ 3.310 3-69
REQ 3.311 3-69
REQ 3.312 3-69
REQ 3.313 3-69
REQ 3.314 3-69
REQ 3.315 3-69
REQ 3.316 3-70
REQ 3.317 3-70
REQ 3.318 3-70
REQ 3.319 3-70
REQ 3.320 3-70
REQ 3.321 3-70
REQ 3.322 3-72
REQ 3.323 3-72
REQ 3.324 3-72
REQ 3.325 3-72
REQ 3.326 3-72
REQ 3.327 3-72
REQ 3.328 3-72
REQ 3.329 3-72
REQ 3.330 3-72
REQ 3.331 3-73
REQ 3.332 3-73
REQ 3.333 3-73
REQ 3.334 3-73
REQ 3.335 3-73
REQ 3.336 3-73
REQ 3.337 3-73
REQ 3.338 3-74
REQ 3.339 3-74

Property of CERN - For Internal Use Only – External Distribution Prohibited

REQ 3.340 ..... **3-74**
REQ 3.341 ..... **3-74**
REQ 3.342 ..... **3-74**
REQ 3.343 ..... **3-74**
REQ 3.344 ..... **3-74**
REQ 3.345 ..... **3-74**
REQ 3.346 ..... **3-74**
REQ 3.347 ..... **3-74**
REQ 3.348 ..... **3-77**
REQ 3.349 ..... **3-77**
REQ 3.350 ..... **3-77**
REQ 3.351 ..... **3-77**
REQ 3.352 ..... **3-77**
REQ 3.353 ..... **3-77**
REQ 3.354 ..... **3-77**
REQ 3.355 ..... **3-78**
REQ 3.356 ..... **3-78**
REQ 3.357 ..... **3-78**
REQ 3.358 ..... **3-78**
REQ 3.359 ..... **3-79**
REQ 3.360 ..... **3-79**
REQ 3.361 ..... **3-79**
REQ 3.362 ..... **3-79**
REQ 3.363 ..... **3-79**
REQ 3.364 ..... **3-85**
REQ 3.365 ..... **3-85**
REQ 3.366 ..... **3-85**
REQ 3.367 ..... **3-86**
REQ 3.368 ..... **3-86**
REQ 3.369 ..... **3-86**
REQ 3.370 ..... **3-86**
REQ 3.371 ..... **3-86**
REQ 3.372 ..... **3-86**
REQ 3.373 ..... **3-86**
REQ 3.374 ..... **3-86**
REQ 3.375 ..... **3-86**
REQ 3.376 ..... **3-86**
REQ 3.377 ..... **3-86**
REQ 3.378 ..... **3-87**
REQ 3.379 ..... **3-87**
REQ 3.380 ..... **3-87**
REQ 3.381 ..... **3-87**
REQ 3.382 ..... **3-87**
REQ 3.383 ..... **3-87**
REQ 3.384 ..... **3-87**
REQ 3.385 ..... **3-88**
REQ 3.386 ..... **3-88**
REQ 3.387 ..... **3-88**
REQ 3.388 ..... **3-88**
REQ 3.389 ..... **3-88**
REQ 3.390 ..... **3-88**
REQ 3.391 ..... **3-88**
REQ 3.392 ..... **3-88**
REQ 3.393 ..... **3-88**
REQ 3.394 ..... **3-88**
REQ 3.395 ..... **3-88**
REQ 3.396 ..... **3-88**
REQ 3.397 ..... **3-88**
REQ 3.398 ..... **3-89**
REQ 3.399 ..... **3-89**
REQ 3.400 ..... **3-89**
REQ 3.401 ..... **3-89**
REQ 3.402 ..... **3-89**
REQ 3.403 ..... **3-89**
REQ 3.404 ..... **3-89**
REQ 3.405 ..... **3-89**
REQ 3.406 ..... **3-89**
REQ 3.407 ..... **3-89**
REQ 3.408 ..... **3-90**
REQ 3.409 ..... **3-90**
REQ 3.410 ..... **3-90**
REQ 3.411 ..... **3-90**
REQ 3.412 ..... **3-90**
REQ 3.413 ..... **3-90**
REQ 3.414 ..... **3-90**
REQ 3.415 ..... **3-90**
REQ 3.416 ..... **3-90**
REQ 3.417 ..... **3-90**
REQ 3.418 ..... **3-90**
REQ 3.419 ..... **3-91**
REQ 3.420 ..... **3-91**
REQ 3.421 ..... **3-91**
REQ 3.422 ..... **3-91**
REQ 3.423 ..... **3-91**
REQ 3.424 ..... **3-91**
REQ 3.425 ..... **3-91**
REQ 3.426 ..... **3-91**
REQ 3.427 ..... **3-91**
REQ 3.428 ..... **3-91**
REQ 3.429 ..... **3-91**
REQ 3.430 ..... **3-91**
REQ 3.431 ..... **3-91**

Property of CERN - For Internal Use Only – External Distribution Prohibited

REQ 3.432 ..... **3-92**
REQ 3.433 ..... **3-92**
REQ 3.434 ..... **3-92**
REQ 3.435 ..... **3-92**
REQ 3.436 ..... **3-92**
REQ 3.437 ..... **3-92**
REQ 3.438 ..... **3-92**
REQ 3.439 ..... **3-92**
REQ 3.440 ..... **3-92**
REQ 3.441 ..... **3-93**
REQ 3.442 ..... **3-93**
REQ 3.443 ..... **3-93**
REQ 3.444 ..... **3-93**
REQ 3.445 ..... **3-93**
REQ 3.446 ..... **3-93**
REQ 3.447 ..... **3-93**
REQ 3.448 ..... **3-93**
REQ 3.449 ..... **3-93**
REQ 3.450 ..... **3-93**
REQ 3.451 ..... **3-93**
REQ 3.452 ..... **3-93**
REQ 3.453 ..... **3-93**
REQ 3.454 ..... **3-94**
REQ 3.455 ..... **3-94**
REQ 3.456 ..... **3-94**
REQ 3.457 ..... **3-94**
REQ 3.458 ..... **3-95**
REQ 3.459 ..... **3-95**
REQ 3.460 ..... **3-95**
REQ 3.461 ..... **3-95**
REQ 3.462 ..... **3-95**
REQ 3.463 ..... **3-95**
REQ 3.464 ..... **3-95**
REQ 3.465 ..... **3-95**
REQ 3.466 ..... **3-95**
REQ 3.467 ..... **3-95**
REQ 3.468 ..... **3-95**
REQ 4.1 ..... **4-2**
REQ 4.2 ..... **4-2**
REQ 4.3 ..... **4-3**
REQ 4.4 ..... **4-3**
REQ 4.5 ..... **4-3**
REQ 4.6 ..... **4-3**
REQ 4.7 ..... **4-3**
REQ 4.8 ..... **4-3**
REQ 4.9 ..... **4-3**
REQ 4.10 ..... **4-3**
REQ 4.11 ..... **4-3**
REQ 4.12 ..... **4-4**
REQ 4.13 ..... **4-4**
REQ 4.14 ..... **4-6**
REQ 4.15 ..... **4-6**
REQ 4.16 ..... **4-6**
REQ 4.17 ..... **4-6**
REQ 4.18 ..... **4-6**
REQ 4.19 ..... **4-6**
REQ 4.20 ..... **4-6**
REQ 4.21 ..... **4-6**
REQ 4.22 ..... **4-6**
REQ 4.23 ..... **4-6**
REQ 4.24 ..... **4-6**
REQ 4.25 ..... **4-6**
REQ 4.26 ..... **4-6**
REQ 4.27 ..... **4-6**
REQ 4.28 ..... **4-7**
REQ 4.29 ..... **4-7**
REQ 4.30 ..... **4-7**
REQ 4.31 ..... **4-7**
REQ 4.32 ..... **4-7**
REQ 4.33 ..... **4-7**
REQ 4.34 ..... **4-7**
REQ 4.35 ..... **4-7**
REQ 4.36 ..... **4-7**
REQ 4.37 ..... **4-8**
REQ 4.38 ..... **4-8**
REQ 4.39 ..... **4-8**
REQ 4.40 ..... **4-8**
REQ 4.41 ..... **4-9**
REQ 4.42 ..... **4-9**
REQ 4.43 ..... **4-9**
REQ 4.44 ..... **4-9**
REQ 4.45 ..... **4-9**
REQ 4.46 ..... **4-9**
REQ 4.47 ..... **4-9**
REQ 4.48 ..... **4-9**
REQ 4.49 ..... **4-9**
REQ 4.50 ..... **4-9**
REQ 4.51 ..... **4-9**
REQ 4.52 ..... **4-10**
REQ 4.53 ..... **4-10**
REQ 4.54 ..... **4-10**
REQ 4.55 ..... **4-10**

Property of CERN - For Internal Use Only – External Distribution Prohibited

REQ 4.56 ..... **4-10**
REQ 4.57 ..... **4-10**
REQ 4.58 ..... **4-10**
REQ 4.59 ..... **4-10**
REQ 4.60 ..... **4-10**
REQ 4.61 ..... **4-11**
REQ 4.62 ..... **4-11**
REQ 4.63 ..... **4-11**
REQ 4.64 ..... **4-11**
REQ 4.65 ..... **4-11**
REQ 4.66 ..... **4-11**
REQ 4.67 ..... **4-11**
REQ 4.68 ..... **4-11**
REQ 4.69 ..... **4-12**
REQ 4.70 ..... **4-12**
REQ 4.71 ..... **4-12**
REQ 4.72 ..... **4-12**
REQ 4.73 ..... **4-12**
REQ 4.74 ..... **4-12**
REQ 4.75 ..... **4-12**
REQ 4.76 ..... **4-12**
REQ 4.77 ..... **4-12**
REQ 4.78 ..... **4-12**
REQ 4.79 ..... **4-12**
REQ 4.80 ..... **4-13**
REQ 4.81 ..... **4-13**
REQ 4.82 ..... **4-13**
REQ 4.83 ..... **4-13**
REQ 4.84 ..... **4-13**
REQ 4.85 ..... **4-20**
REQ 4.86 ..... **4-20**
REQ 4.87 ..... **4-20**
REQ 4.88 ..... **4-20**
REQ 4.89 ..... **4-20**
REQ 4.90 ..... **4-21**
REQ 4.91 ..... **4-21**
REQ 4.92 ..... **4-21**
REQ 4.93 ..... **4-21**
REQ 4.94 ..... **4-22**
REQ 4.95 ..... **4-22**
REQ 4.96 ..... **4-22**
REQ 4.97 ..... **4-22**
REQ 4.98 ..... **4-22**
REQ 4.99 ..... **4-22**
REQ 4.100 ..... **4-22**
REQ 4.101 ..... **4-22**
REQ 4.102 ..... **4-22**
REQ 4.103 ..... **4-22**
REQ 4.104 ..... **4-22**
REQ 4.105 ..... **4-22**
REQ 4.106 ..... **4-23**
REQ 4.107 ..... **4-23**
REQ 4.108 ..... **4-23**
REQ 4.109 ..... **4-23**
REQ 4.110 ..... **4-23**
REQ 4.111 ..... **4-23**
REQ 4.112 ..... **4-23**
REQ 4.113 ..... **4-23**
REQ 4.114 ..... **4-23**
REQ 4.115 ..... **4-23**
REQ 4.116 ..... **4-24**
REQ 4.117 ..... **4-24**
REQ 4.118 ..... **4-24**
REQ 4.119 ..... **4-24**
REQ 4.120 ..... **4-25**
REQ 4.121 ..... **4-25**
REQ 4.122 ..... **4-25**
REQ 4.123 ..... **4-25**
REQ 4.124 ..... **4-25**
REQ 4.125 ..... **4-25**
REQ 4.126 ..... **4-26**
REQ 4.127 ..... **4-26**
REQ 4.128 ..... **4-26**
REQ 4.129 ..... **4-26**
REQ 4.130 ..... **4-26**
REQ 4.131 ..... **4-26**
REQ 4.132 ..... **4-26**
REQ 4.133 ..... **4-26**
REQ 4.134 ..... **4-26**
REQ 4.135 ..... **4-27**
REQ 4.136 ..... **4-27**
REQ 4.137 ..... **4-27**
REQ 4.138 ..... **4-27**
REQ 4.139 ..... **4-27**
REQ 4.140 ..... **4-27**
REQ 4.141 ..... **4-28**
REQ 4.142 ..... **4-28**
REQ 4.143 ..... **4-28**
REQ 4.144 ..... **4-28**
REQ 4.145 ..... **4-29**
REQ 4.146 ..... **4-29**
REQ 4.147 ..... **4-29**

Property of CERN - For Internal Use Only – External Distribution Prohibited

REQ 4.148 ..... **4-29**
REQ 4.149 ..... **4-29**
REQ 4.150 ..... **4-29**
REQ 4.151 ..... **4-30**
REQ 4.152 ..... **4-30**
REQ 4.153 ..... **4-30**
REQ 4.154 ..... **4-30**
REQ 4.155 ..... **4-30**
REQ 4.156 ..... **4-30**
REQ 4.157 ..... **4-31**
REQ 4.158 ..... **4-31**
REQ 4.159 ..... **4-31**
REQ 4.160 ..... **4-31**
REQ 4.161 ..... **4-31**
REQ 4.162 ..... **4-31**
REQ 4.163 ..... **4-31**
REQ 4.164 ..... **4-31**
REQ 4.165 ..... **4-31**
REQ 4.166 ..... **4-32**
REQ 4.167 ..... **4-32**
REQ 4.168 ..... **4-32**
REQ 4.169 ..... **4-32**
REQ 4.170 ..... **4-32**
REQ 4.171 ..... **4-33**
REQ 4.172 ..... **4-33**
REQ 4.173 ..... **4-33**
REQ 4.174 ..... **4-34**
REQ 4.175 ..... **4-34**
REQ 4.176 ..... **4-34**
REQ 4.177 ..... **4-34**
REQ 4.178 ..... **4-34**
REQ 4.179 ..... **4-34**
REQ 4.180 ..... **4-34**
REQ 4.181 ..... **4-34**
REQ 4.182 ..... **4-35**
REQ 4.183 ..... **4-35**
REQ 4.184 ..... **4-35**
REQ 4.185 ..... **4-35**
REQ 4.186 ..... **4-35**
REQ 4.187 ..... **4-35**
REQ 4.188 ..... **4-35**
REQ 4.189 ..... **4-35**
REQ 4.190 ..... **4-36**
REQ 4.191 ..... **4-36**
REQ 4.192 ..... **4-37**
REQ 4.193 ..... **4-37**
REQ 4.194 ..... **4-38**
REQ 4.195 ..... **4-38**
REQ 4.196 ..... **4-38**
REQ 4.197 ..... **4-38**
REQ 4.198 ..... **4-38**
REQ 4.199 ..... **4-39**
REQ 4.200 ..... **4-39**
REQ 4.201 ..... **4-39**
REQ 4.202 ..... **4-39**
REQ 4.203 ..... **4-39**
REQ 4.204 ..... **4-39**
REQ 4.205 ..... **4-40**
REQ 4.206 ..... **4-40**
REQ 4.207 ..... **4-41**
REQ 4.208 ..... **4-41**
REQ 4.209 ..... **4-41**
REQ 4.210 ..... **4-41**
REQ 4.211 ..... **4-41**
REQ 4.212 ..... **4-41**
REQ 4.213 ..... **4-41**
REQ 4.214 ..... **4-42**
REQ 4.215 ..... **4-42**
REQ 4.216 ..... **4-42**
REQ 4.217 ..... **4-42**
REQ 4.218 ..... **4-42**
REQ 4.219 ..... **4-42**
REQ 4.220 ..... **4-43**
REQ 4.221 ..... **4-43**
REQ 4.222 ..... **4-43**
REQ 4.223 ..... **4-43**
REQ 4.224 ..... **4-43**
REQ 4.225 ..... **4-43**
REQ 4.226 ..... **4-44**
REQ 4.227 ..... **4-44**
REQ 4.228 ..... **4-45**
REQ 4.229 ..... **4-45**
REQ 4.230 ..... **4-45**
REQ 4.231 ..... **4-45**
REQ 4.232 ..... **4-46**
REQ 4.233 ..... **4-46**
REQ 4.234 ..... **4-48**
REQ 4.235 ..... **4-49**
REQ 4.236 ..... **4-49**
REQ 4.237 ..... **4-50**
REQ 4.238 ..... **4-50**
REQ 4.239 ..... **4-50**

Property of CERN - For Internal Use Only – External Distribution Prohibited

REQ 4.240 ..... **4-51**
REQ 4.241 ..... **4-51**
REQ 4.242 ..... **4-52**
REQ 4.243 ..... **4-52**
REQ 4.244 ..... **4-53**
REQ 4.245 ..... **4-53**
REQ 4.246 ..... **4-54**
REQ 4.247 ..... **4-54**
REQ 4.248 ..... **4-55**
REQ 4.249 ..... **4-55**
REQ 4.250 ..... **4-55**
REQ 4.251 ..... **4-56**
REQ 4.252 ..... **4-56**
REQ 4.253 ..... **4-57**
REQ 4.254 ..... **4-57**
REQ 4.255 ..... **4-57**
REQ 4.256 ..... **4-57**
REQ 4.257 ..... **4-58**
REQ 4.258 ..... **4-59**
REQ 4.259 ..... **4-59**
REQ 4.260 ..... **4-59**
REQ 4.261 ..... **4-59**
REQ 5.1 ..... **5-1**
REQ 5.2 ..... **5-2**
REQ 5.3 ..... **5-2**
REQ 5.4 ..... **5-2**
REQ 5.5 ..... **5-2**
REQ 5.6 ..... **5-3**
REQ 5.7 ..... **5-4**
REQ 5.8 ..... **5-4**
REQ 5.9 ..... **5-4**
REQ 5.10 ..... **5-5**
REQ 5.11 ..... **5-6**
REQ 5.12 ..... **5-6**
REQ 5.13 ..... **5-6**
REQ 5.14 ..... **5-6**
REQ 5.15 ..... **5-7**
REQ 5.16 ..... **5-8**
REQ 5.17 ..... **5-8**
REQ 5.18 ..... **5-8**
REQ 5.19 ..... **5-8**
REQ 5.20 ..... **5-8**
REQ 5.21 ..... **5-8**
REQ 5.22 ..... **5-9**
REQ 5.23 ..... **5-9**
REQ 5.24 ..... **5-9**
REQ 5.25 ..... **5-10**
REQ 5.26 ..... **5-10**
REQ 5.27 ..... **5-11**
REQ 5.28 ..... **5-12**
REQ 5.29 ..... **5-12**
REQ 5.30 ..... **5-14**
REQ 5.31 ..... **5-14**
REQ 5.32 ..... **5-14**
REQ 5.33 ..... **5-14**
REQ 5.34 ..... **5-14**
REQ 5.35 ..... **5-14**
REQ 6.36 ..... **6-2**
REQ 6.37 ..... **6-2**
REQ 6.38 ..... **6-2**
REQ 6.39 ..... **6-2**
REQ 6.40 ..... **6-2**
REQ 6.41 ..... **6-2**
REQ 6.42 ..... **6-2**
REQ 6.43 ..... **6-2**
REQ 6.44 ..... **6-2**
REQ 6.45 ..... **6-2**
REQ 6.46 ..... **6-2**
REQ 6.47 ..... **6-2**
REQ 6.48 ..... **6-3**
REQ 6.49 ..... **6-3**
REQ 6.50 ..... **6-3**
REQ 6.51 ..... **6-3**
REQ 6.52 ..... **6-3**
REQ 6.53 ..... **6-3**
REQ 6.54 ..... **6-3**
REQ 6.55 ..... **6-4**
REQ 6.56 ..... **6-5**
REQ 6.57 ..... **6-5**
REQ 6.58 ..... **6-5**
REQ 6.59 ..... **6-5**
REQ 6.60 ..... **6-5**
REQ 6.61 ..... **6-5**
REQ 6.62 ..... **6-5**
REQ 6.63 ..... **6-6**
REQ 6.64 ..... **6-6**
REQ 6.65 ..... **6-6**
REQ 6.66 ..... **6-6**
REQ 6.67 ..... **6-6**
REQ 6.68 ..... **6-7**
REQ 6.69 ..... **6-9**
REQ 6.70 ..... **6-9**

Property of CERN - For Internal Use Only – External Distribution Prohibited

REQ 6.71 6-9
REQ 6.72 6-9
REQ 6.73 6-11
REQ 6.74 6-12
REQ 6.75 6-12
REQ 6.76 6-12
REQ 6.77 6-12
REQ 6.78 6-13
REQ 6.79 6-13
REQ 6.80 6-14
REQ 6.81 6-14
REQ 6.82 6-14
REQ 6.83 6-14
REQ 6.84 6-14
REQ 6.85 6-14
REQ 6.86 6-14
REQ 6.87 6-17
REQ 6.88 6-17
REQ 6.89 6-17
REQ 6.90 6-18
REQ 6.91 6-18
REQ 6.92 6-18
REQ 6.93 6-18
REQ 6.94 6-18
REQ 6.95 6-18
REQ 6.96 6-18
REQ 6.97 6-19
REQ 6.98 6-19
REQ 6.99 6-19
REQ 6.100 6-19
REQ 6.101 6-19
REQ 6.102 6-19
REQ 6.103 6-21
REQ 6.104 6-21
REQ 6.105 6-21
REQ 6.106 6-21
REQ 6.107 6-21
REQ 6.108 6-22
REQ 6.109 6-22
REQ 6.110 6-22
REQ 6.111 6-22
REQ 6.112 6-22
REQ 6.113 6-22
REQ 6.114 6-22
REQ 6.115 6-22
REQ 6.116 6-22
REQ 6.117 6-22
REQ 6.118 6-23
REQ 6.119 6-23
REQ 6.120 6-23
REQ 6.121 6-23
REQ 6.122 6-23
REQ 6.123 6-23
REQ 6.124 6-23
REQ 6.125 6-23
REQ 6.126 6-24
REQ 6.127 6-24
REQ 6.128 6-24
REQ 6.129 6-24
REQ 6.130 6-24
REQ 6.131 6-24
REQ 6.132 6-24
REQ 6.133 6-24
REQ 6.134 6-24
REQ 6.135 6-24
REQ 6.136 6-24
REQ 6.137 6-25
REQ 6.138 6-25
REQ 6.139 6-25
REQ 6.140 6-25
REQ 6.141 6-25
REQ 6.142 6-25
REQ 6.143 6-25
REQ 6.144 6-25
REQ 6.145 6-25
REQ 6.146 6-26
REQ 6.147 6-26
REQ 6.148 6-26
REQ 6.149 6-26
REQ 6.150 6-26
REQ 6.151 6-26
REQ 6.152 6-26
REQ 6.153 6-26
REQ 6.154 6-26
REQ 6.155 6-26
REQ 6.156 6-26
REQ 6.157 6-26
REQ 6.158 6-26
REQ 6.159 6-27
REQ 6.160 6-27
REQ 6.161 6-27
REQ 6.162 6-27

Property of CERN - For Internal Use Only – External Distribution Prohibited

REQ 6.163 ..... **6-27**
REQ 6.164 ..... **6-27**
REQ 6.165 ..... **6-27**
REQ 6.166 ..... **6-27**
REQ 6.167 ..... **6-27**
REQ 6.168 ..... **6-27**
REQ 6.169 ..... **6-27**
REQ 6.170 ..... **6-27**
REQ 6.171 ..... **6-30**
REQ 6.172 ..... **6-31**
REQ 6.173 ..... **6-31**
REQ 7.1 ..... **7-1**
REQ 7.2 ..... **7-1**
REQ 7.3 ..... **7-1**
REQ 7.4 ..... **7-2**
REQ 7.5 ..... **7-2**
REQ 7.6 ..... **7-3**
REQ 7.7 ..... **7-3**
REQ 7.8 ..... **7-3**
REQ 7.9 ..... **7-4**
REQ 7.10 ..... **7-4**
REQ 7.11 ..... **7-4**
REQ 7.12 ..... **7-4**
REQ 7.13 ..... **7-5**
REQ 7.14 ..... **7-5**
REQ 7.15 ..... **7-5**
REQ 7.16 ..... **7-6**
REQ 7.17 ..... **7-6**
REQ 7.18 ..... **7-6**
REQ 7.19 ..... **7-7**
REQ 7.20 ..... **7-8**
REQ 7.21 ..... **7-10**
REQ 7.22 ..... **7-10**
REQ 7.23 ..... **7-10**
REQ 7.24 ..... **7-10**
REQ 7.25 ..... **7-11**
REQ 7.26 ..... **7-12**
REQ 7.27 ..... **7-12**
REQ 7.28 ..... **7-12**
REQ 7.29 ..... **7-12**
REQ 7.30 ..... **7-12**
REQ 7.31 ..... **7-12**
REQ 7.32 ..... **7-12**
REQ 7.33 ..... **7-13**
REQ 7.34 ..... **7-13**
REQ 7.35 ..... **7-13**
REQ 7.36 ..... **7-13**
REQ 7.37 ..... **7-13**
REQ 7.38 ..... **7-14**
REQ 7.39 ..... **7-14**
REQ 7.40 ..... **7-14**
REQ 7.41 ..... **7-15**
REQ 7.42 ..... **7-15**
REQ 7.43 ..... **7-16**
REQ 7.44 ..... **7-16**
REQ 7.45 ..... **7-17**
REQ 7.46 ..... **7-17**
REQ 7.47 ..... **7-17**
REQ 7.48 ..... **7-17**
REQ 7.49 ..... **7-17**
REQ 7.50 ..... **7-18**
REQ 7.51 ..... **7-18**
REQ 7.52 ..... **7-18**
REQ 7.53 ..... **7-18**
REQ 7.54 ..... **7-18**
REQ 7.55 ..... **7-18**
REQ 7.56 ..... **7-19**
REQ 7.57 ..... **7-19**
REQ 7.58 ..... **7-20**
REQ 7.59 ..... **7-20**
REQ 7.60 ..... **7-22**
REQ 7.61 ..... **7-22**
REQ 7.62 ..... **7-23**
REQ 7.63 ..... **7-23**
REQ 7.64 ..... **7-23**
REQ 7.65 ..... **7-24**
REQ 7.66 ..... **7-24**
REQ 7.67 ..... **7-24**
REQ 7.68 ..... **7-24**
REQ 7.69 ..... **7-24**
REQ 7.70 ..... **7-24**
REQ 7.71 ..... **7-24**
REQ 7.72 ..... **7-25**
REQ 7.73 ..... **7-25**
REQ 7.74 ..... **7-25**
REQ 7.75 ..... **7-25**
REQ 7.76 ..... **7-25**
REQ 7.77 ..... **7-25**
REQ 7.78 ..... **7-25**
REQ 7.79 ..... **7-26**
REQ 7.80 ..... **7-26**
REQ 7.81 ..... **7-27**

Property of CERN - For Internal Use Only – External Distribution Prohibited

REQ 7.82 7-27
REQ 7.83 7-27
REQ 7.84 7-27
REQ 7.85 7-27
REQ 7.86 7-28
REQ 7.87 7-28
REQ 7.88 7-28
REQ 7.89 7-28
REQ 7.90 7-29
REQ 7.91 7-29
REQ 7.92 7-29
REQ 7.93 7-29
REQ 7.94 7-29
REQ 7.95 7-29
REQ 7.96 7-29
REQ 7.97 7-29
REQ 7.98 7-30
REQ 7.99 7-30
REQ 7.100 7-30
REQ 7.101 7-30
REQ 7.102 7-31
REQ 7.103 7-31
REQ 7.104 7-31
REQ 7.105 7-32
REQ 7.106 7-32
REQ 7.107 7-34
REQ 7.108 7-34
REQ 7.109 7-35
REQ 7.110 7-35
REQ 7.111 7-36
REQ 7.112 7-36
REQ 7.113 7-36
REQ 7.114 7-37
REQ 7.115 7-37
REQ 7.116 7-37
REQ 7.117 7-37
REQ 7.118 7-38
REQ 7.119 7-38
REQ 7.120 7-38
REQ 7.121 7-38
REQ 7.122 7-39
REQ 7.123 7-39
REQ 7.124 7-39
REQ 7.125 7-39
REQ 7.126 7-39
REQ 7.127 7-40
REQ 7.128 7-40
REQ 7.129 7-41
REQ 7.130 7-41
REQ 7.131 7-41
REQ 7.132 7-41
REQ 7.133 7-41
REQ 7.134 7-41
REQ 7.135 7-43
REQ 7.136 7-43
REQ 7.137 7-44
REQ 7.138 7-44
REQ 7.139 7-45
REQ 7.140 7-45
REQ 7.141 7-46
REQ 7.142 7-46
REQ 7.143 7-46
REQ 7.144 7-47
REQ 7.145 7-48
REQ 7.146 7-49
REQ 7.147 7-49
REQ 7.148 7-49
REQ 7.149 7-49
REQ 7.150 7-50
REQ 7.151 7-50
REQ 7.152 7-50
REQ 7.153 7-51
REQ 7.154 7-51
REQ 7.155 7-51
REQ 7.156 7-51
REQ 7.157 7-51
REQ 7.158 7-52
REQ 7.159 7-52
REQ 7.160 7-52
REQ 7.161 7-53
REQ 7.162 7-53
REQ 7.163 7-53
REQ 7.164 7-53
REQ 7.165 7-64
REQ 7.166 7-64
REQ 7.167 7-64
REQ 7.168 7-65
REQ 7.169 7-65
REQ 7.170 7-65
REQ 7.171 7-65
REQ 8.1 8-1
REQ 8.2 8-1

Property of CERN - For Internal Use Only – External Distribution Prohibited

REQ 8.3 ..... **8-2**
REQ 8.4 ..... **8-2**
REQ 8.5 ..... **8-2**
REQ 8.6 ..... **8-2**
REQ 8.7 ..... **8-2**
REQ 8.8 ..... **8-3**
REQ 8.9 ..... **8-3**
REQ 8.10 ..... **8-3**
REQ 8.11 ..... **8-3**
REQ 8.12 ..... **8-4**
REQ 8.13 ..... **8-4**
REQ 8.14 ..... **8-5**
REQ 8.15 ..... **8-5**
REQ 8.16 ..... **8-5**
REQ 8.17 ..... **8-6**
REQ 8.18 ..... **8-6**
REQ 8.19 ..... **8-6**
REQ 8.20 ..... **8-7**
REQ 8.21 ..... **8-8**
REQ 8.22 ..... **8-8**
REQ 8.23 ..... **8-8**
REQ 8.24 ..... **8-8**
REQ 8.25 ..... **8-8**
REQ 8.26 ..... **8-9**
REQ 8.27 ..... **8-9**

Property of CERN - For Internal Use Only – External Distribution Prohibited