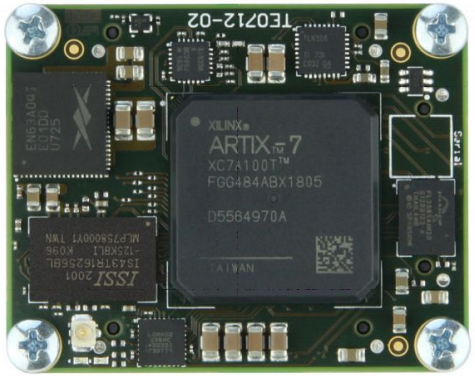

Regarding the usage of our schematics and alike documentation for Trenz module TE0712.

Project is protected under copyright and we strongly and strictly prohibit the reverse engineering or recreation, even if the design is just adapted or modified. TE0712 is protected under such right and in case of plagiarism we will have to do anything necessary in order to protect our assets.

Schematics and other handouts serve for informational purposes only!

trenz electronic	Title:		
A4	Number: TE0712 42I36-A		Rev. 03
Date: *	Copyright: Trenz Electronic GmbH / TT		Page 1 of 20
	Filename: Legal Notices Modules.SchDoc		

REV	Description	
-01	Initial revision	
-02		
-03	1. Added Legal notices, project overview and revision changes. Updated page count and page order. 2. Added a D3 diode between the INIT and PROG_B signals to keep the FPGA in the reset state while PROG_B is low during the initial power-up. 3. Resistors R2 , R68 replaced by 2K2 (were 4K87) to improve I2C stability at higher baud rates. 4. Replaced obsolete ferrite beads BKP0603HS121-T to MPZ0603S121HT000. 5. Revised power supply circuit. Replaced obsolete components: - EN63A0QI - MP8869SGL-Z (U14); - EP53F8QI - MPM3834CGPA (U6 , U16). 6. Replaced Q1 power switch TPS27082LDDCR by MP5077GG-Z. 7. Added power monitors U10 , U11 STM6710LWB6F. U3.25 3.3V signal replaced by PG_ALL, generated by U10 , U11 power 8. U14 I2C interface connected to bus PLL_SDA / PLL_SCL U1B . Added table with device addresses on the I2C bus. A new device will be detected during a bus scan 9. Capacitors C177 ,	VY

trenz electronic	Title: Revision History		
A4	Number: TE0712 42I36-A		Rev. 03
Date: 2019-10-02	Copyright: Trenz Electronic GmbH		Page 2 of 20
Drawn by: VY	Filename: Revision Changes.SchDoc		

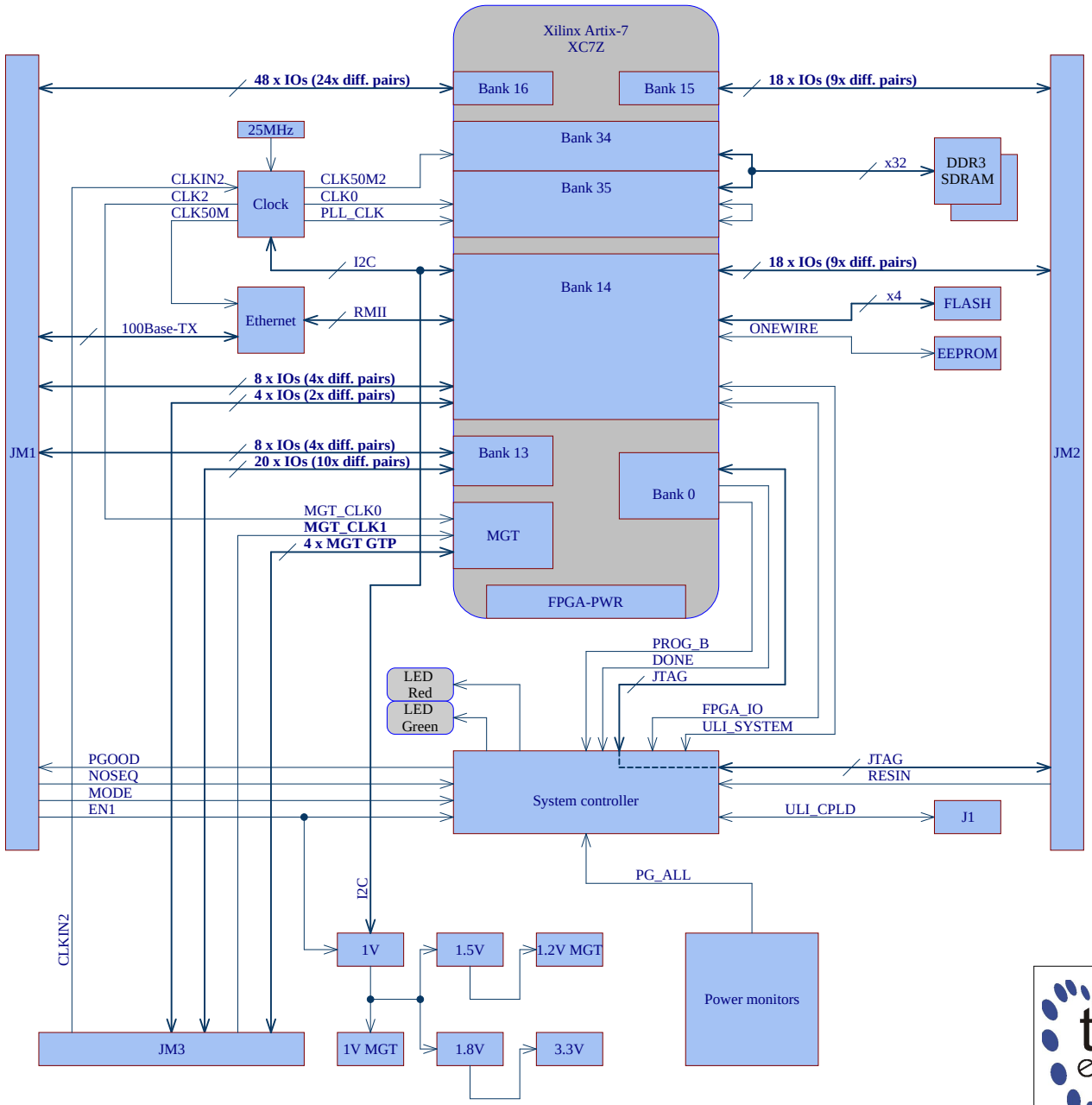

U_Revision Changes

U_TE0712

U_Power_Diagram

trenz electronic	Title: System Overview		
A4	Number: TE0712 42I36-A		Rev. 03
Date:	Copyright: Trenz Electronic GmbH		Page 3 of 20
	Filename: Overview.SchDoc		

Power-on sequencing:

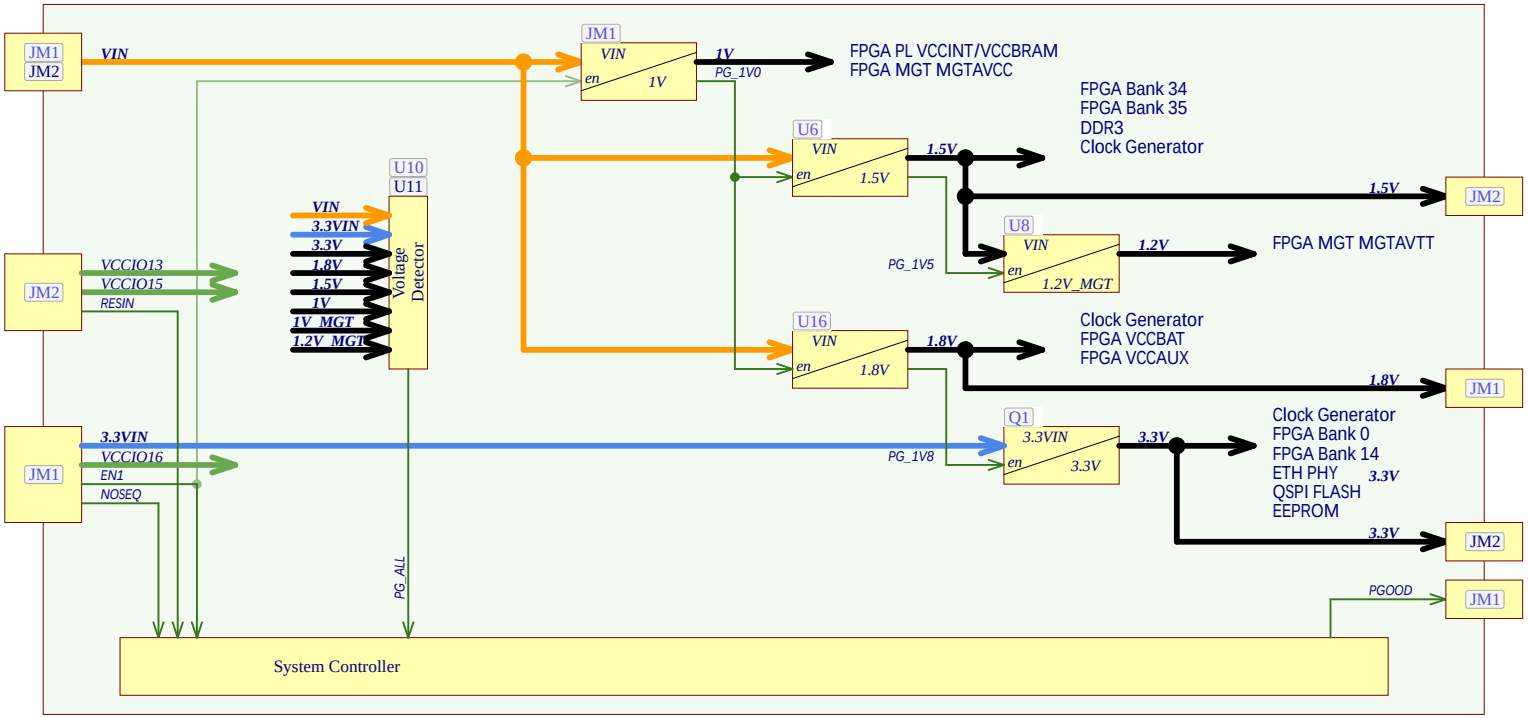

Recommended Operating Conditions

Power Rail	Direction	Range	Tolerance	Description	Note
VIN	IN	3.3 - 5V	+/-5%	Micromodule Power	Mandatory
3.3VIN	IN	3.3V	+/-5%	Micromodule Power	Mandatory
VCCIO13	IN	1.2 - 3.3V	+/-5%	HR IO Bank13	-
VCCIO14	IN	3.3V	+/-5%	HR IO Bank14	Fixed
VCCIO15	IN	1.2 - 3.3V	+/-5%	HR IO Bank15	-
VCCIO16	IN	1.2 - 3.3V	+/-5%	HR IO Bank16	-
1.5V	OUT	1.5V	+/-5%	For Carrier card Periphery	-
1.8V	OUT	1.8V	+/-5%	For Carrier card Periphery	-
3.3V	OUT	3.3V	+/-5%	For Carrier card Periphery	-
VREF_JTAG	OUT	3.3V	+/-5%	For Carrier card Periphery	Connected to 3.3V

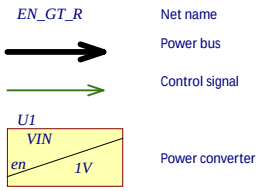

trenz electronic	Title:		
A4	Number: 42I36-A		Rev. 03
Date: 27.10.2022	Copyright:		Page of
Filename: Power_Diagram.SchDoc			

Special notes:

.

.

FIDU-DOT - mini FIDU-DOT - mini

PM1 PM2

FIDU-DOT - mini FIDU-DOT - mini

PM3 PM4

FIDU-DOT - mini FIDU-DOT - mini

PM5 PM6

Mount.Hole 3.2mm Mount.Hole 3.2mm

GND GND

Mount.Hole 3.2mm Mount.Hole 3.2mm

GND GND

Top of Board

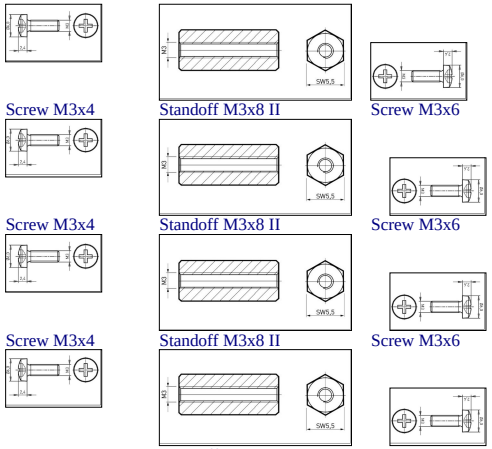

Serial

Serial

Serialnumber 6,3 x 6.3mm

Serial1

TE Address Overlay

LOGO ADDRESS

Assembly variant	42I36-A
Created by	MR
Modified by	MR
Modified at	2021-02-16
SVN Revision	14001

trenz electronic

Title:	TE0712		
A4	Number: TE0712 42I36-A		Rev. 03
Date: 2015-12-09	Copyright: Trenz Electronic GmbH		Page5 of 20
Filename:	TE0712.SchDoc		

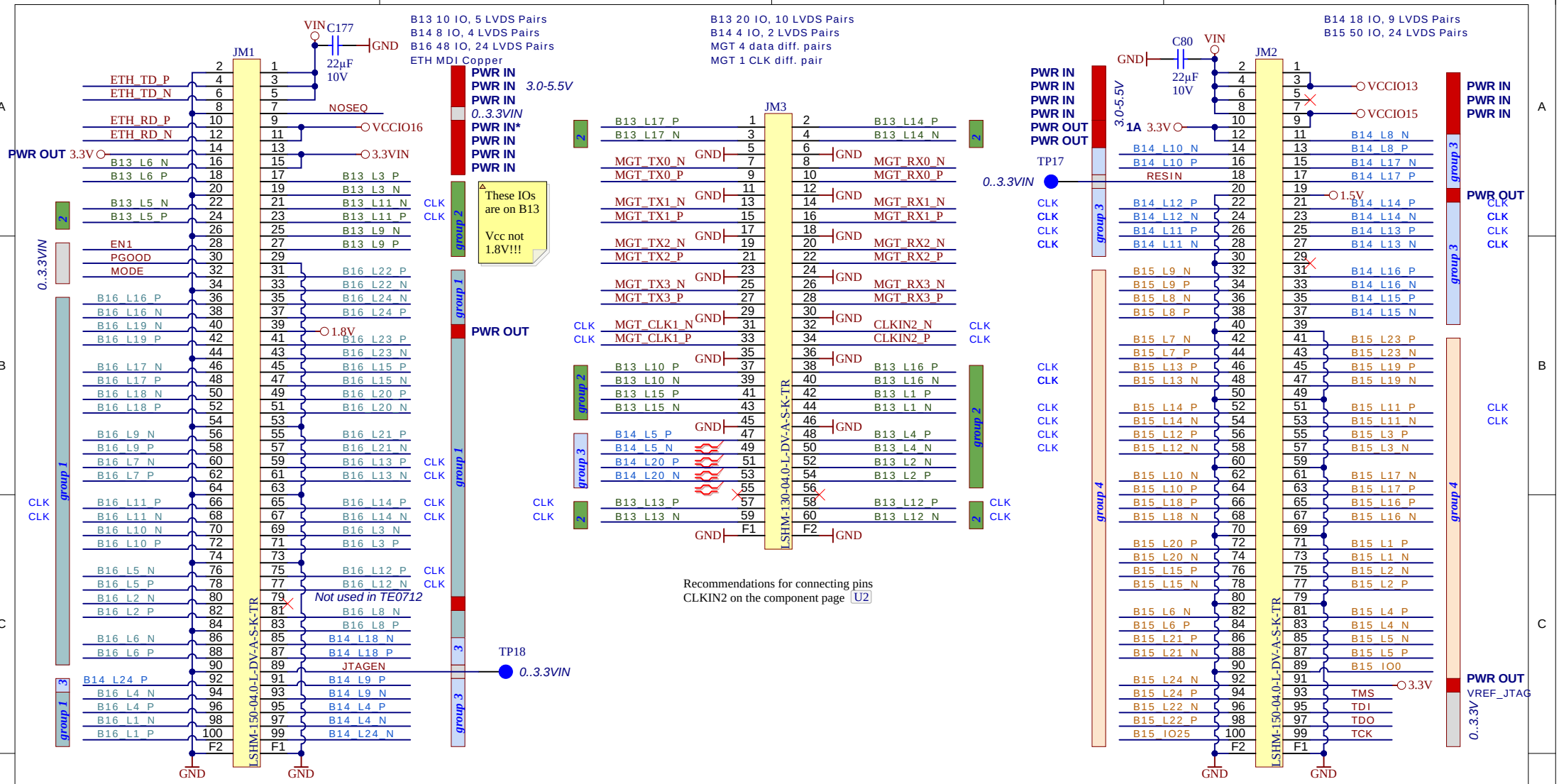
JM1
JM2
JM3
LSHM-150-04.0-L-DV-A-S-K-TR
LSHM-130-04.0-L-DV-A-S-K-TR
VIN
C177
22µF
10V
GND
C80
B13 10 IO, 5 LVDS Pairs
B14 8 IO, 4 LVDS Pairs
B16 48 IO, 24 LVDS Pairs
ETH MDI Copper
B13 20 IO, 10 LVDS Pairs
B14 4 IO, 2 LVDS Pairs
MGT 4 data diff. pairs
MGT 1 CLK diff. pair
B14 18 IO, 9 LVDS Pairs
B15 50 IO, 24 LVDS Pairs
PWR IN
PWR IN 3.0-5.5V
PWR IN
0..3.3VIN
PWR IN*
PWR IN
PWR IN
PWR IN
PWR OUT
PWR OUT
PWR OUT 3.3V
0..3.3VIN
ETH_TD_P
ETH_TD_N
ETH_RD_P
ETH_RD_N
NOSEQ
VCCIO16
3.3VIN
EN1
PGOOD
MODE
1.8V
JTAGEN
TP18
0..3.3VIN
Not used in TE0712
These IOs are on B13
Vcc not 1.8V!!!
MGT_TX0_N
MGT_TX0_P
MGT_TX1_N
MGT_TX1_P
MGT_TX2_N
MGT_TX2_P
MGT_TX3_N
MGT_TX3_P
MGT_CLK1_N
MGT_CLK1_P
MGT_RX0_N
MGT_RX0_P
MGT_RX1_N
MGT_RX1_P
MGT_RX2_N
MGT_RX2_P
MGT_RX3_N
MGT_RX3_P
CLKIN2_N
CLKIN2_P
Recommendations for connecting pins
CLKIN2 on the component page U2
TP17
0..3.3VIN
1A 3.3V
VCCIO13
VCCIO15
RESIN
1.5V
TMS
TDI
TDO
TCK
3.3V
VREF_JTAG
0..3.3V
PWR OUT 3.3V - 1A
PWR OUT 1.8V - 1A
PWR OUT 1.5V - 1A
TP19
TP20
TP21
TP22
trenz electronic
Title: B2B
A4
Number: TE0712 42I36-A
Rev. 03
Date: 2015-12-09
Copyright: Trenz Electronic GmbH
Page6 of 20
Filename: B2B-Connectors.SchDoc

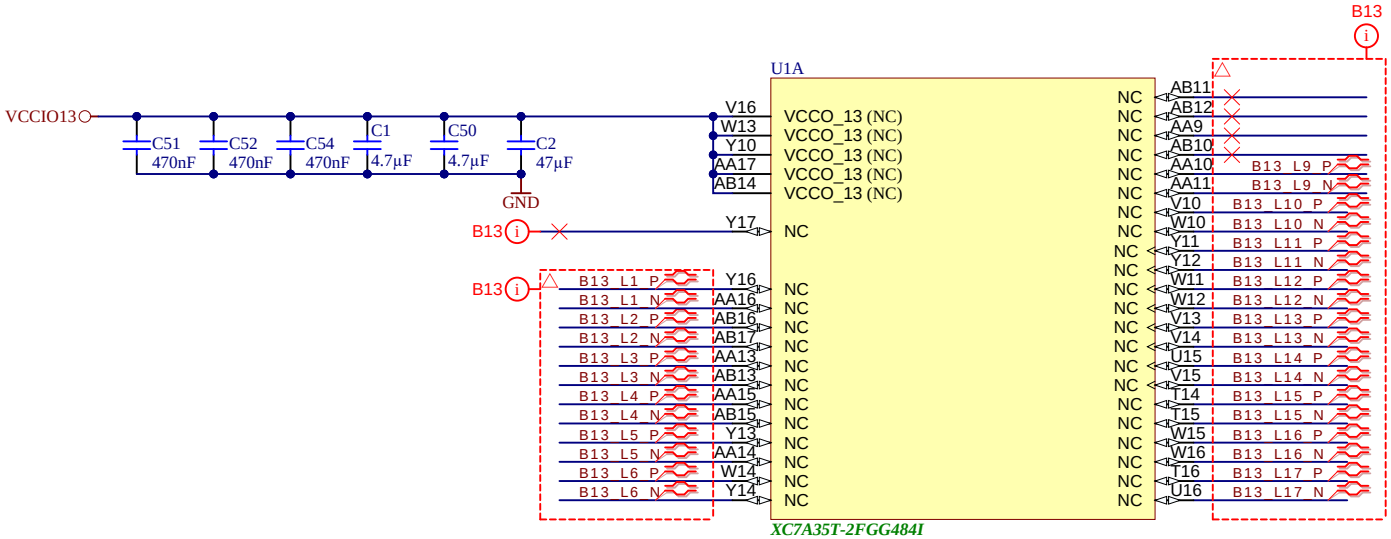

trenz electronic	Title: B13		
A4	Number: TE0712 42I36-A		Rev. 03
Date: 2015-12-09	Copyright: Trenz Electronic GmbH		Page7 of 20
	Filename: B13.SchDoc		

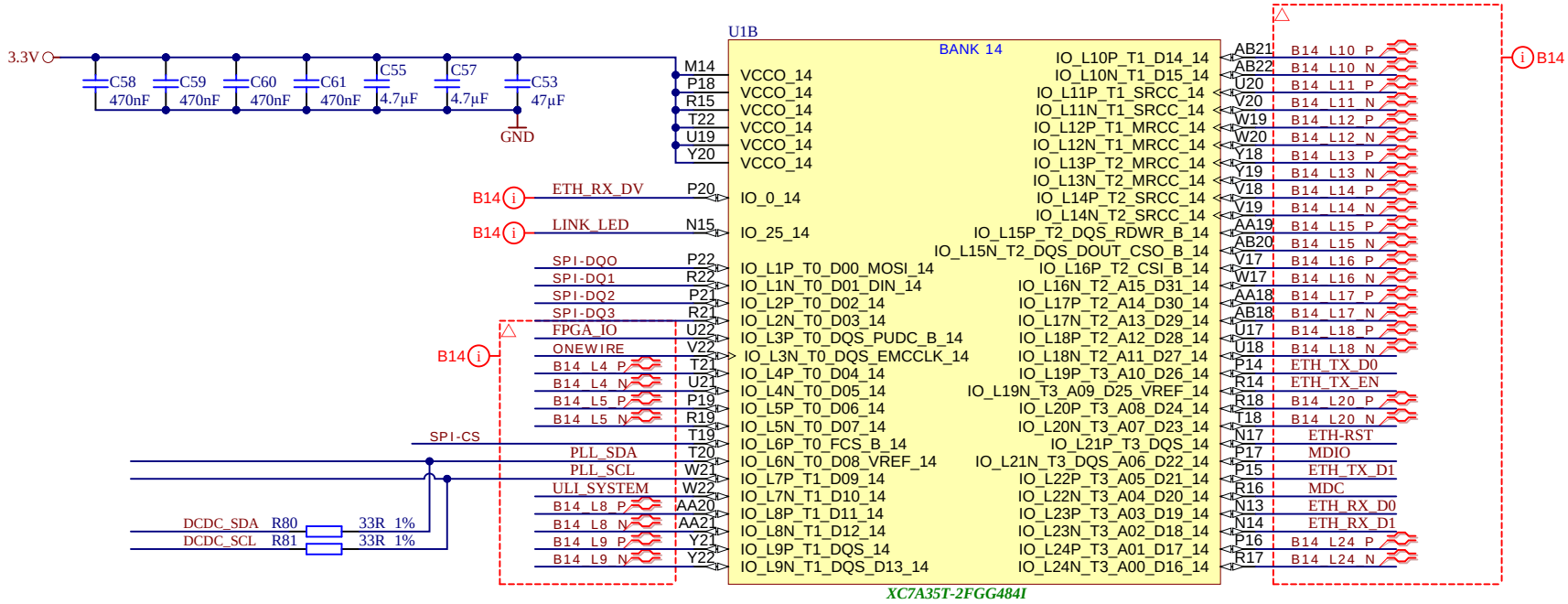

I2C bus addresses		
U1B	FPGA B14	h**
U2	Clock generator	h70
U14	DCDC VCCINT	h61

trenz electronic	Title: B14		
A4	Number: TE0712 42I36-A		Rev. 03
Date: 2015-12-09	Copyright: Trenz Electronic GmbH		Page8 of 20
Filename: B14.SchDoc			

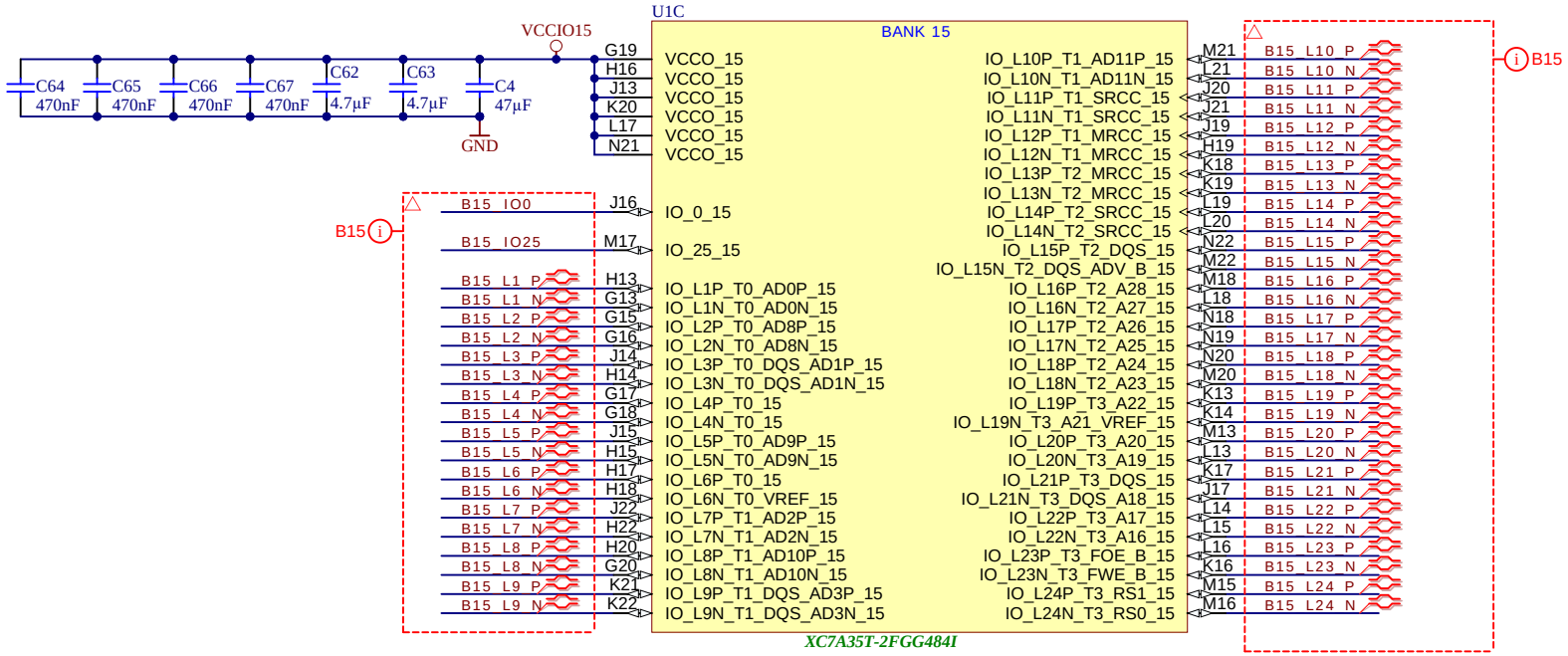

trenz electronic	Title: B15		
A4	Number: TE0712 42I36-A		Rev. 03
Date: 2015-12-09	Copyright: Trenz Electronic GmbH		Page9 of 20
	Filename: B15.SchDoc		

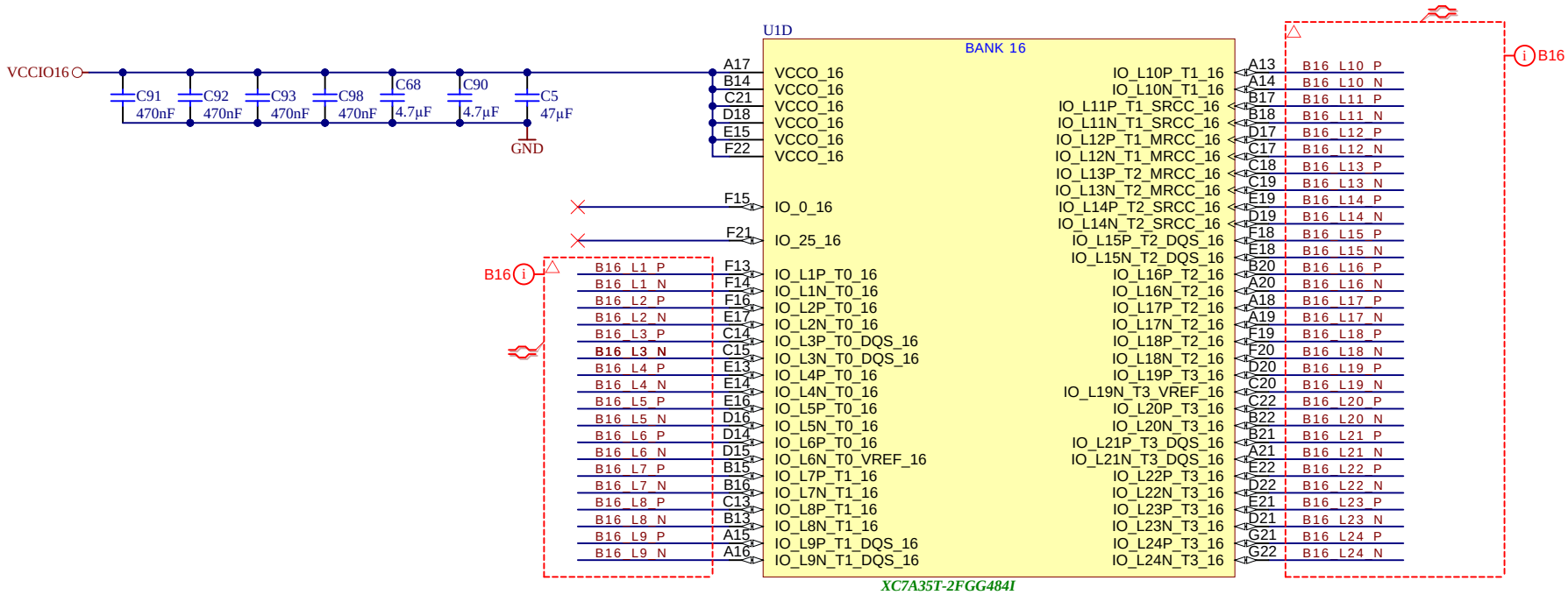

trenz electronic	Title: B16		
A4	Number: TE0712 42I36-A		Rev. 03
Date: 2015-12-09	Copyright: Trenz Electronic GmbH		Page10 of 20
	Filename: B16.SchDoc		

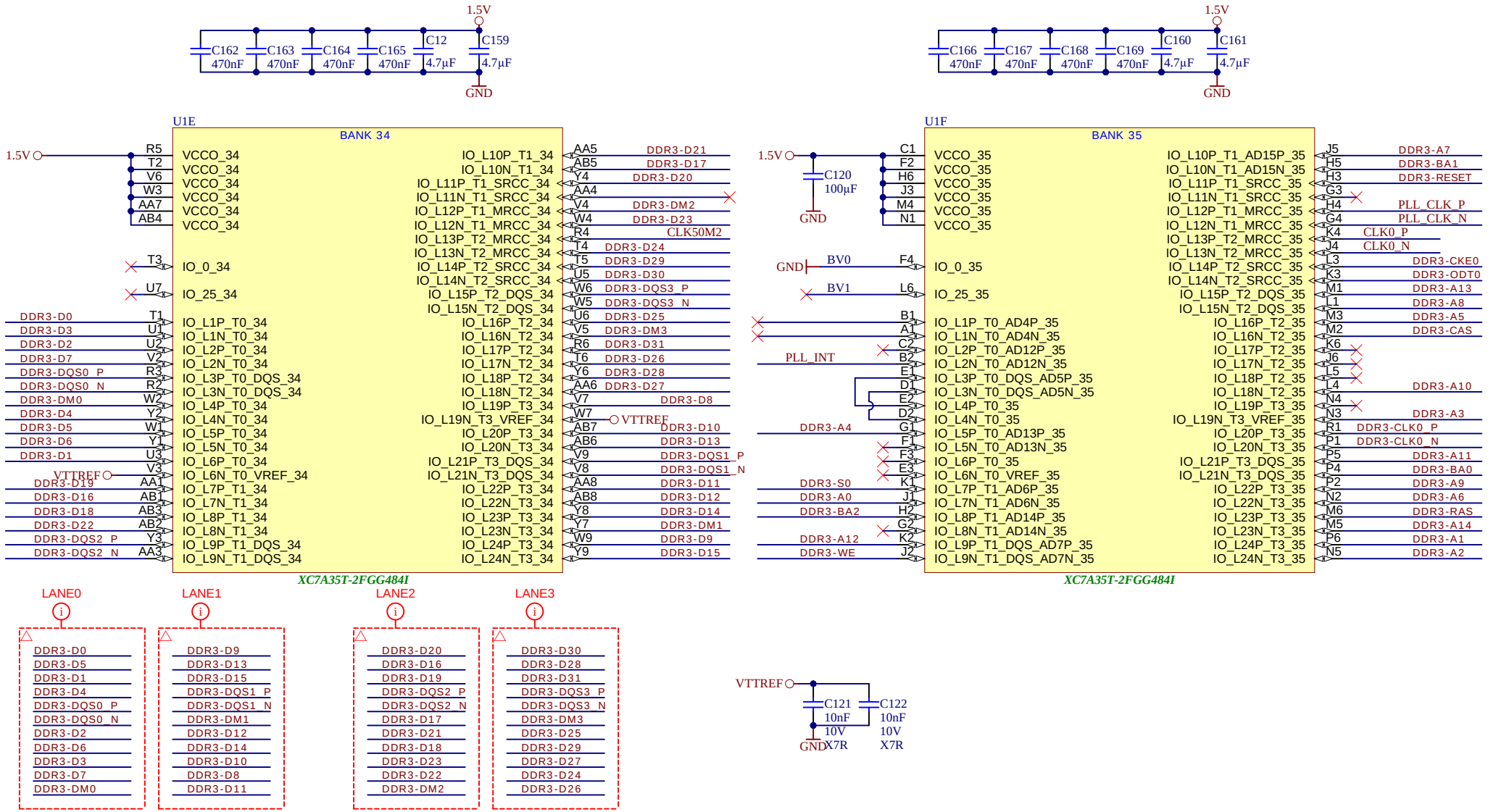

trenz electronic	Title: B34		
A4	Number: TE0712 42I36-A		Rev. 03
Date: 2015-12-09	Copyright: Trenz Electronic GmbH		Page11 of 20
Filename: B34.SchDoc			

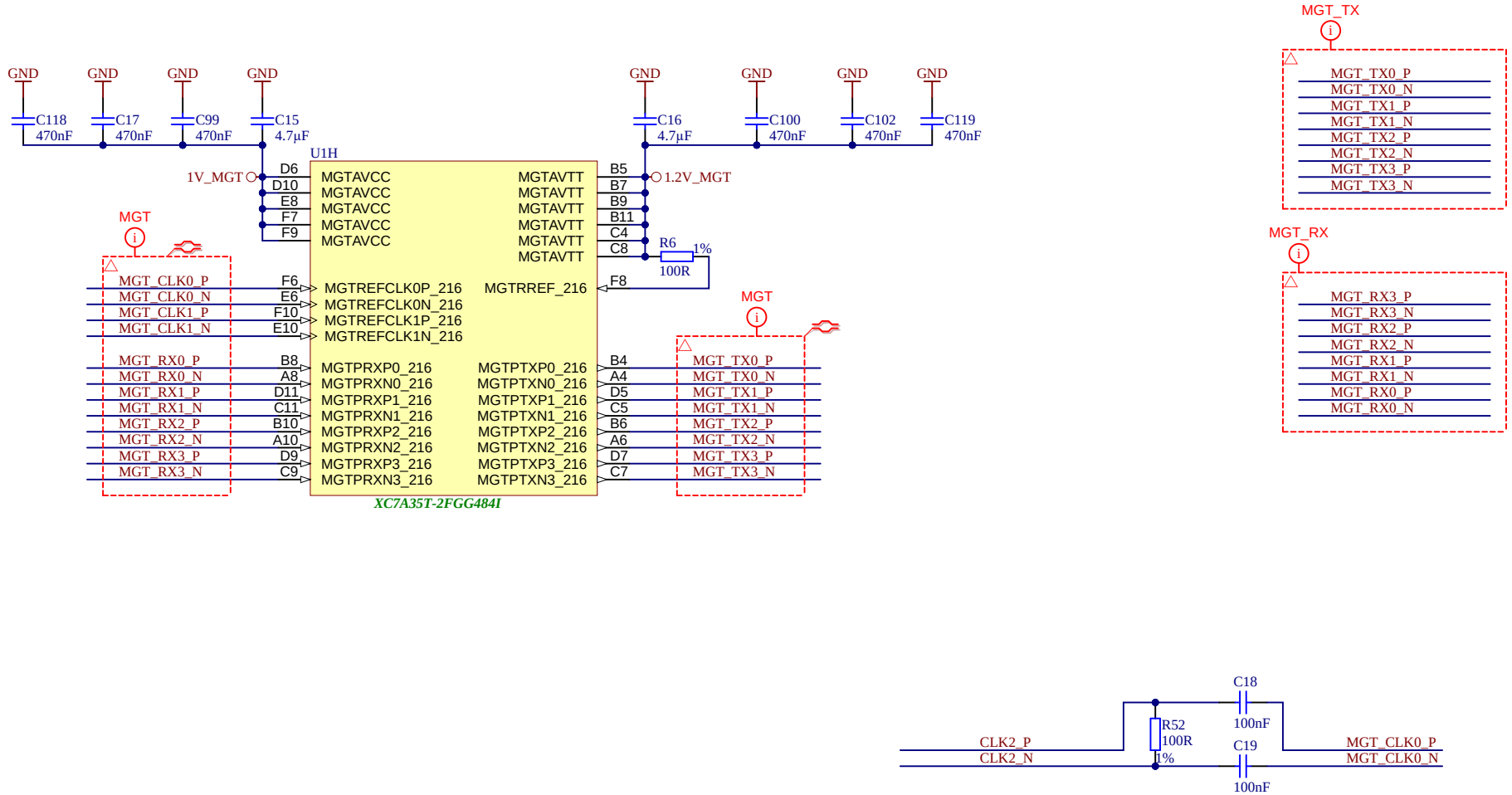

trenz electronic	Title: MGT		
A4	Number: TE0712 42I36-A		Rev. 03
Date: 2015-12-09	Copyright: Trenz Electronic GmbH		Page12 of 20
Filename: FPGA-MGT.SchDoc			

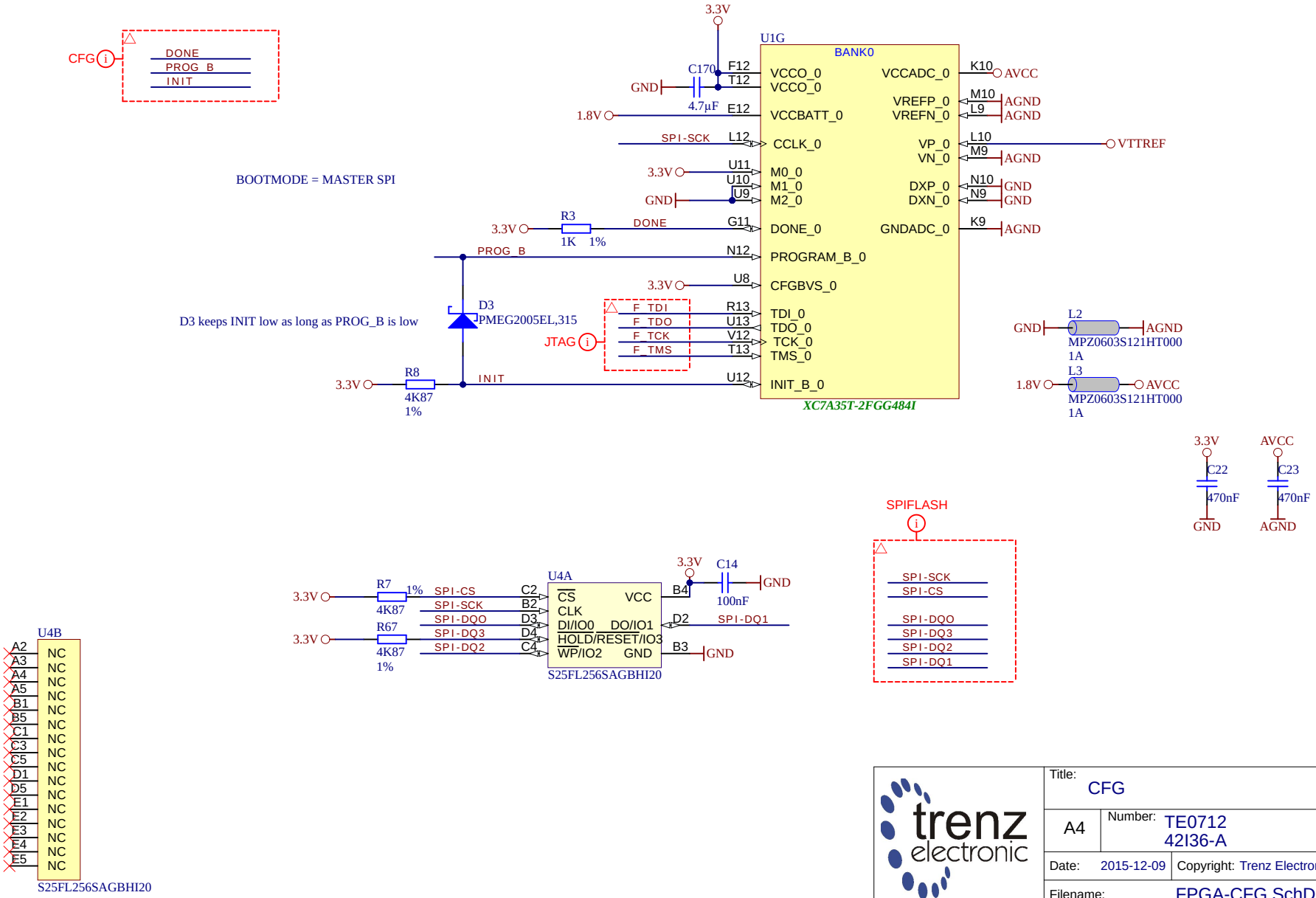

trenz electronic	Title: CFG		
A4	Number: TE0712 42I36-A		Rev. 03
Date: 2015-12-09	Copyright: Trenz Electronic GmbH		Page13 of 20
Filename: FPGA-CFG.SchDoc			

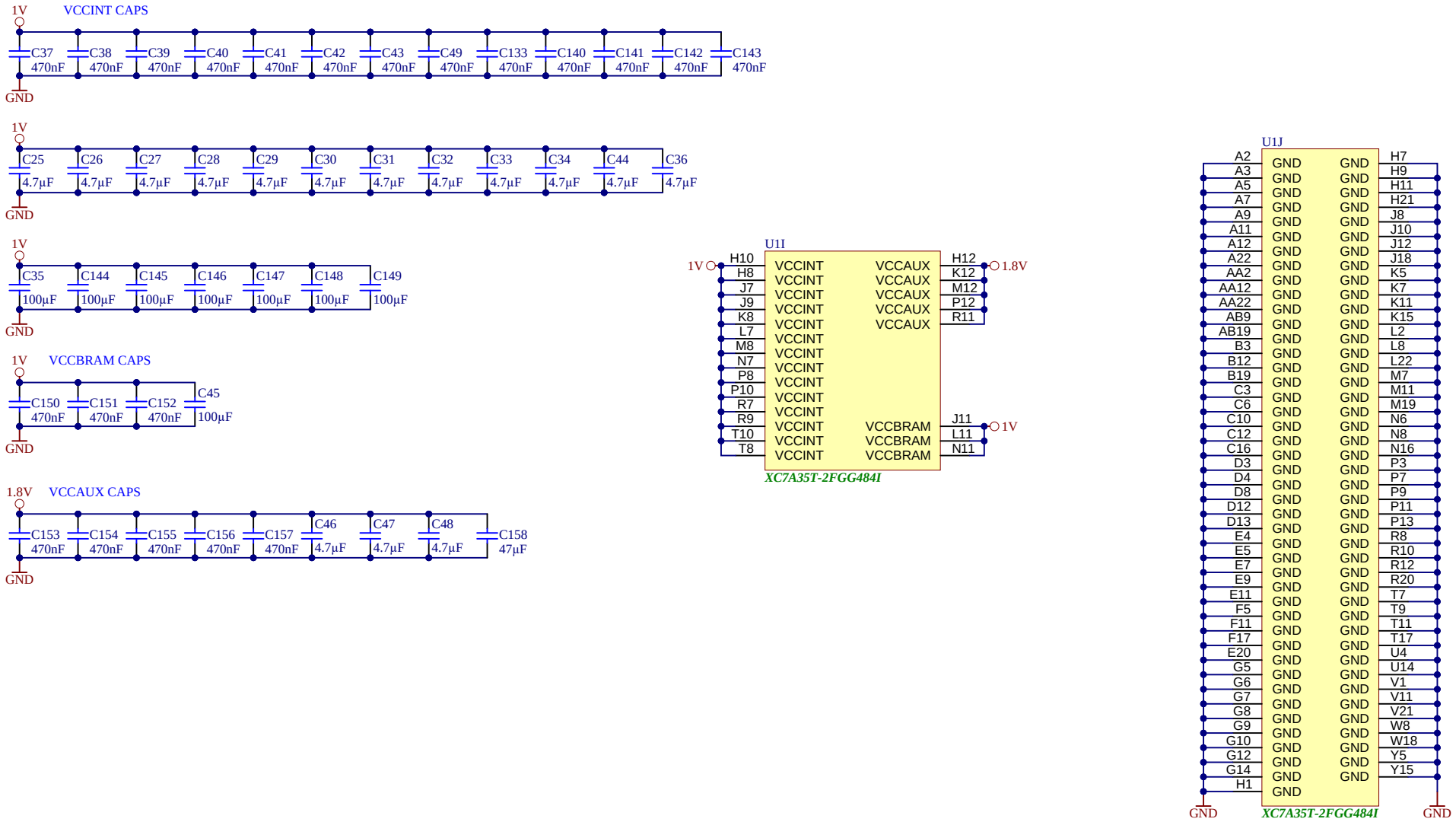

trenz electronic	Title: PWR		
A4	Number: TE0712 42I36-A		Rev. 03
Date: 2015-12-09	Copyright: Trenz Electronic GmbH		Page14 of 20
Filename: FPGA-PWR.SchDoc			

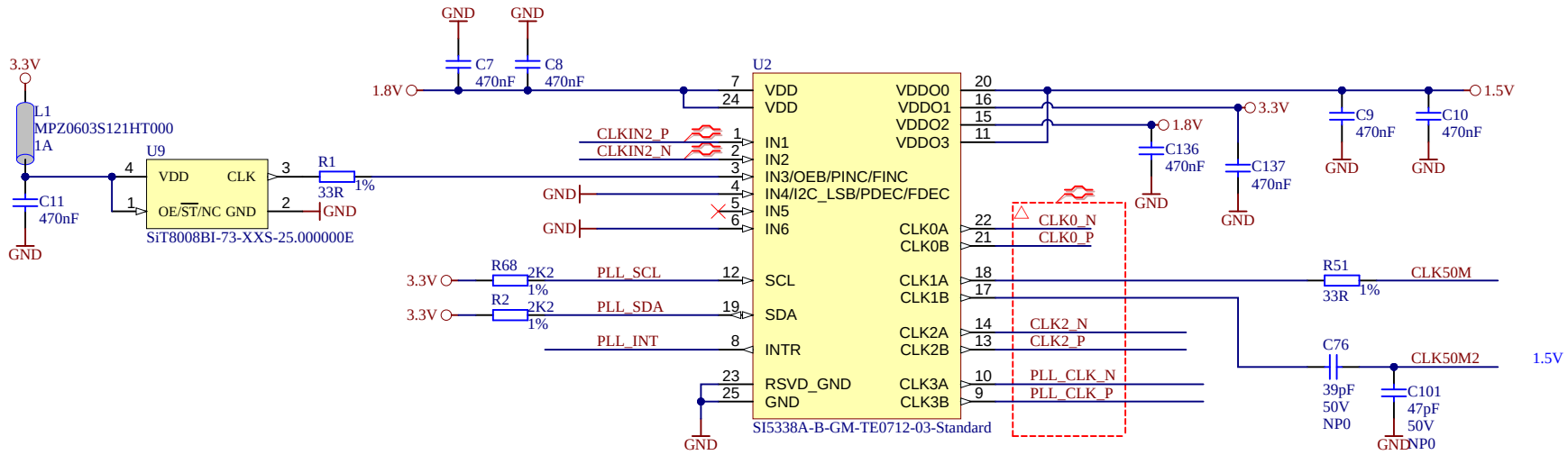

Datasheet Si5338:

IN1/IN2

These pins are used as the main differential clock input or as the XTAL input. See "3.2. Input Stage" on page 19, Figure 3 and Figure 4, for connection details. Clock inputs to these pins must be ac-coupled. Keep the traces from pins 1,2 to the crystal as short as possible and keep other signals and radiating sources away from the crystal.
When not in use, leave IN1 unconnected and IN2 connected to GND.

trenz electronic	Title: Clock		
A4	Number: TE0712 42I36-A		Rev. 03
Date: 2015-12-09	Copyright: Trenz Electronic GmbH		Page15 of 20
Filename: Clock.SchDoc			

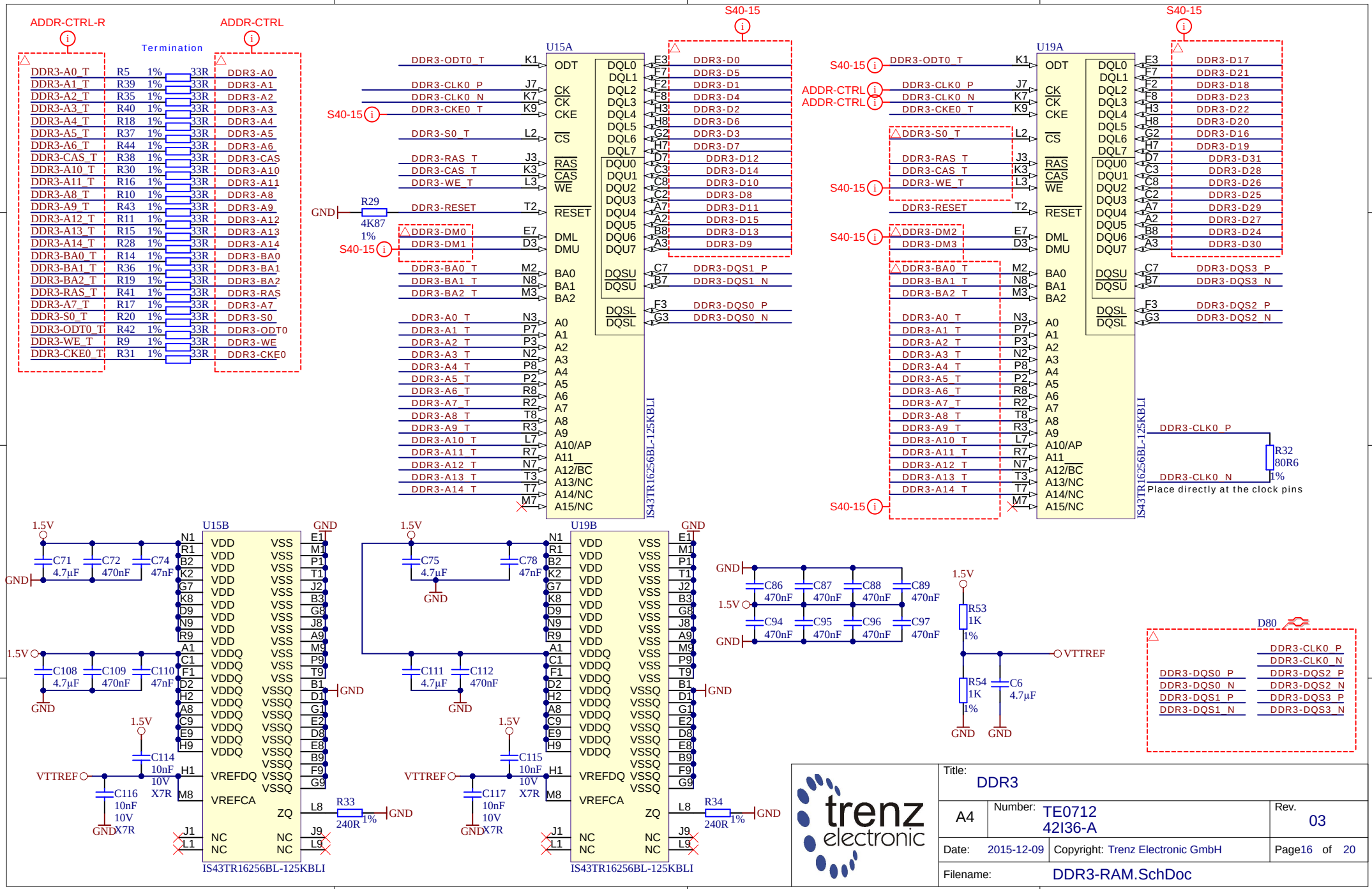
ADDR-CTRL-R
ADDR-CTRL
Termination
DDR3-A0_T R5 1% 33R DDR3-A0
DDR3-A1_T R39 1% 33R DDR3-A1
DDR3-A2_T R35 1% 33R DDR3-A2
DDR3-A3_T R40 1% 33R DDR3-A3
DDR3-A4_T R18 1% 33R DDR3-A4
DDR3-A5_T R37 1% 33R DDR3-A5
DDR3-A6_T R44 1% 33R DDR3-A6
DDR3-CAS_T R38 1% 33R DDR3-CAS
DDR3-A10_T R30 1% 33R DDR3-A10
DDR3-A11_T R16 1% 33R DDR3-A11
DDR3-A8_T R10 1% 33R DDR3-A8
DDR3-A9_T R43 1% 33R DDR3-A9
DDR3-A12_T R11 1% 33R DDR3-A12
DDR3-A13_T R15 1% 33R DDR3-A13
DDR3-A14_T R28 1% 33R DDR3-A14
DDR3-BA0_T R14 1% 33R DDR3-BA0
DDR3-BA1_T R36 1% 33R DDR3-BA1
DDR3-BA2_T R19 1% 33R DDR3-BA2
DDR3-RAS_T R41 1% 33R DDR3-RAS
DDR3-A7_T R17 1% 33R DDR3-A7
DDR3-S0_T R20 1% 33R DDR3-S0
DDR3-ODT0_T R42 1% 33R DDR3-ODT0
DDR3-WE_T R9 1% 33R DDR3-WE
DDR3-CKE0_T R31 1% 33R DDR3-CKE0
S40-15
U15A
U19A
R29 4K87 1%
GND
ADDR-CTRL
IS43TR16256BL-125KBLI
R32 80R6 1%
Place directly at the clock pins
U15B
U19B
1.5V
C71 4.7µF
C72 470nF
C74 47nF
C108 4.7µF
C109 470nF
C110 47nF
C114 10nF 10V X7R
C116 10nF 10V X7R
VTTREF
R33 240R 1%
C75 4.7µF
C78 47nF
C111 4.7µF
C112 470nF
C115 10nF 10V X7R
C117 10nF 10V X7R
R34 240R 1%
C86 470nF
C87 470nF
C88 470nF
C89 470nF
C94 470nF
C95 470nF
C96 470nF
C97 470nF
R53 1K 1%
R54 1K 1%
C6 4.7µF
D80
DDR3-CLK0_P
DDR3-CLK0_N
DDR3-DQS0_P
DDR3-DQS0_N
DDR3-DQS1_P
DDR3-DQS1_N
DDR3-DQS2_P
DDR3-DQS2_N
DDR3-DQS3_P
DDR3-DQS3_N
trenz electronic
Title: DDR3
A4
Number: TE0712 42I36-A
Rev. 03
Date: 2015-12-09
Copyright: Trenz Electronic GmbH
Page16 of 20
Filename: DDR3-RAM.SchDoc

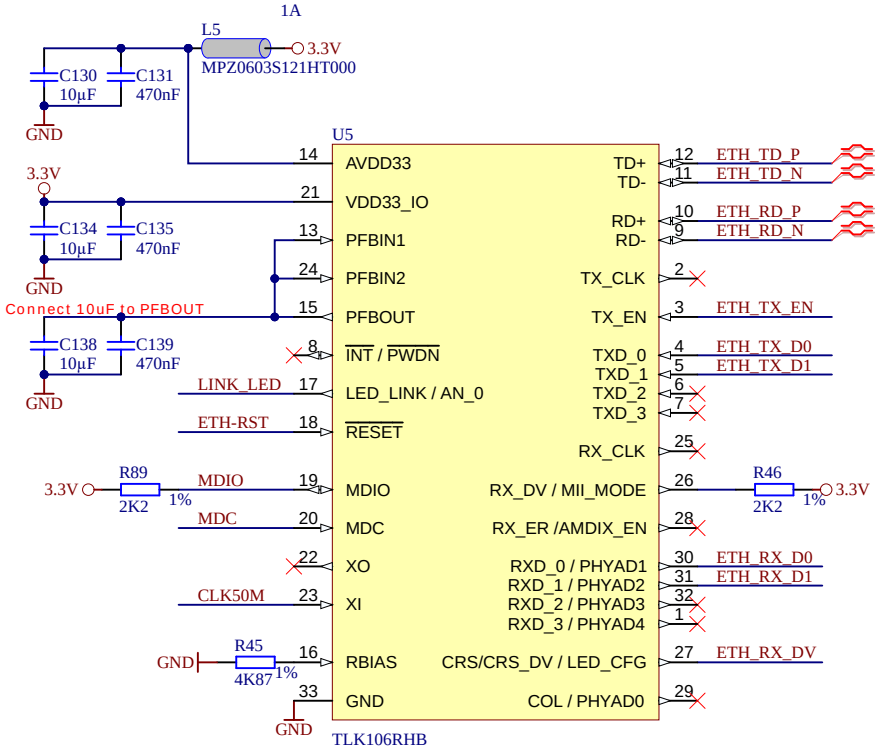

TLK106 is pin compatible with DP83822

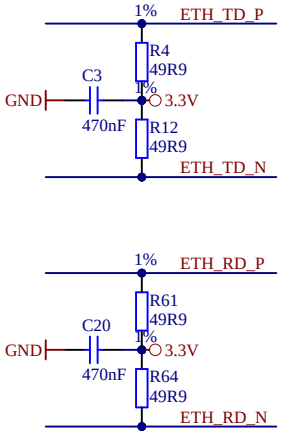

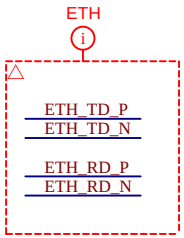

trenz electronic	Title: ETH		
A4	Number: TE0712 42I36-A		Rev. 03
Date: 2015-12-09	Copyright: Trenz Electronic GmbH		Page17 of 20
Filename: ETHERNET.SchDoc			

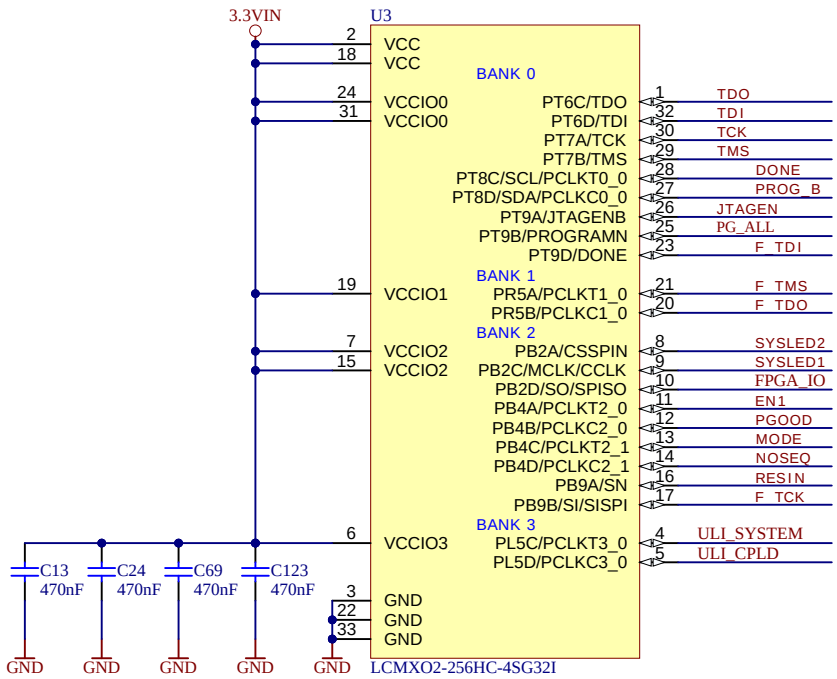

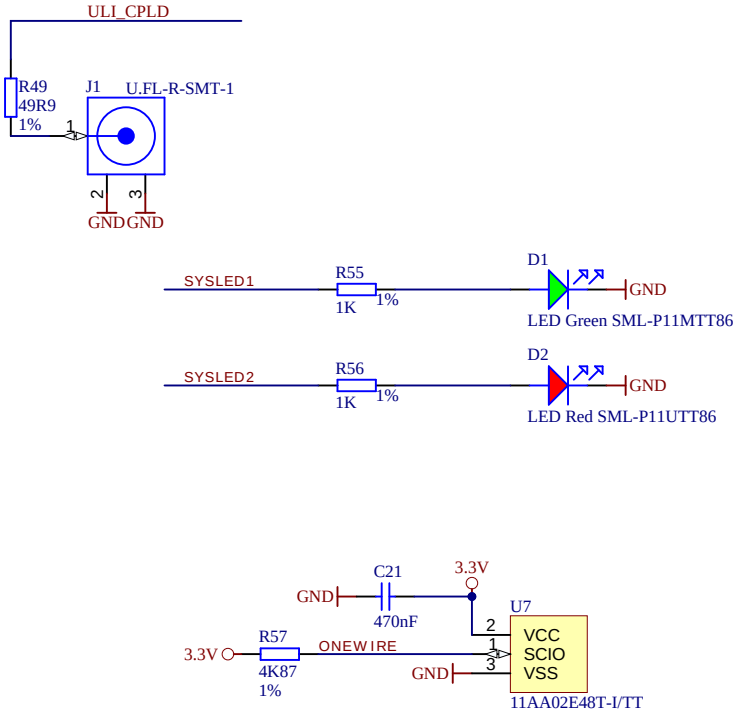

trenz electronic	Title: CPLD		
A4	Number: TE0712 42I36-A		Rev. 03
Date: 2015-12-09	Copyright: Trenz Electronic GmbH		Page18 of 20
	Filename: CPLD.SchDoc		

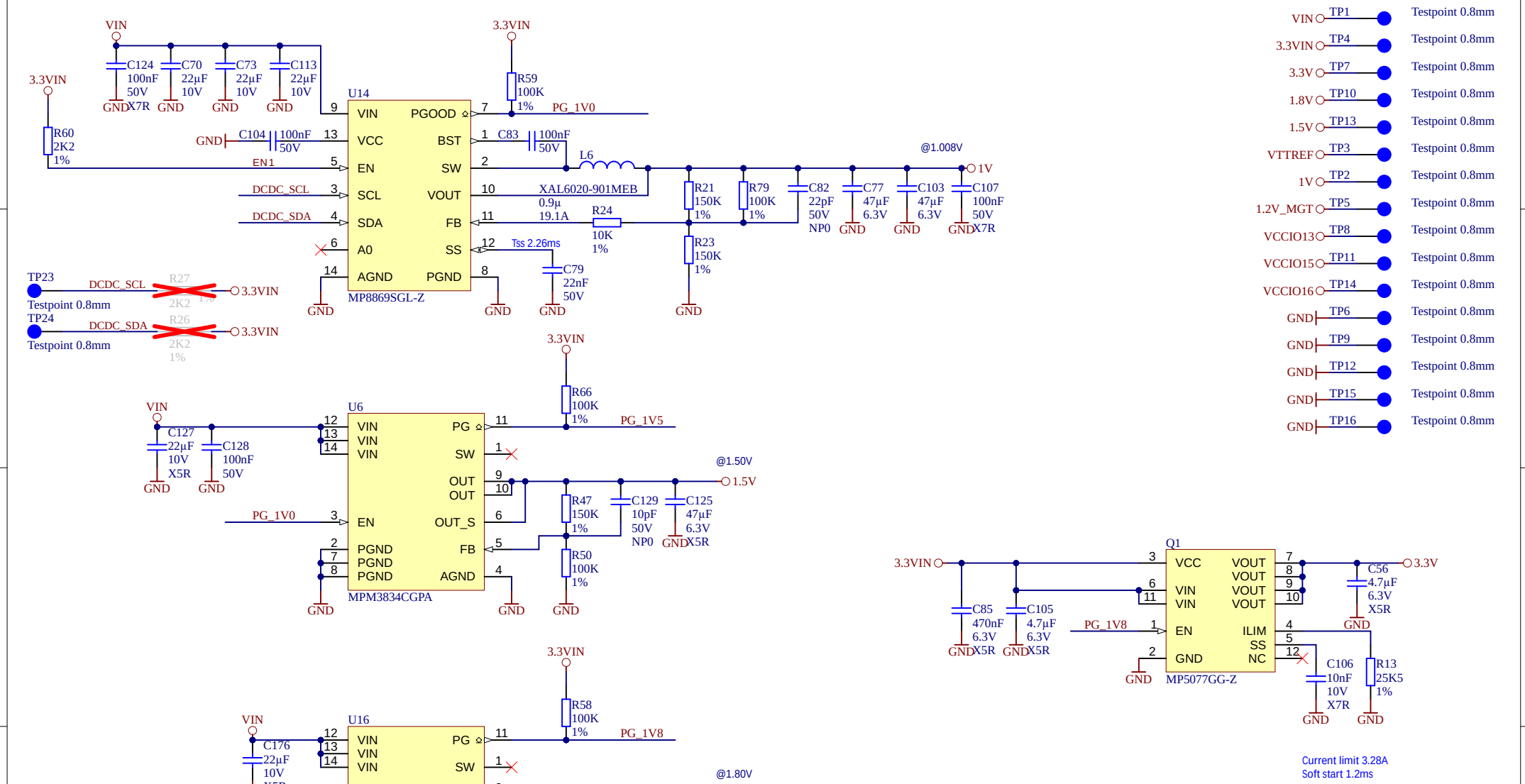

trenz electronic	Title: PWR		
A4	Number: TE0712 42I36-A		Rev. 03
Date: 2015-12-09	Copyright: Trenz Electronic GmbH		Page19 of 20
Filename: PWR1.SchDoc			

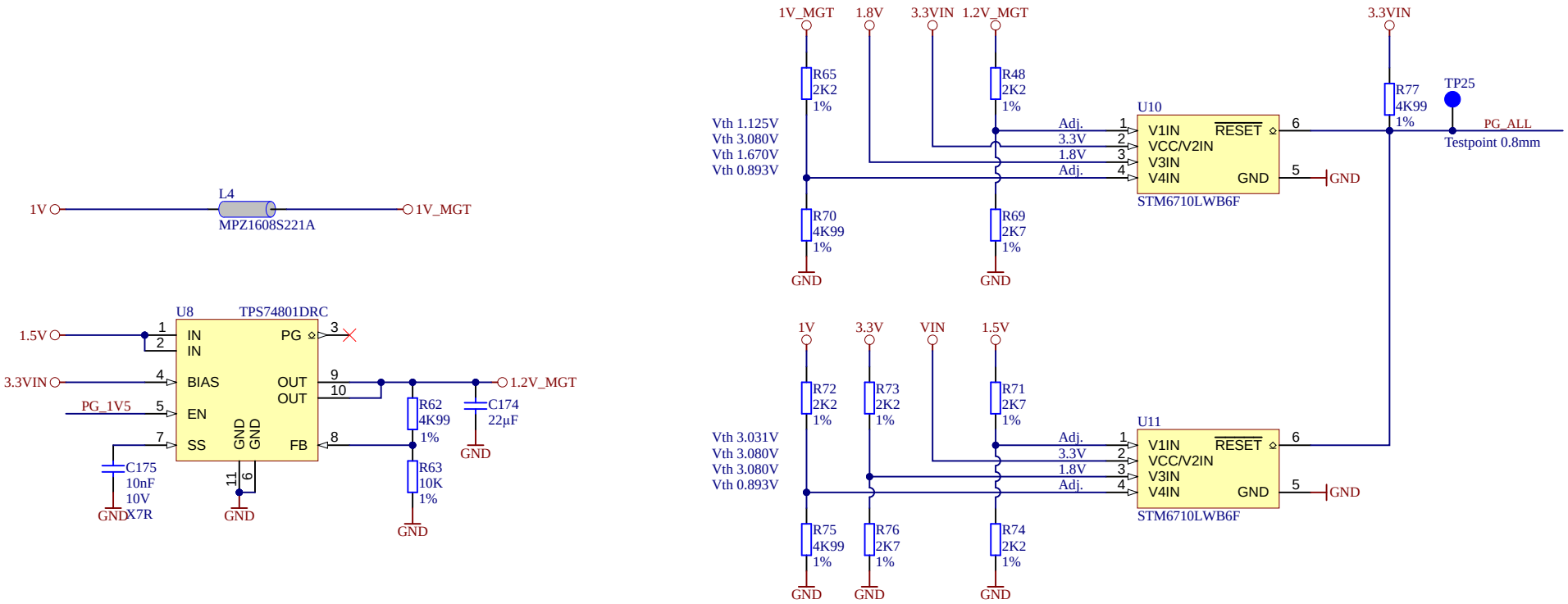

trenz electronic	Title: PWR		
A4	Number: TE0712 42I36-A		Rev. 03
Date: 2015-12-09	Copyright: Trenz Electronic GmbH		Page20 of 20
Filename: PWR2.SchDoc			